UNITED STATES PATENT AND TRADEMARK OFFICE

Commissioner for Patents
United States Patent and Trademark Office
P.O. Box 1450
Alexandria, VA 22313-1450
www.uspto.gov

PAUL, HASTING, JANOFSKY & WALKER LLP
875 15TH STREET, NW
WASHINGTON DC 20005

MAILED

JAN 31 2011

OFFICE OF PETITIONS

In re Application of	:	
OLAF, et al	:	
Application No. 12/404,110	:	DECISION ON PETITION
Filed: March 13, 2009	:	TO WITHDRAW
Attorney Docket No. 38466.00008.CON	:	FROM RECORD
	:	

This is a decision on the Request to Withdraw as attorney or agent under 37 C.F.R. § 1.36(b) filed December 28, 2010.

The request is **NOT APPROVED**.

The Office will no longer approve requests from practitioners to withdraw from applications where the requesting practitioner is acting, or has acted, in a representative capacity pursuant to 37 CFR 1.34. In these situations, the practitioner is responsible for the correspondence the practitioner files in the application while acting in a representative capacity. As such, there is no need for the practitioner to obtain the Office's permission to withdraw from representation. However, practitioners acting in a representative capacity, like practitioners who have a power of attorney in the application, remain responsible for noncompliance with 37 CFR 1.56, as well as 37 CFR 10.18, with respect to documents they file.

A review of the file record indicates that Todd M. Schneider does not have power of attorney in this patent application. See 37 C.F.R. § 10.40. Accordingly, the request to withdraw under 37 C.F.R. § 1.36(b) is not applicable.

All future communications from the Office will continue to be directed to the above-identified address until otherwise properly notified.

Telephone inquires concerning this decision should be directed to the undersigned at 571-272-6735.

/Diane Goodwyn/
Diane Goodwyn
Petitions Examiner
Office of Petitions

cc: TODD M. SCHNEIDER
P.O. BOX 919092
SAN DIEGO CA 92191-9092

UNITED STATES PATENT AND TRADEMARK OFFICE

Commissioner for Patents
United States Patent and Trademark Office
P.O. Box 1450
Alexandria, VA 22313-1450
www.uspto.gov

PAUL, HASTINGS, JANOFSKY & WALKER LLP
875 15th Street, NW
Washington DC 20005

MAILED
DEC 30 2011
OFFICE OF PETITIONS

In re Application of

:

Reinhold, et al.

:

Application No. 12/404,110

: DECISION ON PETITION

Filed: March 13, 2009

Attorney Docket No. 38466.00008.CON

This is a decision on the petition under 37 CFR 1.137(b), filed December 14, 2011, to revive the above-identified application.

The petition is **GRANTED**.

The above-identified application became abandoned for failure to file a proper response to the final Office action mailed February 7, 2011. The final Office action set a shortened statutory period for reply of three months from its mailing date. A response was filed on May 9, 2011. An Advisory Action mailed June 15, 2011, advised that the response of May 9, 2011, failed to place the application in condition for allowance. No further responses were received and the application became abandoned on May 8, 2011.

The Request for Continued Examination filed December 14, 2011, is noted.

It is not apparent whether the person signing the statement of unintentional delay was in a position to have firsthand or direct knowledge of the facts and circumstances of the delay at issue. Nevertheless, such statement is being treated as having been made as the result of a reasonable inquiry into the facts and circumstances of such delay. See 37 CFR 10.18(b) and Changes to Patent Practice and Procedure; Final Rule Notice, 62 Fed. Reg. 53131, 53178 (October 10, 1997), 1203 Off. Gaz. Pat. Office 63, 103 (October 21, 1997). In the event that such an inquiry has not been made, petitioner must make such an inquiry. If such inquiry results in the discovery that it is not correct that the entire delay in filing the required reply from the due date for the reply until the filing of a grantable petition pursuant to 37 CFR 1.137(b) was unintentional, petitioner must notify the Office.

There is no indication that the person signing the instant petition was ever given a power of attorney or authorization of agent to prosecute the above-identified application. If the person signing the instant petition desires to receive future correspondence regarding this application,

the appropriate power of attorney or authorization of agent must be submitted. While a courtesy copy of this decision is being mailed to the person signing the instant petition, all future correspondence will be directed to the address of currently of record until such time as appropriate instructions are received to the contrary.

The application file is being forwarded to Technology Center 3700, GAU 3771 for further processing.

Telephone inquiries concerning this decision should be directed to the undersigned at (571) 272-3222.

/Kenya A. McLaughlin/

Kenya A. McLaughlin
Petitions Attorney
Office of Petitions

Cc:
Thomas J. Appledom
Honigman Miller Schwartz and Cohn, LLP
39400 Woodward Avenue
Suite 101
Bloomfield Hills, Michigan 48304-5151

UNITED STATES PATENT AND TRADEMARK OFFICE

Commissioner for Patents
United States Patent and Trademark Office
P.O. Box 1450
Alexandria, VA 22313-1450
www.uspto.gov

MAILED

MAR 28 2011

OFFICE OF PETITIONS

CASIMIR JONES, S.C.
2275 DEMING WAY, SUITE 310
MIDDLETON, WI 53562

In re Application of :
Jaime C. Reed et al :
Application No. 12/404,114 : DECISION ON PETITION
Filed: March 13, 2009 : TO WITHDRAW
Attorney Docket No. Monme-30358/US-2/ORD : FROM RECORD
:

This is a decision on the Request to Withdraw as attorney or agent of record under 37 C.F.R. § 1.36(b), filed February 17, 2011.

The request is **APPROVED**.

The request was signed by Tyler J. Sisk on behalf of the practitioners of record associated with Customer Number 72960.

Applicant is reminded that there is no attorney of record at this time.

All future correspondence will be directed to inventor Jaime C. Reed at the address indicated below.

Telephone inquiries concerning this decision should be directed to Irvin Dingle at (571) 272-3210.

Irvin Dingle
Petitions Examiner
Office of Petitions

cc: Jaime Reed
909 Perkins Drive
Mukwonago, WI 53149

UNITED STATES PATENT AND TRADEMARK OFFICE

UNITED STATES DEPARTMENT OF COMMERCE
United States Patent and Trademark Office
Address: COMMISSIONER FOR PATENTS
P.O. Box 1450
Alexandria, Virginia 22313-1450
www.uspto.gov

APPLICATION NUMBER	FILING OR 371(C) DATE	FIRST NAMED APPLICANT	ATTY. DOCKET NO./TITLE
12/404,114	03/13/2009	Jaime C. Reed	MONME-30358/US-2/ORD

CONFIRMATION NO. 1074

72960
Casimir Jones, S.C.
2275 DEMING WAY, SUITE 310
MIDDLETON, WI 53562

POWER OF ATTORNEY NOTICE

OC000000046748302

Date Mailed: 03/28/2011

NOTICE REGARDING CHANGE OF POWER OF ATTORNEY

This is in response to the Power of Attorney filed 02/17/2011.

- The withdrawal as attorney in this application has been accepted. Future correspondence will be mailed to the new address of record. 37 CFR 1.33.

/idingle/

Office of Data Management, Application Assistance Unit (571) 272-4000, or (571) 272-4200, or 1-888-786-0101

UNITED STATES PATENT AND TRADEMARK OFFICE

UNITED STATES DEPARTMENT OF COMMERCE
United States Patent and Trademark Office
Address: COMMISSIONER FOR PATENTS
P.O. Box 1450
Alexandria, Virginia 22313-1450
www.uspto.gov

APPLICATION NUMBER	FILING OR 371(C) DATE	FIRST NAMED APPLICANT	ATTY. DOCKET NO./TITLE
12/404,114	03/13/2009	Jaime C. Reed	MONME-30358/US-2/ORD

CONFIRMATION NO. 1074

Jaime Reed
909 Perkins Drive
Mukwonago, WI 53149

POA ACCEPTANCE LETTER

OC00000046748303

Date Mailed: 03/28/2011

NOTICE OF ACCEPTANCE OF POWER OF ATTORNEY

This is in response to the Power of Attorney filed 02/17/2011.

The Power of Attorney in this application is accepted. Correspondence in this application will be mailed to the above address as provided by 37 CFR 1.33.

/idingle/

Office of Data Management, Application Assistance Unit (571) 272-4000, or (571) 272-4200, or 1-888-786-0101

UNITED STATES PATENT AND TRADEMARK OFFICE

Commissioner for Patents
United States Patent and Trademark Office
P.O. Box 1450
Alexandria, VA 22313-1450
www.uspto.gov

MAILED Paper No.

FEB 23 2011

OFFICE OF PETITIONS

HONEYWELL/FOX ROTHSCHILD
Patent Services
101 Columbia Road
Morristown NJ 07962

In re Application of	:	
Merkel et al.	:	
Application No. 12/404,130	:	DECISION ON PETITION
Filed: March 13, 2009	:	PURSUANT TO 37 C.F.R.
Attorney Docket No. H0019047 - 4511	:	§§ 1.78(a)(3) AND (a)(6)
	:	

This is a decision on the petition under 37 CFR §§ 1.78(a)(3) and 1.78(a)(6), filed on January 4, 2011, to accept an unintentionally delayed claim under 35 U.S.C. §§ 120 and 119(e) for the benefit of priority to both a prior-filed provisional application and a prior-filed non-provisional application, set forth in an amendment to the specification that was submitted concurrently with this petition.

The petition is **DISMISSED**.

A petition for acceptance of a claim for late priority under 37 CFR §§ 1.78(a)(3) and 1.78(a)(6) is only applicable to those applications filed on or after November 29, 2000 and after the expiration of the period specified in 37 CFR §§ 1.78(a)(2)(ii) and 1.78(a)(5)(ii). In addition, the petition under 37 CFR §§ 1.78(a)(3) and 1.78(a)(6) must be accompanied by:

(1) the reference required by 35 U.S.C. §§ 120 and 119(e) and 37 CFR §§ 1.78(a)(2)(i) and 1.78(a)(5)(i) of the prior-filed applications, unless previously submitted;
(2) the surcharge set forth in § 1.17(t); and
(3) a statement that the entire delay between the date the claim was due under 37 CFR §§ 1.78(a)(2)(ii) and 1.78(a)(5)(ii) and the date the claim was filed was unintentional. The Director may require additional information where there is a question whether the delay was unintentional.

37 C.F.R. § 1.78(a)(3)(iii) requires a statement that the entire delay between the date the claim was due under paragraph (a)(2)(ii) of 37 C.F.R. § 1.78 and the date the claim was filed was unintentional. 37 C.F.R. § 1.78(a)(6)(iii) requires a statement that the entire delay between the date the claim was due under paragraph (a)(5)(ii) of this section and the date the claim was filed was unintentional.

Since the statement contained in this petition varies from the language required by 37 C.F.R. §§ 1.78(a)(3)(iii) and 1.78(a)(6)(iii), the statement is being construed as the statements required by 37 C.F.R. §§ 1.78(a)(3)(iii) and 1.78(a)(6)(iii), and Petitioner must notify the Office if this is not a correct interpretation of the statement.

With this petition, Petitioner has included the surcharge and a statement that is being construed as the statements required by 37 C.F.R. §§ 1.78(a)(3)(iii) and 1.78(a)(6)(iii). As such, requirements (2) and (3) have been satisfied.

The petition does not comply with item (1).

The amendment to the specification is not acceptable as drafted since it improperly incorporates by reference prior-filed provisional application no. 61/038,327 and prior-filed non-provisional application no. 11/619,592. An incorporation by reference statement added after an application's filing date is not effective because no new matter can be added to an application after its filing date (see 35 U.S.C. § 132(a)). If an incorporation by reference statement is included in an amendment to the specification to add a benefit claim under 35 U.S.C. §§ 119(e) or 120 after the filing date of the application, the amendment would not be proper. When a benefit claim under 35 U.S.C. §§ 119(e) or 120 is submitted after the filing of an application, the reference to the prior application cannot include an incorporation by reference statement of the prior application. *See* Dart Industries v. Banner, 636 F.2d 684, 207 USPQ 273 (C.A.D.C. 1980). *Note* MPEP §§ 201.06(c) and 608.04(b).

Any reply should include a cover letter entitled "Renewed Petition pursuant to 37 C.F.R. §§ 1.78(a)(3) and (a)(6)," and **should include an amendment to the specification that does not incorporate by reference prior-filed provisional application no. 61/038,327 and prior-filed non-provisional application no. 11/619,592.**

The renewed petition should indicate in a prominent manner that the attorney handling this matter is Paul Shanoski, and may be submitted by mail,[1] hand-delivery,[2] or facsimile.[3] Registered users of EFS-Web may alternatively submit a response to this decision via EFS-Web.[4]

If responding by mail, Petitioner is advised not to place the undersigned's name on the envelope. Only the information that appears in the footnote should be included - adding anything else to the address will delay the delivery of the response to the deciding official.

Telephone inquiries regarding this decision should be directed to Senior Attorney Paul Shanoski at (571) 272-3225.[5]

Anthony Knight
Director
Office of Petitions

---

[1] Mail Stop Petition, Commissioner for Patents, United States Patent and Trademark Office, P.O. Box 1450, Alexandria, VA, 22313-1450.
2 Customer Window, Randolph Building, 401 Dulaney Street, Alexandria, VA, 22314.
[3] (571) 273-8300: please note this is a central facsimile number.
[4] https://sportal.uspto.gov/authenticate/authenticateuserlocalepf.html
[5] Petitioner will note that all practice before the Office should be in writing, and the action of the Office will be based exclusively on the written record in the Office. See 37 C.F.R. § 1.2. As such, Petitioner is reminded that no telephone discussion may be controlling or considered authority for any further action(s) of Petitioner.

UNITED STATES PATENT AND TRADEMARK OFFICE

Commissioner for Patents
United States Patent and Trademark Office
P.O. Box 1450
Alexandria, VA 22313-1450
www.uspto.gov

Paper No.

HONEYWELL/FOX ROTHSCHILD
Patent Services
101 Columbia Road
Morristown NJ 07962

MAILED
MAY 19 2011
OFFICE OF PETITIONS

In re Application of	:
Merkel et al.	:
Application No. 12/404,130	: DECISION ON PETITION
Filed: March 13, 2009	: PURSUANT TO 37 C.F.R.
Attorney Docket No. H0019047 - 4511	: §§ 1.78(a)(3) AND (a)(6)
	:

This is a decision on the renewed petition under 37 CFR §§ 1.78(a)(3) and 1.78(a)(6), filed on March 4, 2011, to accept an unintentionally delayed claim under 35 U.S.C. §§ 120 and 119(e) for the benefit of priority to both a prior-filed provisional application and a prior-filed non-provisional application, set forth in an amendment to the specification that was submitted concurrently with this renewed petition. A supplement to this renewed petition was filed on May 2, 2011.

The renewed petition is **GRANTED**.

A petition for acceptance of a claim for late priority under 37 CFR §§ 1.78(a)(3) and 1.78(a)(6) is only applicable to those applications filed on or after November 29, 2000 and after the expiration of the period specified in 37 CFR §§ 1.78(a)(2)(ii) and 1.78(a)(5)(ii). In addition, the petition under 37 CFR §§ 1.78(a)(3) and 1.78(a)(6) must be accompanied by:

(1) the reference required by 35 U.S.C. §§ 120 and 119(e) and 37 CFR §§ 1.78(a)(2)(i) and 1.78(a)(5)(i) of the prior-filed applications, unless previously submitted;
(2) the surcharge set forth in § 1.17(t); and
(3) a statement that the entire delay between the date the claim was due under 37 CFR §§ 1.78(a)(2)(ii) and

> 1.78(a)(5)(ii) and the date the claim was filed was unintentional. The Director may require additional information where there is a question whether the delay was unintentional.

37 C.F.R. § 1.78(a)(3)(iii) requires a statement that the entire delay between the date the claim was due under paragraph (a)(2)(ii) of 37 C.F.R. § 1.78 and the date the claim was filed was unintentional. 37 C.F.R. § 1.78(a)(6)(iii) requires a statement that the entire delay between the date the claim was due under paragraph (a)(5)(ii) of this section and the date the claim was filed was unintentional.

Since the statements contained in the original petition, the renewed petition, and the supplement to the renewed petition vary from the language required by 37 C.F.R. §§ 1.78(a)(3)(iii) and 1.78(a)(6)(iii), the statements are being construed as the statements required by 37 C.F.R. §§ 1.78(a)(3)(iii) and 1.78(a)(6)(iii), and Petitioner must notify the Office if this is not a correct interpretation of the statements.

An original petition under 37 CFR §§ 1.78(a)(3) and 1.78(a)(6) was filed on January 4, 2011, along with the surcharge and a statement that is being construed as the statements required by 37 C.F.R. §§ 1.78(a)(3)(iii) and 1.78(a)(6)(iii). The original petition under 37 CFR §§ 1.78(a)(3) and 1.78(a)(6) was dismissed via the mailing of a decision on February 23, 2011, which indicated that the above requirements (2) and (3) had been satisfied, and that the first above requirement had not been satisfied as the concurrently submitted amendment to the specification is not acceptable as drafted since it improperly incorporates by reference prior-filed provisional application no. 61/038,327 and prior-filed non-provisional application no. 11/619,592.

With the supplement to this renewed petition, Petitioner has submitted an acceptable amendment. As such, the third above requirement has been satisfied.

All the above requirements having been satisfied, the late claim for benefit of priority under 35 U.S.C. §§ 120 and 119(e) is accepted as being unintentionally delayed.

The granting of the renewed petition to accept the delayed benefit claim to the prior-filed applications under 37 CFR

§§ 1.78(a)(3) and 1.78(a)(6) should not be construed as meaning that this application is entitled to the benefit of the filing date of the prior-filed applications. In order for this application to be entitled to the benefit of the prior-filed applications, all other requirements under 35 U.S.C. §§ 120 and 1.78(a)(1) and (a)(2) and under 35 U.S.C. § 119(e) and 37 CFR §§ 1.78(a)(4) and (a)(5) must be met. Similarly, the fact that the corrected Filing Receipt accompanying this decision on petition includes the prior-filed applications should not be construed as meaning that applicant is entitled to the claim for benefit of priority to the prior-filed applications noted thereon. Accordingly, the examiner will, in due course, consider this benefit claim and determine whether the application is entitled to the benefit of the earlier filing date.

A corrected Filing Receipt, which includes the priority claim to the prior-filed applications, accompanies this decision on petition.

The Technology Center will be notified of this decision, and jurisdiction over this application is transferred to the Technology Center, so that the application may receive further processing. The Technology Center's support staff will notify the Examiner of this decision, so that the present application can receive further processing in due course.

Telephone inquiries regarding *this decision* should be directed to Senior Attorney Paul Shanoski at (571) 272-3225.[1] All other inquiries concerning examination procedures or status of the application should be directed to the Technology Center.

Anthony Knight
Director
Office of Petitions

ATTACHMENT: Corrected Filing Receipt

[1] Petitioner will note that all practice before the Office should be in writing, and the action of the Office will be based exclusively on the written record in the Office. See 37 C.F.R. § 1.2. As such, Petitioner is reminded that no telephone discussion may be controlling or considered authority for Petitioner's further action(s).

UNITED STATES PATENT AND TRADEMARK OFFICE

UNITED STATES DEPARTMENT OF COMMERCE
United States Patent and Trademark Office
Address: COMMISSIONER FOR PATENTS
P.O. Box 1450
Alexandria, Virginia 22313-1450
www.uspto.gov

APPLICATION NUMBER	FILING or 371(c) DATE	GRP ART UNIT	FIL FEE REC'D	ATTY.DOCKET.NO	TOT CLAIMS	IND CLAIMS
12/404,130	03/13/2009	1621	1090	H0019047 - 4511	19	1

CONFIRMATION NO. 1105

CORRECTED FILING RECEIPT

91970
HONEYWELL/FOX ROTHSCHILD
Patent Services
101 Columbia Road
Morristown, NJ 07962

Date Mailed: 05/18/2011

Receipt is acknowledged of this non-provisional patent application. The application will be taken up for examination in due course. Applicant will be notified as to the results of the examination. Any correspondence concerning the application must include the following identification information: the U.S. APPLICATION NUMBER, FILING DATE, NAME OF APPLICANT, and TITLE OF INVENTION. Fees transmitted by check or draft are subject to collection. Please verify the accuracy of the data presented on this receipt. **If an error is noted on this Filing Receipt, please submit a written request for a Filing Receipt Correction. Please provide a copy of this Filing Receipt with the changes noted thereon. If you received a "Notice to File Missing Parts" for this application, please submit any corrections to this Filing Receipt with your reply to the Notice. When the USPTO processes the reply to the Notice, the USPTO will generate another Filing Receipt incorporating the requested corrections**

Applicant(s)

Daniel C. Merkel, West Seneca, NY;
Hsueh Sung Tung, Getzville, NY;
Konstantin A. Pokrovski, Orchard Park, NY;
Selma Bektesevic, Williamsville, NY;
Robert Johnson, Lancaster, NY;
Haiyou Wang, Amherst, NY;

Assignment For Published Patent Application

HONEYWELL INTERNATIONAL INC., Morristown, NJ

Power of Attorney: The patent practitioners associated with Customer Number 00128

Domestic Priority data as claimed by applicant

This appln claims benefit of 61/038,327 03/20/2008
and is a CIP of 11/619,592 01/03/2007
which claims benefit of 60/755,485 01/03/2006
and is a CIP of 11/118,504 04/29/2005 PAT 7,371,904
which claims benefit of 60/567,426 04/29/2004
and claims benefit of 60/567,429 04/29/2004
and said 11/619,592 01/03/2007
is a CIP of 11/118,503 04/29/2005 PAT 7,345,209
which claims benefit of 60/567,427 04/29/2004
and claims benefit of 60/567,425 04/29/2004
and said 11/619,592 01/03/2007
is a CIP of 11/118,530 04/29/2005 PAT 7,189,884
which claims benefit of 60/567,428 04/29/2004

Foreign Applications (You may be eligible to benefit from the **Patent Prosecution Highway** program at the USPTO. Please see http://www.uspto.gov for more information.)

If Required, Foreign Filing License Granted: 03/27/2009

The country code and number of your priority application, to be used for filing abroad under the Paris Convention, is **US 12/404,130**

Projected Publication Date: Not Applicable

Non-Publication Request: No

Early Publication Request: No

Title

INTEGRATED PROCESS TO PRODUCE 2,3,3,3-TETRAFLUOROPROPENE

Preliminary Class

570

PROTECTING YOUR INVENTION OUTSIDE THE UNITED STATES

Since the rights granted by a U.S. patent extend only throughout the territory of the United States and have no effect in a foreign country, an inventor who wishes patent protection in another country must apply for a patent in a specific country or in regional patent offices. Applicants may wish to consider the filing of an international application under the Patent Cooperation Treaty (PCT). An international (PCT) application generally has the same effect as a regular national patent application in each PCT-member country. The PCT process **simplifies** the filing of patent applications on the same invention in member countries, but **does not result** in a grant of "an international patent" and does not eliminate the need of applicants to file additional documents and fees in countries where patent protection is desired.

Almost every country has its own patent law, and a person desiring a patent in a particular country must make an application for patent in that country in accordance with its particular laws. Since the laws of many countries differ in various respects from the patent law of the United States, applicants are advised to seek guidance from specific foreign countries to ensure that patent rights are not lost prematurely.

Applicants also are advised that in the case of inventions made in the United States, the Director of the USPTO must issue a license before applicants can apply for a patent in a foreign country. The filing of a U.S. patent application serves as a request for a foreign filing license. The application's filing receipt contains further information and guidance as to the status of applicant's license for foreign filing.

Applicants may wish to consult the USPTO booklet, "General Information Concerning Patents" (specifically, the section entitled "Treaties and Foreign Patents") for more information on timeframes and deadlines for filing foreign patent applications. The guide is available either by contacting the USPTO Contact Center at 800-786-9199, or it can be viewed on the USPTO website at http://www.uspto.gov/web/offices/pac/doc/general/index.html.

For information on preventing theft of your intellectual property (patents, trademarks and copyrights), you may wish to consult the U.S. Government website, http://www.stopfakes.gov. Part of a Department of Commerce initiative, this website includes self-help "toolkits" giving innovators guidance on how to protect intellectual property in specific

countries such as China, Korea and Mexico. For questions regarding patent enforcement issues, applicants may call the U.S. Government hotline at 1-866-999-HALT (1-866-999-4158).

LICENSE FOR FOREIGN FILING UNDER

Title 35, United States Code, Section 184

Title 37, Code of Federal Regulations, 5.11 & 5.15

GRANTED

The applicant has been granted a license under 35 U.S.C. 184, if the phrase "IF REQUIRED, FOREIGN FILING LICENSE GRANTED" followed by a date appears on this form. Such licenses are issued in all applications where the conditions for issuance of a license have been met, regardless of whether or not a license may be required as set forth in 37 CFR 5.15. The scope and limitations of this license are set forth in 37 CFR 5.15(a) unless an earlier license has been issued under 37 CFR 5.15(b). The license is subject to revocation upon written notification. The date indicated is the effective date of the license, unless an earlier license of similar scope has been granted under 37 CFR 5.13 or 5.14.

This license is to be retained by the licensee and may be used at any time on or after the effective date thereof unless it is revoked. This license is automatically transferred to any related applications(s) filed under 37 CFR 1.53(d). This license is not retroactive.

The grant of a license does not in any way lessen the responsibility of a licensee for the security of the subject matter as imposed by any Government contract or the provisions of existing laws relating to espionage and the national security or the export of technical data. Licensees should apprise themselves of current regulations especially with respect to certain countries, of other agencies, particularly the Office of Defense Trade Controls, Department of State (with respect to Arms, Munitions and Implements of War (22 CFR 121-128)); the Bureau of Industry and Security, Department of Commerce (15 CFR parts 730-774); the Office of Foreign AssetsControl, Department of Treasury (31 CFR Parts 500+) and the Department of Energy.

NOT GRANTED

No license under 35 U.S.C. 184 has been granted at this time, if the phrase "IF REQUIRED, FOREIGN FILING LICENSE GRANTED" DOES NOT appear on this form. Applicant may still petition for a license under 37 CFR 5.12, if a license is desired before the expiration of 6 months from the filing date of the application. If 6 months has lapsed from the filing date of this application and the licensee has not received any indication of a secrecy order under 35 U.S.C. 181, the licensee may foreign file the application pursuant to 37 CFR 5.15(b).

SPE RESPONSE FOR CERTIFICATE OF CORRECTION

Paper No.: _____

DATE : 01/11/12

TO SPE OF : ART UNIT 1771

SUBJECT : Request for Certificate of Correction for Appl. No.: 12/404,139 Patent No.: 8016977

CofC mailroom date: 11/7/11

Please respond to this request for a certificate of correction within 7 days.

FOR IFW FILES:

Please review the requested changes/corrections as shown in the **COCIN** document(s) in the IFW application image. No new matter should be introduced, nor should the scope or meaning of the claims be changed.

Please complete the response (see below) and forward the completed response to scanning using document code **COCX**.

FOR PAPER FILES:

Please review the requested changes/corrections as shown in the attached certificate of correction. Please complete this form (see below) and forward it with the file to:

Certificates of Correction Branch (CofC)
Randolph Square – 9D10-A
Palm Location 7580

RoChaun Hardwick
Certificates of Correction Branch
703-756-1580

Thank You For Your Assistance

The request for issuing the above-identified correction(s) is hereby:
Note your decision on the appropriate box.

X Approved	**All** changes apply.
☐ **Approved in Part**	Specify below which changes **do not** apply.
☐ **Denied**	State the reasons for denial below.

Comments: ok to enter

/Duane Smith/ 1776

SPE **Art Unit**

UNITED STATES PATENT AND TRADEMARK OFFICE

Commissioner for Patents
United States Patent and Trademark Office
P.O. Box 1450
Alexandria, VA 22313-1450
www.uspto.go

CRAIN, CATON & JAMES
FIVE HOUSTON CENTER
1401 MCKINNEY, 17TH FLOOR
HOUSTON, TX 77010

MAILED
AUG 23 2010
OFFICE OF PETITIONS

Applicant: Paulk, et al.
Appl. No.: 12/404,181
Filing Date: March 13, 2009
Title: SYSTEMS AND METHODS FOR REAL TIME DATA MANAGEMENT IN A COLLABORATIVE ENVIROMENT
Attorney Docket No.: 33849-218
Pub. No.: US 2009/0254569 A1
Pub. Date: October 8, 2009

This is a decision on the request for a corrected patent application publication under 37 CFR 1.221(b), received on December 4, 2009 for the above-identified application.

The request is DISMISSED.

Applicant requests that the application be republished because the patent application publication contains material errors wherein the preliminary filed on April 8, 2009, was not included in the publication.

37 CFR 1.221 (b) is applicable "only when the Office makes a material mistake which is apparent from Office records.... Any request for a corrected publication or revised patent application publication other than provided as provided in paragraph (a) of this section must be filed within two months from the date of the patent application publication. This period is not extendable." A material mistake must affect the public's ability to appreciate the technical disclosure of the patent application publication, to determine the scope of the patent application publication, or to determine the scope of the provisional rights that an applicant may seek to enforce upon issuance of a patent. [1]

The error noted by requestor with respect to the preliminary amendment is not an Office error. The patent application publication does not include a mistake regarding the failure to include the preliminary amendment to the specification because patent application publications are not required to include preliminary amendments. See 37 CFR 1.215(a). The "failure to include an

[1] Changes to Implement Eighteen-Month Publication of Patent Applications, 65 FR 57023, 57038 (Sept. 20, 2000), 1239, Off. Gaz. Pat. Office Notices 63, 75 (Oct. 10, 2000) (final rule).

amendment is not an Office error." See MPEP 1130(b). The publication accurately reflected the specification as filed.

The applicant is advised that a "request for republication of an application previously published" may be filed under 37 CFR 1.221 (a). Such a request for republication "must include a copy of the application compliance with the Office's electronic filing system requirements and be accompanied by the publication fee set forth in § 1.18 (d) and the processing fee set forth in § 1.17 (i)." If the request for republication does not comply with the electronic filing system requirements, the republication will not take place and the publication fee set forth in § 1.18 (d) will be refunded. The processing fee will be retained.

A guide for filing a request for a Pre-Grant Publication, such as a request for republication, may be found on the link below:

http://www.uspto.gov/ebc/portal/tutorials.htm

Any request for republication under 37 CFR 1.221(a), must be submitted via the EFS system, as a "Pre-Grant Publication".

Inquiries relating to this matter may be directed to Mark Polutta at (571) 272-7709.

Mark Polutta
Senior Legal Advisor
Office of Patent Legal Administration
Office of the Deputy Commissioner
for Patent Examination Policy

UNITED STATES PATENT AND TRADEMARK OFFICE

UNITED STATES DEPARTMENT OF COMMERCE
United States Patent and Trademark Office
Address: COMMISSIONER FOR PATENTS
P.O. Box 1450
Alexandria, Virginia 22313-1450
www.uspto.gov

APPLICATION NO.	FILING DATE	FIRST NAMED INVENTOR	ATTORNEY DOCKET NO.	CONFIRMATION NO.
12/404,181	03/13/2009	Martin D. Paulk	33849-218	1220

30903 7590 11/24/2010

CRAIN, CATON & JAMES
FIVE HOUSTON CENTER
1401 MCKINNEY, 17TH FLOOR
HOUSTON, TX 77010

EXAMINER	
HARPER, ELIYAH STONE	
ART UNIT	**PAPER NUMBER**
2166	

NOTIFICATION DATE	DELIVERY MODE
11/24/2010	ELECTRONIC

Please find below and/or attached an Office communication concerning this application or proceeding.

The time period for reply, if any, is set in the attached communication.

Notice of the Office communication was sent electronically on above-indicated "Notification Date" to the following e-mail address(es):

wjensen@craincaton.com
jhudson@craincaton.com
ipdocket@craincaton.com

UNITED STATES PATENT AND TRADEMARK OFFICE

Commissioner for Patents
United States Patent and Trademark Office
P.O. Box 1450
Alexandria, VA 22313-1450
www.uspto.gov

CRAIN, CATON & JAMES
FIVE HOUSTON CENTER
1401 MCKINNEY, 17TH FLOOR
HOUSTON TX 77010

Applicant: Paulk et al.
Appl. No.: 12/404,181
Filing Date: March 13, 2009
Title: SYSTEMS AND METHODS FOR REAL TIME DATA MANAGEMENT IN A COLLABORATIVE ENVIRONMENT
Attorney Docket No.: 33849-218
Pub. No.: US 2009/0254569 A1
Pub. Date: October 8, 2009

This is a decision on the request for republication of patent application publication under 37 CFR 1.221(a), filed on November 23, 2010, for the above-identified application.

The request under 37 CFR 1.221(a) is DISMISSED.

37 CFR 1.221(a) requires "a copy of the application in compliance with the Office electronic filing system requirements and be accompanied by the publication fee set forth in § 1.18(d) and the processing fee set forth in § 1.17(i)". If the request for republication does not comply with the electronic filing system requirements, the republication will not take place and the publication fee set forth in § 1.18(d) will be refunded. The processing fee will be retained.

The applicant did not supply a copy of the application in compliance with the Office electronic filing system, as required by 37 CFR 1.221(a) because **the applicant submitted the papers as a "Document for an existing application", which are entered into the application file, and not as a "Pre-Grant Publication" submission**. The request for republication does not comply with the electronic filing system requirements, thus republication will not take place.

Any request for republication under 37 CFR 1.221(a), must be submitted via the EFS system, as a Pre-Grant publication submission and must include a copy of the application in compliance with the Office electronic filing system requirements. The applicant is directed to the following website for additional instructions on how to submit a Pre-Grant Publication submission via the electronic filing system:

http://www.uspto.gov/ebc/portal/efs/pgpub_quickstart.pdf

Applicant is also advised that any amendment to be included in the publication, must be incorporated into a clean version of the appropriate application papers. For example, any amendment to the specification should be incorporated into the specification, and a clean copy of the specification must be provided for publication purposes.

Any questions or requests for reconsideration of the decision should be addressed as follows:

By mail to: Mail Stop PGPUB
Commissioner for Patents
P.O. Box 1450
Alexandria, Va. 22313-1450

By facsimile: 571-273-8300

Telephone inquiries regarding this correspondence should be directed to The Office of Data Management at 571-272-4200.

Tammy J. Koontz
Office of Data Management
United States Patent & Trademark Office

Adjustment date: 11/24/2010 KKING1
11/23/2010 INTEFSW 00010527 503385 12404181
01 FC:1504 300.00 CR

UNITED STATES PATENT AND TRADEMARK OFFICE

Commissioner for Patents
United States Patent and Trademark Office
P.O. Box 1450
Alexandria, VA 22313-1450
www.uspto.gov

MAILED

SEP 27 2010

OFFICE OF PETITIONS

LEVINE BAGADE HAN LLP
2400 Geng Road, Suite 120
Palo Alto, CA 94303

In re Application of	:	
Jon Heim	:	
Application No. 12/404,237	:	DECISION ON PETITION
Filed: March 13, 2009	:	TO WITHDRAW
Attorney Docket No. ARMUNA00101	:	FROM RECORD
	:	

This is a decision on the Request to Withdraw as attorney or agent of record under 37 C.F.R. § 1.36(b), filed August 24, 2010.

The request is **NOT APPROVED** because it is moot.

A review of the file record indicates that the power of attorney to Levine Bagade Han LLP has been revoked by the assignee of the patent application on September 15, 2010. Accordingly, the request to withdraw under 37 C.F.R. § 1.36(b) is moot.

All future communications from the Office will continue to be directed to the below-listed address until otherwise notified by applicant.

Telephone inquires concerning this decision should be directed to Terri Johnson at 571-272-2991.

Terri Johnson
Petitions Examiner
Office of Petitions

cc: **BAYER MATERIAL SCIENCE LLC**
100 BAYER ROAD
PITTSBURGH PA 15205

UNITED STATES PATENT AND TRADEMARK OFFICE

Commissioner for Patents
United States Patent and Trademark Office
P.O. Box 1450
Alexandria, VA 22313-1450
www.uspto.gov

Genomic Health, Inc. (Bozicevic, Field & Francis)
c/o Kathleen Determann
301 Penobscot Road
Redwood City CA 94063

MAILED

FEB 03 2012

OFFICE OF PETITIONS

In re Application of :
Baker, et al. :
Application No. 12/404,268 : DECISION ON PETITION
Filed: March 13, 2009 :
Attorney Docket No. GHDX-036 :

This is a decision on the petition under 37 CFR 1.182, filed, January 19, 2012, to correct the spelling of the name of inventor "KIM LANGONE" to – Kim Clark-Langone --.

The petition is **GRANTED**.

Office records have been corrected to reflect the correct spelling of the above-named inventor. A corrected Filing Receipt, which sets forth the correct spelling of the above-named inventor, accompanies this decision on petition.

As authorized, the $400 fee for the petition under 37 CFR 1.182 has been assessed to petitioner's deposit account.

Any questions concerning this matter may be directed to the undersigned at (571) 272-3205.

The matter is being referred to the Certificate of Corrections Branch for issuance of the requested certificate of correction.

/ALESIA M. BROWN/

Alesia M. Brown
Attorney Advisor
Office of Petitions

ATTACHMENT: Corrected Filing Receipt

UNITED STATES PATENT AND TRADEMARK OFFICE

UNITED STATES DEPARTMENT OF COMMERCE
United States Patent and Trademark Office
Address: COMMISSIONER FOR PATENTS
P.O. Box 1450
Alexandria, Virginia 22313-1450
www.uspto.gov

APPLICATION NUMBER	FILING or 371(c) DATE	GRP ART UNIT	FIL FEE REC'D	ATTY.DOCKET.NO	TOT CLAIMS	IND CLAIMS
12/404,268	03/13/2009	1634	962	GHDX-036	17	2

CONFIRMATION NO. 1436

CORRECTED FILING RECEIPT

80811
Genomic Health, Inc. (Bozicevic, Field & Francis)
c/o Kathleen Determann
301 Penobscot Road
Redwood City, CA 94063

OC00000052383285

Date Mailed: 02/02/2012

Receipt is acknowledged of this non-provisional patent application. The application will be taken up for examination in due course. Applicant will be notified as to the results of the examination. Any correspondence concerning the application must include the following identification information: the U.S. APPLICATION NUMBER, FILING DATE, NAME OF APPLICANT, and TITLE OF INVENTION. Fees transmitted by check or draft are subject to collection. Please verify the accuracy of the data presented on this receipt. **If an error is noted on this Filing Receipt, please submit a written request for a Filing Receipt Correction. Please provide a copy of this Filing Receipt with the changes noted thereon. If you received a "Notice to File Missing Parts" for this application, please submit any corrections to this Filing Receipt with your reply to the Notice. When the USPTO processes the reply to the Notice, the USPTO will generate another Filing Receipt incorporating the requested corrections**

Applicant(s)

Joffre B. Baker, Montara, CA;
Wayne Cowens, Tiburon, CA;
Kim Clark-Langone, Sunnyvale, CA;
James Hackett, San Jose, CA;
Drew Watson, Los Altos, CA;
Soonmyung Paik, Pittsburgh, PA;

Power of Attorney: The patent practitioners associated with Customer Number 80811

Domestic Priority data as claimed by applicant

This appln claims benefit of 61/069,373 03/14/2008

Foreign Applications (You may be eligible to benefit from the **Patent Prosecution Highway** program at the USPTO. Please see http://www.uspto.gov for more information.)

If Required, Foreign Filing License Granted: 03/26/2009

The country code and number of your priority application, to be used for filing abroad under the Paris Convention, is **US 12/404,268**

Projected Publication Date: Not Applicable

Non-Publication Request: No

Early Publication Request: No

Title

GENE EXPRESSION MARKERS FOR PREDICTION OF PATIENT RESPONSE TO CHEMOTHERAPY

Preliminary Class

435

PROTECTING YOUR INVENTION OUTSIDE THE UNITED STATES

Since the rights granted by a U.S. patent extend only throughout the territory of the United States and have no effect in a foreign country, an inventor who wishes patent protection in another country must apply for a patent in a specific country or in regional patent offices. Applicants may wish to consider the filing of an international application under the Patent Cooperation Treaty (PCT). An international (PCT) application generally has the same effect as a regular national patent application in each PCT-member country. The PCT process **simplifies** the filing of patent applications on the same invention in member countries, but **does not result** in a grant of "an international patent" and does not eliminate the need of applicants to file additional documents and fees in countries where patent protection is desired.

Almost every country has its own patent law, and a person desiring a patent in a particular country must make an application for patent in that country in accordance with its particular laws. Since the laws of many countries differ in various respects from the patent law of the United States, applicants are advised to seek guidance from specific foreign countries to ensure that patent rights are not lost prematurely.

Applicants also are advised that in the case of inventions made in the United States, the Director of the USPTO must issue a license before applicants can apply for a patent in a foreign country. The filing of a U.S. patent application serves as a request for a foreign filing license. The application's filing receipt contains further information and guidance as to the status of applicant's license for foreign filing.

Applicants may wish to consult the USPTO booklet, "General Information Concerning Patents" (specifically, the section entitled "Treaties and Foreign Patents") for more information on timeframes and deadlines for filing foreign patent applications. The guide is available either by contacting the USPTO Contact Center at 800-786-9199, or it can be viewed on the USPTO website at http://www.uspto.gov/web/offices/pac/doc/general/index.html.

For information on preventing theft of your intellectual property (patents, trademarks and copyrights), you may wish to consult the U.S. Government website, http://www.stopfakes.gov. Part of a Department of Commerce initiative, this website includes self-help "toolkits" giving innovators guidance on how to protect intellectual property in specific countries such as China, Korea and Mexico. For questions regarding patent enforcement issues, applicants may call the U.S. Government hotline at 1-866-999-HALT (1-866-999-4158).

LICENSE FOR FOREIGN FILING UNDER

Title 35, United States Code, Section 184

Title 37, Code of Federal Regulations, 5.11 & 5.15

GRANTED

The applicant has been granted a license under 35 U.S.C. 184, if the phrase "IF REQUIRED, FOREIGN FILING LICENSE GRANTED" followed by a date appears on this form. Such licenses are issued in all applications where

the conditions for issuance of a license have been met, regardless of whether or not a license may be required as set forth in 37 CFR 5.15. The scope and limitations of this license are set forth in 37 CFR 5.15(a) unless an earlier license has been issued under 37 CFR 5.15(b). The license is subject to revocation upon written notification. The date indicated is the effective date of the license, unless an earlier license of similar scope has been granted under 37 CFR 5.13 or 5.14.

This license is to be retained by the licensee and may be used at any time on or after the effective date thereof unless it is revoked. This license is automatically transferred to any related applications(s) filed under 37 CFR 1.53(d). This license is not retroactive.

The grant of a license does not in any way lessen the responsibility of a licensee for the security of the subject matter as imposed by any Government contract or the provisions of existing laws relating to espionage and the national security or the export of technical data. Licensees should apprise themselves of current regulations especially with respect to certain countries, of other agencies, particularly the Office of Defense Trade Controls, Department of State (with respect to Arms, Munitions and Implements of War (22 CFR 121-128)); the Bureau of Industry and Security, Department of Commerce (15 CFR parts 730-774); the Office of Foreign AssetsControl, Department of Treasury (31 CFR Parts 500+) and the Department of Energy.

NOT GRANTED

No license under 35 U.S.C. 184 has been granted at this time, if the phrase "IF REQUIRED, FOREIGN FILING LICENSE GRANTED" DOES NOT appear on this form. Applicant may still petition for a license under 37 CFR 5.12, if a license is desired before the expiration of 6 months from the filing date of the application. If 6 months has lapsed from the filing date of this application and the licensee has not received any indication of a secrecy order under 35 U.S.C. 181, the licensee may foreign file the application pursuant to 37 CFR 5.15(b).

SelectUSA

The United States represents the largest, most dynamic marketplace in the world and is an unparalleled location for business investment, innovation and commercialization of new technologies. The USA offers tremendous resources and advantages for those who invest and manufacture goods here. Through SelectUSA, our nation works to encourage, facilitate, and accelerate business investment. To learn more about why the USA is the best country in the world to develop technology, manufacture products, and grow your business, visit SelectUSA.gov.

SPE RESPONSE FOR CERTIFICATE OF CORRECTION

Paper No.: _____

DATE : 01-31-11

TO SPE OF : ART UNIT 3774

SUBJECT : Request for Certificate of Correction for Appl. No.: 12/404273 Patent No.: 7837713

CofC mailroom date: 01-31-11

Please respond to this request for a certificate of correction within 7 days.

FOR IFW FILES:

Please review the requested changes/corrections as shown in the **COCIN** document(s) in the IFW application image. No new matter should be introduced, nor should the scope or meaning of the claims be changed.

Please complete the response (see below) and forward the completed response to scanning using document code **COCX**.

FOR PAPER FILES:

Please review the requested changes/corrections as shown in the attached certificate of correction. Please complete this form (see below) and forward it with the file to:

Certificates of Correction Branch (CofC)
Randolph Square – 9D10-A
Palm Location 7580

Angela Green
Certificates of Correction Branch
(703) 756-1541

Thank You For Your Assistance

The request for issuing the above-identified correction(s) is hereby:

Note your decision on the appropriate box.

☒ Approved — All changes apply.

☐ Approved in Part — Specify below which changes do not apply.

☐ Denied — State the reasons for denial below.

Comments: _____

/Alvin J. Stewart/ SPE Dave Isabella Art Unit 3774

UNITED STATES DEPARTMENT OF COMMERCE
U.S. Patent and Trademark Office
Address: COMMISSIONER FOR PATENTS
P.O. Box 1450
Alexandria, Virginia 22313-1450

APPLICATION NO./ CONTROL NO.	FILING DATE	FIRST NAMED INVENTOR / PATENT IN REEXAMINATION	ATTORNEY DOCKET NO.
12/404,273	13 March 2009	PETERSEN, DAVID A.	14XL-147082

DON J. PELTO
Sheppard, Mullin, Richter & Hampton LLP
1300 I STREET, NW
11TH FLOOR EAST
WASHINGTON, DC 20005

EXAMINER	
ALVIN STEWART	
ART UNIT	**PAPER**
3774	20110531

DATE MAILED:

Please find below and/or attached an Office communication concerning this application or proceeding.

Commissioner for Patents

Certificate of Correction filed on 01/21/2011 has been accepted.

05/31/2011

/Alvin J Stewart/
Primary Examiner, Art Unit 3774

UNITED STATES PATENT AND TRADEMARK OFFICE

Commissioner for Patents
United States Patent and Trademark Office
P.O. Box 1450
Alexandria, VA 22313-1450
www.uspto.gov

SURGISENSE CORPORATION
4434 VOLTA PLACE , NW
WASHINGTON DC 20007

Mail Date: March 28, 2011

In re Application of: Zand et al.
Application No.: 12/404276
Filed: March 13, 2009
Title: SENSING ADJUNCT FOR SURGICAL STAPLERS

DECISION ON PETITION TO MAKE SPECIAL FOR NEW APPLICATION UNDER 37 C.F.R. § 1.102 & M.P.E.P. § 708.02

This is a decision on the petition filed on December 28, 2010 to make the above-identified application special for accelerated examination procedure under 37 C.F.R. § 1.102(d).

The petition to make the application special is **DENIED**.

REGULATION AND PRACTICE

To be eligible for accelerated examination under 37 C.F.R. § 1.102(d) and pursuant to the "Change to Practice for Petitions in Patent Applications to Make Special and for Accelerated Examination" published in the Federal Register on June 26, 2006 (71 Fed. Reg. 36323), the following conditions must be satisfied:

1. The application must be a non-reissue utility or design application filed under 37 CFR 1.111(a);
2. The application, the petition and the required fees must be filed electronically using the USPTO's electronic filing system (EFS), or EFS-web; if not filed electronically, a statement asserting that EFS and EFS-web were not available during the normal business hours;
3. The application, at the time of filing, must be complete under 37 CFR 1.51 and in condition for examination;
4. The application must contain three or fewer independent claims and twenty or fewer total claims and the claims must be directed to a single invention.
5. The petition must be filed with the application.

The application as filed is not eligible for the accelerated examination under 37 C.F.R. § 1.102(d) because the petition was not filed with the application. As noted in the policy statement referenced above, any petition to make special filed on or after the effective date must meet the new requirements set forth in the 71 Fed. Reg. 36323 notice. Applications filed before

the effective date will not be eligible for the revised accelerated examination program. The effective date of the change in practice was August 25, 2006. Thus the instant petition must be reviewed under the revised practice and the instant application is ineligible.

For the above-stated reasons, the petition is **DENIED**. The application will therefore be taken up by the examiner for action in its regular turn.

Any inquiry regarding this decision should be directed to Linda Sholl, TC 3700 Special Program Examiner, at (571) 272-4391.

Linda Sholl
Special Program Examiner
Technology Center 3700

UNITED STATES PATENT AND TRADEMARK OFFICE

Commissioner for Patents
United States Patent and Trademark Office
P.O. Box 1450
Alexandria, VA 22313-1450
www.uspto.gov

PERKINS COIE LLP
PATENT-SEA
P.O. BOX 1247
SEATTLE WA 98111-1247

MAILED

JUN 01 2011

OFFICE OF PETITIONS

In re Application of :
Morgan T. Johnson :
Application No. 12/404,277 : ON PETITION
Filed: March 13, 2009 :
Attorney Docket No. 74186-8007.US01 :

This is a decision on the petition under the unintentional provisions of 37 CFR 1.137(b), filed March 10, 2011, to revive the above-identified application.

The petition is **GRANTED**.

The application became abandoned for failure to reply in a timely manner to the non-final Office action mailed August 3, 2010, which set a shortened statutory period for reply of three (3) months. No extensions of time under the provisions of 37 CFR 1.136(a) were obtained. Accordingly, the application became abandoned on November 4, 2010. A Notice of Abandonment was mailed on March 2, 2011.

The petition satisfies the requirements of 37 CFR 1.137(b) in that petitioner has supplied (1) the reply in the form of a continuing application under 37 CFR 1.53(b), (2) the petition fee of $810, and (3) a proper statement of unintentional delay. Accordingly, the filing of a continuing application under 37 CFR 1.53(b) is accepted as being unintentionally delayed.

The application is being revived solely for purposes of continuity. As continuity has been established by this decision reviving the application, the application is again abandoned in favor of a continuing application under 37 CFR 1.53(b).

It is not apparent whether the person signing the statement of unintentional delay was in a position to have firsthand or direct knowledge of the facts and circumstances of the delay at issue. Nevertheless, such statement is being treated as having been made as the result of a reasonable inquiry into the facts and circumstances of such delay. See 37 CFR 10.18(b) and Changes to Patent Practice and Procedure; Final Rule Notice, 62 Fed. Reg. 53131, 53178 (October 10, 1997), 1203 Off. Gaz. Pat. Office 63, 103 (October 21, 1997). In the event that such an inquiry has not been made, petitioner must make such an inquiry. If such inquiry results in the discovery that it is not correct that the entire delay in filing the required reply from the due date for the reply until the filing of a grantable petition pursuant to 37 CFR 1.137(b) was unintentional, petitioner must notify the Office.

It should be noted that when filing a continuation application, the documents must be filed separately to obtain a new application number (this does not include design applications). The Office, moved the documents to application number is 13/068,158.

Telephone inquiries concerning this decision should be directed to Kimberly Inabinet at (571) 272-4618.

/Kimberly Inabinet/

Kimberly Inabinet
Petitions Examiner
Office of Petitions

UNITED STATES PATENT AND TRADEMARK OFFICE

Commissioner for Patents
United States Patent and Trademark Office
P.O. Box 1450
Alexandria, VA 22313-1450
www.uspto.gov

MAILED

MAR 17 2011

OFFICE OF PETITIONS

LEE & HAYES, PLLC
601 W. RIVERSIDE AVENUE
SUITE 1400
SPOKANE, WA 99201

In re Application of :
SINVHAL-SHARMA :
Application No. 12/404,305 : DECISION ON PETITION
Filed: March 14, 2009 : TO WITHDRAW
Attorney Docket No. SHAR001US0 : FROM RECORD
:

This is a decision on the Request to Withdraw as attorney or agent under 37 C.F.R. § 1.36(b) filed January 28, 2011.

The request is **NOT APPROVED**.

The request to withdraw from record cannot be approved because the request to change the correspondence address is not accompanied by a power of attorney nor is the correspondence address that of an assignee of the entire interest who has been properly made of record under 37 CFR 3.71 or the first named inventor.

All future communications from the Office will continue to be directed to the above-identified address until otherwise properly notified.

Telephone inquires concerning this decision should be directed to the undersigned at (571) 272-6735.

/Diane C. Goodwyn/
Diane C. Goodwyn
Petitions Examiner
Office of Petitions

cc: MARGARET ANDERSON
106 E. 6TH STREET, SUITE 900
AUSTIN TX 78701

UNITED STATES PATENT AND TRADEMARK OFFICE

Commissioner for Patents
United States Patent and Trademark Office
P.O. Box 1450
Alexandria, VA 22313-1450
www.uspto.gov

MAILED

SEP 24 2010

OFFICE OF PETITIONS

LAW OFFICES OF JERRY A. SCHULMAN
1S376 SUMMIT AVENUE
COURT C
OAKBROOK TERRACE IL 60181

In re Application of :
Akahoshi :
Application No. 12/404,307 : ON PETITION
Filed: March 15, 2009 :
Attorney Docket No. 10007-2-165 :

This is a decision on the petition under 37 CFR 1.137(b), filed September 3, 2010, to revive the above-identified application.

The petition is **GRANTED**.

The application became abandoned on May 31, 2009, for failure to respond to the Notice to File Corrected Application Papers mailed March 30, 2009.

The petition satisfies the requirements of 37 CFR 1.137(b) in that petitioner has supplied (1) the reply in the form of a replacement drawing sheet; (2) the petition fee of $810.00, and (3) an adequate statement of unintentional delay.

Telephone inquiries concerning this decision should be directed to the undersigned at (571) 272-3222.

The application file is being directed to the Office of Patent Application Processing further processing.

/Kenya A. McLaughlin/

Kenya A. McLaughlin
Petitions Attorney
Office of Petitions

UNITED STATES PATENT AND TRADEMARK OFFICE

Commissioner for Patents
United States Patent and Trademark Office
P.O. Box 1450
Alexandria, VA 22313-1450
www.uspto.gov

ECKERT SEAMANS CHERIN & MELLOTT
600 GRANT STREET
44TH FLOOR
PITTSBURGH PA 15219

MAILED

MAR 28 2011

OFFICE OF PETITIONS

In re Application of	:	
En-Hui Yang, et al.	:	
Application No. 12/404,417	:	DECISION GRANTING PETITION
Filed: March 16, 2009	:	UNDER 37 CFR 1.313(c)(2)
Attorney Docket No. 291010-01118-1	:	

This is a decision on the petition under 37 CFR 1.313(c)(2), filed, March 28, 2011 to withdraw the above-identified application from issue after payment of the issue fee.

The petition is **GRANTED**.

The above-identified application is withdrawn from issue for consideration of a submission under 37 CFR 1.114 (request for continued examination). *See* 37 CFR 1.313(c)(2).

Petitioner is advised that the issue fee paid on February 16, 2077 cannot be refunded. If, however, this application is again allowed, petitioner may request that it be applied towards the issue fee required by the new Notice of Allowance.[1]

Telephone inquiries should be directed to Terri Johnson at (571) 272-2991.

This application is being referred to Technology Center AU 2628 for processing of the request for continued examination under 37 CFR 1.114 and for consideration of the concurrently filed amendment and the petition under 37 C.F.R. 1.78(a)(6).

/Terri Johnson/
Terri Johns
Petitions Examiner
Office of Petitions

[1] *The request to apply the issue fee to the new Notice may be satisfied by completing and returning the new Part B – Fee(s) Transmittal Form (along with any balance due at the time of submission). Petitioner is advised that the Issue Fee Transmittal Form must be completed and timely submitted to avoid abandonment of the application.*

UNITED STATES PATENT AND TRADEMARK OFFICE

Commissioner for Patents
United States Patent and Trademark Office
P.O. Box 1450
Alexandria, VA 22313-1450
www.uspto.gov

ECKERT SEAMANS CHERIN & MELLOTT
600 GRANT STREET
44TH FLOOR
PITTSBURGH PA 15219

MAILED

APR 05 2011

OFFICE OF PETITIONS

In re Application of :
En-Hui Yang et al :
Application No. 12/404,417 : DECISION ON PETITION
Filed: March 16, 2009 : UNDER 37 CFR 1.78(a)(6)
Attorney Docket No. 291010-01118-1 :

This is a decision on the petition under 37 CFR 1.78(a)(6), filed March 28, 2011, to accept an unintentionally delayed claim under 35 U.S.C. §119(e) for the benefit of the prior-filed provisional application set forth in the concurrently filed amendment.

The petition is **GRANTED.**

A petition under 37 CFR 1.78(a)(6) is only applicable to those applications filed on or after November 29, 2000. Further, the petition is appropriate only after expiration of the period specified in 37 CFR 1.78(a)(5)(ii) and must be filed during the pendency of the nonprovisional application. In addition, the petition must be accompanied by:

(1) the reference required by 35 U.S.C. § 119(e) and 37 CFR 1.78(a)(5)(i) to the prior-filed application, unless previously submitted;
(2) the surcharge set forth in § 1.17(t); and
(3) a statement that the entire delay between the date the claim was due under 37 CFR 1.78(a)(5)(ii) and the date the claim was filed was unintentional. The Director may require additional information where there is a question whether the delay was unintentional.

Additionally, the instant nonprovisional application must be pending at the time of filing of the reference to the prior-filed provisional application as required by 37 CFR 1.78(a)(5)(ii). Further, the nonprovisional application claiming the benefit of the prior-filed provisional application must have been filed within twelve months of the filing date of the prior-filed provisional application.

All of the above requirements having been satisfied, the late claim for priority under 35 U.S.C. § 119(e) is accepted as being unintentionally delayed.

The granting of the petition to accept the delayed benefit claim to the prior-filed application under 37 CFR 1.78(a)(6) should not be construed as meaning that this application is entitled to the benefit of the filing date of the prior-filed application. In order for this application to be

entitled to the benefit of the prior-filed application, all other requirements under 35 U.S.C. §119(e) and 37 CFR 1.78(a)(4) and (a)(5) must be met. Similarly, the fact that the corrected Filing Receipt accompanying this decision on petition includes the prior-filed application should not be construed as meaning that applicant is entitled to the claim for benefit of priority to the prior-filed application noted thereon. Accordingly, the examiner will, in due course, consider this benefit claim and determine whether the application is entitled to the benefit of the earlier filing date.

A corrected Filing Receipt, which includes the priority claim to the prior-filed provisional application, accompanies this decision on petition.

Any inquiries concerning this decision may be directed to the undersigned at (571) 272-3208. All other inquiries concerning either the examination procedures or status of the application should be directed to the Technology Center.

The application is being forwarded to Technology Center AU 2628 for consideration by the examiner of the claim under 35 U.S.C. §119(e) for the benefit of priority to the prior-filed provisional application.

/KOC/
Karen Creasy
Petition Examiner
Office of Petitions

ATTACHMENT: Corrected Filing Receipt

UNITED STATES PATENT AND TRADEMARK OFFICE

UNITED STATES DEPARTMENT OF COMMERCE
United States Patent and Trademark Office
Address: COMMISSIONER FOR PATENTS
P.O. Box 1450
Alexandria, Virginia 22313-1450
www.uspto.gov

APPLICATION NUMBER	FILING or 371(c) DATE	GRP ART UNIT	FIL FEE REC'D	ATTY.DOCKET.NO	TOT CLAIMS	IND CLAIMS
12/404,417	03/16/2009	2628	1442	291010-01118-1	21	3

CONFIRMATION NO. 1758

CORRECTED FILING RECEIPT

3705
ECKERT SEAMANS CHERIN & MELLOTT
600 GRANT STREET
44TH FLOOR
PITTSBURGH, PA 15219

OC000000046906330

Date Mailed: 04/01/2011

Receipt is acknowledged of this non-provisional patent application. The application will be taken up for examination in due course. Applicant will be notified as to the results of the examination. Any correspondence concerning the application must include the following identification information: the U.S. APPLICATION NUMBER, FILING DATE, NAME OF APPLICANT, and TITLE OF INVENTION. Fees transmitted by check or draft are subject to collection. Please verify the accuracy of the data presented on this receipt. **If an error is noted on this Filing Receipt, please submit a written request for a Filing Receipt Correction. Please provide a copy of this Filing Receipt with the changes noted thereon. If you received a "Notice to File Missing Parts" for this application, please submit any corrections to this Filing Receipt with your reply to the Notice. When the USPTO processes the reply to the Notice, the USPTO will generate another Filing Receipt incorporating the requested corrections**

Applicant(s)

En-Hui Yang, Waterloo, CANADA;
Jianfen Zeng, Guangdong, CHINA;

Power of Attorney: The patent practitioners associated with Customer Number 03705

Domestic Priority data as claimed by applicant

This application is a DIV of 10/831,656 04/23/2004 PAT 7,525,552
which claims benefit of 60/564,033 04/21/2004

Foreign Applications (You may be eligible to benefit from the **Patent Prosecution Highway** program at the USPTO. Please see http://www.uspto.gov for more information.)

If Required, Foreign Filing License Granted: 03/26/2009

The country code and number of your priority application, to be used for filing abroad under the Paris Convention, is **US 12/404,417**

Projected Publication Date: Not Applicable

Non-Publication Request: No

Early Publication Request: No

Title

METHOD, SYSTEM AND SOFTWARE PRODUCT FOR COLOR IMAGE ENCODING

Preliminary Class

345

PROTECTING YOUR INVENTION OUTSIDE THE UNITED STATES

Since the rights granted by a U.S. patent extend only throughout the territory of the United States and have no effect in a foreign country, an inventor who wishes patent protection in another country must apply for a patent in a specific country or in regional patent offices. Applicants may wish to consider the filing of an international application under the Patent Cooperation Treaty (PCT). An international (PCT) application generally has the same effect as a regular national patent application in each PCT-member country. The PCT process **simplifies** the filing of patent applications on the same invention in member countries, but **does not result** in a grant of "an international patent" and does not eliminate the need of applicants to file additional documents and fees in countries where patent protection is desired.

Almost every country has its own patent law, and a person desiring a patent in a particular country must make an application for patent in that country in accordance with its particular laws. Since the laws of many countries differ in various respects from the patent law of the United States, applicants are advised to seek guidance from specific foreign countries to ensure that patent rights are not lost prematurely.

Applicants also are advised that in the case of inventions made in the United States, the Director of the USPTO must issue a license before applicants can apply for a patent in a foreign country. The filing of a U.S. patent application serves as a request for a foreign filing license. The application's filing receipt contains further information and guidance as to the status of applicant's license for foreign filing.

Applicants may wish to consult the USPTO booklet, "General Information Concerning Patents" (specifically, the section entitled "Treaties and Foreign Patents") for more information on timeframes and deadlines for filing foreign patent applications. The guide is available either by contacting the USPTO Contact Center at 800-786-9199, or it can be viewed on the USPTO website at http://www.uspto.gov/web/offices/pac/doc/general/index.html.

For information on preventing theft of your intellectual property (patents, trademarks and copyrights), you may wish to consult the U.S. Government website, http://www.stopfakes.gov. Part of a Department of Commerce initiative, this website includes self-help "toolkits" giving innovators guidance on how to protect intellectual property in specific countries such as China, Korea and Mexico. For questions regarding patent enforcement issues, applicants may call the U.S. Government hotline at 1-866-999-HALT (1-866-999-4158).

LICENSE FOR FOREIGN FILING UNDER

Title 35, United States Code, Section 184

Title 37, Code of Federal Regulations, 5.11 & 5.15

GRANTED

The applicant has been granted a license under 35 U.S.C. 184, if the phrase "IF REQUIRED, FOREIGN FILING LICENSE GRANTED" followed by a date appears on this form. Such licenses are issued in all applications where the conditions for issuance of a license have been met, regardless of whether or not a license may be required as

set forth in 37 CFR 5.15. The scope and limitations of this license are set forth in 37 CFR 5.15(a) unless an earlier license has been issued under 37 CFR 5.15(b). The license is subject to revocation upon written notification. The date indicated is the effective date of the license, unless an earlier license of similar scope has been granted under 37 CFR 5.13 or 5.14.

This license is to be retained by the licensee and may be used at any time on or after the effective date thereof unless it is revoked. This license is automatically transferred to any related applications(s) filed under 37 CFR 1.53(d). This license is not retroactive.

The grant of a license does not in any way lessen the responsibility of a licensee for the security of the subject matter as imposed by any Government contract or the provisions of existing laws relating to espionage and the national security or the export of technical data. Licensees should apprise themselves of current regulations especially with respect to certain countries, of other agencies, particularly the Office of Defense Trade Controls, Department of State (with respect to Arms, Munitions and Implements of War (22 CFR 121-128)); the Bureau of Industry and Security, Department of Commerce (15 CFR parts 730-774); the Office of Foreign AssetsControl, Department of Treasury (31 CFR Parts 500+) and the Department of Energy.

NOT GRANTED

No license under 35 U.S.C. 184 has been granted at this time, if the phrase "IF REQUIRED, FOREIGN FILING LICENSE GRANTED" DOES NOT appear on this form. Applicant may still petition for a license under 37 CFR 5.12, if a license is desired before the expiration of 6 months from the filing date of the application. If 6 months has lapsed from the filing date of this application and the licensee has not received any indication of a secrecy order under 35 U.S.C. 181, the licensee may foreign file the application pursuant to 37 CFR 5.15(b).

UNITED STATES PATENT AND TRADEMARK OFFICE

UNITED STATES DEPARTMENT OF COMMERCE
United States Patent and Trademark Office
Address: COMMISSIONER FOR PATENTS
P.O. Box 1450
Alexandria, Virginia 22313-1450
www.uspto.gov

APPLICATION NO.	FILING DATE	FIRST NAMED INVENTOR	ATTORNEY DOCKET NO.	CONFIRMATION NO.
12/404,461	03/16/2009	Kazuaki KURIHARA	090341	1828

7590 08/05/2011

WESTERMAN, HATTORI, DANIELS & ADRIAN, LLP
1250 CONNECTICUT AVENUE, NW
SUITE 700
WASHINGTON, DC 20036

EXAMINER	
NGUYEN, TAN	
ART UNIT	PAPER NUMBER
2827	
NOTIFICATION DATE	DELIVERY MODE
08/05/2011	ELECTRONIC

DECISION GRANTING PETITION UNDER 37 CFR 1.138(d)

The declaration of express abandonment is recognized

This is in response to the petition under 37 CFR 1.138(d), requesting for a refund of any previously paid search fee and excess claims fee in the above-identified application.

The petition is granted.

The express abandonment is recognized. Any previously paid search fee and excess claims fee are hereby refunded.

Telephone inquiries should be directed to the Office of Data Management at (571) 272-4200.

Patent Publication Branch
Office of Data Management

Attorney Docket No. 09174/LH

This paper is being submitted via EFS-Web on January 31, 2011

In the event that this Paper is late filed, and the necessary petition for extension of time is not filed concurrently herewith, please consider this as a Petition for the requisite extension of time, and to the extent not already paid, authorization to charge the extension fee to Account No. 06-1378. In addition, authorization is hereby given to charge any fees for which payment has not been submitted, or to credit any overpayments, to Account No. 06-1378.

IN THE UNITED STATES PATENT AND TRADEMARK OFFICE

Applicant(s): Kimiyasu MIZUNO, et al.

Serial No. : 12/404,492

Confirm. No.: 1885

Filed : March 16, 2009

For : IMAGING APPARATUS, IMAGING METHOD AND COMPUTER-READABLE RECORDING MEDIUM STORING IMAGING PROGRAM RECORDED

Art Unit : 2622

Examiner : Lin Ye

REQUEST FOR PARTICIPATION IN THE PATENT PROSECUTION HIGHWAY (PPH) PROGRAM BETWEEN THE JPO AND THE USPTO

Commissioner for Patents
P.O. Box 1450
Alexandria, VA 22313-1450

Applicants hereby request participation in the Patent Prosecution Highway (PPH) Program and petition to make the above-identified application special under the PPH Program.

I. Eligibility of the Present Application for the PPH Program

Japanese Patent Application No. 2008-069627, filed March 18, 2008, contains allowed claims. The present application claims the benefit of priority of Japanese Patent Application No. 2008-069627. Accordingly, the present application is eligible for participation in the PPH Program.

II. Required Documents

A. A copy of the latest Office Action issued in Japanese Patent Application No. 2008-069627 is submitted herewith.

B. A copy of the claims determined to be patentable by the JPO in Japanese Patent Application No. 2008-069627 is submitted herewith (on pages of Japanese Patent No. 4561851 B2, which issued from Japanese Patent Application No. 2008-069627).

C. English translations of the documents identified in A. and B. above, along with statements that the English translations are accurate, are submitted herewith.

D. The latest Japanese Office Action and the references cited therein have already been cited in Information Disclosure Statements filed on July 12, 2010, March 17, 2010, and March 16, 2009. Accordingly, no IDS is submitted herewith.

III. Claims Correspondence Table

Claims in U.S. Application	Corresponding Patentable Claim of JPO Application
13	1
14	2
15	3
16	4
17	5
18	6

Explanation Regarding Correspondence

The claims of the U.S. application correspond to the patentable Japanese claims as indicated above, with revisions to delete multiple dependencies, and with some formal and grammatical revisions. Among other changes, the preamble of claim 18 has been revised to better comply with U.S. requirements.

IV. Claim Correspondence

All of the claims in the present U.S. application sufficiently correspond to the allowed claims in Japanese Patent Application No. 2008-069627.

* *

In view of the foregoing, applicant request participation in the PPH Program between the JPO and the USPTO and petition to make the above-identified application special under the PPH Program.

If the Office has any comments, questions, objections or recommendations, the Office is invited to telephone the undersigned prompt action.

Respectfully submitted,

/Douglas Holtz/

Douglas Holtz
Reg. No. 33,902

Frishauf, Holtz, Goodman & Chick, P.C.
220 Fifth Avenue - 16th Floor
New York, New York 10001-7708
Tel. No. (212) 319-4900
Fax No. (212) 319-5101
DH:iv
encs.

UNITED STATES PATENT AND TRADEMARK OFFICE

UNITED STATES DEPARTMENT OF COMMERCE
United States Patent and Trademark Office
Address: COMMISSIONER FOR PATENTS
P.O. Box 1450
Alexandria, Virginia 22313-1450
www.uspto.gov

APPLICATION NO.	FILING DATE	FIRST NAMED INVENTOR	ATTORNEY DOCKET NO.	CONFIRMATION NO.
12/404,492	03/16/2009	Kimiyasu Mizuno	09174/LH	1885

1933 7590 03/21/2011

HOLTZ, HOLTZ, GOODMAN & CHICK PC
220 Fifth Avenue
16TH Floor
NEW YORK, NY 10001-7708

EXAMINER	
YE, LIN	

ART UNIT	PAPER NUMBER
2622	

MAIL DATE	DELIVERY MODE
03/21/2011	PAPER

Please find below and/or attached an Office communication concerning this application or proceeding.

The time period for reply, if any, is set in the attached communication.

UNITED STATES PATENT AND TRADEMARK OFFICE

Commissioner for Patents
United States Patent and Trademark Office
P.O. Box 1450
Alexandria, VA 22313-1450
www.uspto.gov

HOLTZ, HOLTZ, GOODMAN & CHICK PC
220 Fifth Avenue
16TH Floor
NEW YORK NY 10001-7708

In re Application of	:	
MIZUNO, KIMIYASU et al.	:	DECISION ON REQUEST TO
Application No. 12/404,492	:	PARTICIPATE IN PATENT
Filed: March 16, 2009	:	PROSECUTION HIGHWAY
Attorney Docket No. **09174/LH**	:	PROGRAM AND PETITION
	:	TO MAKE SPECIAL UNDER
	:	37 CFR 1.102(a)

This is a decision on the request to participate in the Patent Prosecution Highway (PPH) program and the petition under 37 CFR 1.102(a), filed January 31, 2011 to make the above-identified application special.

The request and petition are **GRANTED**.

A grantable request to participate in the PPH program and petition to make special require:

(1) The U.S. application must validly claim priority under 35 U.S.C. 119(a) to one or more applications filed in the JPO;
(2) Applicant must submit a copy of the allowable/patentable claim(s) from the JPO application(s) along with an English translation thereof and a statement that the English translation is accurate;
(3) All the claims in the U.S. application must sufficiently correspond or be amended to sufficiently correspond to the allowable/patentable claim(s) in the JPO application(s);
(4) Examination of the U.S. application has not begun;
(5) Applicant must submit a copy of the latest office actions from each of the JPO application(s) containing the allowable/patentable claim(s) along with an English translation thereof and a statement that the English translation is accurate; and
(6) Applicant must submit an IDS listing the documents cited by the JPO examiner in the JPO office action along with copies of documents except U.S. patents or U.S. patent application publications.

The request to participate in the PPH program and petition comply with the above requirements. Accordingly, the above-identified application has been accorded "special" status.

Telephone inquiries concerning this decision should be directed to Daniel Swerdlow at 571-272-7531.

All other inquiries concerning the examination or status of the application should be directed to Patent Application Information Retrieval (PAIR) system.

The application is being forwarded to the examiner for action on the merits commensurate with this decision.

/ Daniel Swerdlow /

_____

Daniel Swerdlow
Quality Assurance Specialist
Technology Center 2600
Communications

UNITED STATES PATENT AND TRADEMARK OFFICE

Commissioner for Patents
United States Patent and Trademark Office
P.O. Box 1450
Alexandria, VA 22313-1450
www.uspto.gov

STAAS & HALSEY LLP
SUITE 700
1201 NEW YORK AVENUE, N.W.
WASHINGTON DC 20005

MAILED

SEP 07 2010

OFFICE OF PETITIONS

In re Application of
Masashi Endo
Application No. 12/404,499
Filed: March 16, 2009
Attorney Docket No. 0221.1297

DECISION ON REQUEST FOR REFUND

This is a decision on the Request For Refund filed April 16, 2010.

The request is **DISMISSED**.

Applicant requests a refund of the filing fees for the above application and asserts that the filing fees were previously debited on March 17, 2009. However, a review of Office finance records for the **above-identified application** indicates that the filing fees were only charged once.

Applicant is encouraged to note the below regarding the filing of a petition under 37 CFR 1.181(no fee) for an unintended duplicate filings via EFS-Web:

37 CFR 1.26(a) states, in part: "The Director may refund any fee paid by mistake or in excess of that required. A change of purpose after the payment of a fee, such as when a party desires to withdraw a patent filing for which the fee was paid, including an application, an appeal, or a request for an oral hearing, will not entitle a party to a refund of such fee."

However, the Office may find a mistake pursuant to 37 CFR 1.26, waive the presumption in 37 CFR 1.26 that applications are not entitled to filing fee refunds, and refund the filing fees associated with unintended duplicate application filings via EFS-Web when the following conditions have been met:

(1) Applicant must certify that they had filed the duplicate application(s) prior to receiving appropriate confirmation from the Office that the initial application filing via EFS-Web was received by the Office;

(2) the request for a refund must be filed within three months from the filing date of the first application receiving an appropriate acknowledgement;

(3) the request must include a statement which attests on a personal knowledge basis or to the satisfaction of the Director that the duplicate application was intended to be the original application;

(4) the duplicate application must have been filed via EFS-Web on or after March 16, 2006;

(5) the request must list the other application(s) of which the instant application is deemed to be a "duplicate"; and

(6) the request should include a statement of express abandonment of the instant application as it was filed in error.

When the above conditions have been met, the Office will generally accept the statement as an assertion that the duplicate application was filed by mistake without requiring further information.

If the request for refund is not filed within three months from the filing date of the first application receiving an appropriate acknowledgement, as an alternative, petitioner may wish to file a declaration of express abandonment of the application pursuant to 37 CFR 1.138(d) to obtain a refund of the search and excess claims fees. Applicant is advised to file the declaration without delay as the express abandonment can only be processed before an examination has been made of the application. Thereafter, applicant cannot obtain a refund of such fees except as provided in 37 CFR 1.26.

Further correspondence with respect to this matter should be delivered through one of the following mediums:

By mail: Mail Stop PETITIONS
Commissioner for Patents
Post Office Box 1450
Alexandria, VA 22313-1450

By hand: Customer Service Window
Mail Stop Petitions
Randolph Building
401 Dulany Street
Alexandria, VA 22314

By fax: (571) 273-8300
ATTN: Office of Petitions

By internet: EFS-Web
www.uspto.gov/ebc/efs_help.html
(for help using EFS-Web call the
Patent Electronic Business Center
at (866) 217-9197)

Any questions concerning this matter may be directed to the undersigned at (571) 272-3208.

/KOC/
Karen Creasy
Petitions Examiner
Office of Petitions

UNITED STATES PATENT AND TRADEMARK OFFICE

Commissioner for Patents
United States Patent and Trademark Office
P.O. Box 1450
Alexandria, VA 22313-1450
www.uspto.gov

STAAS & HALSEY LLP
SUITE 700
1201 NEW YORK AVENUE, N.W.
WASHINGTON DC 20005

MAILED

FEB 13 2012

OFFICE OF PETITIONS

In re Application of :
Endo :
Application No. 12/404,499 : DECISION
Filed/Deposited: 16 March, 2009 :
Attorney Docket No. 0221.1297 :

This is a decision on the papers filed on 9 January, 2012 , considered as a petition pursuant to 37 C.F.R. §1.181 (no fee) requesting withdrawal of the holding of abandonment in the above-identified application.

The petition pursuant to 37 C.F.R. §1.181 is **DISMISSED**.

Any request for reconsideration of this decision must be submitted within TWO (2) MONTHS from the mail date of this decision. Extensions of time under 37 C.F.R. §1.136(a) are permitted. The reconsideration request should include a cover letter entitled "Renewed Petition pursuant to 37 C.F.R. §1.181."

This is **not** a final agency action within the meaning of 5 U.S.C. §704.

As to the Request to Withdraw
the Holding of Abandonment

Petitioners always are directed to the Commentary at MPEP §711.03(c)(I) for guidance as to the proper showing requirements for relief pursuant to 37 C.F.R. §1.181.

Petitioner appears not to comply with the guidance in the Commentary at MPEP §711.03(c)(I)—as discussed below, Petitioner has failed to satisfy the showing requirements set forth there. Petitioner may find it beneficial to review that material and move step-wise through that guidance in the effort to satisfy the showing requirements (statements and supporting documentation).

BACKGROUND

The record reflects as follows:

Petitioner failed to reply timely and properly to the non-final Office action mailed on 13 April, 2011, with reply due absent extension of time (request and fee) on or before 13 July, 2011.

The application went abandoned by operation of law after midnight 13 July, 2011.

The Office mailed the Notice of Abandonment on 9 November, 2011.

On 9 January, 2011, having waited the entire two months allowed pursuant to the regulation, Petitioner submitted a petition pursuant to 37 C.F.R. §1.181 to withdraw the holding of abandonment. However, Petitioner failed to follow the narrative and document-submission requirements set forth in the guidance in the Commentary of the Manual of Patent Examining Procedure. Rather than following that guidance to track the language of the guidance (*e.g.*, as to the materials in question not being received at the correspondence address of record) and submit a docket sheet for the application and Petitioner's firm's due date calendar for the due date of the reply, Petitioner elected to submit dozens of pages of logs. Thus, Petitioner failed to satisfy the showing requirements set forth in the Commentary at MPEP §711.03(c)(I). Petitioner may find it beneficial to review that material and move step-wise through them.

With regard to Petitioner's request to withdraw the holding of abandonment pursuant to 37 C.F.R. §1.181, the guidance in the Commentary at MPEP §711.03(c)(I) provides in pertinent part as to nonreceipt:

***

> The showing required to establish nonreceipt of an Office communication must include a statement from the practitioner describing the system used for recording an Office action received at the correspondence address of record with the USPTO. The statement should establish that the docketing system is sufficiently reliable. It is expected that the record would include, but not be limited to, the application number, attorney docket number, the mail date of the Office action and the due date for the response.
>
> Practitioner must state that the Office action was not received at the correspondence address of record, and that a search of the practitioner's record(s), including any file jacket or the equivalent, and the application contents, indicates that the Office action was not received. A copy of the record(s) used by the practitioner where the non-received Office action would have been entered had it been received is required.
>
> A copy of the practitioner's record(s) required to show non-receipt of the Office action should include the master docket for the firm. That is, if a three month period for reply was set in the nonreceived Office action, a copy of the master docket report showing all replies docketed for a date three months from the mail date of the nonreceived Office

> action must be submitted as documentary proof of nonreceipt of the Office action. If no such master docket exists, the practitioner should so state and provide other evidence such as, but not limited to, the following: the application file jacket; incoming mail log; calendar; reminder system; or the individual docket record for the application in question.[1]
>
> ***

A Petitioner unable to comply with and/or otherwise satisfy these requirements may wish to revive the application: Petitioner may wish to properly file a petition to the Commissioner requesting revival of an application abandoned due to unintentional delay under 37 C.F.R. §1.137(b). (See: http://www.uspto.gov/web/offices/pac/mpep/documents/0700_711_03_c.htm#sect711.03c)

Out of an abundance of caution, Petitioners always are reminded that the filing of a petition under 37 C.F.R. §1.181 does not toll any periods that may be running any action by the Office and a petition seeking relief under the regulation must be filed within two (2) months of the act complained of (*see*: 37 C.F.R. §1.181(f)), and those registered to practice and all others who make representations before the Office **must** inquire into the underlying facts of representations made to the Office and support averments with the appropriate documentation–since all owe to the Office the continuing duty to disclose.[2]

The availability of applications and application papers online to applicants/practitioners who diligently associate their Customer Number with the respective application(s) now provides an applicant/practitioner on-demand information as to events/transactions in an application.

STATUTES, REGULATIONS

Congress has authorized the Commissioner to "revive an application if the delay is shown to the satisfaction of the Commissioner to have been "unavoidable." 35 U.S.C. §133 (1994). And the regulations at 37 C.F.R. §1.137(a) and (b) set forth the requirements for a Petitioner to revive a previously unavoidably or unintentionally, respectively, abandoned application.[3],[4]

---

[1] *See*: MPEP §711.03(c) (I)(A).

[2] See supplement of 17 June, 1999. The Patent and Trademark Office is relying on Petitioner's duty of candor and good faith and accepting a statement made by Petitioner. See Changes to Patent Practice and Procedure, 62 Fed. Reg. at 53160 and 53178, 1203 Off. Gaz. Pat. Office at 88 and 103 (responses to comments 64 and 109)(applicant obligated under 37 C.F.R. §11.18 (formerly 37 C.F.R. §10.18) to inquire into the underlying facts and circumstances when providing statements to the Patent and Trademark Office).

[3] See: Changes to Patent Practice and Procedure; Final Rule Notice, 62 Fed. Reg. at 53158-59 (October 10, 1997), 1203 Off. Gaz. Pat. Office at 86-87 (October 21, 1997).

[4] The language of 35 U.S.C. §133 and 37 C.F.R. §1.137(a) is clear, unambiguous, and without qualification: the delay in tendering the reply to the outstanding Office action, as well as filing the first petition seeking revival, must have been unavoidable for the reply now to be accepted on petition. (Therefore, by example, an unavoidable delay in the payment of the Filing Fee might occur if a reply is shipped by the US Postal Service, but due to catastrophic accident, the delivery is not made.) Delays in responding properly raise the question whether delays are unavoidable. Where there is a question whether the delay was unavoidable, Petitioners must meet the burden of establishing that the delay was unavoidable within the meaning of 35 U.S.C. §133 and 37 C.F.R. §1.137(a) And the Petitioner must be diligent in attending to the matter. Failure to do so does not constitute the care required under Pratt, and so cannot satisfy the test for diligence and due care. (By contrast,

Moreover, the Office has set forth in the Commentary at MPEP §711.03(c)(I) the showing and timeliness requirements for a proper showing for relief under 37 C.F.R. §1.181 in these matters.

Decisions on reviving abandoned applications on the basis of "unavoidable" delay have adopted the reasonably prudent person standard in determining if the delay was unavoidable:

> The word 'unavoidable' . . . is applicable to ordinary human affairs, and requires no more or greater care or diligence than is generally used and observed by prudent and careful men in relation to their most important business. It permits them in the exercise of this care to rely upon the ordinary and trustworthy agencies of mail and telegraph, worthy and reliable employees, and such other means and instrumentalities as are usually employed in such important business. If unexpectedly, or through the unforeseen fault or imperfection of these agencies and instrumentalities, there occurs a failure, it may properly be said to be unavoidable, all other conditions of promptness in its rectification being present.[5]

Allegations as to the Request to
Withdraw the Holding of Abandonment

The guidance in the Commentary at MPEP §711.03(c)(I) specifies the showing required and how it is to be made and supported.

As discussed above, Petitioner appears not to have made the showing required.

CONCLUSION

Accordingly, the petition pursuant to 37 C.F.R. §1.181 is **dismissed**.

ALTERNATIVE VENUE

Should Petitioner wish to revive the application, Petitioner may wish to properly file a petition to the Commissioner pursuant to 37 C.F.R. §1.137(b) requesting revival of an application abandoned due to unintentional delay. (See:
http://www.uspto.gov/web/offices/pac/mpep/documents/0700_711_03_c.htm#sect711.03c)

---

unintentional delays are those that do not satisfy the very strict statutory and regulatory requirements of unavoidable delay, and also, by definition, are not intentional.))

[5] In re Mattullath, 38 App. D.C. 497, 514-15 (1912)(quoting Ex parte Pratt, 1887 Dec. Comm'r Pat. 31, 32-33 (1887)); see also Winkler v. Ladd, 221 F. Supp. 550, 552, 138 USPQ 666, 167-68 (D.D.C. 1963), aff'd, 143 USPQ 172 (D.C. Cir. 1963); Ex parte Henrich, 1913 Dec. Comm'r Pat. 139, 141 (1913). In addition, decisions on revival are made on a "case-by-case basis, taking all the facts and circumstances into account." Smith v. Mossinghoff, 671 F.2d 533, 538, 213 USPQ 977, 982 (D.C. Cir. 1982). Finally, a petition cannot be granted where a petitioner has failed to meet his or her burden of establishing that the delay was "unavoidable." Haines v. Quigg, 673 F. Supp. 314, 316-17, 5 USPQ2d 1130, 1131-32 (N.D. Ind. 1987).

A petition to revive on the grounds of unintentional delay must be filed promptly and such petition must be accompanied by the reply, the petition fee, a terminal disclaimer and fee where appropriate and a statement that "the entire delay in filing the required reply from the due date for the reply until the filing of a grantable petition was unintentional." (The statement is in the form available online.)

In this connection, Petitioners are cautioned that the failure to file timely a petition pursuant to 37 C.F.R. §1.137(b) seeking to revive an application abandoned due to unintentional delay may be considered *indicia* of delay that is other than unintentional.

Further correspondence with respect to this matter should be addressed as follows:

By Mail:
Mail Stop PETITION
Commissioner for Patents
P. O. Box 1450
Alexandria, VA 22313-1450

By hand:
U. S. Patent and Trademark Office
Customer Service Window, Mail Stop Petitions
Randolph Building
401 Dulany Street
Alexandria, VA 22314

By facsimile:
(571) 273-8300
Attn: Office of Petitions

Telephone inquiries regarding this decision may be directed to the undersigned at (571) 272-3214—it is noted, however, that all practice before the Office is in writing (see: 37 C.F.R. §1.2[6]) and the proper authority for action on any matter in this regard are the statutes (35 U.S.C.), regulations (37 C.F.R.) and the commentary on policy (MPEP). Therefore, no telephone discussion may be controlling or considered authority for Petitioner's action(s).

/John J. Gillon, Jr./
John J. Gillon, Jr.
Senior Attorney
Office of Petitions

[6] The regulations at 37 C.F.R. §1.2 provide:

§1.2 Business to be transacted in writing.

All business with the Patent and Trademark Office should be transacted in writing. The personal attendance of applicants or their attorneys or agents at the Patent and Trademark Office is unnecessary. The action of the Patent and Trademark Office will be based exclusively on the written record in the Office. No attention will be paid to any alleged oral promise, stipulation, or understanding in relation to which there is disagreement or doubt.

UNITED STATES PATENT AND TRADEMARK OFFICE

Commissioner for Patents
United States Patent and Trademark Office
P.O. Box 1450
Alexandria, VA 22313-1450
www.uspto.gov

Patent No. : 8,113,162 B2
Ser. No. : 12/404,572
Inventor(s) : Sumiya et al.
Issued : Feb. 14, 2012
Title : CYLINDER HEAD COVER
Docket No. : P36291
Re: Request for Certificate of Correction

Consideration has been given your request for the issuance of a certificate of correction for the above-identified patent under the provisions of Rule(s) 1.322 and/or 1.323.

Assignees' names and addresses (assignment data) printed in a patent, are based *solely* on information supplied in the appropriate space for identifying the assignment data, i.e., item 3 of the Issue Fee Transmittal Form PTOL-85B. Granting of a request under 37 CFR 3.81(b) is required to correct applicant's error providing ***incorrect or erroneous*** assignment data, *before* issuance of a Certificate of Correction, under 37 CFR 1.323 *(see Manual of Patent Examining Procedures (M.P.E.P) Chp.1400, sect. 1481).* This procedure is required *at any time after the issue fee is paid*, including after issuance of the patent.

In view of the foregoing, your request, in this matter, is hereby denied.

A request to correct the Assignee under 37 CFR 3.81(b) should include:

A. **the processing fee set forth in 37 CFR 1. 17(i) (currently $130);**
B. a statement that the failure to include the correct assignee name on the PTOL-85B was inadvertent; and
C. a copy of the Notice of Recordation of Assignment Document, reflecting the reel and frame number where the assignment(s) is recorded and/or reflecting proof of *the date* the assignment was submitted for recordation.

In the Request, Applicant(s) may request that the file be forwarded to Certificates of Correction Branch, for issuance of a Certificate of Correction, if the Request is granted.

Any request under 37 CFR 3.81(b) should be directed to the following address or facsimile number:

By mail: Mail Stop PETITIONS
Commissioner for Patents
Post Office Box 1450
Alexandria, VA 22313-1450

By hand: Customer Service Window
Mail Stop Petitions
Randolph Building
401 Dulany Street
Alexandria, VA 22314

By fax: (703) 872-9306
ATTN: Office of Petitions

If a fee (currently $100) was previously submitted for consideration of a Request for Certificate of Correction, under CFR 1.323, to correct assignment data, no additional fee is required.

Ennis Young
For Mary Diggs
Decisions & Certificates
of Correction Branch
(571) **272-3435** or (703) 756-1814

UNITED STATES PATENT AND TRADEMARK OFFICE

Commissioner for Patents
United States Patent and Trademark Office
P.O. Box 1450
Alexandria, VA 22313-1450
www.uspto.gov

GREENBLUM & BERNSTEIN, P.L.C.
1950 ROLAND CLARKE PLACE
RESTON VA 20191

MAILED

APR 11 2012

OFFICE OF PETITIONS

In re Patent No. 8,113,162 :
Issue Date: February 14, 2012 :
Application No. 12/404,572 : ON PETITION
Filed: March 16, 2009 :
Attorney Docket No. P36291 :
:

This is in response to the REQUEST FOR RECONSIDERATION OF REQUEST FOR CERTIFICATE OF CORRECTION UNDER 37 C.F.R. §1.323 and REQUEST FOR RECONSIDERATION OF PETITION & REQUEST FOR CORRECTION OF THE NAME OF THE ASSIGNEE UNDER 37 C.F.R. §3.81(b) filed March 13, 2012, which is being treated as a request under 37 CFR 3.81(b)[1] to correct the name of the assignee on the front page of the above-identified patent by way of a Certificate of Correction.

The request is **GRANTED**.

By decision mailed February 21, 2012, a prior REQUEST FOR A CERTIFICATE OF CORRECTION first filed February 2, 2012 was dismissed. The request included a Request for Certification of Correction Under 37 CFR 1.323 and the fee set forth in 37 CFR 1.20(a) for issuance of a certificate of correction and an authorization to charge any other required fees. The Certificates of Correction Branch and not the Office of Petitions considered the prior request.

On March 13, 2012, petitioner submitted their request for reconsideration and it was directed to the Office of Petitions for decision. A review of the record reveals that "Toyota Boshoku Kabushiki Kaisha" and "Oyota Jidosha Kabaushiki Kaisha," were named as the assignees on the form PTOL-85B. Petitioner states that the name of the second assignee was misspelled. Petitioner requests in the above-identified patent that the name

[1] *See* MPEP 1309, subsection II, Official Gazette at 1283 OG 148 (June 22, 2004) or Final Register at 69 FR 29865 (May 26, 2004).

be corrected to "Toyota Jidosha Kabaushiki Kaisha" and requests that a Certificate of Correction be issued with the correct spelling of this assignee's name. On February 2, 2012, Petitioner submitted a "Certificate of Correction" for this purpose.

Both petitioner's evidence and Office records show that the spelling of the second assignee's name is correctly beginning with "Toyota" and not "Oyota," as misspelled on the issue fee transmittal. This was recorded in the Office on June 5, 2009 before issuance of the patent (Reel/Frame 022788/0007) on February 14, 2012. This was also prior to payment of the Issue Fee on January 11, 2012.

Receipt of the required $100 certificate of correction fee and the $130 processing fee received February 2, 2012.

Telephone inquiries concerning this decision may be directed to the undersigned at (571) 272-3219. Inquiries regarding the issuance of a certificate of correction should be directed to the Certificate of Correction Branch at (571) 272-4200.

The Certificates of Correction Branch has been notified of this decision granting the petition under 37 CFR 3.81(b) and directing issuance of the requested Certificate of Correction.

Nancy Johnson
Senior Petitions Attorney
Office of Petitions

UNITED STATES PATENT AND TRADEMARK OFFICE

UNITED STATES DEPARTMENT OF COMMERCE
United States Patent and Trademark Office
Address: COMMISSIONER FOR PATENTS
P.O. Box 1450
Alexandria, Virginia 22313-1450
www.uspto.gov

APPLICATION NO.	FILING DATE	FIRST NAMED INVENTOR	ATTORNEY DOCKET NO.	CONFIRMATION NO.
12/404,624	03/16/2009	Toshifumi YAMAKAWA	12699/123	2107

23838 7590 05/24/2011

KENYON & KENYON LLP
1500 K STREET N.W.
SUITE 700
WASHINGTON, DC 20005

EXAMINER	
CHAN, KAWING	
ART UNIT	PAPER NUMBER
2837	
MAIL DATE	DELIVERY MODE
05/24/2011	PAPER

Please find below and/or attached an Office communication concerning this application or proceeding.

The time period for reply, if any, is set in the attached communication.

UNITED STATES PATENT AND TRADEMARK OFFICE

Commissioner for Patents
United States Patent and Trademark Office
P.O. Box 1450
Alexandria, VA 22313-1450
www.uspto.gov

KENYON & KENYON LLP
1500 K STREET N.W.
SUITE 700
WASHINGTON DC 20005

In re Application of
YAMAKAWA et al.
Application No.: 12/404,624
Filed: 16 March 2009
Attorney Docket No.: 12699/123
For: MOTOR DRIVE CONTROL APPARATUS ...

: DECISION ON REQUEST TO
: PARTICIPATE IN THE PATENT
: PROSECUTION HIGHWAY
: PROGRAM AND PETITION
: TO MAKE SPECIAL UNDER
: 37 CFR 1.102(a)

This is a decision on the request to participate in the Patent Prosecution Highway (PPH) program and the petition under 37 CFR 1.102(a), filed 09 May 2011, to make the above-identified application special.

The request and petition are **DISMISSED**.

A grantable request to participate in the PPH program and petition to make special require:

1. The U.S. application must validly claim priority under 35 U.S.C. 119(a) to one or more applications filed in the JPO, note where the JPO application with similar claims is not the same application from which the U.S. application claims priority then the applicant must identify the relationship between the JPO application with similar claims and the JPO priority application;

2. Applicant must submit a copy of:
   a. The allowable/patentable claim(s) from the JPO application(s) or if a copy of the allowable/patentable claims is available via the Dossier Access System (DAS) applicant may request the USPTO obtain a copy from the DAS, however if the USPTO is unable to obtain a copy from the DAS the applicant will be required to submit a copy;
   b. An English translation of the allowable/patentable claim(s) and
   c. A statement that the English translation is accurate;

3. Applicant must
   a. Ensure all the claims in the U.S. application must sufficiently correspond or be amended to sufficiently correspond to the allowable/patentable claim(s) in the JPO application(s) and

b. Submit a claims correspondence table in English;

4. Examination of the U.S. application has not begun;

5. Applicant must submit:
   a. Documentation of prior office action:
      i. a copy of the office action(s) just prior to the "Decision to Grant a Patent" from each of the JPO application(s) containing the allowable/patentable claim(s) or
      ii. if the allowable/patentable claims(s) are from a "Notification of Reasons for Refusal" then the Notification of Reasons for Refusal or
      iii. if the JPO application is a first action allowance then no office action from the JPO is necessary should be indicated on the request/petition form;

      Further, if a copy of the documents from a or b above is available via the Dossier Access System (DAS) applicant may request the USPTO obtain a copy from the DAS, however if the USPTO is unable to obtain a copy from the DAS the applicant will be required to submit a copy;
   b. An English language translation of the JPO Office action from (5)(a)(i)-(ii) above
   c. A statement that the English translation is accurate (if the translation is not a machine translation provided by the JPO);

6. Applicant must submit:
   a. An IDS listing the documents cited by the JPO examiner in the JPO office action (unless already submitted in this application)
   b. Copies of the documents except U.S. patents or U.S. patent application publications (unless already submitted in this application);

Conditions (1-5) above are considered to have been met. However, the request to participate in the PPH pilot program and petition fails meet condition (6).

Regarding the requirement of condition (6), applicant has failed to submit an IDS listing all the documents cited by the JPO examiner in the JPO office action and provide a copy of the reference. Specifically, applicant has failed to cite and submit a copy of JP 2002-256920.

Applicant is given **ONE** opportunity within a time period of **ONE MONTH or THIRTY DAYS**, whichever is longer, from the mailing date of this decision to correct the deficiencies. **NO EXTENSION OF TIME UNDER 37 CFR 1.136 IS PERMITTED.** If the deficiencies are not corrected with the time period given, the application will await action in its regular turn.

Response must be filed via the Electronic Filing System (EFS) using the document description: Petition to make special under Patent Pros Hwy. Any preliminary amendments and IDS submitted with the PPH documents must be separately indexed as a preliminary amendment and IDS, respectively.

Telephone inquiries concerning this decision should be directed to Lee W. Young at 571-272-4549.

All other inquiries concerning the examination or status of the application is accessible in the PAIR system at http://www.uspto.gov/ebc/index.html.

Lee W. Young
TQAS Technology Center 2800

UNITED STATES PATENT AND TRADEMARK OFFICE

UNITED STATES DEPARTMENT OF COMMERCE
United States Patent and Trademark Office
Address: COMMISSIONER FOR PATENTS
P.O. Box 1450
Alexandria, Virginia 22313-1450
www.uspto.gov

APPLICATION NO.	FILING DATE	FIRST NAMED INVENTOR	ATTORNEY DOCKET NO.	CONFIRMATION NO.
12/404,624	03/16/2009	Toshifumi YAMAKAWA	12699/123	2107

23838 7590 06/07/2011

KENYON & KENYON LLP
1500 K STREET N.W.
SUITE 700
WASHINGTON, DC 20005

EXAMINER
CHAN, KAWING

ART UNIT	PAPER NUMBER
2837	

MAIL DATE	DELIVERY MODE
06/07/2011	PAPER

Please find below and/or attached an Office communication concerning this application or proceeding.

The time period for reply, if any, is set in the attached communication.

UNITED STATES PATENT AND TRADEMARK OFFICE

Commissioner for Patents
United States Patent and Trademark Office
P.O. Box 1450
Alexandria, VA 22313-1450
www.uspto.gov

KENYON & KENYON LLP
1500 K STREET N.W.
SUITE 700
WASHINGTON DC 20005

In re Application of
YAMAKAWA et al.
Application No.: 12/404,624
Filed: 16 March 2009
Attorney Docket No.: 12699/123
For: MOTOR DRIVE CONTROL APPARATUS ...

: DECISION ON REQUEST TO
: PARTICIPATE IN THE PATENT
: PROSECUTION HIGHWAY
: PROGRAM AND PETITION
: TO MAKE SPECIAL UNDER
: 37 CFR 1.102(a)

This is a decision on the request to participate in the Patent Prosecution Highway (PPH) program and the petition under 37 CFR 1.102(a), filed 09 May 2011 and renewed on 31 May 2011, to make the above-identified application special.

The request and petition are **GRANTED**.

Discussion

A grantable request to participate in the PPH pilot program and petition to make special require:

1. The U.S. application is
    a. a Paris Convention application which either
        i. validly claims priority under 35 U.S.C. 119(a) and 37 CFR 1.55 to one or more applications filed in the JPO, or
        ii. validly claims priority to a PCT application that contains no priority claims, or
    b. a national stage application under the PCT (an application which entered the national stage in the U.S. from a PCT international application after compliance with 35 U.S.C. 371), which PCT application
        i. validly claims priority to an application filed in the JPO, or
        ii. validly claims priority to a PCT application that contains no priority claims, or
        iii. contains no priority claim, or
    c. a so-called bypass application filed under 35 U.S.C. 111(a) which validly claims benefit under 35 U.S.C. 120 to a PCT application, which PCT application
        i. validly claims priority to an application filed in the JPO, or
        ii. validly claims priority to a PCT application that contains no priority claims, or

iii. contains no priority claim;

2. Applicant must submit a copy of:
    a. The allowable/patentable claim(s) from the JPO application(s);
    b. An English translation of the allowable/patentable claim(s) and
    c. A statement that the English translation is accurate;
3. Applicant must:
    a. Ensure all the claims in the U.S. application must sufficiently correspond or be amended to sufficiently correspond to the allowable/patentable claim(s) in the JPO application(s) and
    b. Submit a claims correspondence table in English;
4. Examination of the U.S. application has not begun;
5. Applicant must submit:
    a. Documentation of prior office action:
        i. a copy of the office action(s) just prior to the "Decision to Grant a Patent" from each of the JPO application(s) containing the allowable/patentable claim(s) or
        ii. if the allowable/patentable claims(s) are from a "Notification of Reasons for Refusal" then the Notification of Reasons for Refusal or
        iii. if the JPO application is a first action allowance then no office action from the JPO is necessary should be indicated on the request/petition form;
    b. An English language translation of the JPO Office action from (5)(a)(i)-(ii) above
    c. A statement that the English translation is accurate;
6. Applicant must submit:
    a. An IDS listing the documents cited by the JPO examiner in the JPO office action (unless already submitted in this application)
    b. Copies of the documents except U.S. patents or U.S. patent application publications (unless already submitted in this application);

The request to participate in the PPH pilot program and petition comply with the above requirements. Accordingly, the above-identified application has been accorded "special" status.

Inquiries concerning this decision should be directed to Lee W. Young at 571-272-4549.

All other inquiries concerning the examination or status of the application is accessible in the PAIR system at http://www.uspto.gov/ebc.index.html.

This application will be forwarded to the examiner for action on the merits commensurate with this decision once this application's formality reviews have been completed.

Lee W. Young
TQAS, Technology Center 2800 – Semiconductors
Electrical & Optical Systems & Components

UNITED STATES PATENT AND TRADEMARK OFFICE

Commissioner for Patents
United States Patent and Trademark Office
P. O. Box 1450
Alexandria, VA 22313-1450
www.uspto.gov

BUCHALTER NEMER
18400 VON KARMAN AVE.
SUITE 800
IRVINE CA 92612

MAILED

NOV 22 2011

OFFICE OF PETITIONS

In re Application of	:	
Jerry Moon	:	
Application No. 12/404,659	:	ON PETITION
Filed: March 16, 2009	:	
Attorney Docket No. 03251-0105	:	

This is a decision on the petition under 37 CFR 1.137(b), filed November 8, 2011, to revive the above-identified application.

The petition is **GRANTED.**

The above-identified application became abandoned for failure to reply in a timely manner to the non-final Office action mailed March 4, 2011, which set a shortened statutory period for reply of three (3) months. No extension of time under the provisions of 37 CFR 1.136(a) was obtained. Accordingly, the above-identified application became abandoned on June 5, 2011.

Telephone inquiries concerning this decision should be directed to Irvin Dingle at (571) 272-3210.

This matter is being referred to Technology Center AU 2841 for further processing.

Irvin Dingle
Petitions Examiner
Office of Petitions

UNITED STATES PATENT AND TRADEMARK OFFICE

Commissioner for Patents
United States Patent and Trademark Office
P.O. Box 1450
Alexandria, VA 22313-1450
www.uspto.gov

MAILED
MAR 12 2012
OFFICE OF PETITIONS

FITZPATRICK CELLA HARPER & SCINTO
1290 Avenue of the Americas
NEW YORK NY 10104-3800

In re Patent No. 7,841,239 :
Issued: November 30, 2010 :
Application No. 12/404,720 : DECISION ON PETITION
Filed: March 16, 2009 :
Atty. Dkt. No. 03595.002400. :

This is a decision on the petition, filed, March 1, 2012, which is being treated as a request under 37 CFR 3.81(b)[1] to correct the assignee's name and residence on the Letters Patent by way of a certificate of correction in the above-identified patent.

The request is GRANTED.

Telephone inquiries concerning this decision may be directed to the undersigned at (571) 272-3205. Inquiries regarding the issuance of a certificate of correction should be directed to the Certificate of Correction Branch at (571) 272-4200.

The Certificates of Correction Branch will be notified of this decision granting the petition under 37 CFR 3.81(b) and directing issuance of the requested Certificate of Correction.

/ALESIA M. BROWN/

Alesia M. Brown
Attorney Advisor
Office of Petitions

[1] See, MPEP 1309, subsection II; and Official Gazette of June 22, 2004.

Claims which were indicated as having novelty, inventive step and industrial applicability in the corresponding PCT application (PCT/US09/37258)

1. A method for quantifying and using virtual travel mileage, comprising:

automatically collecting, by a conference scheduling device, call detail records of a conferencing session from a collaborative multipoint conference unit;

associating the call detail records to one or more of a plurality of conference attendees in the conferencing session;

converting the call detail records associated with said one or more of a plurality of conference attendees into mileage credit; and

establishing rewards to said one or more of a plurality of conference attendees based on the mileage credit.

2. The method of claim 1, wherein the step of converting and the step of establishing are performed in a computer server separated from said conference scheduling device and said collaborative multipoint conference unit.

3. The method of claim 2, wherein said computer server maintains a database of accounts including mileage credit information for a plurality of users conducting conferencing sessions over a plurality of conference scheduling devices and a plurality of collaborative multipoint conference units.

4. The method of claim 3, wherein said computer server automatically receives said call detail records from said plurality of conference scheduling devices.

5. The method of claim 4, further including:

presenting said mileage credit, rewards, or combinations thereof to a user.

6. The method of claim 4, further including:

presenting said mileage credit, rewards, or combinations thereof via a web page.

7. The method of claim 4, further including:

providing reports periodically of said mileage credit, rewards, or combinations thereof.

8. The method of claim 1, further including:

determining carbon credits earned by an employer of said one or more of a plurality of conference attendees.

9. A method for quantifying and using virtual travel mileage, comprising:

automatically collecting data associated with a conferencing session by a computer communicating with a collaborative conferencing device, said data including at least call detail records of the conferencing session;

converting said collected data into mileage credits; and

establishing rewards in exchange with said mileage credits.

10. The method of claim 9, wherein the step of converting includes converting said collected data into carbon credits.

11. A program storage device readable by a machine, tangibly embodying a program of instructions executable by the machine to perform a method of quantifying and using virtual travel mileage, comprising:

automatically collecting data associated with a conferencing session, said data including at least call detail records of the conferencing session;

converting said collected data into mileage credits;

establishing rewards in exchange with said mileage credits.

12. The program storage device of claim 11, wherein the step of converting includes converting said collected data into carbon credits.

13. A program storage device readable by a machine, tangibly embodying a program of instructions executable by the machine to perform a method of quantifying and using virtual travel mileage, comprising:

automatically collecting, by a conference scheduling device, call detail records of a conferencing session from a collaborative multipoint conference unit;

associating the call detail records to one or more of a plurality of conference attendees in the conferencing session;

converting the call detail records associated with said one or more of a plurality of conference attendees into mileage credit; and

establishing rewards to said one or more of a plurality of conference attendees based on the mileage credit.

14. The program storage device of claim 13, wherein the step of converting and the step of establishing are performed in a computer server separated from said conference scheduling device and said collaborative multipoint conference unit.

15. The program storage device of claim 14, wherein said computer server maintains a database of accounts including mileage credit information for a plurality of users conducting conferencing sessions over a plurality of conference scheduling devices and a plurality of collaborative multipoint conference units.

16. The program storage device of claim 15, wherein said computer server automatically receives said call detail records from said plurality of conference scheduling devices.

17. The program storage device of claim 16, further including:

presenting said mileage credit, rewards, or combinations thereof to a user.

18. The program storage device of claim 16, further including:

presenting said mileage credit, rewards, or combinations thereof via a web page.

19. The method of claim 16, further including:

providing reports periodically of said mileage credit, rewards, or combinations thereof.

20. A system for quantifying and using virtual travel mileage, comprising:

one or more collaborative conference units operable to maintain a conferencing session;

one or more conference scheduling devices operable to automatically collect call detail records of a conferencing session from one or more of the collaborative conference units; and

a computer server operable to automatically receive data associated with said call detail records and convert the data into mileage credits.

21. The system of claim 20, wherein the computer server is further operable to convert the data into carbon credits.

22. The system of claim 20, wherein the computer server is further operable to associate the data with one or more of a plurality of conference attendees of the conferencing session and accrue mileage credit points for said one or more of a plurality of conference attendees.

23. The system of claim 22, wherein the computer server is further operable to establish rewards to at least one of said plurality of conference attendees based on the mileage points.

24. The system of claim 20, further including:

database storage operable to store said call detail records and user accounts associated with the plurality of conference attendees.

25. The system of claim 20, wherein the computer server further includes a web server operable to maintain a web site for allowing said plurality of conference attendees to view information associated with the mileage credit and the rewards.

Doc Code: PPH.PCT.652
Document Description: Petition to make special under PCT-Patent Pros Hwy

PTO/SB/20PCT-KR (06-10)
Approved for use through 01/31/2012. OMB 0651-0058
U.S. Patent and Trademark Office; U. S. DEPARTMENT OF COMMERCE
Under the Paperwork Reduction Act of 1995, no persons are required to respond to a collection of information unless it displays a valid OMB control number.

REQUEST FOR PARTICIPATION IN THE PATENT COOPERATION TREATY - PATENT PROSECUTION HIGHWAY (PCT-PPH) PILOT PROGRAM BETWEEN THE KOREAN INTELLECTUAL PROPERTY OFFICE (KIPO) AND THE USPTO

Application No:	12/404,726	Filing date:	03-16-2009
First Named Inventor:	Larry E. Roher		
Title of the Invention:	SYSTEM AND METHOD FOR QUANTIFYING AND USING VIRTUAL TRAVEL MILEAGE		

THIS REQUEST FOR PARTICIPATION IN THE PCT-PPH PILOT PROGRAM ALONG WITH THE REQUIRED DOCUMENTS MUST BE SUBMITTED VIA EFS-WEB. INFORMATION REGARDING EFS-WEB IS AVAILABLE AT HTTP://WWW.USPTO.GOV/EBC/EFS_HELP.HTML

APPLICANT HEREBY REQUESTS PARTICIPATION IN THE PCT-PPH PROGRAM AND PETITIONS TO MAKE THE ABOVE-IDENTIFIED APPLICATION SPECIAL UNDER THE PCT-PPH PROGRAM.

The above-identified application is (1) a national stage entry of the corresponding PCT application, or (2) a national stage entry of another PCT application which claims priority to the corresponding PCT application, or (3) a national application that claims domestic/ foreign priority to the corresponding PCT application, or (4) a national application which forms the basis for the priority claim in the corresponding PCT application, or (5) a continuing application of a U.S. application that satisfies one of (1) to (4) above, or (6) a U.S. application that claims domestic benefit to a U.S. provisional application which forms the basis for the priority claim in the corresponding PCT application.

The corresponding PCT application number(s) is/are: PCT/US09/37258

The international date of the corresponding PCT application(s) is/are: 03-16-2009

I. List of Required Documents:

a. **A copy of the latest international work product (WO/ISA, WO/IPEA, or IPER) in the above–identified corresponding PCT application(s)**

☑ Is attached.

☐ Is not attached because the document is already in the U.S. application.

b. **A copy of all claims which were indicated as having novelty, inventive step and industrial applicability in the above-identified corresponding PCT application(s).**

☑ Is attached.

☐ Is not attached because the document is already in the U.S. application.

c. **English translations of the documents in a. and b. above are attached (if the documents are not in the English language). A statement that the English translation is accurate is attached for the document in b. above.**

This collection of information is required by 35 U.S.C. 119, 37 CFR 1.55, and 37 CFR 1.102(d). The information is required to obtain or retain a benefit by the public, which is to file (and by the USPTO to process) an application. Confidentiality is governed by 35 U.S.C. 122 and 37 CFR 1.11 and 1.14. This collection is estimated to take 2 hours to complete, including gathering, preparing, and submitting the completed application form to the USPTO. Time will vary depending upon the individual case. Any comments on the amount of time you require to complete this form and/or suggestions for reducing this burden should be sent to the Chief Information Officer, U.S. Patent and Trademark Office, U.S. Department of Commerce, P.O. Box 1450, Alexandria, VA 22313-1450. DO NOT SEND FEES OR COMPLETED FORMS TO THIS ADDRESS.

REQUEST FOR PARTICIPATION IN THE PCT-PPH PILOT PROGRAM BETWEEN THE KIPO AND THE USPTO

(continued)

Application No.:	12/404,726
First Named Inventor:	Larry E. Roher

d. **(1) An information disclosure statement listing the documents cited in the international work products (ISR, WO/ISA, WO/IPEA, IPER) of the corresponding PCT application.**

☐ Is attached

☒ Has already been filed in the above-identified U.S. application on September 30, 2009

(2) Copies of all documents (except) for U.S. patents or U.S. patent application publications)

☒ Are attached.

Have already been filed in the above-identified U.S. application on September 30, 2009

II. Claims Correspondence Table:

Claims in US Application	Patentable Claims in the corresponding PCT Application	Explanation regarding the correspondence
1-25	1-25	Claims are identical

III. All the claims in the US application sufficiently correspond to the patentable claims in the corresponding PCT application.

Signature /Eunhee Park/	Date 11/16/2010
Name (Print/Typed) Eunhee Park	Registration Number 42976

Privacy Act Statement

The **Privacy Act of 1974 (P.L. 93-579)** requires that you be given certain information in connection with your submission of the attached form related to a patent application or patent. Accordingly, pursuant to the requirements of the Act, please be advised that: (1) the general authority for the collection of this information is 35 U.S.C. 2(b)(2); (2) furnishing of the information solicited is voluntary; and (3) the principal purpose for which the information is used by the U.S. Patent and Trademark Office is to process and/or examine your submission related to a patent application or patent. If you do not furnish the requested information, the U.S. Patent and Trademark Office may not be able to process and/or examine your submission, which may result in termination of proceedings or abandonment of the application or expiration of the patent.

The information provided by you in this form will be subject to the following routine uses:

1. The information on this form will be treated confidentially to the extent allowed under the Freedom of Information Act (5 U.S.C. 552) and the Privacy Act (5 U.S.C 552a). Records from this system of records may be disclosed to the Department of Justice to determine whether disclosure of these records is required by the Freedom of Information Act.
2. A record from this system of records may be disclosed, as a routine use, in the course of presenting evidence to a court, magistrate, or administrative tribunal, including disclosures to opposing counsel in the course of settlement negotiations.
3. A record in this system of records may be disclosed, as a routine use, to a Member of Congress submitting a request involving an individual, to whom the record pertains, when the individual has requested assistance from the Member with respect to the subject matter of the record.
4. A record in this system of records may be disclosed, as a routine use, to a contractor of the Agency having need for the information in order to perform a contract. Recipients of information shall be required to comply with the requirements of the Privacy Act of 1974, as amended, pursuant to 5 U.S.C. 552a(m).
5. A record related to an International Application filed under the Patent Cooperation Treaty in this system of records may be disclosed, as a routine use, to the International Bureau of the World Intellectual Property Organization, pursuant to the Patent Cooperation Treaty.
6. A record in this system of records may be disclosed, as a routine use, to another federal agency for purposes of National Security review (35 U.S.C. 181) and for review pursuant to the Atomic Energy Act (42 U.S.C. 218(c)).
7. A record from this system of records may be disclosed, as a routine use, to the Administrator, General Services, or his/her designee, during an inspection of records conducted by GSA as part of that agency's responsibility to recommend improvements in records management practices and programs, under authority of 44 U.S.C. 2904 and 2906. Such disclosure shall be made in accordance with the GSA regulations governing inspection of records for this purpose, and any other relevant (*i.e.*, GSA or Commerce) directive. Such disclosure shall not be used to make determinations about individuals.
8. A record from this system of records may be disclosed, as a routine use, to the public after either publication of the application pursuant to 35 U.S.C. 122(b) or issuance of a patent pursuant to 35 U.S.C. 151. Further, a record may be disclosed, subject to the limitations of 37 CFR 1.14, as a routine use, to the public if the record was filed in an application which became abandoned or in which the proceedings were terminated and which application is referenced by either a published application, an application open to public inspection or an issued patent.
9. A record from this system of records may be disclosed, as a routine use, to a Federal, State, or local law enforcement agency, if the USPTO becomes aware of a violation or potential violation of law or regulation.

UNITED STATES PATENT AND TRADEMARK OFFICE

UNITED STATES DEPARTMENT OF COMMERCE
United States Patent and Trademark Office
Address: COMMISSIONER FOR PATENTS
P.O. Box 1450
Alexandria, Virginia 22313-1450
www.uspto.gov

APPLICATION NO.	FILING DATE	FIRST NAMED INVENTOR	ATTORNEY DOCKET NO.	CONFIRMATION NO.
12/404,726	03/16/2009	Larry E. Roher	22526	2279

23389 7590 01/24/2011

SCULLY SCOTT MURPHY & PRESSER, PC
400 GARDEN CITY PLAZA
SUITE 300
GARDEN CITY, NY 11530

EXAMINER	
FEENEY, BRETT A	

ART UNIT	PAPER NUMBER
3624	

MAIL DATE	DELIVERY MODE
01/24/2011	PAPER

Please find below and/or attached an Office communication concerning this application or proceeding.

The time period for reply, if any, is set in the attached communication.

UNITED STATES PATENT AND TRADEMARK OFFICE

Commissioner for Patents
United States Patent and Trademark Office
P.O. Box 1450
Alexandria, VA 22313-1450
www.uspto.gov

JAN 2 4 2011

SCULLY SCOTT MURPHY & PRESSER, PC
400 GARDEN CITY PLAZA
SUITE 300
GARDEN CITY NY 11530

In re application of:	:	**DECISION ON REQUEST TO**
ROHER, Larry E., et al.	:	**PARTICIPATE IN PATENT**
Application No.: 12/404,726	:	**PROSECUTION HIGHWAY**
Filed: March 16, 2010	:	**PROGRAM AND PETITION**
For: SYSTEM AND METHOD FOR QUANTIFYING AND USING VIRTUAL TRAVEL MILEAGE	:	**TO MAKE SPECIAL UNDER 37 C.F.R. 1.102(d)**

This is a decision on the request for reconsideration filed November 16, 2010 to participate in the pilot Patent Prosecution Highway (PPH) program between the USPTO and the KIPO based on PCT treaty work products and the petition under 37 C.F.R. § 1.102(d), to make the above-identified application special.

The request and petition are **GRANTED**.

A grantable request to participate in this PPH pilot program and petition to make special require (see 1355 OG 319):

> (1) The relationship between the corresponding U.S. application for which participation in the PCT-PPH pilot program is requested and the PCT application satisfies one of the following requirements:
>
> (a) The U.S. application is a national stage entry of the corresponding PCT application.
>
> (b) The U.S. application is a national application which forms the basis for the priority claim in the corresponding PCT application.
>
> (c) The U.S. application is a national stage entry of another PCT application (which can be filed in any competent receiving office) which claims priority to the corresponding PCT application.
>
> (d) The U.S. application is a national application claiming foreign/domestic priority to the corresponding PCT application.
>
> (e) The U.S. application is a continuing application (continuation, divisional, or continuation-in-part) of the U.S. application which satisfies one of the above (a) through (d) scenarios.

2) The latest work product in the international phase of the PCT application corresponding to the U.S. application, namely, the WO/ISA, or the WO/IPEA, or the IPER, indicates at least one claim in the PCT application has novelty, inventive step and industrial applicability. In case any observation is described in Box VIII of the WO/ISA, WO/IPEA, or IPER which forms the basis for the PCT-PPH request, applicant must identify and explain why the claim(s) is/are not subject to any observation described in Box VIII irrespective of whether an amendment is submitted to correct the observation described in Box VIII. The U.S. application will not be eligible to participate in the PCT-PPH pilot program if applicant does not identify and explain why the claim(s) is/are not subject to the observation described in Box VIII.

(3) Claim Correspondence:

(a) All of the claims in each U.S. application for which a request for participation in the PCT-PPH pilot program is made must sufficiently correspond to or be amended to sufficiently correspond to one or more of those claims indicated as having novelty, inventive step and industrial applicability and be free of any observation described in Box VIII in the latest work product of the corresponding PCT application.

(b) Claims are considered to "sufficiently correspond" where, accounting for differences due to translations and claim format requirements, the claims in the U.S. application are of the same or similar scope as the claims indicated as having novelty, inventive step and industrial applicability and free of any observation described in Box VIII in the latest work product of the corresponding PCT application, or the claims in the U.S. application are narrower in scope than the claims indicated as having novelty, inventive step and industrial applicability and free of any observation described in Box VIII in the latest work product of the corresponding PCT application.

(c) In this regard, a claim that is narrower in scope occurs when a claim indicated as having novelty, inventive step and industrial applicability and free of any observation described in Box VIII in the latest work product of the corresponding PCT application is amended to be further limited by an additional feature that is supported in the written description of the U.S. application. The claim(s) with the narrower scope must be written in dependent form in the U.S. application for which participation in the PCT-PPH pilot program is requested.

(4) Substantive examination of the U.S. application for which participation in the PCT-PPH pilot program is requested has not begun.

(5) Applicant must file a request for participation in the PCT-PPH pilot program and a request that the U.S. application be advanced out of turn for examination by order of the Director to expedite the business of the Office under 37 CFR 1.102(a).

(6) Unless already filed in the U.S. application for which participation in the PCT-PPH pilot program is requested, applicant must submit a copy of the latest international work product, WO/ISA, or WO/IPEA or IPER, which indicated that the claim(s) has/have novelty, inventive step and industrial applicability along with an English translation thereof if the copy of the latest international work product is not in the English language. A statement that the English translation is accurate is not required. Where the required documents have been previously filed in the U.S. application, applicant may simply refer to these documents and indicate in the request for participation in the PCT-PPH pilot program when these documents were previously filed in the U.S. application. Where the U.S. application and the corresponding PCT application satisfy the relationship noted in (1)(a) above, applicant need not submit a copy of the latest international work product along with an English translation thereof since a copy of these documents is already contained in the file wrapper of the U.S. application.

(7) Unless already filed in the U.S. application for which participation in the PCT-PPH pilot program is requested, applicant must submit a copy of the claims from the corresponding PCT application which were indicated as having novelty, inventive step and industrial applicability in the latest work product of the PCT application along with an English translation thereof and a statement that the English translation is accurate if the claims are not in the English language. Where the required documents have been previously filed in the U.S. application, applicant may simply refer to these documents and indicate in the request for participation in the PCT-PPH pilot program when these documents were previously filed in the U.S. application. If the claims in the U.S. application for which participation in the PCT-PPH pilot program is requested are identical to the claims from the corresponding PCT application, and are in the English language, applicant may just indicate such in the PCT-PPH request and it will not be necessary for applicant to submit a copy of the claims from the corresponding PCT application.

(8) Applicant is required to submit a claims correspondence table in English. The claims correspondence table must indicate how all the claims in the U.S. application sufficiently correspond to the claims indicated as having novelty, inventive step and industrial applicability in the latest international work product.

(9) Applicant must submit an information disclosure statement (IDS) listing the documents cited in the international work products (ISR, WO/ISA, WO/IPEA, IPER) of the PCT application corresponding to the U.S. application for which participation in the PCT-PPH pilot program is requested (unless such an IDS has already been filed in the U.S. application, in which case applicant may simply refer to the previously filed

IDS and indicate in the request for participation in the PCT-PPH pilot program when the IDS was previously filed in the U.S. application). Applicant must submit copies of all the documents cited in the international work products of the PCT application corresponding to the U.S. application (unless the copies have already been filed in the U.S. application, in which case applicant may simply refer to the previously filed copies of the documents and indicate in the request for participation in the PCT-PPH pilot program when the copies were previously filed in the U.S. application) except U.S. patents or U.S. patent application publications.

(10) The request for participation in the PCT-PPH pilot program and all the supporting documents must be submitted to the USPTO via EFS-Web and indexed with the following document description: "Petition to make special under PCT-Patent Pros Hwy."

In light of the petition and supporting documents filed November 16, 2010, the request to participate in the PPH program complies with the above requirements and the above identified application has been accorded "special" status.

The application is being forwarded to the examiner for action on the merits commensurate with this decision.

Any inquiry regarding this decision should be directed to Robert Weinhardt, Business Practice Specialist, at (571) 272-6633.

All other queries concerning the examination or status of the application should be directed to the Patent Application Information Retrieval (PAIR) system or the examiner of record in the application.

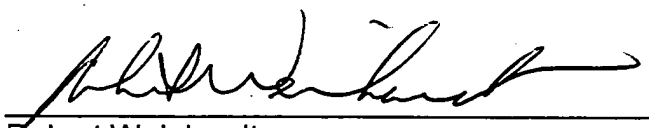

Robert Weinhardt
Business Practice Specialist
Technology Center 3600

RW/1/23/11

UNITED STATES PATENT AND TRADEMARK OFFICE

Commissioner for Patents
United States Patent and Trademark Office
P.O. Box 1450
Alexandria, VA 22313-1450
www.uspto.gov

STAAS & HALSEY LLP
SUITE 700
1201 NEW YORK AVENUE, N.W.
WASHINGTON DC 20005

MAILED

SEP 07 2010

OFFICE OF PETITIONS

In re Application of :
Masashi Endo :
Application No. 12/404,731 : DECISION ON REQUEST FOR REFUND
Filed: March 16, 2009 :
Attorney Docket No. 0221.1297 :

This is a decision on the Request For Refund filed April 26, 2010.

The request is **DISMISSED**.

Applicant requests a refund of the filing fees for the above application and asserts that the filing fees were previously debited on March 17, 2009. However, a review of Office finance records for the **above-identified application** indicates that the filing fees were only charged once.

Applicant is encouraged to note the below regarding the filing of a petition under 37 CFR 1.181(no fee) for an unintended duplicate filings via EFS-Web:

37 CFR 1.26(a) states, in part: "The Director may refund any fee paid by mistake or in excess of that required. A change of purpose after the payment of a fee, such as when a party desires to withdraw a patent filing for which the fee was paid, including an application, an appeal, or a request for an oral hearing, will not entitle a party to a refund of such fee."

However, the Office may find a mistake pursuant to 37 CFR 1.26, waive the presumption in 37 CFR 1.26 that applications are not entitled to filing fee refunds, and refund the filing fees associated with unintended duplicate application filings via EFS-Web when the following conditions have been met:

(1) Applicant must certify that they had filed the duplicate application(s) prior to receiving appropriate confirmation from the Office that the initial application filing via EFS-Web was received by the Office;

(2) the request for a refund must be filed within three months from the filing date of the first application receiving an appropriate acknowledgement;

(3) the request must include a statement which attests on a personal knowledge basis or to the satisfaction of the Director that the duplicate application was intended to be the original application;

(4) the duplicate application must have been filed via EFS-Web on or after March 16, 2006;

(5) the request must list the other application(s) of which the instant application is deemed to be a "duplicate"; and

(6) the request should include a statement of express abandonment of the instant application as it was filed in error.

When the above conditions have been met, the Office will generally accept the statement as an assertion that the duplicate application was filed by mistake without requiring further information.

If the request for refund is not filed within three months from the filing date of the first application receiving an appropriate acknowledgement, as an alternative, petitioner may wish to file a declaration of express abandonment of the application pursuant to 37 CFR 1.138(d) to obtain a refund of the search and excess claims fees. Applicant is advised to file the declaration without delay as the express abandonment can only be processed before an examination has been made of the application. Thereafter, applicant cannot obtain a refund of such fees except as provided in 37 CFR 1.26.

Further correspondence with respect to this matter should be delivered through one of the following mediums:

By mail: Mail Stop PETITIONS
Commissioner for Patents
Post Office Box 1450
Alexandria, VA 22313-1450

By hand: Customer Service Window
Mail Stop Petitions
Randolph Building
401 Dulany Street
Alexandria, VA 22314

By fax: (571) 273-8300
ATTN: Office of Petitions

By internet: EFS-Web
www.uspto.gov/ebc/efs_help.html
(for help using EFS-Web call the
Patent Electronic Business Center
at (866) 217-9197)

Any questions concerning this matter may be directed to the undersigned at (571) 272-3208.

/KOC/
Karen Creasy
Petitions Examiner
Office of Petitions

UNITED STATES PATENT AND TRADEMARK OFFICE

UNITED STATES DEPARTMENT OF COMMERCE
United States Patent and Trademark Office
Address: COMMISSIONER FOR PATENTS
P.O. Box 1450
Alexandria, Virginia 22313-1450
www.uspto.gov

APPLICATION NO.	FILING DATE	FIRST NAMED INVENTOR	ATTORNEY DOCKET NO.	CONFIRMATION NO.
12/404,731	03/16/2009	Masashi ENDO	0221.1297	2291

7590 04/13/2011

STAAS & HALSEY LLP
SUITE 700
1201 NEW YORK AVENUE, N.W.
WASHINGTON, DC 20005

EXAMINER	
BERNARD, DANIEL J	
ART UNIT	PAPER NUMBER
2189	
MAIL DATE	DELIVERY MODE
04/13/2011	PAPER

DECISION GRANTING PETITION UNDER 37 CFR 1.138(d)

The declaration of express abandonment is recognized

This is in response to the petition under 37 CFR 1.138(d), requesting for a refund of any previously paid search fee and excess claims fee in the above-identified application.

The petition is granted.

The express abandonment is recognized. Any previously paid search fee and excess claims fee are hereby refunded.

Telephone inquiries should be directed to the Office of Data Management at (571) 272-4200.

Patent Publication Branch
Office of Data Management

SPE RESPONSE FOR CERTIFICATE OF CORRECTION

DATE : 11/07/11

TO SPE OF : ART UNIT: 1776 Attn: SMITH DUANE (SPE)

SUBJECT : Request for Certificate of Correction for Appl. No.: 12/404739 Patent No.: 8021452

CofC mailroom date: 10/28/2011

Please respond to this request for a certificate of correction within 7 days.

FOR IFW FILES:

Please review the requested changes/corrections as shown in the **COCIN** document(s) in the IFW application image. No new matter should be introduced, nor should the scope or meaning of the claims be changed.

Please complete the response (see below) and forward the completed response to scanning using document code **COCX**.

FOR PAPER FILES:

Please review the requested changes/corrections as shown in the attached certificate of correction. Please complete this form (see below) and forward it with the file to:

Certificates of Correction Branch (CofC)
Randolph Square – 9D10-A
Palm Location 7580

Note: Please check Foreign Application Priority Data Should this data be corrected as requested or not

Tasneem Siddiqui
Certificates of Correction Branch
703-756-1814 & 703-756-1593

Thank You For Your Assistance

The request for issuing the above-identified correction(s) is hereby:
Note your decision on the appropriate box.

- X **Approved** — **All** changes apply.
- ☐ **Approved in Part** — Specify below which changes **do not** apply.
- ☐ **Denied** — State the reasons for denial below.

Comments: ok to enter

/Duane Smith/ 1776
SPE **Art Unit**

SPE RESPONSE FOR CERTIFICATE OF CORRECTION

DATE : 11/07/11

TO SPE OF : ART UNIT: 1776 Attn: SMITH DUANE (SPE)

SUBJECT : Request for Certificate of Correction for Appl. No.: 12/404739 Patent No.: 8021452

CofC mailroom date: 10/28/2011

Please respond to this request for a certificate of correction within 7 days.

FOR IFW FILES:

Please review the requested changes/corrections as shown in the **COCIN** document(s) in the IFW application image. No new matter should be introduced, nor should the scope or meaning of the claims be changed.

Please complete the response (see below) and forward the completed response to scanning using document code **COCX**.

FOR PAPER FILES:

Please review the requested changes/corrections as shown in the attached certificate of correction. Please complete this form (see below) and forward it with the file to:

Certificates of Correction Branch (CofC)
Randolph Square – 9D10-A
Palm Location 7580

Note: Please check Foreign Application Priority Data Should this data be corrected as requested or not

Tasneem Siddiqui
Certificates of Correction Branch
703-756-1814 & 703-756-1593

Thank You For Your Assistance

The request for issuing the above-identified correction(s) is hereby:
Note your decision on the appropriate box.

X Approved — **All** changes apply.

☐ **Approved in Part** — Specify below which changes **do not** apply.

☐ Denied — State the reasons for denial below.

Comments: ok to enter

/Duane Smith/
SPE

1776
Art Unit

UNITED STATES PATENT AND TRADEMARK OFFICE

UNITED STATES DEPARTMENT OF COMMERCE
United States Patent and Trademark Office
Address: COMMISSIONER FOR PATENTS
P.O. Box 1450
Alexandria, Virginia 22313-1450
www.uspto.gov

APPLICATION NO.	FILING DATE	FIRST NAMED INVENTOR	ATTORNEY DOCKET NO.	CONFIRMATION NO.
12/404,748	03/16/2009	Thomas B. Harmon	069245.011000/US/2	2326

7590 09/08/2010

GREENBERG TRAURIG (HOU)
INTELLECTUAL PROPERTY DEPARTMENT
1000 Louisiana Street
Suite 1700
Houston, TX 77002

EXAMINER	
MILLER, BENA B	
ART UNIT	**PAPER NUMBER**
3725	
NOTIFICATION DATE	**DELIVERY MODE**
09/08/2010	ELECTRONIC

DECISION GRANTING PETITION UNDER 37 CFR 1.138(d)

The declaration of express abandonment is recognized

This is in response to the petition under 37 CFR 1.138(d), requesting for a refund of any previously paid search fee and excess claims fee in the above-identified application.

The petition is granted.

The express abandonment is recognized. Any previously paid search fee and excess claims fee are hereby refunded.

Telephone inquiries should be directed to the Office of Data Management at (571) 272-4200.

Patent Publication Branch
Office of Data Management

UNITED STATES PATENT AND TRADEMARK OFFICE

Commissioner for Patents
United States Patent and Trademark Office
P.O. Box 1450
Alexandria, VA 22313-1450
www.uspto.gov

BROWN RUDNICK LLP
ONE FINANCIAL CENTER
BOSTON MA 02111

MAILED
FEB 02 2012
OFFICE OF PETITIONS

In re Application of :
Dale Newton :
Application No. 12/404,756 :
Deposited: March 16, 2009 : ON PETITION
Attorney Docket No. 27406/1 :

This is in response to the communication styled "Re: Alleged Notice of Abandonment Regarding Patent Application No. 12/404,756" filed December 27, 2011, which is properly treated as a request to withdraw the holding of abandonment. It appears that the petition was filed by applicant in a *pro se* capacity.

For the reasons stated herein, the petition is **DISMISSED**.

Any request for reconsideration pursuant to § 1.181 must be filed within **TWO (2) MONTHS** of the date of this decision in order to be considered timely. See 37 CFR §1.181(f). Extensions of time under §1.136(a) are not permitted.

The above-identified application became abandoned for failure to file a response to the final Office action mailed April 26, 2011. This Office action set a three (3) month statutory period for reply, with extensions of time obtainable under § 1.136(a). No response considered received and no extension of time obtained, the application became abandoned effective July 27, 2011. A courtesy Notice of Abandonment was mailed on November 14, 2011.

Applicant requests to withdraw the holding of abandonment on the basis that on October 26, 2011 he personally submitted via the USPTO website, a Petition for Extension of Time and a Notice of Appeal, along with the payment of a $1,015 extension fee. Applicant further notes that with the submission, applicant received an emailed response and written reply back from the USPTO, evidenced by "EFS-Web Receipt for 13282435."

A review of the Office records, including the image file wrapper of this application, confirms that no response to the final Office action was filed in this application on October 26, 2011. Rather, the reply, a Notice of Appeal and extension of time directed to application No. 12/404,756, was filed as a new application, and assigned application No. 13/282,435.

In order for the holding of abandonment to be withdrawn and the paper considered timely filed in this application, applicant's filing error must be corrected. Correction of such a filing error requires the filing of a petition under 37 CFR 1.182 (and $400 petition fee) to move the papers from application No. 13/282,435 to application No. 12/404,756. Any such petition should be directed to and filed in application No. 12/404,756.

The address on the petition is that of sole inventor Dale Newton. The address of record is that of the law firm of Brown Rudnick LLP. No revocation of power of attorney or change of correspondence address is of record in this application. A courtesy copy of this decision is being sent to the address on the petition. All future correspondence will continue to be directed to Brown Rudnick LLP until such time as either a proper revocation of attorney, withdrawal of attorney or change of correspondence address is filed.

Further correspondence with respect to this decision should be addressed as follows:

By mail: Mail Stop Petition
Commissioner for Patents
P.O. Box 1450
Alexandria, VA 22313-1450

By fax: (571) 273-8300
ATTN: Office of Petitions

By hand: Customer Service Window
Randolph Building
401 Dulany Street
Alexandria, VA 22314

Telephone inquiries concerning this decision should be directed to the undersigned at (571) 272-3219.

Nancy Johnson
Senior Petitions Attorney
Office of Petitions

Dale C. Newton
3011 Marta Circle
Apt #203
Kissimmee FL 34741

UNITED STATES PATENT AND TRADEMARK OFFICE

Commissioner for Patents
United States Patent and Trademark Office
P.O. Box 1450
Alexandria, VA 22313-1450
www.uspto.gov

PFIZER INC.
PATENT DEPARTMENT
Bld 114 M/S 9114
EASTERN POINT ROAD
GROTON, CT 06340

MAILED

FEB 24 2011

OFFICE OF PETITIONS

In re Application of :
David L. SHELTON, et *al.* :
Application No. 12/404,759 : DECISION GRANTING PETITION
Filed: March 16, 2009 : UNDER 37 CFR 1.313(c)(2)
Attorney Docket No. **PC19494C** :

This is a decision on the petition under 37 CFR 1.313(c)(2), filed February 24, 2011, to withdraw the above-identified application from issue after payment of the issue fee.

The petition is **GRANTED**.

The above-identified application is withdrawn from issue for consideration of a submission under 37 CFR 1.114 (request for continued examination). *See* 37 CFR 1.313(c)(2).

Petitioner is advised that the issue fee paid on January 11, 2011 cannot be refunded. If, however, this application is again allowed, petitioner may request that it be applied towards the issue fee required by the new Notice of Allowance.[1]

Telephone inquiries should be directed to the undersigned at (571) 272-7253.

This application is being referred to Technology Center AU 1647 for processing of the request for continued examination under 37 CFR 1.114 and for consideration of the concurrently filed information disclosure statement.

/Monica A. Graves/
Petitions Examiner, Office of Petitions

---

[1] *The request to apply the issue fee to the new Notice may be satisfied by completing and returning the new Part B – Fee(s) Transmittal Form (along with any balance due at the time of submission). Petitioner is advised that the Issue Fee Transmittal Form* ***must*** *be completed and timely submitted to avoid abandonment of the application.*

UNITED STATES PATENT AND TRADEMARK OFFICE

Commissioner for Patents
United States Patent and Trademark Office
P.O. Box 1450
Alexandria, VA 22313-1450
www.uspto.gov

PFIZER INC.
PATENT DEPARTMENT
Bld 114 M/S 9114
EASTERN POINT ROAD
GROTON CT 06340

MAILED
OCT 20 2011
OFFICE OF PETITIONS

In re Patent No. 8,007,800	: DECISION ON REQUEST
Shelton, et al.	: FOR
Issue Date: August 30, 2011	: RECONSIDERATION OF
Application No. 12/404,759	: PATENT TERM ADJUSTMENT
Filed: March 16, 2009	: and
Atty Docket No. PC19494C	: NOTICE OF INTENT TO ISSUE
	: CERTIFICATE OF CORRECTION

This is a decision on the petition filed on October 10, 2011, which is being treated as a petition under 37 CFR 1.705(d) requesting that the patent term adjustment indicated on the above-identified patent be corrected to indicate that the term of the above-identified patent is extended or adjusted by thirty-six (36) days.

The petition to correct the patent term adjustment indicated on the above-identified patent to indicate that the term of the above-identified patent is extended or adjusted by thirty-six (36) days is **GRANTED**.

The Office acknowledges receipt of $200.00 for the fee set forth in 37 CFR 1.18(e). No additional fees are required.

The application is being forwarded to the Certificates of Branch for issuance of a certificate of correction. The Office will issue a certificate of correction indicating that the term of the above-identified patent is extended or adjusted by thirty-six (36) days.

Telephone inquiries specific to this matter should be directed to the undersigned at (571) 272-3222.

/Kenya A. McLaughlin/

Kenya A. McLaughlin
Attorney-Advisor
Office of Petitions

Enclosure: Copy of DRAFT Certificate of Correction

DRAFT COPY

UNITED STATES PATENT AND TRADEMARK OFFICE

CERTIFICATE OF CORRECTION

PATENT : 8,007,800 B2

DATED : Aug. 30. 2011

INVENTOR(S) : Shelton, et al.

It is certified that error appears in the above-identified patent and that said Letters Patent is hereby corrected as shown below:

On the cover page,

[*] Notice: Subject to any disclaimer, the term of this patent is extended or adjusted under 35 USC 154(b) by (34) days

Delete the phrase "by 34 days" and insert – by 36 days--

UNITED STATES PATENT AND TRADEMARK OFFICE

UNITED STATES DEPARTMENT OF COMMERCE
United States Patent and Trademark Office
Address: COMMISSIONER FOR PATENTS
P.O. Box 1450
Alexandria, Virginia 22313-1450
www.uspto.gov

APPLICATION NO.	FILING DATE	FIRST NAMED INVENTOR	ATTORNEY DOCKET NO.	CONFIRMATION NO.
12/404,771	03/16/2009	Koju ITO	Q112616	2367

7590 03/01/2011

SUGHRUE MION, PLLC
2100 PENNSYLVANIA AVENUE, N.W.
SUITE 800
WASHINGTON, DC 20037

EXAMINER	
TUNG, KEE M	
ART UNIT	**PAPER NUMBER**
2628	
NOTIFICATION DATE	**DELIVERY MODE**
03/01/2011	ELECTRONIC

DECISION GRANTING PETITION UNDER 37 CFR 1.138(d)

The declaration of express abandonment is recognized

This is in response to the petition under 37 CFR 1.138(d), requesting for a refund of any previously paid search fee and excess claims fee in the above-identified application.

The petition is granted.

The express abandonment is recognized. Any previously paid search fee and excess claims fee are hereby refunded.

Telephone inquiries should be directed to the Office of Data Management at (571) 272-4200.

Betty Powell

Patent Publication Branch
Office of Data Management

UNITED STATES PATENT AND TRADEMARK OFFICE

Commissioner for Patents
United States Patent and Trademark Office
P.O. Box 1450
Alexandria, VA 22313-1450
www.uspto.gov

MAILED

AUG 08 2011

OFFICE OF PETITIONS

KILPATRICK TOWNSEND & STOCKTON LLP
TWO EMBARCADERO CENTER
EIGHTH FLOOR
SAN FRANCISCO CA 94111-3834

In re Application of	:	
SEESINK, et al	:	
Application No. 12/404,792	:	DECISION ON PETITION
Filed: March 16, 2009	:	TO WITHDRAW
Attorney Docket No. 92685-782595	:	FROM RECORD
	:	

This is a decision on the Request to Withdraw as attorney or agent of record under 37 C.F.R. 1.36(b), filed July 12, 2011.

The request is **APPROVED**.

A grantable request to withdraw as attorney/agent of record must be signed by every attorney/agent seeking to withdraw or contain a clear indication that one attorney is signing on behalf of another/others. The Office requires the practitioner(s) requesting withdrawal to certify that he, she, or they have: (1) given reasonable notice to the client, prior to the expiration of the response period, that the practitioner(s) intends to withdraw from employment; (2) delivered to the client or a duly authorized representative of the client all papers and property (including funds) to which the client is entitled; and (3) notified the client of any responses that may be due and the time frame within which the client must respond, pursuant 37 CFR 10.40(c).

The request was signed by David A. Hall on behalf of the attorneys of record associated with Customer No. 20350.

The attorneys of record associated with Customer No. 20350 have been withdrawn. Applicant is reminded that there is no attorney of record at this time.

The correspondence address of record has been changed and the new correspondence address is the address indicated below until otherwise properly notified.

Telephone inquiries concerning this decision should be directed to the undersigned at (571) 272-6735.

/Diane C. Goodwyn/
Diane C. Goodwyn
Petitions Examiner
Office of Petitions

cc: KAVLICO CORPORATION
14401 PRINCETON AVENUE
MOORPARK CA 93021

UNITED STATES PATENT AND TRADEMARK OFFICE

UNITED STATES DEPARTMENT OF COMMERCE
United States Patent and Trademark Office
Address: COMMISSIONER FOR PATENTS
P.O. Box 1450
Alexandria, Virginia 22313-1450
www.uspto.gov

APPLICATION NUMBER	FILING OR 371(C) DATE	FIRST NAMED APPLICANT	ATTY. DOCKET NO./TITLE
12/404,792	03/16/2009	Peter Seesink	92685-782595

CONFIRMATION NO. 2400

20350
KILPATRICK TOWNSEND & STOCKTON LLP
TWO EMBARCADERO CENTER
EIGHTH FLOOR
SAN FRANCISCO, CA 94111-3834

POWER OF ATTORNEY NOTICE

OC000000049085197

Date Mailed: 08/02/2011

NOTICE REGARDING CHANGE OF POWER OF ATTORNEY

This is in response to the Power of Attorney filed 07/12/2011.

- The withdrawal as attorney in this application has been accepted. Future correspondence will be mailed to the new address of record. 37 CFR 1.33.

/dcgoodwyn/

Office of Data Management, Application Assistance Unit (571) 272-4000, or (571) 272-4200, or 1-888-786-0101

UNITED STATES PATENT AND TRADEMARK OFFICE

Commissioner for Patents
United States Patent and Trademark Office
P.O. Box 1450
Alexandria, VA 22313-1450
www.uspto.gov

K&L Gates LLP
P.O. Box 1135
CHICAGO IL 60690

MAILED

JAN 25 2011

OFFICE OF PETITIONS

In re Application of :
SAFFARI, et al. :
Application No. 12/404,810 :
Filed: March 16, 2009 :
Attorney Docket No. **3718611-05518** :

DECISION ON PETITION
TO MAKE SPECIAL
37 CFR 1.102

This is a decision on the petition under 37 CFR 1.102, filed January 13, 2011, to make the above-identified application special under the Patent Application Backlog Reduction Stimulus Plan which is a pilot program set forth at 74 Federal Register Notice 62285 (November 27, 2009) and 75 Federal register Notice 36063 (June 24, 2010).

The petition is **GRANTED**.

A grantable petition to make an application special under 37 CFR 1.102 and the pilot program as set forth in 74 FR 62285 and 75 FR 36063 must be directed to a nonprovisional application filed prior to October 1, 2009.

The USPTO will accord special status for examination under Patent Application Backlog Reduction Stimulus Plan under the following conditions:

(1) The application for which special status is sought is a nonprovisional application that has an actual filing date earlier than October 1, 2009;

(2) The applicant has another copending nonprovisional application that has an actual filing date earlier than October 1, 2009, and is complete under 37 CFR 1.53;

(3) The application for which special status is sought and the other copending nonprovisional application either are owned by the same party as of October 1, 2009, or name at least one inventor in common;

(4) The applicant files a letter of express abandonment under 37 CFR 1.138(a) in the copending nonprovisional application before it has been taken up for examination and

a) includes a statement that the applicant has not and will not file a new application that claims the same invention claimed in the expressly abandoned application;

b) includes a statement that the applicant has not and will not file an application that claims the benefit of the expressly abandoned application under any provision of title 35, United States Code, and

c) includes a statement that the applicant agrees not to request a refund of any fees paid in the expressly abandoned application; and

(5) The applicant files a petition under 37 CFR 1.102 in the application for which special status is sought that

a) includes a specific identification of the relationship between the applications that qualifies the application for special status;

b) identifies, by application number if available, the application that is being expressly abandoned;

c) provides a statement certifying that applicant has not filed petitions in more than fourteen (14) other applications requesting special status under this program; and

d) provides a statement that applicant agrees to make an election without traverse in a telephonic interview if the Office determines that the claims of the application to be made special are directed to two or more independent and distinct inventions.

The requirement for a fee for consideration of the petition to make special for applications pertaining to Patent Application Backlog Reduction Stimulus Plan has been waived.

The instant petition complies with the conditions required under Patent Application Backlog Reduction Stimulus Plan. Accordingly, the above-identified application has been accorded "special" status.

Telephone inquires concerning this decision should be directed to Brian W. Brown at 571-272-5338.

All other inquires concerning either the examination or status of the application should be directed to the Technology Center.

The application is being forwarded to the Office of Patent Application Processing for further processing commensurate with this decision.

Brian W. Brown
Petitions Examiner
Office of Petitions

UNITED STATES PATENT AND TRADEMARK OFFICE

COMMISSIONER FOR PATENTS
UNITED STATES PATENT AND TRADEMARK OFFICE
P.O. BOX 1450
ALEXANDRIA, VA 22313-1450
WWW.USPTO.GOV

Paper No.

TOWNSEND AND TOWNSEND AND CREW, LLP
TWO EMBARCADERO CENTER
EIGHTH FLOOR
SAN FRANCISCO CA 94111-3834

MAILED

DEC 06 2010

OFFICE OF PETITIONS

In re Application of :
Mascal :
Application No. 12/404,828 :
Patent No.: 7,829,732 : DECISION ON PETITION
Filed: March 16, 2009 : PURSUANT TO
Issued: November 9, 2010 : 37 C.F.R. § 1.28(c)
Attorney Docket No.: 023070-188920US :
Title: HIGH-YIELD CONVERSION OF CELLULOSIC BIOMASS INTO FURANIC BIOFUELS AND VALUE-ADDED PRODUCTS :

This is a notice regarding your request for acceptance of a fee deficiency submission pursuant to 37 C.F.R. § 1.28, received on October 28, 2010. On September 1, 1998, the Court of Appeals for the Federal Circuit held that 37 C.F.R. § 1.28(c) is the sole provision governing the time for correction of the erroneous payment of the issue fee as a small entity. See DH Technology v. Synergystex International, Inc. 154 F.3d 1333, 47 USPQ2d 1865 (Fed. Cir. Sept. 1, 1998).

The Office no longer investigates or rejects original or reissue applications under 37 C.F.R. § 1.56. 1098 Off. Gaz. Pat. Office 502 (January 3, 1989). Therefore, nothing in this notice is intended to imply that an investigation was done.

Petitioner has identified the particular type of fee that was erroneously paid as a small entity, when the small entity fee was actually paid, the small entity fee that was actually paid, the deficiency owed amount, and the total deficiency payment owed.

The deficiency payment in the amount of $820 has been received.

Your fee deficiency submission pursuant to 37 C.F.R. § 1.28(c) is hereby accepted. The petition is **GRANTED** accordingly.

This patent is no longer entitled to small entity status. Accordingly, all future fees paid in this patent must be paid at the large entity rate.

Telephone inquiries regarding *this decision* should be directed to the undersigned at (571) 272-3225.[1]

/Paul Shanoski/
Paul Shanoski
Senior Attorney
Office of Petitions

1 Petitioner will note that all practice before the Office should be in writing, and the action of the Office will be based exclusively on the written record in the Office. See 37 C.F.R. § 1.2. As such, Petitioner is reminded that no telephone discussion may be controlling or considered authority for Petitioner's further action(s).

UNITED STATES PATENT AND TRADEMARK OFFICE

UNITED STATES DEPARTMENT OF COMMERCE
United States Patent and Trademark Office
Address: COMMISSIONER FOR PATENTS
P.O. Box 1450
Alexandria, Virginia 22313-1450
www.uspto.gov

APPLICATION NO.	FILING DATE	FIRST NAMED INVENTOR	ATTORNEY DOCKET NO.	CONFIRMATION NO.
12/404,861	03/16/2009	Shinichi KANNO	339718US2SRD CONT	2544

22850 7590 06/13/2011

OBLON, SPIVAK, MCCLELLAND MAIER & NEUSTADT, L.L.P.
1940 DUKE STREET
ALEXANDRIA, VA 22314

EXAMINER	
GAFFIN, JEFFREY A	

ART UNIT	PAPER NUMBER
2117	

NOTIFICATION DATE	DELIVERY MODE
06/13/2011	ELECTRONIC

Please find below and/or attached an Office communication concerning this application or proceeding.

The time period for reply, if any, is set in the attached communication.

Notice of the Office communication was sent electronically on above-indicated "Notification Date" to the following e-mail address(es):

patentdocket@oblon.com
oblonpat@oblon.com
jgardner@oblon.com

UNITED STATES PATENT AND TRADEMARK OFFICE

Commissioner for Patents
United States Patent and Trademark Office
P.O. Box 1450
Alexandria, VA 22313-1450
www.uspto.gov

OBLON, SPIVAK, MCCLELLAND MAIER & NEUSTADT, L.L.P.
1940 DUKE STREET
ALEXANDRIA VA 22314

In re Application of: KANNO et al.
Application No. 12/404,861
Attorney Docket #: 339718US2SRD CONT
Filed: March 16, 2009
For: SEMICONDUCTOR MEMORY DEVICE AND METHOD OF CONTROLLING THE SAME

DECISION ON REQUEST TO PARTICIPATE IN PATENT PROSECUTION HIGHWAY PROGRAM AND PETITION TO MAKE SPECIAL UNDER 37 CFR 1.102(a)

This is a decision on the renewed request to participat ghway (PPH) program and the petition under 37 CFR 1.102(a), filed April 11, 2011, to make the above-identified application special.

The petition is **GRANTED.**

A grantable request to participate in the PPH program and petition to make special require:

(1) The U.S. application is
(a) a Paris Convention application which either
(i) validly claims priority under 35 U.S.C. 119(a) and 37 CFR 1.55 to one or more applications filed in the JPO, or
(ii) validly claims priority to a PCT application that contains no priority claims,

Or

(b) a national stage application under the PCT (an application which entered the national stage in the U.S. from a PCT international application after compliance with 35 U.S.C. 371), which PCT application
(i) validly claims priority to an application filed in the JPO, or
(ii) validly claims priority to a PCT application that contains no priority claims, or
(iii) contains no priority claim,

Or

(c) a so-called bypass application filed under 35 U.S.C. 111 (a) which validly claims benefit under 35 U.S.C. 120 to a PCT application, which PCT application
(i) validly claims priority to an application filed in the JPO, or
(ii) validly claims priority to a PCT application that contains no priority claims, or
(iii) contains no priority claim.

Where the JPO application that contains the allowable/patentable claims is not the same application for which priority is claimed in the U.S. application, applicant must identify the relationship between the

JPO application that contains the allowable/patentable claims and the JPO priority application claimed in the U.S. application.

(2) Applicant must submit a copy of:
a. The allowable/patentable claim(s) from the JPO application(s) or if a copy of the allowable/patentable claims is available via the Dossier Access System (DAS) applicant may request the USPTO obtain a copy from the DAS, however if the USPTO is unable to obtain a copy from the DAS the applicant will be required to submit a copy;
b. An English translation of the allowable/patentable claim(s) and
c. A statement that the English translation is accurate;

Effective January 29, 2010, for a period of two years ending on January 28, 2012, the USPTO will accept claims written in dependent form in the U.S. application which are narrower in scope than the allowable/patentable claims in the Japanese application.

(3) Applicant must:
a. Ensure all the claims in the U.S. application must sufficiently correspond or be amended to sufficiently correspond to the allowable/patentable claim(s) in the JPO application(s) and
b. Submit a claims correspondence table in English;

(4) Examination of the U.S. application has not begun;

(5) Applicant must submit:
a. Documentation of prior office action:
i. a copy of the office action(s)just prior to the "Decision to Grant a Patent" from each of the JPO application(s) containing the allowable/patentable claim(s) or
ii. if the allowable/patentable claims(s) are from a "Notification of Reasons for Refusal" then the Notification of Reasons for Refusal or
iii. if the JPO application is a first action allowance then no office action from the JPO is necessary should be indicated on the request/petition form;

Further, if a copy of the documents from a above is available via the Dossier Access System (DAS) applicant may request the USPTO obtain a copy from the DAS, however if the USPTO is unable to obtain a copy from the DAS the applicant will be required to submit a copy;

b. An English language translation of the JPO Office action from (5)(a)(i)-(ii) above

c. A statement that the English translation is accurate;

Effective January 29, 2010, Applicants may submit a machine translation into the English language of the copy of the latest JPO office action just prior to the "Decision to Grant a Patent" (e.g., the latest "Notification of Reasons for Refusal") from each of the JPO application(s) containing the allowable/patentable claims that

are the basis for the PPH request. The machine translation into the English language must be one that is provided by the JPO. That is, the machine translation into the English language cannot be one that is provided by a commercial service. Where a machine translation into the English language of the copy of the latest JPO office action (obtained from the JPO) is submitted, it will not be necessary to include a statement that the English translation is accurate.

(6) Applicant must submit:
   a. An IDS listing the documents cited by the JPO examiner in the JPO office action (unless already submitted in this application)
   b. Copies of the documents except U.S. patents or U.S. patent application publications (unless already submitted in this application);

The petition is **GRANTED.**

The request to participate in the PPH pilot program and petition are found to comply with the above requirements. Accordingly, the above-identified application has been accorded "special" status.

Telephone inquiries concerning this decision should be directed to Mano Padmanabhan at 571-272-4210.

All other inquiries concerning the examination or status of the application is accessible in the PAIR system at http://www.uspto.gov/ebc/index.html.

The application is being forwarded to the examiner for action on the merits commensurate with this decision.

/Mano Padmanabhan/

Mano Padmanabhan
Quality Assurance Specialist, Technology Center 2100, Workgroup 2180
571-272-4210

UNITED STATES PATENT AND TRADEMARK OFFICE

Commissioner for Patents
United States Patent and Trademark Office
P.O. Box 1450
Alexandria, VA 22313-1450
www.uspto.gov

MAILED

AUG 06 2010

OFFICE OF PETITIONS

INGURAN LLC
22575 STATE HIGHWAY 6 SOUTH
NAVASOTA, TX 77868

In re Application of	:	
Durack et al.	:	
Application No. 12/404,931	:	DECISION ON PETITION
Filed: March 16, 2009	:	
Attorney Docket No. I-2, Pulse (Con)	:	

This is a decision on the petition under 37 CFR 1.137(b), filed July 16, 2010, to revive the above-identified application.

The petition is **GRANTED**.

This application became abandoned for failure to timely pay the issue and publication fees on or before June 9, 2010, as required by the Notice of Allowance and Fee(s) Due mailed March 9, 2010. Accordingly, the application became abandoned on June 10, 2010. A Notice of Abandonment was mailed July 2, 2010.

The petition satisfies the requirements of 37 CFR 1.137(b) in that petitioner has supplied (1) the reply in the form of payment of the issue fee of $1,510 and the publication fee of $300, (2) the petition fee of $1,620, and (3) a proper statement of unintentional delay.

It is not apparent whether the person signing the statement of unintentional delay was in a position to have firsthand or direct knowledge of the facts and circumstances of the delay at issue. Nevertheless, such statement is being treated as having been made as the result of a reasonable inquiry into the facts and circumstances of such delay. See 37 CFR 10.18(b) and Changes to Patent Practice and Procedure; Final Rule Notice, 62 Fed. Reg. 53131, 53178 (October 10, 1997), 1203 Off. Gaz. Pat. Office 63, 103 (October 21, 1997). In the event that such an inquiry has not been made, petitioner must make such an inquiry. If such inquiry results in the discovery that it is not correct that the entire delay in filing the required reply from the due date for the reply until the filing of a grantable petition pursuant to 37 CFR 1.137(b) was unintentional, petitioner must notify the Office.

Telephone inquiries concerning this decision should be directed to the undersigned at (571)272-6059.

This matter is being referred to Technology Center AU 1797 for appropriate action on the Amendment after Notice of Allowance filed July 16, 2010.

A. Kelley

Alicia Kelley
Petitions Examiner
Office of Petitions

UNITED STATES PATENT AND TRADEMARK OFFICE

Commissioner for Patents
United States Patent and Trademark Office
P.O. Box 1450
Alexandria, VA 22313-1450
www.uspto.gov

LEVISOHN BERGER, LLP
11 Broadway, Suite 615
New York NY 10004

MAILED

DEC 16 2011

OFFICE OF PETITIONS

In re Application of	:	
Yaffa Licari	:	
Application No. 12/404936	:	
Filing or 371(c) Date: 03/16/2009	:	ON PETITION
Attorney Docket Number:	:	
1855.010	:	

This is a decision on the Petition under 37 CFR 1.137(b), filed November 30, 2011, to revive the above-identified application.

The petition is granted.

The above-identified application became abandoned for failure to timely and properly reply to the non-final Office action, mailed May 27, 2011. The Office action set a three (3) month period for reply from the mail date of the Office action. Extensions of time were available under 37 CFR 1.136(a). No complete and proper reply having been received, the application became abandoned on August 28, 2011.

The petition satisfies the conditions for revival pursuant to the provisions of 37 CFR 1.137(b) in that (1) the reply in the form of an Amendment is filed with the present petition; (2) the petition fee; and (3) the required statement of unintentional delay. Accordingly, the reply is accepted as having been unintentionally delayed.

This application is being referred to Technology Center Art Unit 3781 for processing of the Amendment filed with the petition in due course.

Telephone inquiries concerning this decision should be directed to the undersigned at (571) 272-3232.

/DLW/

Derek L. Woods
Attorney
Office of Petitions

UNITED STATES PATENT AND TRADEMARK OFFICE

Commissioner for Patents
United States Patent and Trademark Office
P.O. Box 1450
Alexandria, VA 22313-1450
www.uspto.gov

MACMILLAN SOBANSKI & TODD, LLC
ONE MARITIME PLAZA FIFTH FLOOR
720 WATER STREET
TOLEDO OH 43604-1619

MAILED

MAR 21 2012

OFFICE OF PETITIONS

In re Application of :
Willey, et al. : DECISION ON PETITION
Application No. 12/404,992 :
Filed: March 16, 2009 :
Atty. Dkt. No.: 1-52553/D2006-14(5) :

This decision is in response to the petition under 37 CFR 1.137(b), filed February 28, 2012.

The petition is **GRANTED**.

The application became abandoned December 26, 2009 for failure to timely submit a proper reply to the non-final Office action mailed September 25, 2009. The non-final Office action set a three month shortened statutory period of time for reply. Notice of Abandonment was mailed April 14, 2010.

A grantable petition pursuant to 37 C.F.R. § 1.137(b) must be accompanied by: (1) the required reply to the outstanding Office action or notice, unless previously filed; (2) the petition fee as set forth in 37 C.F.R. § 1.17(m); (3) a statement that the entire delay in filing the required reply from the due date for the reply until the filing of a grantable petition pursuant to 37 C.F.R. § 1.137(b) was unintentional; and (4) any terminal disclaimer (and fee set forth in 37 C.F.R. § 1.20(d)) required pursuant to 37 C.F.R. § 1.137(c).

The instant petition has been carefully reviewed and found in compliance with the requirements set forth above.

This application is being forwarded to Group Art Unit 1637 for further processing.

Telephone inquiries concerning this decision should be directed to the undersigned at (571) 272-3205.

/ALESIA M. BROWN/

Alesia M. Brown
Attorney Advisor
Office of Petitions

UNITED STATES PATENT AND TRADEMARK OFFICE

Commissioner for Patents
United States Patent and Trademark Office
P.O. Box 1450
Alexandria, VA 22313-1450
www.uspto.gov

Stoneman Law Patent Group
P.O. Box 40070
PHOENIX AZ 85067-0070

MAILED

JAN 31 2011

OFFICE OF PETITIONS

In re Application of :
Eric K. Buchholz :
Application No. 12/405,071 :
Filed: Maqrch 16, 2009 :
Attorney Docket No. **P08108** :

DECISION ON PETITION
TO WITHDRAW
FROM RECORD

This is a decision on the renewed request to withdraw as attorney of record under 37 CFR § 1.36(b), filed January 3, 2011.

The request is **APPROVED**..

A grantable request to withdraw as attorney/agent of record must be signed by every attorney/agent seeking to withdraw or contain a clear indication that one attorney is signing on behalf of another/others. The Office requires the practitioner(s) requesting withdrawal to certify that he, she, or they have: (1) given reasonable notice to the client, prior to the expiration of the response period, that the practitioner(s) intends to withdraw from employment; (2) delivered to the client or a duly authorized representative of the client all papers and property (including funds) to which the client is entitled; and (3) notified the client of any responses that may be due and the time frame within which the client must respond , pursuant to 37 CFR 10.40.

The request was signed by Lori L. Ivan on behalf of all attorneys of record who are associated with Customer Number 28548.

All attorneys/agents associated with Customer Number 28548 have been withdrawn. Applicant is reminded that there is no attorney of record at this time.

The correspondence address of record has been changed and all future correspondence will be directed to the first named inventor Eric K. Buchholz at the address indicated below.

There is no outstanding Office action mailed that requires a reply from the applicant.

Telephone inquiries concerning this decision should be directed to the undersigned at 571-272-4584.

/JoAnne Burke/
JoAnne Burke
Petitions Examiner
Office of Petitions

cc: Eric K. Buchholz
28196 N. Edwards Road
Queen Creek, AZ 85243

UNITED STATES PATENT AND TRADEMARK OFFICE

Commissioner for Patents
United States Patent and Trademark Office
P.O. Box 1450
Alexandria, VA 22313-1450
www.uspto.gov

MAILED

SEP 20 2011

OFFICE OF PETITIONS

FISH & RICHARDSON P.C.
P.O. Box 1022
MINNEAPOLIS MN 55440-1022

In re Application of
Kawell et al.
Application No. 12/405,092
Filed: March 16, 2009
Dkt. No.: 07844-0682004

: DECISION ON APPLICATION FOR
: PATENT TERM ADJUSTMENT
:
:
:

This is a decision on the petition filed on September 13, 2011 requesting that the patent term adjustment indicated on the above-identified patent be corrected to indicate that the term of the above-identified patent is extended or adjusted by 36 days.

The petition to correct the patent term adjustment indicated on the above-identified patent to indicate that the term of the above-identified patent is extended or adjusted by 36 days is **GRANTED**.

The Office acknowledges receipt of the $200.00 fee set forth in 37 CFR 1.18(e). No additional fees are required.

Any request for reconsideration of the patent term adjustment indicated on the patent must be timely filed within 2 months after issuance pursuant to 37 CFR 1.705(d) and **must** include payment of the required fee under 37 CFR 1.18(e).

The application file is being forwarded to the Office of Data Management for issuance of the patent. The patent term adjustment indicated on the patent (as shown on the Issue Notification mailed about three weeks prior to patent issuance) will include any additional adjustment accrued both for Office delay in issuing the patent more than four months after payment of the issue fee and satisfaction of all outstanding requirements, and for the Office taking in excess of three years to issue the patent (to the extent that the three-year period does not overlap with periods already accorded).

Telephone inquiries specific to this matter should be directed to the undersigned at (571) 272-3215.

Charlema Grant
Attorney Advisor
Office of Petitions

Enclosure: Copy of REVISED PALM Screen

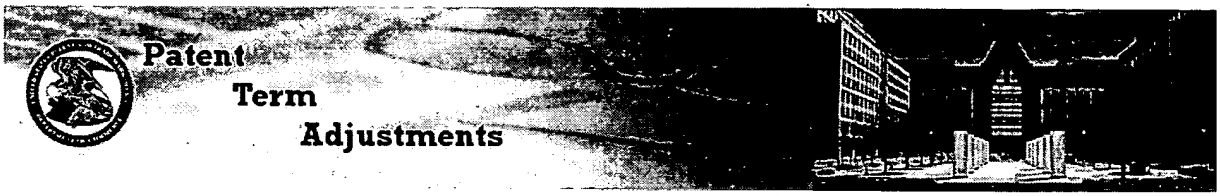

PTA/PTE Information | Patent Term Adjustment | Patent Term Extension

Application Number*: 12405092 Search | Explanation of PTA Calculation | Explanation of PTE Calculation

PTA Calculations for Application: 12405092

Application Filing Date	03/16/2009	OverLapping Days Between (A and B) or (A and C)	0
Issue Date of Patent		Non-Overlapping USPTO Delays:	54
A Delays	54	PTO Manual Adjustment	2
B Delays	0	Applicant Delay (APPL)	20
C Delays	0	Total PTA (days)	36

* - Sorted Column

File Contents History

Action Number	Action Recorded Date	Action Due Date	Action Code	Action Description	Duration PTO	Duration APPL	Parent Action Number
72	09/17/2011		P028	Adjustment of PTA Calculation by PTO		18	0
71	09/17/2011		P028	Adjustment of PTA Calculation by PTO	20		0
64	07/14/2011		MN/=.	Mail Notice of Allowance			0
63	07/11/2011		OAR	Office Action Review			0
62	07/11/2011		OAR	Office Action Review			0
61	07/11/2011		OAR	Office Action Review			0
60	07/11/2011		IREV	Issue Revision Completed			0
59	07/11/2011		N/=.	Notice of Allowance Data Verification Completed			0
58	07/11/2011		DOCK	Case Docketed to Examiner in GAU			0
57	07/08/2011		DVER	Document Verification			0
56	07/07/2011		EX.R	Reasons for Allowance			0
55	07/07/2011		EX.A	Examiner's Amendment Communication			0
54	07/07/2011		CNTA	Allowability Notice			0
53	07/07/2011		P574	Paralegal TD Accepted			0
52	07/07/2011		FWDX	Date Forwarded to Examiner			0
51	04/08/2011		A.NE	Amendment after Final Rejection			0
48	04/05/2011		EML_NTR	Email Notification			0
47	04/05/2011		MCTAV	Mail Advisory Action (PTOL - 303)			0
46	03/28/2011		CTAV	Advisory Action (PTOL-303)			0
45	03/24/2011		EML_NTR	Email Notification			0
44	03/24/2011		MEXIN	Mail Examiner Interview Summary (PTOL - 413)			0
42	03/11/2011		FWDX	Date Forwarded to Examiner			0
41	03/10/2011		A.NE	Amendment after Final Rejection			0
40	03/10/2011		DIST	Terminal Disclaimer Filed			0
43	03/08/2011		EXIN	Examiner Interview Summary Record (PTOL - 413)			0
39	01/10/2011		ELC_RVW	Electronic Review			0
38	01/10/2011		EML_NTF	Email Notification			0
37	01/10/2011		MCTFR	Mail Final Rejection (PTOL - 326)			0
36	01/05/2011		CTFR	Final Rejection			0
35	10/29/2010		FWDX	Date Forwarded to Examiner			0
34	10/29/2010	10/09/2010	A...	Response after Non-Final Action		20	30
33	10/29/2010		XT/G	Request for Extension of Time - Granted			0
32	07/09/2010		ELC_RVW	Electronic Review			0
31	07/09/2010		EML_NTF	Email Notification			0
30	07/09/2010	05/16/2010	MCTNF	Mail Non-Final Rejection	54		0.5
29	07/05/2010		CTNF	Non-Final Rejection			0
21	06/21/2010		DOCK	Case Docketed to Examiner in GAU			0
20	07/30/2009		TSSCOMP	IFW TSS Processing by Tech Center Complete			0
15	07/17/2009		EML_NTR	Email Notification			0
23	07/16/2009		IDSC	Information Disclosure Statement considered			0
19	07/16/2009		EIDS.	Electronic Information Disclosure Statement			0
16	07/16/2009		WIDS	Information Disclosure Statement (IDS) Filed			0
14	07/16/2009		PG-ISSUE	PG-Pub Issue Notification			0
13	06/26/2009		EML_NTR	Email Notification			0
12	06/26/2009		PA..	Change in Power of Attorney (May Include Associate POA)			0
11	04/22/2009		OIPE	Application Dispatched from OIPE			0
10	04/07/2009		EML_NTR	Email Notification			0
9	04/07/2009		EML_NTR	Email Notification			0
8	04/07/2009		PA..	Change in Power of Attorney (May Include Associate POA)			0
6	04/07/2009		FLRCPT.O	Filing Receipt			0
7	04/06/2009		PGPC	Sent to Classification Contractor			0
5	03/21/2009		L194	Cleared by OIPE CSR			0
3	03/19/2009		SCAN	IFW Scan & PACR Auto Security Review			0
22	03/16/2009		IDSC	Information Disclosure Statement considered			0
18	03/16/2009		RCAP	Reference capture on IDS			0
17	03/16/2009		M844	Information Disclosure Statement (IDS) Filed			0

4	03/16/2009	WIDS	Information Disclosure Statement (IDS) Filed	0
1	03/16/2009	IEXX	Initial Exam Team nn	0
0.5	03/16/2009	EFILE	Filing date	0

Export to: Excel

UNITED STATES PATENT AND TRADEMARK OFFICE

UNITED STATES DEPARTMENT OF COMMERCE
United States Patent and Trademark Office
Address: COMMISSIONER FOR PATENTS
P.O. Box 1450
Alexandria, Virginia 22313-1450
www.uspto.gov

BIB DATA SHEET

CONFIRMATION NO. 2949

SERIAL NUMBER	FILING or 371(c) DATE RULE	CLASS	GROUP ART UNIT	ATTORNEY DOCKET NO.
12/405,097	03/16/2009	370	2464	090046

APPLICANTS

Qingjiang Tian, San Diego, CA;
Zhanfeng Jia, Belmont, CA;
Lu Xiao, San Diego, CA;
David Jonathan Julian, San Diego, CA;

**** CONTINUING DATA ***************************

**** FOREIGN APPLICATIONS ***************************

**** IF REQUIRED, FOREIGN FILING LICENSE GRANTED ****
03/27/2009

Foreign Priority claimed ☐ Yes ☑ No 35 USC 119(a-d) conditions met ☐ Yes ☑ No Verified and Acknowledged /DEWANDA A SAMUEL/ Examiner's Signature	☐ Met after Allowance Initials	STATE OR COUNTRY	SHEETS DRAWINGS	TOTAL CLAIMS	INDEPENDENT CLAIMS
		CA	4	74	14

ADDRESS

QUALCOMM INCORPORATED
5775 MOREHOUSE DR.
SAN DIEGO, CA 92121
UNITED STATES

TITLE

APPARATUS AND METHOD FOR EMPLOYING CODES FOR TELECOMMUNICATIONS

FILING FEE RECEIVED		
6448	FEES: Authority has been given in Paper No._____ to charge/credit DEPOSIT ACCOUNT No._____ for following:	☐ All Fees ☐ 1.16 Fees (Filing) ☐ 1.17 Fees (Processing Ext. of time) ☐ 1.18 Fees (Issue) ☐ Other _____ ☐ Credit

UNITED STATES DEPARTMENT OF COMMERCE
U.S. Patent and Trademark Office
Address: COMMISSIONER FOR PATENTS
P.O. Box 1450
Alexandria, Virginia 22313-1450

APPLICATION NO./ CONTROL NO.	FILING DATE	FIRST NAMED INVENTOR / PATENT IN REEXAMINATION	ATTORNEY DOCKET NO.
12/405,117	16 March 2009	DEAN ET AL.	200405284-2

HEWLETT-PACKARD COMPANY
Intellectual Property Administration
3404 E. Harmony Road
Mail Stop 35
FORT COLLINS, CO 80528

EXAMINER
ABIY GETACHEW

ART UNIT	PAPER
2434	20110525

DATE MAILED:

Please find below and/or attached an Office communication concerning this application or proceeding.

Commissioner for Patents

The applicant is requesting the deletion of the word "low-profile" in Claim 14, Column 6, line 35 is approved.

/Kambiz Zand/
Acting SPE of Art Unit 2434/2400

/Abiy Getachew/
Examiner, Art Unit 2434

SPE RESPONSE FOR CERTIFICATE OF CORRECTION

Paper No.: _____

DATE : May 24, 2011

TO SPE OF : ART UNIT 2835 SPE

SUBJECT : Request for Certificate of Correction for Appl. No.: 12/405,117 Patent No.: 7,852,637 B2

Please respond to this request for a certificate of correction within 7 days.

FOR IFW FILES:

Please review the requested changes/corrections as shown in the **COCIN** document(s) in the IFW application image. No new matter should be introduced, nor should the scope or meaning of the claims be changed.

Please complete the response (see below) and forward the completed response to scanning using document code **COCX**.

FOR PAPER FILES:

Please review the requested changes/corrections as shown in the attached certificate of correction. Please complete this form (see below) and forward it with the file to:

Certificates of Correction Branch (CofC)
Randolph Square Building
2800 South Randolph Street
Arlington, VA 22206

Should the word "low profile" be deleted from Claim 17, Column 6, line 35 as requested by applicant?
See COCIN dated 5-9-2011

Antonio Johnson

_____
Certificates of Correction Branch
(571)272-0483 Fax – (571)270-9846

Thank You For Your Assistance

The request for issuing the above-identified correction(s) is hereby:
Note your decision on the appropriate box.

- [X] **Approved** — **All** changes apply.
- ☐ **Approved in Part** — Specify below which changes **do not** apply.
- ☐ **Denied** — State the reasons for denial below.

Comments: approved

/kambiz zand/ _____ **SPE** kambiz zand **Art Unit** 2434

UNITED STATES PATENT AND TRADEMARK OFFICE

Commissioner for Patents
United States Patent and Trademark Office
P.O. Box 1450
Alexandria, VA 22313-1450
www.uspto.gov

MAILED

JUN 09 2011

OFFICE OF PETITIONS

Poet, LLC
c/o Foley & Lardner LLP
975 Page Mill Road
Palo Alto, CA 94304-1013

In re Patent of Lewis et al.	:	DECISION ON REQUEST
Patent No. 7,919,291	:	FOR RECONSIDERATION OF
Issue Date: April 5, 2011	:	PATENT TERM ADJUSTMENT
Application No. 12/405,125	:	AND NOTICE OF INTENT TO
Filing Date: March 16, 2009	:	ISSUE CERTIFICATE OF
Attorney Docket No. 098797-1003	:	CORRECTION

This is a decision on the "Request for Reconsideration of Patent Term Adjustment for Patent Under 37 C.F.R. §1.705(d)" filed April 26, 2011, which requests the patent term adjustment indicated on the patent be corrected to indicate the term of the patent is extended or adjusted by thirty (30) days.

The petition to correct the patent term adjustment indicated on the patent to indicate the term of the patent is extended or adjusted by 30 days is **GRANTED**.

The Office will *sua sponte* issue a certificate of correction. Pursuant to 37 C.F.R. § 1.322, the Office will not issue a certificate of correction without first providing assignee or patentee an opportunity to be heard. Accordingly, Patentees are given **one (1) month or thirty (30) days**, whichever is longer, from the mail date of this decision to respond. No extensions of time will be granted under 37 C.F.R. § 1.136.

No portion of this decision should be construed as a waiver of the requirement, set forth in 35 U.S.C. § 154(b)(4), that any civil action by an applicant dissatisfied with a determination made by the Director under 35 U.S.C. § 154(b)(3) be filed in the United States District Court for the District of Columbia within 180 days after the grant of the patent.

Relevant Facts

The Office mailed a Notice to File Corrected Application Papers on March 30, 2009.

Patentees filed a reply to the March 30, 2009 notice on July 24, 2009.

The Office did not enter a reduction in patent term adjustment for any delay in the submission of the July 24, 2009 reply.

The application issued as Patent No. 7,919,291 on April 5, 2011.

The patent sets forth a patent term adjustment of 54 days, which is 95 days of delay under 37 C.F.R. § 1.703 ("Office Delay") reduced by 41 days of delay under 37 C.F.R. § 1.704 (Applicant Delay).

The petition asserts:

1. The Office should have entered a 24-day reduction as a result of delay in the submission of a reply to the March 30, 2009 notice;
2. The correct total period of Applicant Delay is 65 days, not 41 days; and
3. The correct patent term adjustment is 30 days, which is 95 days of Office Delay reduced by 65 days of Applicant Delay.

Discussion

37 C.F.R. § 1.704(b) provides for a reduction when a party takes more than 3 months to respond to any notice or action by the Office making any rejection, objection, argument or other request. Specifically, 37 C.F.R. § 1.704(b) states,

> [A]n applicant shall be deemed to have failed to engage in reasonable efforts to conclude processing or examination of an application for the cumulative total of any periods of time in excess of three months that are taken to reply to any notice or action by the Office making any rejection, objection, argument, or other request, measuring such three-month period from the date the notice or action was mailed or given to the applicant, in which case the period of adjustment set forth in § 1.703 shall be reduced by the number of days, if any, beginning on the day after the date that is three months after the date of mailing or transmission of the Office communication notifying the applicant of the rejection, objection, argument, or other request and ending on the date the reply was filed. The period, or shortened statutory period, for reply that is set in the Office action or notice has no effect on the three-month period set forth in this paragraph.

A reply to the March 30, 2009 notice was not filed until July 24, 2009, which was more than three months after the mailing date of the notice.

The number of days beginning on July 1, 2009, the day after the date three months after the notice was mailed, and ending July 24, 2009, the date the reply was filed, is 24 days. Therefore, the Office agrees entry of a 24-day reduction in patent term adjustment is warranted under 37 C.F.R. § 1.704(b).

In view of the prior discussion, the Office agrees the total period of Applicant Delay is 65 days and agrees the correct patent term adjustment is 30 days, which is 95 days of Office Delay reduced by 65 days of Applicant Delay. Therefore, a Certificate of Correction setting forth a corrected patent term adjustment determination will be issued in due course.

The petition includes authorization to charge the required $200 fee to a deposit account and the fee has been charged to the deposit account. The petition also requires a refund of the fee "because this error is due to a Patent Office error in interpreting and applying the statute." The Office will not refund the required $200 fee even if a petition under 37 C.F.R. § 1.705 demonstrates the Office improperly calculated the patent term adjustment.[1] Therefore, the fee will not be refunded.

The Certificates of Correction Branch will be informed of the instant decision and a certificate of correction indicating the term of the patent is extended or adjusted by **thirty (30)** days will be issued.

Telephone inquiries specific to this decision should be directed to Senior Petitions Attorney Steven Brantley at (571) 272-3203.

Charles Steven Brantley
Senior Petitions Attorney
Office of Petitions

Enclosure: Copy of DRAFT Certificate of Correction

[1] *See* Response to Comment 1, Changes to Implement Patent Term Adjustment Under Twenty-Year Patent Term; Final Rule, 65 Fed. Reg. 56,366, 53,374 (September 18, 2000), 1239 Off. Gaz. Pat. Office 14 (October 3, 2000) ("refunding the fee under § 1.18(e) when the application for patent term adjustment is correct would: (1) require the Office to raise the fee set forth in § 1.18(e) (to enable the Office to recover the same aggregate amount); and (2) add further complication to a review process that must take place in a limited period of time.")

UNITED STATES PATENT AND TRADEMARK OFFICE
CERTIFICATE OF CORRECTION

PATENT NO.	:	7,919,291 B2
APPLICATION NO.	:	12/405,125
DATED	:	April 5, 2011
INVENTOR(S)	:	Stephen M. Lewis et al.

DRAFT

It is certified that error appears in the above-identified patent and that said Letters Patent is hereby corrected as shown below:

On the Title page,

[*] Notice: Subject to any disclaimer, the term of this patent is extended or adjusted under 35 U.S.C. 154(b) by 54 days.

Delete the phrase "by 54 days" and insert --by 30 days--

UNITED STATES PATENT AND TRADEMARK OFFICE

Commissioner for Patents
United States Patent and Trademark Office
P.O. Box 1450
Alexandria, VA 22313-1450
www.uspto.gov

KILPATRICK TOWNSEND & STOCKTON LLP
TWO EMBARCADERO CENTER
EIGHTH FLOOR
SAN FRANCISCO, CA 94111-3834

MAILED

JUN 30 2011

OFFICE OF PETITIONS

In re Application of	:	
Lu et al.	:	DECISION ON PETITION
Application No. 12/405,150	:	TO WITHDRAW
Filed: March 16, 2009	:	FROM RECORD
Attorney Docket No. ARBOR VITA-700	:	

This is a decision on the Request to Withdraw as attorney or agent of record under 37 C.F.R. § 1.36(b), filed May 2, 2011.

The request is **DISMISSED** as involving a moot issue.

A review of the file record indicates that the power of attorney to the attorneys/agents associated with Customer Number 20350 was revoked by the assignee of the patent application on May 13, 2011. Accordingly, the request to withdraw under 37 C.F.R. § 1.36(b) is moot.

All future communications from the Office will be directed to the below-listed address until otherwise properly notified.

Telephone inquires concerning this decision should be directed to the undersigned at 571-272-3206. All other inquires concerning either the examination or status of the application should be directed to the Technology Center.

/Liana Walsh/
Liana Walsh
Petitions Examiner
Office of Petitions

cc: WILSON, SONSINI, GOODRICH & ROSATI
650 PAGE MILL ROAD
PALO ALTO CA 94304-1050

Doc Code: PPH.PCT.652
Document Description: Petition to make special under PCT-Patent Pros Hwy

PTO/SB/20PCT-KR (06-10)
Approved for use through 01/31/2012. OMB 0651-0058
U.S. Patent and Trademark Office; U. S. DEPARTMENT OF COMMERCE
Under the Paperwork Reduction Act of 1995, no persons are required to respond to a collection of information unless it displays a valid OMB control number.

REQUEST FOR PARTICIPATION IN THE PATENT COOPERATION TREATY - PATENT PROSECUTION HIGHWAY (PCT-PPH) PILOT PROGRAM BETWEEN THE KOREAN INTELLECTUAL PROPERTY OFFICE (KIPO) AND THE USPTO

Application No:	12/405,188	Filing date:	March 16, 2009
First Named Inventor:	Ronald L. Wilson		
Title of the Invention:	LOWER-BODY GARMENT HAVING A SECURE WAIST ASSEMBLY		

THIS REQUEST FOR PARTICIPATION IN THE PCT-PPH PILOT PROGRAM ALONG WITH THE REQUIRED DOCUMENTS MUST BE SUBMITTED VIA EFS-WEB. INFORMATION REGARDING EFS-WEB IS AVAILABLE AT HTTP://WWW.USPTO.GOV/EBC/EFS_HELP.HTML

APPLICANT HEREBY REQUESTS PARTICIPATION IN THE PCT-PPH PROGRAM AND PETITIONS TO MAKE THE ABOVE-IDENTIFIED APPLICATION SPECIAL UNDER THE PCT-PPH PROGRAM.

The above-identified application is (1) a national stage entry of the corresponding PCT application, or (2) a national stage entry of another PCT application which claims priority to the corresponding PCT application, or (3) a national application that claims domestic/ foreign priority to the corresponding PCT application, or (4) a national application which forms the basis for the priority claim in the corresponding PCT application, or (5) a continuing application of a U.S. application that satisfies one of (1) to (4) above, or (6) a U.S. application that claims domestic benefit to a U.S. provisional application which forms the basis for the priority claim in the corresponding PCT application.

The corresponding PCT application number(s) is/are: US2010/026620

The international filing date of the corresponding PCT application(s) is/are: March 9, 2010

I. List of Required Documents:

a. **A copy of the latest international work product (WO/ISA, WO/IPEA, or IPER) in the above–identified corresponding PCT application(s)**

☑ Is attached.

☐ Is not attached because the document is already in the U.S. application.

b. **A copy of all claims which were indicated as having novelty, inventive step and industrial applicability in the above-identified corresponding PCT application(s).**

☐ Is attached.

☑ Is not attached because the document is already in the U.S. application.

c. **English translations of the documents in a. and b. above are attached (if the documents are not in the English language). A statement that the English translation is accurate is attached for the document in b. above.**

This collection of information is required by 35 U.S.C. 119, 37 CFR 1.55, and 37 CFR 1.102(d). The information is required to obtain or retain a benefit by the public, which is to file (and by the USPTO to process) an application. Confidentiality is governed by 35 U.S.C. 122 and 37 CFR 1.11 and 1.14. This collection is estimated to take 2 hours to complete, including gathering, preparing, and submitting the completed application form to the USPTO. Time will vary depending upon the individual case. Any comments on the amount of time you require to complete this form and/or suggestions for reducing this burden should be sent to the Chief Information Officer, U.S. Patent and Trademark Office, U.S. Department of Commerce, P.O. Box 1450, Alexandria, VA 22313-1450. DO NOT SEND FEES OR COMPLETED FORMS TO THIS ADDRESS.

PTO/SB/20PCT-KR (06-10)
Approved for use through 01/31/2012. OMB 0651-0058
U.S.Patent and Trademark Office; U.S. DEPARTMENT OF COMMERCE
Under the Paperwork Reduction Act of 1995, no persons are required to respond to a collection of information unless it displays a valid OMB control number.

REQUEST FOR PARTICIPATION IN THE PCT-PPH PILOT PROGRAM BETWEEN THE KIPO AND THE USPTO

(continued)

Application No.:	12/432,265
First Named Inventor:	Ronald L. Wilson

d. **(1) An information disclosure statement listing the documents cited in the international work products (ISR, WO/ISA, WO/IPEA, IPER) of the corresponding PCT application.**

☑ Is attached

☐ Has already been filed in the above-identified U.S. application on _____

(2) Copies of all documents (except) for U.S. patents or U.S. patent application publications)

☑ Are attached.

☐ Have already been filed in the above-identified U.S. application on _____

II. Claims Correspondence Table:

Claims in US Application	Patentable Claims in the corresponding PCT Application	Explanation regarding the correspondence
1-25	1-25	Claims are identical

III. All the claims in the US application sufficiently correspond to the patentable claims in the corresponding PCT application.

Signature /kyri tsircou/	Date 01/31/2011
Name (Print/Typed) Kyriacos Tsircou	Registration Number 53705

Privacy Act Statement

The **Privacy Act of 1974 (P.L. 93-579)** requires that you be given certain information in connection with your submission of the attached form related to a patent application or patent. Accordingly, pursuant to the requirements of the Act, please be advised that: (1) the general authority for the collection of this information is 35 U.S.C. 2(b)(2); (2) furnishing of the information solicited is voluntary; and (3) the principal purpose for which the information is used by the U.S. Patent and Trademark Office is to process and/or examine your submission related to a patent application or patent. If you do not furnish the requested information, the U.S. Patent and Trademark Office may not be able to process and/or examine your submission, which may result in termination of proceedings or abandonment of the application or expiration of the patent.

The information provided by you in this form will be subject to the following routine uses:

1. The information on this form will be treated confidentially to the extent allowed under the Freedom of Information Act (5 U.S.C. 552) and the Privacy Act (5 U.S.C 552a). Records from this system of records may be disclosed to the Department of Justice to determine whether disclosure of these records is required by the Freedom of Information Act.
2. A record from this system of records may be disclosed, as a routine use, in the course of presenting evidence to a court, magistrate, or administrative tribunal, including disclosures to opposing counsel in the course of settlement negotiations.
3. A record in this system of records may be disclosed, as a routine use, to a Member of Congress submitting a request involving an individual, to whom the record pertains, when the individual has requested assistance from the Member with respect to the subject matter of the record.
4. A record in this system of records may be disclosed, as a routine use, to a contractor of the Agency having need for the information in order to perform a contract. Recipients of information shall be required to comply with the requirements of the Privacy Act of 1974, as amended, pursuant to 5 U.S.C. 552a(m).
5. A record related to an International Application filed under the Patent Cooperation Treaty in this system of records may be disclosed, as a routine use, to the International Bureau of the World Intellectual Property Organization, pursuant to the Patent Cooperation Treaty.
6. A record in this system of records may be disclosed, as a routine use, to another federal agency for purposes of National Security review (35 U.S.C. 181) and for review pursuant to the Atomic Energy Act (42 U.S.C. 218(c)).
7. A record from this system of records may be disclosed, as a routine use, to the Administrator, General Services, or his/her designee, during an inspection of records conducted by GSA as part of that agency's responsibility to recommend improvements in records management practices and programs, under authority of 44 U.S.C. 2904 and 2906. Such disclosure shall be made in accordance with the GSA regulations governing inspection of records for this purpose, and any other relevant (*i.e.*, GSA or Commerce) directive. Such disclosure shall not be used to make determinations about individuals.
8. A record from this system of records may be disclosed, as a routine use, to the public after either publication of the application pursuant to 35 U.S.C. 122(b) or issuance of a patent pursuant to 35 U.S.C. 151. Further, a record may be disclosed, subject to the limitations of 37 CFR 1.14, as a routine use, to the public if the record was filed in an application which became abandoned or in which the proceedings were terminated and which application is referenced by either a published application, an application open to public inspection or an issued patent.
9. A record from this system of records may be disclosed, as a routine use, to a Federal, State, or local law enforcement agency, if the USPTO becomes aware of a violation or potential violation of law or regulation.

UNITED STATES PATENT AND TRADEMARK OFFICE

UNITED STATES DEPARTMENT OF COMMERCE
United States Patent and Trademark Office
Address: COMMISSIONER FOR PATENTS
P.O. Box 1450
Alexandria, Virginia 22313-1450
www.uspto.gov

APPLICATION NO.	FILING DATE	FIRST NAMED INVENTOR	ATTORNEY DOCKET NO.	CONFIRMATION NO.
12/405,188	03/16/2009	Ronald L. Wilson II	TMX-00366	3113

60780 7590 02/01/2011

TSIRCOU INTELLECTUAL PROPERTY LAW
655 Central Ave., 17th Floor
Glendale, CA 91203

EXAMINER	
TOMPKINS, ALISSA JILL	
ART UNIT	**PAPER NUMBER**
3765	

MAIL DATE	DELIVERY MODE
02/01/2011	PAPER

Please find below and/or attached an Office communication concerning this application or proceeding.

The time period for reply, if any, is set in the attached communication.

UNITED STATES PATENT AND TRADEMARK OFFICE

Commissioner for Patents
United States Patent and Trademark Office
P.O. Box 1450
Alexandria, VA 22313-1450
www.uspto.gov

TSIRCOU INTELLECTUAL PROPERTY LAW
655 Central Ave., 17th Floor
Glendale CA 91203

In re Application of	:	
WILSON, RONALD L. I I	:	DECISION ON REQUEST TO
Application No. 12/405,188	:	PARTICIPATE IN PATENT
Filed: March 16, 2009	:	PCT/PROSECUTION HIGHWAY
Attorney Docket No. TMX00366	:	PROGRAM AND PETITION
Title: LOWER-BODY GARMENT HAVING A SECURE WAIST ASSEMBLY	:	37 CFR 1.102(a)

This is a decision on the request to participate in the Patent Prosecution Highway (PPH) program and the petition under 37 CFR 1.102(a), filed Jan. 31, 2011, to make the above-identified application special.

The request and petition are granted.

A grantable request to participate in the PPH program and petition to make special require:
(1) The U.S. application must disclose an eligible relationship to one or more PCT applications filed in the KIPO, JPO, EPO or USPTO;
(2) Applicant must submit a copy of the allowable/patentable claim(s) from the PCT application(s) latest international work product (the written opinion or the IPER) along with an English translation thereof and a statement that the English translation is accurate;
(3) All the claims in the U.S. application must sufficiently correspond or be amended to sufficiently correspond to the allowable/patentable claim(s) in the PCT application(s);
(4) Examination of the U.S. application has not begun;
(5) Applicant must submit a copy of the latest international work product from the PCT application containing the allowable/patentable claim(s) along with an English translation thereof and a statement that the English translation is accurate; and
(6) Applicant must submit an IDS listing the documents cited by the PCT examiner in the international work product along with copies of documents except U.S. patents or U.S. patent application publications.

In light of the petition being properly submitted, the request to participate in the PPH program and the petition comply with the above requirements. Accordingly, the above-identified application has been accorded "special" status.

The applicant is encouraged to cite and submit all relevant prior art references, if any, to facilitate examination in this application.

Other inquiries concerning the examination or status of the application should be directed to Gary Welch, the SPE of Art Unit 3765 and 571-272-4996 for Class 2/466 and also accessible in the PAIR system at http://www.uspto.gov/ebc.index.html.

All other inquiries concerning the examination or status of the application should be directed to the Patent Application Information Retrieval (PAIR) system.

This application will be forwarded and docketed to an examiner for action on the merits commensurate with this decision.

Telephone inquiries concerning this decision should be directed to Henry C. Yuen, at 571-272-4856.

The petition is **granted.**

/Henry C. Yuen/

_____

Henry C. Yuen, Special Programs Examiner
Technology Center 3700 – Mechanical Engineering,
Manufacturing and Products
571-272-4856

Doc Code: PPH.PCT.652
Document Description: Petition to make special under PCT-Patent Pros Hwy

PTO/SB/20PCT-FI (01-11)
Approved for use through 01/31/2012. OMB 0651-0058
U.S. Patent and Trademark Office; U. S. DEPARTMENT OF COMMERCE
Under the Paperwork Reduction Act of 1995, no persons are required to respond to a collection of information unless it displays a valid OMB control number.

REQUEST FOR PARTICIPATION IN THE PATENT COOPERATION TREATY - PATENT PROSECUTION HIGHWAY (PCT-PPH) PILOT PROGRAM BETWEEN THE NATIONAL BOARD OF PATENTS AND REGISTRATION OF FINLAND (NBPR) AND THE USPTO

Application No:	12/405,208	Filing date:	March 16, 2009
First Named Inventor:	Gilles Khouzam		
Title of the Invention:	HOSTED APPLICATION PLATFORM WITH EXTENSIBLE MEDIA FORMAT		

THIS REQUEST FOR PARTICIPATION IN THE PCT-PPH PILOT PROGRAM ALONG WITH THE REQUIRED DOCUMENTS MUST BE SUBMITTED VIA EFS-WEB. INFORMATION REGARDING EFS-WEB IS AVAILABLE AT HTTP://WWW.USPTO.GOV/EBC/EFS_HELP.HTML

APPLICANT HEREBY REQUESTS PARTICIPATION IN THE PCT-PPH PROGRAM AND PETITIONS TO MAKE THE ABOVE-IDENTIFIED APPLICATION SPECIAL UNDER THE PCT-PPH PROGRAM.

The above-identified application is (1) a national stage entry of the corresponding PCT application, or (2) a national stage entry of another PCT application which claims priority to the corresponding PCT application, or (3) a national application that claims domestic/ foreign priority to the corresponding PCT application, or (4) a national application which forms the basis for the priority claim in the corresponding PCT application, or (5) a continuing application of a U.S. application that satisfies one of (1) to (4) above, or (6) a U.S. application that claims domestic benefit to a U.S. provisional application which forms the basis for the priority claim in the corresponding PCT application.

The corresponding PCT application number(s) is/are: PCT/US10/26702

The international filing date of the corresponding PCT application(s) is/are: March 9, 2010

I. List of Required Documents:

a. **A copy of the latest international work product (WO/ISA, WO/IPEA, or IPER) in the above–identified corresponding PCT application(s)**

☑ Is attached.

☐ Is not attached because the document is already in the U.S. application.

b. **A copy of all claims which were indicated as having novelty, inventive step and industrial applicability in the above-identified corresponding PCT application(s).**

☑ Is attached.

☐ Is not attached because the document is already in the U.S. application.

c. **English translations of the documents in a. and b. above are attached (if the documents are not in the English language). A statement that the English translation is accurate is attached for the document in b. above.**

This collection of information is required by 35 U.S.C. 119, 37 CFR 1.55, and 37 CFR 1.102(d). The information is required to obtain or retain a benefit by the public, which is to file (and by the USPTO to process) an application. Confidentiality is governed by 35 U.S.C. 122 and 37 CFR 1.11 and 1.14. This collection is estimated to take 2 hours to complete, including gathering, preparing, and submitting the completed application form to the USPTO. Time will vary depending upon the individual case. Any comments on the amount of time you require to complete this form and/or suggestions for reducing this burden should be sent to the Chief Information Officer, U.S. Patent and Trademark Office, U.S. Department of Commerce, P.O. Box 1450, Alexandria, VA 22313-1450. DO NOT SEND FEES OR COMPLETED FORMS TO THIS ADDRESS.

PTO/SB/20PCT-FI (01-11)
Approved for use through 01/31/2012. OMB 0651-0058
U.S.Patent and Trademark Office; U.S. DEPARTMENT OF COMMERCE
Under the Paperwork Reduction Act of 1995, no persons are required to respond to a collection of information unless it displays a valid OMB control number.

REQUEST FOR PARTICIPATION IN THE PCT-PPH PILOT PROGRAM BETWEEN THE NBPR AND THE USPTO

(continued)

Application No.:	12/405,208
First Named Inventor:	Gilles Khouzam

d. **(1) An information disclosure statement listing the documents cited in the international work products (ISR, WO/ISA, WO/IPEA, IPER) of the corresponding PCT application.**

☐ Is attached

☑ Has already been filed in the above-identified U.S. application on November 4, 2010

(2) Copies of all documents (except) for U.S. patents or U.S. patent application publications)

☑ Are attached.

☐ Have already been filed in the above-identified U.S. application on _____

II. Claims Correspondence Table:

Claims in US Application	Patentable Claims in the corresponding PCT Application	Explanation regarding the correspondence
1-15	1-15	Claims are identical except for numerical references that refer to the drawings in the PCT application
16	N/A	claim canceled in preliminary amendment filed 4/28/11
17	N/A	claim canceled in preliminary amendment filed 4/28/11
18	N/A	claim canceled in preliminary amendment filed 4/28/11
19	N/A	claim canceled in preliminary amendment filed 4/28/11
20	N/A	claim canceled in preliminary amendment filed 4/28/11

III. All the claims in the US application sufficiently correspond to the patentable claims in the corresponding PCT application.

Signature /Damon A. Rieth/	Date April 28, 2011
Name (Print/Typed) Damon A. Rieth	Registration Number 52,167

Privacy Act Statement

The **Privacy Act of 1974 (P.L. 93-579)** requires that you be given certain information in connection with your submission of the attached form related to a patent application or patent. Accordingly, pursuant to the requirements of the Act, please be advised that: (1) the general authority for the collection of this information is 35 U.S.C. 2(b)(2); (2) furnishing of the information solicited is voluntary; and (3) the principal purpose for which the information is used by the U.S. Patent and Trademark Office is to process and/or examine your submission related to a patent application or patent. If you do not furnish the requested information, the U.S. Patent and Trademark Office may not be able to process and/or examine your submission, which may result in termination of proceedings or abandonment of the application or expiration of the patent.

The information provided by you in this form will be subject to the following routine uses:

1. The information on this form will be treated confidentially to the extent allowed under the Freedom of Information Act (5 U.S.C. 552) and the Privacy Act (5 U.S.C 552a). Records from this system of records may be disclosed to the Department of Justice to determine whether disclosure of these records is required by the Freedom of Information Act.
2. A record from this system of records may be disclosed, as a routine use, in the course of presenting evidence to a court, magistrate, or administrative tribunal, including disclosures to opposing counsel in the course of settlement negotiations.
3. A record in this system of records may be disclosed, as a routine use, to a Member of Congress submitting a request involving an individual, to whom the record pertains, when the individual has requested assistance from the Member with respect to the subject matter of the record.
4. A record in this system of records may be disclosed, as a routine use, to a contractor of the Agency having need for the information in order to perform a contract. Recipients of information shall be required to comply with the requirements of the Privacy Act of 1974, as amended, pursuant to 5 U.S.C. 552a(m).
5. A record related to an International Application filed under the Patent Cooperation Treaty in this system of records may be disclosed, as a routine use, to the International Bureau of the World Intellectual Property Organization, pursuant to the Patent Cooperation Treaty.
6. A record in this system of records may be disclosed, as a routine use, to another federal agency for purposes of National Security review (35 U.S.C. 181) and for review pursuant to the Atomic Energy Act (42 U.S.C. 218(c)).
7. A record from this system of records may be disclosed, as a routine use, to the Administrator, General Services, or his/her designee, during an inspection of records conducted by GSA as part of that agency's responsibility to recommend improvements in records management practices and programs, under authority of 44 U.S.C. 2904 and 2906. Such disclosure shall be made in accordance with the GSA regulations governing inspection of records for this purpose, and any other relevant (*i.e.*, GSA or Commerce) directive. Such disclosure shall not be used to make determinations about individuals.
8. A record from this system of records may be disclosed, as a routine use, to the public after either publication of the application pursuant to 35 U.S.C. 122(b) or issuance of a patent pursuant to 35 U.S.C. 151. Further, a record may be disclosed, subject to the limitations of 37 CFR 1.14, as a routine use, to the public if the record was filed in an application which became abandoned or in which the proceedings were terminated and which application is referenced by either a published application, an application open to public inspection or an issued patent.
9. A record from this system of records may be disclosed, as a routine use, to a Federal, State, or local law enforcement agency, if the USPTO becomes aware of a violation or potential violation of law or regulation.

UNITED STATES PATENT AND TRADEMARK OFFICE

UNITED STATES DEPARTMENT OF COMMERCE
United States Patent and Trademark Office
Address: COMMISSIONER FOR PATENTS
P.O. Box 1450
Alexandria, Virginia 22313-1450
www.uspto.gov

APPLICATION NO.	FILING DATE	FIRST NAMED INVENTOR	ATTORNEY DOCKET NO.	CONFIRMATION NO.
12/405,208	03/16/2009	Gilles Khouzam	326006.01	3152

69316 7590 07/08/2011
MICROSOFT CORPORATION
ONE MICROSOFT WAY
REDMOND, WA 98052

EXAMINER	
DAM, TUAN QUANG	
ART UNIT	**PAPER NUMBER**
2192	

NOTIFICATION DATE	DELIVERY MODE
07/08/2011	ELECTRONIC

Please find below and/or attached an Office communication concerning this application or proceeding.

The time period for reply, if any, is set in the attached communication.

Notice of the Office communication was sent electronically on above-indicated "Notification Date" to the following e-mail address(es):

vffiling@microsoft.com
stevensp@microsoft.com
ntovar@MICROSOFT.COM

UNITED STATES PATENT AND TRADEMARK OFFICE

Commissioner for Patents
United States Patent and Trademark Office
P.O. Box 1450
Alexandria, VA 22313-1450
www.uspto.gov

MICROSOFT CORPORATION
ONE MICROSOFT WAY
REDMOND WA 98052

In re Application of: KHOUZAM et al.
Application No. 12/405,208
Atty Docket #: **326006.01**
Filed: March 16, 2009
For: **HOSTED APPLICATION PLATFORM WITH EXTENSIBLE MEDIA FORMAT**

DECISION ON REQUEST TO PARTICIPATE IN PATENT PROSECUTION HIGHWAY PROGRAM AND PETITION TO MAKE SPECIAL UNDER 37 CFR 1.102(a)

This is a decision on the request to participate in the PCT-Patent Prosecution Highway **(PCT-PPH)** pilot program and the petition under 37 CFR 1.102(a), filed April 28, 2011 to make the above- identified application special.

The petition is **GRANTED.**

A grantable request to participate in the PPH program and petition to make special require:

(1) The U.S. application is
(a) a national stage entry of the corresponding PCT application

Or

(b) a national application which forms the basis for the priority claim in the corresponding PCT application

Or

(c) *a* national stage entry of another PCT application (which can be filed in any competent receiving office) which claims priority to the corresponding PCT application

Or

(d) a national application claiming foreign domestic priority to the corresponding PCT application.
Applications subject to a secrecy order (35U.S.C.181) are excluded and not subject to participation in the PCT-PPH pilot program.

Or

(e) a continuing application (continuation, divisional, or continuation-in-part) of the U.S. application which satisfies one of the above (a) to (d) scenarios.

(2) The latest work product in the international phase of the PCT application corresponding to the U.S. application, namely the WO/ISA, or the WO/IPEA, or the IPER, indicates at least one claim in the PCT application has novelty, inventive step and industrial applicability. In case any observation is described in Box VIII of the WO/ISA, or the WO/IPEA, or the IPER which forms the basis for the PCT-PPH request, applicant must identify and explain why the claim(s) is/are not subject to any observation described in Box VIII irrespective of whether an amendment is submitted to correct the observation described in Box VIII. The U.S. application will not be eligible to participate in the PCT-PPH pilot program if applicant does not identify and explain why the claim(s) is/are not subject to the observation described in Box VIII.

Applicant may not file a request to participate in the PCT-PPH pilot program on the basis of an International Search Report (ISR) only.

(3) Applicant must:

a. Ensure all the claims in the U.S. application sufficiently correspond or be amended to sufficiently correspond to one or more of those claims indicated as having novelty, inventive step and industrial applicability and free of any observation described in Box VIII in the latest work product of the corresponding PCT application and

b. Submit a claims correspondence table in English;

The USPTO will accept claims written in dependent form in the U.S. application which are narrower in scope than the claims indicated as having novelty, inventive step and industrial applicability and free of any observation described in Box VIII in the latest work product of the corresponding PCT application.

(4) Substantive Examination of the U.S. application has not begun;

(5) Applicant must submit a copy of:

a. the latest international work product, WO/ISA, or WO/IPEA or PER, which indicated that the claim(s) has/have novelty, inventive step and industrial applicability along with an English translation thereof if the copy of the latest international work product is not in the English language, unless the U.S. application and the corresponding PCT application satisfy the relationship noted in (l)(a) above.

(6) Applicant must submit a copy of:

a. the claims from the corresponding PCT application which were indicated as having novelty, inventive step and industrial applicability in the latest work product of the PCT application,
b. an English translation of the claims and
c. a statement that the English translation is accurate.

If the claims in the U.S. application are identical to the claims from the corresponding PCT application, and are in the English language, applicant may just indicate such in the PCT-PPH request and it will not be necessary for applicant to submit a copy of the claims from the corresponding PCT application.

(7) Applicant must submit:

a. An IDS listing the documents cited in the work products in the international phase of the PCT application corresponding to the U.S. application, namely the WO/ISA, or the WO/IPEA, or the IPER,(unless already submitted in this application)
b. Copies of the documents except U.S. patents or U.S. patent application publications (unless already submitted in this application);

The request to participate in the PPH pilot program and petition are found to comply with the above requirements. Accordingly, the above-identified application has been accorded "special" status.

Telephone inquiries concerning this decision should be directed to Mano Padmanabhan at 571-272-4210.

All other inquiries concerning the examination or status of the application is accessible in the PAIR system at http://www.uspto.gov/ebc/index.html.

The application is being forwarded to the examiner for action on the merits commensurate with this decision.

/Mano Padmanabhan/

_____

Mano Padmanabhan
Quality Assurance Specialist, Technology Center 2100, Workgroup 2180
571-272-4210

Doc Code: PPH.PCT.652
Document Description: Petition to make special under PCT-Patent Pros Hwy

PTO/SB/20PCT-FI (01-11)
Approved for use through 01/31/2012. OMB 0651-0058
U.S. Patent and Trademark Office; U. S. DEPARTMENT OF COMMERCE
Under the Paperwork Reduction Act of 1995, no persons are required to respond to a collection of information unless it displays a valid OMB control number.

REQUEST FOR PARTICIPATION IN THE PATENT COOPERATION TREATY - PATENT PROSECUTION HIGHWAY (PCT-PPH) PILOT PROGRAM BETWEEN THE NATIONAL BOARD OF PATENTS AND REGISTRATION OF FINLAND (NBPR) AND THE USPTO

Application No:	12/405,213	Filing date:	March 16, 2009
First Named Inventor:	Kenneth L. Young		
Title of the Invention:	SMOOTH LAYOUT ANIMATION OF CONTINUOUS AND NON-CONTINUOUS PROPERTIES		

THIS REQUEST FOR PARTICIPATION IN THE PCT-PPH PILOT PROGRAM ALONG WITH THE REQUIRED DOCUMENTS MUST BE SUBMITTED VIA EFS-WEB. INFORMATION REGARDING EFS-WEB IS AVAILABLE AT HTTP://WWW.USPTO.GOV/EBC/EFS_HELP.HTML

APPLICANT HEREBY REQUESTS PARTICIPATION IN THE PCT-PPH PROGRAM AND PETITIONS TO MAKE THE ABOVE-IDENTIFIED APPLICATION SPECIAL UNDER THE PCT-PPH PROGRAM.

The above-identified application is (1) a national stage entry of the corresponding PCT application, or (2) a national stage entry of another PCT application which claims priority to the corresponding PCT application, or (3) a national application that claims domestic/ foreign priority to the corresponding PCT application, or (4) a national application which forms the basis for the priority claim in the corresponding PCT application, or (5) a continuing application of a U.S. application that satisfies one of (1) to (4) above, or (6) a U.S. application that claims domestic benefit to a U.S. provisional application which forms the basis for the priority claim in the corresponding PCT application.

The corresponding PCT application number(s) is/are: PCT/US10/26706

The international filing date of the corresponding PCT application(s) is/are: March 9, 2010

I. List of Required Documents:

a. **A copy of the latest international work product (WO/ISA, WO/IPEA, or IPER) in the above–identified corresponding PCT application(s)**

☑ Is attached.

☐ Is not attached because the document is already in the U.S. application.

b. **A copy of all claims which were indicated as having novelty, inventive step and industrial applicability in the above-identified corresponding PCT application(s).**

☑ Is attached.

☐ Is not attached because the document is already in the U.S. application.

c. **English translations of the documents in a. and b. above are attached (if the documents are not in the English language). A statement that the English translation is accurate is attached for the document in b. above.**

This collection of information is required by 35 U.S.C. 119, 37 CFR 1.55, and 37 CFR 1.102(d). The information is required to obtain or retain a benefit by the public, which is to file (and by the USPTO to process) an application. Confidentiality is governed by 35 U.S.C. 122 and 37 CFR 1.11 and 1.14. This collection is estimated to take 2 hours to complete, including gathering, preparing, and submitting the completed application form to the USPTO. Time will vary depending upon the individual case. Any comments on the amount of time you require to complete this form and/or suggestions for reducing this burden should be sent to the Chief Information Officer, U.S. Patent and Trademark Office, U.S. Department of Commerce, P.O. Box 1450, Alexandria, VA 22313-1450. DO NOT SEND FEES OR COMPLETED FORMS TO THIS ADDRESS.

PTO/SB/20PCT-FI (01-11)
Approved for use through 01/31/2012. OMB 0651-0058
U.S.Patent and Trademark Office; U.S. DEPARTMENT OF COMMERCE
Under the Paperwork Reduction Act of 1995, no persons are required to respond to a collection of information unless it displays a valid OMB control number.

REQUEST FOR PARTICIPATION IN THE PCT-PPH PILOT PROGRAM BETWEEN THE NBPR AND THE USPTO

(continued)

Application No.:	12/405,213
First Named Inventor:	Kenneth L. Young

d. **(1) An information disclosure statement listing the documents cited in the international work products (ISR, WO/ISA, WO/IPEA, IPER) of the corresponding PCT application.**

☐ Is attached

☑ Has already been filed in the above-identified U.S. application on November 11, 2010

(2) Copies of all documents (except) for U.S. patents or U.S. patent application publications)

☑ Are attached.

☐ Have already been filed in the above-identified U.S. application on _____

II. Claims Correspondence Table:

Claims in US Application	Patentable Claims in the corresponding PCT Application	Explanation regarding the correspondence
1-14	1-14	Claims are identical except for numerical references that refer to the drawings in the PCT application
15		US Claim 15 is patentable because it is dependent upon claim 12, which the ISR has deemed patentable in corresponding PCT claim 12.
16	15	Claims are identical except for numerical references that refer to the drawings in the PCT application
17		US Claim 17 is patentable because it is dependent upon claim 12, which the ISR has deemed patentable in corresponding PCT claim 12.
18	N/A	Claim canceled in preliminary amendment filed April 29, 2011
19	N/A	Claim canceled in preliminary amendment filed April 29, 2011
20	N/A	Claim canceled in preliminary amendment filed April 29, 2011

III. All the claims in the US application sufficiently correspond to the patentable claims in the corresponding PCT application.

Signature /Damon A. Rieth/	Date April 29, 2011
Name (Print/Typed) Damon A. Rieth	Registration Number 52,167

Privacy Act Statement

The **Privacy Act of 1974 (P.L. 93-579)** requires that you be given certain information in connection with your submission of the attached form related to a patent application or patent. Accordingly, pursuant to the requirements of the Act, please be advised that: (1) the general authority for the collection of this information is 35 U.S.C. 2(b)(2); (2) furnishing of the information solicited is voluntary; and (3) the principal purpose for which the information is used by the U.S. Patent and Trademark Office is to process and/or examine your submission related to a patent application or patent. If you do not furnish the requested information, the U.S. Patent and Trademark Office may not be able to process and/or examine your submission, which may result in termination of proceedings or abandonment of the application or expiration of the patent.

The information provided by you in this form will be subject to the following routine uses:

1. The information on this form will be treated confidentially to the extent allowed under the Freedom of Information Act (5 U.S.C. 552) and the Privacy Act (5 U.S.C 552a). Records from this system of records may be disclosed to the Department of Justice to determine whether disclosure of these records is required by the Freedom of Information Act.
2. A record from this system of records may be disclosed, as a routine use, in the course of presenting evidence to a court, magistrate, or administrative tribunal, including disclosures to opposing counsel in the course of settlement negotiations.
3. A record in this system of records may be disclosed, as a routine use, to a Member of Congress submitting a request involving an individual, to whom the record pertains, when the individual has requested assistance from the Member with respect to the subject matter of the record.
4. A record in this system of records may be disclosed, as a routine use, to a contractor of the Agency having need for the information in order to perform a contract. Recipients of information shall be required to comply with the requirements of the Privacy Act of 1974, as amended, pursuant to 5 U.S.C. 552a(m).
5. A record related to an International Application filed under the Patent Cooperation Treaty in this system of records may be disclosed, as a routine use, to the International Bureau of the World Intellectual Property Organization, pursuant to the Patent Cooperation Treaty.
6. A record in this system of records may be disclosed, as a routine use, to another federal agency for purposes of National Security review (35 U.S.C. 181) and for review pursuant to the Atomic Energy Act (42 U.S.C. 218(c)).
7. A record from this system of records may be disclosed, as a routine use, to the Administrator, General Services, or his/her designee, during an inspection of records conducted by GSA as part of that agency's responsibility to recommend improvements in records management practices and programs, under authority of 44 U.S.C. 2904 and 2906. Such disclosure shall be made in accordance with the GSA regulations governing inspection of records for this purpose, and any other relevant (*i.e.*, GSA or Commerce) directive. Such disclosure shall not be used to make determinations about individuals.
8. A record from this system of records may be disclosed, as a routine use, to the public after either publication of the application pursuant to 35 U.S.C. 122(b) or issuance of a patent pursuant to 35 U.S.C. 151. Further, a record may be disclosed, subject to the limitations of 37 CFR 1.14, as a routine use, to the public if the record was filed in an application which became abandoned or in which the proceedings were terminated and which application is referenced by either a published application, an application open to public inspection or an issued patent.
9. A record from this system of records may be disclosed, as a routine use, to a Federal, State, or local law enforcement agency, if the USPTO becomes aware of a violation or potential violation of law or regulation.

PATENT

First Named Inventor: Kenneth L. Young
Application No.: 12/405,213
Filed: March 16, 2009
Customer No.: 69316
Attorney Docket No.: 326727.01
Group Art Unit: 2174
Examiner: PACK, CONRAD
Confirmation Number: 3162
Title: SMOOTH LAYOUT ANIMATION OF CONTINUOUS AND NON-CONTINUOUS PROPERTIES

Commissioner for Patents
P.O. Box 1460
Alexandria, VA 22313-1450

Statement on Request for Participation in the PCT-Patent Prosecution Highway Pilot Program

Dear Sir:

Applicant states that the claims in the US application were amended to sufficiently correspond to the claims in the PCT application. Additionally, applicant would like to bring to attention that the US dependent claims that were omitted or combined with another dependent claim in the corresponding PCT application should be deemed patentable because their respective independent claim was deemed patentable in the international search report. Therefore, applicant respectfully requests the omitted dependent claims in the US application also be considered.

Additionally, applicant would like to bring to attention the formatting differences in the PCT claims, specifically the numerical references that refer to the drawings. For your convenience, a copy of the claims in the PCT application is included.

Accordingly, applicant requests the petition to participate in the PCT – Patent Prosecution Highway Pilot Program be granted. If you have any questions, please do not hesitate to call the Applicant's attorney at the telephone number listed below.

Respectfully submitted,

Date: April 29, 2011

By: /Damon A. Rieth/

Atty: Damon A. Rieth
Reg. No.: 52,167
Direct telephone: (425) 421-2377
Microsoft Corporation
One Microsoft Way
Redmond WA 98052-6399

CERTIFICATE OF MAILING OR TRANSMISSION
(Under 37 CFR § 1.8(a)) or ELECTRONIC FILING

I hereby certify that this correspondence is being electronically deposited with the USPTO via EFS-Web on the date shown below:

April 29, 2011
Date

/Eric Matt/
Eric Matt

PATENT COOPERATION TREATY

From the INTERNATIONAL SEARCHING AUTHORITY

To:

MICROSOFT CORPORATION

Attn - Virginia Coggan (vcoggan) LCA - International Patents
One Microsoft Way - 8/1188 Redmond Washington 98052-6399 USA

PCT

NOTIFICATION OF TRANSMITTAL OF THE INTERNATIONAL SEARCH REPORT AND THE WRITTEN OPINION OF THE INTERNATIONAL SEARCHING AUTHORITY, OR THE DECLARATION

(PCT Rule 44.1)

Applicant's or agent's file reference 326727-02	Date of mailing *(day/month/year)* 28 SEPTEMBER 2010 (28.09.2010) **FOR FURTHER ACTION** See paragraphs 1 and 4 below
International application No. **PCT/US2010/026706**	International filing date *(day/month/year)* **09 MARCH 2010 (09.03.2010)**

Applicant

MICROSOFT CORPORATION

1. ☒ The applicant is hereby notified that the international search report and the written opinion of the International Searching Authority have been established and are transmitted herewith.

   Filing of amendments and statement under Article 19:

   The applicant is entitled, if he so wishes, to amend the claims of the international application (see Rule 46):

   When? The time limit for filing such amendments is normally two months from the date of transmittal of the international search report.

   Where? Directly to the International Bureau of WIPO, 34 chemin des Colombettes 1211 Geneva 20, Switzerland, Facsimile No.: +41 22 338 82 70

   For more detailed instructions, see *PCT Applicant's Guide*, International Phase, paragraphs 9.004 . 9.011.

2. ☐ The applicant is hereby notified that no international search report will be established and that the declaration under Article 17(2)(a) to that effect and the written opinion of the International Searching Authority are transmitted herewith.

3. ☐ **With regard to any protest** against payment of (an) additional fee(s) under Rule 40.2, the applicant is notified that:

   ☐ the protest together with the decision thereon has been transmitted to the International Bureau together with any request to forward the texts of both the protest and the decision thereon to the designated Offices.

   ☐ no decision has been made yet on the protest; the applicant will be notified as soon as a decision is made.

4. **Reminders**

The applicant may submit comments on an informal basis on the written opinion of the International Searching Authority to the International Bureau. The International Bureau will send a copy of such comments to all designated Offices unless an international preliminary examination report has been or is to be established. Following the expiration of 30 months from the priority date, these comments will also be made available to the public.

Shortly after the expiration of **18 months** from the priority date, the international application will be published by the International Bureau. If the applicant wishes to avoid or postpone publication, a notice of withdrawal of the international application, or of the priority claim, must reach the International Bureau before the completion of the technical preparations for international publication (Rules 90bis.1 and 90bis.3).

Within **19 months** from the priority date, but only in respect of some designated Offices, a demand for international preliminary examination must be filed if the applicant wishes to postpone the entry into the national phase **until 30 months** from the priority date (in some Offices even later); otherwise, the applicant must, **within 20 months** from the priority date, perform the prescribed acts for entry into the national phase before those designated Offices. In respect of other designated Offices, the time limit of **30 months** (or later) will apply even if no demand is filed within 19months.

For details about the applicable time limits, Office by Office, see www.wipo.int/pct/en/texts/time_limits.html and the PCT Applicant's Guide, National Chapters.

Name and mailing address of the ISA/KR Korean Intellectual Property Office Government Complex-Daejeon, 139 Seonsa-ro, Seo-gu, Daejeon 302-701, Republic of Korea Facsimile No. 82-42-472-7140	Authorized officer COMMISSIONER Telephone No. 82-42-481-8752

* Attention

Copies of the documents cited in the international search report can be searched in the following Korean Intellectual Property Office English website for three months from the date of mailing of the international search report.

http://www.kipo.go.kr/en/ => Patent Search => PCT-Service

ID : PCT international application number
PW : **X6RO2V7A**

Inquiries related to PCT International Search Report or Written Opinion prepared by KIPO as an International Searching Authority can be answered not only by KIPO but also through IPKC (Intellectual Property Korea Center), located in Vienna, VA, which functions as a PCT Help Desk for PCT applicants.

Homepage: http://www.ipkcenter.com
Email: ipkc@ipkcenter.com
Phone: +1 703 388 1066
Fax: +1 703 388 1084

PATENT COOPERATION TREATY

PCT

INTERNATIONAL SEARCH REPORT

(PCT Article 18 and Rules 43 and 44)

Applicant's or agent's file reference	FOR FURTHER ACTION	see Form PCT/ISA/220 as well as, where applicable, item 5 below.
326727-02		
International application No.	International filing date *(day/month/year)*	(Earliest) Priority Date *(day/month/year)*
PCT/US2010/026706	09 MARCH 2010 (09.03.2010)	16 MARCH 2009 (16.03.2009)

Applicant

MICROSOFT CORPORATION

This International search report has been prepared by this International Searching Authority and is transmitted to the applicant according to Article 18. A copy is being transmitted to the International Bureau.

This international search report consists of a total of 3 sheets.

☐ It is also accompanied by a copy of each prior art document cited in this report.

1. **Basis of the report**
   a. With regard to the **language**, the international search was carried out on the basis of:
      ☒ the international application in the language in which it was filed
      ☐ a translation of the international application into _____, which is the language of a translation furnished for the purposes of international search (Rules 12.3(a) and 23.1(b))
   b. ☐ This international search report has been established taking into account the **rectification of an obvious mistake** authorized by or notified to this Authority under Rule 91 (Rule 43.6*bis*(a)).
   c. ☐ With regard to any **nucleotide and/or amino acid sequence** disclosed in the international application, see Box No. I.
2. ☐ **Certain claims were found unsearchable** (See Box No. II)
3. ☐ **Unity of invention is lacking** (See Box No. III)
4. With regard to the **title**,
   ☒ the text is approved as submitted by the applicant.
   ☐ the text has been established by this Authority to read as follows:

5. With regard to the **abstract**,
   ☒ the text is approved as submitted by the applicant.
   ☐ the text has been established, according to Rule 38.2, by this Authority as it appears in Box No. IV. The applicant may, within one month from the date of mailing of this international search report, submit comments to this Authority.
6. With regard to the **drawings**,
   a. the figure of the **drawings** to be published with the abstract is Figure No. 1
      ☒ as suggested by the applicant.
      ☐ as selected by this Authority, because the applicant failed to suggest a figure.
      ☐ as selected by this Authority, because this figure better characterizes the invention.
   b. ☐ none of the figure is to be published with the abstract.

INTERNATIONAL SEARCH REPORT

International application No.
PCT/US2010/026706

A. CLASSIFICATION OF SUBJECT MATTER

G06F 3/048(2006.01)i, G06F 3/14(2006.01)i

According to International Patent Classification (IPC) or to both national classification and IPC

B. FIELDS SEARCHED

Minimum documentation searched (classification system followed by classification symbols)

G06F 3/048; G06F 17/00; G06T 15/70; G09G 5/00

Documentation searched other than minimum documentation to the extent that such documents are included in the fields searched

Korean utility models and applications for utility models
Japanese utility models and applications for utility models

Electronic data base consulted during the international search (name of data base and, where practicable, search terms used)

eKOMPASS(KIPO internal) & Keywords: "user interface, layout, animation, snapshot, incoming, outgoing, and similar terms"

C. DOCUMENTS CONSIDERED TO BE RELEVANT

Category*	Citation of document, with indication, where appropriate, of the relevant passages	Relevant to claim No.
A	US 2008-0120534 A1 (MOORE KEVIN R.) 22 May 2008 See Summary of the invention; Figures 1,3-6; Paragraphs [0022]-[0024]	1-15
A	US 2005-0046630 A1 (KURT JACOB et al.) 03 March 2005 See Summary of the invention; Figures 5a-5b,8; Paragraphs [0021]-[0024], [0040]-[0046]	1-15
A	US 2007-0013690 A1 (ELIZABETH K. NELSON et al.) 18 January 2007 See Summary of the invention; Figures 3,7-10; Paragraphs [0079]-[0092]	1-15
A	US 2003-0132959 A1 (J. BRET SIMISTER et al.) 17 July 2003 See Summary of the invention; Figures 2A-3; Paragraphs [0039]-[0048]	1-15

☐ Further documents are listed in the continuation of Box C. ☒ See patent family annex.

* Special categories of cited documents
"A" document defining the general state of the art which is not considered to be of particular relevance
"E" earlier application or patent but published on or after the international filing date
"L" document which may throw doubts on priority claim(s) or which is cited to establish the publication date of citation or other special reason (as specified)
"O" document referring to an oral disclosure, use, exhibition or other means
"P" document published prior to the international filing date but later than the priority date claimed
"T" later document published after the international filing date or priority date and not in conflict with the application but cited to understand the principle or theory underlying the invention
"X" document of particular relevance; the claimed invention cannot be considered novel or cannot be considered to involve an inventive step when the document is taken alone
"Y" document of particular relevance; the claimed invention cannot be considered to involve an inventive step when the document is combined with one or more other such documents,such combination being obvious to a person skilled in the art
"&" document member of the same patent family

Date of the actual completion of the international search	Date of mailing of the international search report
27 SEPTEMBER 2010 (27.09.2010)	**28 SEPTEMBER 2010 (28.09.2010)**

Name and mailing address of the ISA/KR
Korean Intellectual Property Office
Government Complex-Daejeon, 139 Seonsa-ro, Seo-gu, Daejeon 302-701, Republic of Korea
Facsimile No. 82-42-472-7140

Authorized officer
JEONG, Jae Woo
Telephone No. 82-42-481-5718

INTERNATIONAL SEARCH REPORT

Information on patent family members

International application No.
PCT/US2010/026706

Patent document cited in search report	Publication date	Patent family member(s)	Publication date
US 2008-0120534 A1	22.05.2008	None	
US 2005-0046630 A1	03.03.2005	None	
US 2007-0013699 A1	18.01.2007	CN 101223555 A	16.07.2008
		CN 101223555 A0	16.07.2008
		EP 1908020 A2	09.04.2008
		JP 2009-501388 A	15.01.2009
		KR 10-2008-0026597 A	25.03.2008
		MX 2008000515 A	06.03.2008
		RU 2008101466 A	20.07.2009
		US 2007-013699 A1	18.01.2007
		US 7477254 B2	13.01.2009
		WO 2007-008853 A2	18.01.2007
		WO 2007-008853 A3	11.10.2007
US 2003-0132959 A1	17.07.2003	AU 2003-202959 A1	02.09.2003
		US 2006-0026526 A1	02.02.2006
		US 6957392 B2	18.10.2005
		WO 03-063004 A1	31.07.2003

PATENT COOPERATION TREATY

From the
INTERNATIONAL SEARCHING AUTHORITY

To:
MICROSOFT CORPORATION

Attn - Virginia Coggan (vcoggan) LCA - International Patents
One Microsoft Way - 8/1188 Redmond Washington 98052-6399 USA

PCT

WRITTEN OPINION OF THE INTERNATIONAL SEARCHING AUTHORITY

(PCT Rule 43bis.1)

Date of mailing *(day/month/year)*	**28 SEPTEMBER 2010 (28.09.2010)**
Applicant's or agent's file reference 326727-02	**FOR FURTHER ACTION** See paragraph 2 below

International application No	International filing date *(day/month/year)*	Priority date *(day/month/year)*
PCT/US2010/026706	**09 MARCH 2010 (09.03.2010)**	16 MARCH 2009 (16.03.2009)

International Patent Classification (IPC) or both national classification and IPC

G06F 3/048(2006.01)i, G06F 3/14(2006.01)i

Applicant

MICROSOFT CORPORATION

1. This opinion contains indications relating to the following items:

- [x] Box No. I Basis of the opinion
- [ ] Box No. II Priority
- [ ] Box No. III Non-establishment of opinion with regard to novelty, inventive step and industrial applicability
- [ ] Box No. IV Lack of unity of invention
- [x] Box No. V Reasoned statement under Rule 43bis.1(a)(i) with regard to novelty, inventive step or industrial applicability; citations and explanations supporting such statement
- [ ] Box No. VI Certain documents cited
- [ ] Box No. VII Certain defects in the international application
- [ ] Box No. VIII Certain observations on the international application

2. **FURTHER ACTION**

If a demand for international preliminary examination is made, this opinion will be considered to be a written opinion of the International Preliminary Examining Authority ("IPEA") except that this does not apply where the applicant chooses an Authority other than this one to be the IPEA and the chosen IPEA has notified the International Bureau under Rule 66.1bis(b) that written opinions of this International Searching Authority will not be so considered.

If this opinion is, as provided above, considered to be a written opinion of the IPEA, the applicant is invited to submit to the IPEA a written reply together, where appropriate, with amendments, before the expiration of 3 months from the date of mailing of Form PCT/ISA/220 or before the expiration of 22 months from the priority date, whichever expires later.
For further options, see Form PCT/ISA/220.

3. For further details, see notes to Form PCT/ISA/220.

Name and mailing address of the ISA/KR	Date of completion of this opinion	Authorized officer
Korean Intellectual Property Office Government Complex-Daejeon, 139 Seonsa-ro, Seo-gu, Daejeon 302-701, Republic of Korea Facsimile No. 82-42-472-7140	27 SEPTEMBER 2010 (27.09.2010)	JEONG, Jae Woo Telephone No.82-42-481-5718

WRITTEN OPINION OF THE
INTERNATIONAL SEARCHING AUTHORITY

International application No.
PCT/US2010/026706

Box No. I Basis of this opinion

1. With regard to the **language**, this opinion has been established on the basis of :

   ☒ the international application in the language in which it was filed

   ☐ a translation of the international application into _____, which is the language of a translation furnished for the purposes of international search (Rules 12.3(a) and 23.1(b))

2. ☐ This opinion has been established taking into account the **rectification of an obvious mistake** authorized by or notified to this Authority under Rule 91 (Rule 43*bis*.1(a))

3. With regard to any **nucleotide and/or amino acid sequence** disclosed in the international application, this opinion has been established on the basis of:

   a. a sequence listing filed or furnished
      ☐ on paper
      ☐ in electronic form

   b. time of filing or furnishing
      ☐ contained in the international application as filed.
      ☐ filed together with the international application in electronic form.
      ☐ furnished subsequently to this Authority for the purposes of search.

4. ☐ In addition, in the case that more than one version or copy of a sequence listing has been filed or furnished, the required statements that the information in the subsequent or additioanl copies is identical to that in the application as filed or does not go beyond the application as filed, as appropriate, were furnished.

5. Additional comments:

WRITTEN OPINION OF THE
INTERNATIONAL SEARCHING AUTHORITY

International application No.
PCT/US2010/026706

Box No. V Reasoned statement under Rule 43bis.1(a)(i) with regard to novelty, inventive step or industrial applicability; citations and explanations supporting such statement

1. Statement

Novelty (N)	Claims	1-15	YES
	Claims	NONE	NO
Inventive step (IS)	Claims	1-15	YES
	Claims	NONE	NO
Industrial applicability (IA)	Claims	1-15	YES
	Claims	NONE	NO

2. Citations and explanations :

Reference is made to the following documents:

D1: US 2008-0120534 A1 (MOORE KEVIN R.) 22 May 2008

D1 discloses a computer storage medium having computer-executable instructions to perform the steps of receiving a request to reconfigure a set of elements into a new configuration, each element of the set having first layout data corresponding to an initial laid out state; determining second layout data for each element in the set of elements in the new configuration corresponding to a final laid out state; and transitioning some of the elements from their initial laid out state to their final laid out state, including determining interim layout data corresponding to each frame of a series of frames such that the interim layout data provides an animation effect.

1. Novelty and Inventive Step

Claim 1

Claim 1 of the present invention relates to a computer-implemented method for smoothly animating the transition of a user interface (UI) element from an outgoing state to an incoming state, which comprises taking an outgoing snapshot of the position and other visible properties of a UI element in the outgoing state, informing the UI element that the layout has changed to the new state, taking an incoming snapshot of the position and other visible properties of the UI element in the incoming state, comparing the outgoing snapshot and the incoming snapshot to determine whether the UI element moved or changed appearance, and animating the transition of the UI element by gradually modifying the values of appearance properties that simulate a change between the outgoing and incoming state to make the change of appearance of the UI element appear smooth to a user.

Claim 1 of the present invention and document D1 that is the closest prior art to the present invention, relate to the same subject matter of the layout transition in a animation system. However, D1 does not disclose comparing the outgoing snapshot and the incoming snapshot to determine whether the UI element moved or changed appearance, which is the key technical feature of claim 1. Therefore, the invention of claim 1 is considered to be novel under PCT Article 33(2).

(Continued on Supplemental Box)

Supplemental Box

In case the space in any of the preceding boxes is not sufficient.
Continuation of :

Box No. V

Moreover, the technical feature of claim 1, comparing the outgoing snapshot and the incoming snapshot and animating the transition of the UI element by gradually modifying the values of appearance properties that simulate a change between the outgoing and incoming state, is not obvious to a person skilled in the art and is not suggested in any of the prior arts. Therefore, the invention of claim 1 is considered to fulfill the requirement of inventive step under PCT Article 33(3).

Claim 12

Claim 12 of the present invention relates a computer system for smoothly animating the user interface transitions between states, which adopts the same subject matter as the invention of claim 1. Therefore, the invention of claim 12 is also considered to fulfill the requirements of novelty and inventive step under PCT Article 33(2),(3).

Claims 2-11 and 13-15

Claims 2-11 and 13-15, which are dependent on claims 1 and 12, respectively, are also considered to fulfill the requirements of novelty and inventive step under PCT Article 33(2), (3).

2. Industrial Applicability

The present invention is industrially applicable under PCT Article 33(4).

CLAIMS

I/We claim:

1. A computer-implemented method for smoothly animating the transition of a user interface (UI) element from an outgoing state to an incoming state, the method comprising:

taking 410 an outgoing snapshot of the position and other visible properties of a UI element in the outgoing state arranged by a layout manager;

informing 430 the UI element that the layout has changed to the new state so that the UI element updates its positional and layout properties but does not render a transition;

taking 440 an incoming snapshot of the position and other visible properties of the UI element in the incoming state;

comparing 450 the outgoing snapshot and the incoming snapshot to determine whether the UI element moved or changed appearance; and

upon determining 460 that the appearance or position of the UI element changed, animating 480 the transition of the UI element by gradually modifying the values of appearance properties that simulate a change between the outgoing and incoming state to make the change of appearance of the UI element appear smooth to a user,

wherein the preceding steps are performed by at least one processor.

2. The method of claim 1 further comprising performing the method for multiple UI elements in parallel.

3. The method of claim 1 wherein taking a snapshot further comprises storing the UI element's effective opacity where effective opacity is visibility times opacity.

4. The method of claim 1 further comprising stopping any previously in progress transition.

5. The method of claim 1 wherein taking a snapshot of the outgoing state comprises taking a snapshot of the UI element in a current position of a previously in progress transition and animating the transition from the UI element's current size and position to the UI element's new ending size and position based on the incoming state.

6. The method of claim 1 wherein comparing further comprises using a comparison result to create a series of intermediate positions and appearances for

the UI element to provide a smooth animation transition from the outgoing state to the incoming state.

7. The method of claim 1 wherein animating the transition comprises determining a number of intermediate appearances based on a specified duration for the transition between states.

8. The method of claim 1 wherein animating the transition comprises determining a property type that changed, and for a color property type animating the red, green, and blue values gradually between a start color and an end color.

9. The method of claim 1 wherein animating the transition comprises determining a property type that changed, and for a layout property change that modifies the UI element's position, gradually modifying the coordinates of the UI element to produce smooth movement.

10. The method of claim 1 wherein animating the transition comprises determining a property type that changed, and for a visibility property, gradually modifying an opacity property to create an appearance of smoothly changing visibility.

11. The method of claim 1 further comprising before animating the transition wrapping the UI element in a temporary container that isolates the movement of the UI element during animation from other UI elements, and after animating the transition removing the temporary container from the UI element so that the UI element is placed back into its normal position in the layout hierarchy and so that any modifications to it will once again affect surrounding elements.

12. A computer system for smoothly animating user interface (UI) transitions between states, the system comprising:

a processor and memory configured to execute software instructions;

a state management component 110 configured to store multiple states in which a UI can exist and receive an indication to transition from one state to another;

a determine state delta component 120 configured to compare an ingoing and outgoing state to determine layout properties that change between the states, and corresponding UI elements that will change;

a state snapshot component 130 configured to take a snapshot of an area within which each corresponding UI element of a layout is positioned;

a snapshot comparison component 140 configured to compare snapshots of an incoming state and an outgoing state to determine what UI elements change and identify property values for appearance properties at each state; and

an element animation component 150 configured to animate each element smoothly between the outgoing state and incoming state by displaying one or more intermediate appearances for each element.

13. The system of claim 12 wherein the state management component is further configured to store states in a declarative format that can be edited by a designer without programming experience, wherein the declarative format also contains transition information that includes at least conditions that cause a transition and a duration of the transition.

14. The system of claim 12 wherein at least one property of the layout properties compared by the determine state delta component is selected from the group consisting of a column of a grid layout, a row of a grid layout, a row span of a grid layout, a column span of a grid layout, a top property of a canvas, a left property of a canvas, a visibility property, an orientation of a stack, a docking direction in a dock layout, an expanded property of an expander layout, an orientation of a wrap panel layout, an item width of a wrap panel layout, an item height of a wrap panel layout, a width property, a height property, a minimum width property, a minimum height property, a maximum width property, a maximum height property, a margin property, a padding property, a horizontal alignment property, and a vertical alignment property.

15. The system of claim 12 wherein the snapshot comparison component is further configured to determine a value of each property that changed between the incoming state and the outgoing state, and to determine an appropriate property for the element animation component to modify to simulate the transition of the property that changed.

UNITED STATES PATENT AND TRADEMARK OFFICE

UNITED STATES DEPARTMENT OF COMMERCE
United States Patent and Trademark Office
Address: COMMISSIONER FOR PATENTS
P.O. Box 1450
Alexandria, Virginia 22313-1450
www.uspto.gov

APPLICATION NO.	FILING DATE	FIRST NAMED INVENTOR	ATTORNEY DOCKET NO.	CONFIRMATION NO.
12/405,213	03/16/2009	Kenneth L. Young	326727.01	3162

69316 7590 06/13/2011

MICROSOFT CORPORATION
ONE MICROSOFT WAY
REDMOND, WA 98052

EXAMINER	
PACK, CONRAD	
ART UNIT	**PAPER NUMBER**
2174	

NOTIFICATION DATE	DELIVERY MODE
06/13/2011	ELECTRONIC

Please find below and/or attached an Office communication concerning this application or proceeding.

The time period for reply, if any, is set in the attached communication.

Notice of the Office communication was sent electronically on above-indicated "Notification Date" to the following e-mail address(es):

vffiling@microsoft.com
stevensp@microsoft.com
ntovar@MICROSOFT.COM

UNITED STATES PATENT AND TRADEMARK OFFICE

Commissioner for Patents
United States Patent and Trademark Office
P.O. Box 1450
Alexandria, VA 22313-1450
www.uspto.gov

MICROSOFT CORPORATION
ONE MICROSOFT WAY
REDMOND WA 98052

In re Application of: YOUNG et al.
Application No. 12/405,213
Attorney Docket #: 325704.01
Filed: February 11, 2009
For: DISPLAYING MULTIPLE ROW AND COLUMN HEADER AREAS IN A SUMMARY TABLE

DECISION ON REQUEST TO PARTICIPATE IN PATENT PROSECUTION HIGHWAY PROGRAM AND PETITION TO MAKE SPECIAL UNDER 37 CFR 1.102(a)

This is a decision on the request to participate in the Patent Prosecution Highway (PPH) program and the petition under 37 CFR 1.102(a), filed April 29, 2011 to make the above-identified application special.

The petition is **DISMISSED.**

A grantable request to participate in the PPH program and petition to make special require:

(1) The U.S. application is
(a) a Paris Convention application which either
(i) validly claims priority under 35 U.S.C. 119(a) and 37 CFR 1.55 to one or more applications filed in the JPO, or
(ii) validly claims priority to a PCT application that contains no priority claims,

Or

(b) a national stage application under the PCT (an application which entered the national stage in the U.S. from a PCT international application after compliance with 35 U.S.C. 371), which PCT application
(i) validly claims priority to an application filed in the JPO, or
(ii) validly claims priority to a PCT application that contains no priority claims, or
(iii) contains no priority claim,

Or

(c) a so-called bypass application filed under 35 U.S.C. 111 (a) which validly claims benefit under 35 U.S.C. 120 to a PCT application, which PCT application
(i) validly claims priority to an application filed in the JPO, or
(ii) validly claims priority to a PCT application that contains no priority claims, or
(iii) contains no priority claim.

Where the JPO application that contains the allowable/patentable claims is not the same application for which priority is claimed in the U.S. application, applicant must identify the relationship between the JPO application that contains the allowable/patentable claims and the JPO priority application claimed in the U.S. application.

(2) Applicant must submit a copy of:
a. The allowable/patentable claim(s) from the JPO application(s) or if a copy of the allowable/patentable claims is available via the Dossier Access System (DAS) applicant may request the USPTO obtain a copy from the DAS, however if the USPTO is unable to obtain a copy from the DAS the applicant will be required to submit a copy;
b. An English translation of the allowable/patentable claim(s) and
c. A statement that the English translation is accurate;

Effective January 29, 2010, for a period of two years ending on January 28, 2012, the USPTO will accept claims written in dependent form in the U.S. application which are narrower in scope than the allowable/patentable claims in the Japanese application.

(3) Applicant must:
a. Ensure all the claims in the U.S. application must sufficiently correspond or be amended to sufficiently correspond to the allowable/patentable claim(s) in the JPO application(s) and
b. Submit a claims correspondence table in English;

(4) Examination of the U.S. application has not begun;

(5) Applicant must submit:
a. Documentation of prior office action:
i. a copy of the office action(s)just prior to the "Decision to Grant a Patent" from each of the JPO application(s) containing the allowable/patentable claim(s) or
ii. if the allowable/patentable claims(s) are from a "Notification of Reasons for Refusal" then the Notification of Reasons for Refusal or
iii. if the JPO application is a first action allowance then no office action from the JPO is necessary should be indicated on the request/petition form;

Further, if a copy of the documents from a above is available via the Dossier Access System (DAS) applicant may request the USPTO obtain a copy from the DAS, however if the USPTO is unable to obtain a copy from the DAS the applicant will be required to submit a copy;

b. An English language translation of the JPO Office action from (5)(a)(i)-(ii) above

c. A statement that the English translation is accurate;

Effective January 29, 2010, Applicants may submit a machine translation into the English language of the copy of the latest JPO office action just prior to the

"Decision to Grant a Patent" (e.g., the latest "Notification of Reasons for Refusal") from each of the JPO application(s) containing the allowable/patentable claims that are the basis for the PPH request. The machine translation into the English language must be one that is provided by the JPO. That is, the machine translation into the English language cannot be one that is provided by a commercial service. Where a machine translation into the English language of the copy of the latest JPO office action (obtained from the JPO) is submitted, it will not be necessary to include a statement that the English translation is accurate.

(6) Applicant must submit:
   a. An IDS listing the documents cited by the JPO examiner in the JPO office action (unless already submitted in this application)
   b. Copies of the documents except U.S. patents or U.S. patent application publications (unless already submitted in this application);

The request to participate in the PPH pilot program and petition fails to meet item 4 of the requirements listed above. An action on the merits was mailed in this application on May 27, 2011.

The Petition is **DISMISSED**.

Applicant is given a time period of ONE MONTH or THIRTY DAYS, whichever is longer, to correct the deficiencies. NO EXTENSION OF TIME UNDER 37 CFR 1.136 IS PERMITTED.

If the deficiencies are not corrected with the time period given, the application will await action in its regular turn.

Response must submitted by EFS-Web using the document description "Petition to make special under Pat Pros Hwy".

Telephone inquiries concerning this decision should be directed to Mano Padmanabhan at 571-272-4210.

All other inquiries concerning the examination or status of the application should be directed to Patent Application Information Retrieval (PAIR) system.

/Mano Padmanabhan/

_____

Mano Padmanabhan
Quality Assurance Specialist, Technology Center 2100, Workgroup 2180
571-272-4210

The application is being forwarded to the examiner for action on the merits commensurate with this decision.

/Mano Padmanabhan/

Mano Padmanabhan
Quality Assurance Specialist, Technology Center 2100, Workgroup 2180
571-272-4210

UNITED STATES PATENT AND TRADEMARK OFFICE

UNITED STATES DEPARTMENT OF COMMERCE
United States Patent and Trademark Office
Address: COMMISSIONER FOR PATENTS
P.O. Box 1450
Alexandria, Virginia 22313-1450
www.uspto.gov

APPLICATION NO.	FILING DATE	FIRST NAMED INVENTOR	ATTORNEY DOCKET NO.	CONFIRMATION NO.
12/405,288	03/17/2009	Victor F. Rundquist	60309.0020USU1/SW-10-0575	3311

70289 7590 10/25/2011

MERCHANT & GOULD KS
P.O. BOX 2903
MINNEAPOLIS, MN 55402

EXAMINER	
KASENGE, CHARLES R	
ART UNIT	PAPER NUMBER
2121	
MAIL DATE	DELIVERY MODE
10/25/2011	PAPER

Please find below and/or attached an Office communication concerning this application or proceeding.

The time period for reply, if any, is set in the attached communication.

UNITED STATES PATENT AND TRADEMARK OFFICE

Commissioner for Patents
United States Patent and Trademark Office
P.O. Box 1450
Alexandria, VA 22313-1450
www.uspto.gov

MERCHANT & GOULD KS
P.O. BOX 2903
MINNEAPOLIS MN 55402

Applicant: Rundquist et al.
Appl. No.: 12/405,288
Filing Date: March 17, 2009
Title: POROSITY DETECTION
Attorney Docket No.: 60309.0020USU1/SW-10-0575
Pub. No.: US 2009/0229779 A1
Pub. Date: September 17, 2009

This is a decision on the request for republication of patent application publication under 37 CFR 1.221(a), filed on September 23, 2011, for the above-identified application.

The request under 37 CFR 1.221(a) is DISMISSED.

37 CFR 1.221(a) requires "a copy of the application in compliance with the Office electronic filing system requirements and be accompanied by the publication fee set forth in § 1.18(d) and the processing fee set forth in § 1.17(i)". If the request for republication does not comply with the electronic filing system requirements, the republication will not take place and the publication fee set forth in § 1.18(d) will be refunded. The processing fee will be retained.

The applicant did not supply a copy of the application in compliance with the Office electronic filing system, as required by 37 CFR 1.221(a) because **the applicant submitted the papers as a "Document for an existing application", which are entered into the application file, and not as a "Pre-Grant Publication" submission**. The request for republication does not comply with the electronic filing system requirements, thus republication will not take place.

Any request for republication under 37 CFR 1.221(a), must be submitted via the EFS system, as a Pre-Grant publication submission and must include a copy of the application in compliance with the Office electronic filing system requirements. The applicant is directed to the following website for additional instructions on how to submit a Pre-Grant Publication submission via the electronic filing system:

http://www.uspto.gov/ebc/portal/efs/pgpub_quickstart.pdf

Any questions or requests for reconsideration of the decision should be addressed as follows:

By mail to: Mail Stop PGPUB
Commissioner for Patents
P.O. Box 1450
Alexandria, Va. 22313-1450

By facsimile: 571-273-8300

Telephone inquiries regarding this correspondence should be directed to The Office of Data Management at 571-272-4200.

Tammy J. Koontz
Office of Data Management
United States Patent & Trademark Office

Adj[redacted]
097[redacted]
01 FC[redacted]OP

Adjustment date: 10/25/2011 KKING1
09/23/2011 INTEFSW 00021398 12405288
01 FC:1504 -300.00 OP

Refund Ref:
10/25/2011 0030103701

Credit Card Refund Total: $300.00

VISA....: XXXXXXXXXXX0290

Doc Code: PET.GREEN
Document Description: Petition for Green Tech Pilot

PTO/SB/420 (11-10)
Approved for use through 01/31/2011. OMB 0651-0062
U.S. Patent and Trademark Office; U. S. DEPARTMENT OF COMMERCE
Under the Paperwork Reduction Act of 1995, no persons are required to respond to a collection of information unless it displays a valid OMB control number.

PETITION TO MAKE SPECIAL UNDER THE GREEN TECHNOLOGY PILOT PROGRAM

Attorney Docket Number: 81181339	Application Number (if known): 12/405,294	Filing date: 03/17/2009
First Named Inventor: Proietty		
Title: CO2 INFORMATION DISPLAY AND METHOD		

APPLICANT HEREBY REQUESTS TO PARTICIPATE IN THE GREEN TECHNOLOGY PILOT PROGRAM FOR THE ABOVE-IDENTIFIED APPLICATION. See Instruction Sheet on page 2.

This petition must be timely filed electronically using the USPTO electronic filing system, EFS-Web.

1. By filing this petition:

   Applicant is requesting early publication: Applicant hereby requests early publication under 37 CFR 1.219 and the publication fee set forth in 37 CFR 1.18(d) accompanies this request.

2. By filing this petition: applicant is agreeing to make an election without traverse in a telephonic interview and elect an invention that meets the eligibility requirements for the Green Technology Pilot Program, if the Office determines that the claims are not obviously directed to a single invention. See Instruction Sheet.

3. This request is accompanied by statements of special status for the eligibility requirement.

4. The application contains no more than three (3) independent claims and twenty (20) total claims.

5. The application does not contain any multiple dependent claims.

6. Other attachments: _____

Signature	Date 2-25-2011
Name (Print/Typed) Richard M. Sharkansky	Registration Number 25800

Note: *Signatures of all the inventors or assignees of record of the entire interest or their representative(s) are required in accordance with 37 CFR 1.33 and 11.18. Please see 37 CFR 1.4(d) for the form of the signature. If necessary, submit multiple forms for more than one signature see below*.*

*Total of forms are submitted.

The information is required to obtain or retain a benefit by the public which is to file (and by the USPTO to process) an application. Confidentiality is governed by 35 U.S.C. 122 and 37 CFR 1.11 and 1.14. This collection is estimated to take 12 hours to complete, including gathering, preparing, and submitting the completed application form to the USPTO. Time will vary depending upon the individual case. Any comments on the amount of time you require to complete this form and/or suggestions for reducing this burden, should be sent to the Chief Information Officer, U.S. Patent and Trademark Office, U.S. Department of Commerce, P.O. Box 1450, Alexandria, VA 22313-1450. DO NOT SEND FEES OR COMPLETED FORMS TO THIS ADDRESS. **SEND TO: Commissioner for Patents, P.O. Box 1450, Alexandria, VA 22313-1450.**

If you need assistance in completing the form, call 1-800-PTO-9199 and select option 2.

PATENT

IN THE UNITED STATES PATENT AND TRADEMARK OFFICE

Appl. No.	:	12/405,294	Confirmation No.: 3323
Applicant	:	Proietty et al.	
Filed	:	March 17, 2009	
T.C./A.U.	:		
Examiner	:		
Docket No.	:	81181339	
Customer No.	:	33036	

Commissioner for Patents
P.O. Box 1450
Alexandria, VA 22313-1450

STATEMENTS OF SPECIAL STATUS

Applicants respectfully request consideration of the following statement concerning the basis for the special status as well as the following statement pertaining to the materiality standard.

I. Statement concerning the basis for special status.

Applicants submit that special status is sought on the following bases: the claimed invention materially contributes to greenhouse gas emission reduction; and/or (3) the claimed invention materially enhances the quality of the environment.

II. Statement pertaining to the materiality standard.

Due to global warming and the concern for how human activity contributes to higher carbon dioxide (CO2) concentration in the atmosphere exacerbating global warming, some drivers are interested in determining their personal impact on CO2 entering the atmosphere. Combustion of carbon-based fuels in coal-fired power plants, airplanes, automotive vehicles, etc. produces CO2 which in the aggregate, at present, overbalances the ability of plant life to react CO2 into oxygen (O2). Environmentally-minded people are interested in obtaining a measure of how much CO2 they are responsible for in all aspects of their life including driving a vehicle powered by carbon-based fuels. Some individuals purchase carbon offsets

when they book an airline journey. The airline provides an estimate of the prorated mass of CO2 per passenger exhausted by the plane for the anticipated journey. The individual can pay a surcharge for a CO2 offset (commonly called carbon offset) in an amount equal to the amount of CO2 added to the atmosphere due to their flight. The surcharge is used to finance an activity which reduces CO2, such as providing a biomass-powered generator or wind-powered generator to replace a diesel-fueled generator in a remote village.

Environmentally-conscious individuals wishing to purchase carbon offsets in the amount of their automotive CO2 emissions would like to determine the amount of CO2 that their automobile is emitting. A method is disclosed for estimating CO2 produced by an internal combustion engine disposed in a vehicle and transmitting the estimated CO2 produced to a display device within the vehicle. The estimated CO2 produced can also be communicated to an electronic device not permanently coupled to the vehicle.

There are many ways that the estimated CO2 produced may be presented to the vehicle operator. Some operators desire a measure of the amount of CO2 produced in a cumulative fashion allowing them to purchase carbon offsets as they see fit. Thus, in one embodiment of the invention, the display is provided an operator reset button, which the operator resets, possibly when passing a milestone, such as 10 tons of CO2. The operator can then purchase 10 tons of carbon offset. In such embodiment, the display of estimated CO2 produced is an accumulated mass of CO2 produced in units of mass, which sums up the amount of CO2 since a last reset of an operator reset button.

In an alternative embodiment, the display is automatically reset upon a key on operation. In this embodiment, the operator obtains a measure of mass of CO2 produced since the beginning of a particular trip. This is useful in a vehicle which is used for predictable trips, e.g., an individual traveling to and from work on the same route daily or a fleet operator managing vehicles on predictable delivery trips. The datum provided in such an embodiment provides a measure of how other factors, such as: weather, load, or driving style, affect the estimated CO2 produced over the same trip. In this embodiment, the estimated CO2 produced is trip CO2 produced, in units of mass.

In another embodiment, estimated CO2 produced is an average CO2

produced, displayed in units of mass of CO2 per distance traveled. Average CO2 produced is computed as a mass of CO2 produced since a last reset divided by a distance traveled since the last reset. The reset, in one embodiment, is operator controlled by depressing an operator reset button; and in another embodiment, it is a key on operation.

In yet another embodiment, estimated CO2 produced is an instantaneous CO2 produced, displayed in units of mass of CO2 per distance traveled. Instantaneous CO2 produced is computed as a mass of CO2 produced during an interval divided by a distance traveled over the interval. In one embodiment, the interval is a short period of time, e.g., 1-60 seconds. Although it is called instantaneous CO2 produced, it is averaged over a short interval. Without a short period for averaging, the displayed value for instantaneous CO2 production would swing wildly, thereby providing meaningless output to the operator. Instantaneous CO2 produced can be computed as a rolling average, a weighted rolling average or any other known averaging technique. The instantaneous CO2 produced provides a measure of the effect that the current driving conditions have on CO2 production, with the display update regularly, with a frequency related to the time interval. Alternatively, the interval is a distance.

The estimated CO2 produced is based on an amount of fuel consumed and composition of the fuel used in the vehicle. For a vehicle having fuel injectors, fuel consumption is determined based on: the fuel pulse widths commanded to the fuel injectors and a pressure drop across the fuel injectors. By knowing the model of the injector installed into the engine, the fuel consumption is further based on flow characteristics and cross-sectional area of the injector's nozzle. Typically, all injectors of a particular batch are similar enough from injector to injector that an average value of flow coefficients and cross-sectional area are used to describe all injectors. For greater accuracy, each injector can be tested and fuel consumption is computed based on the values for that injector along with the fuel pulse width and pressure drop for each injector. The engine's fuel consumption is determined by summing up the fuel injected by each injector.

For an engine which may be supplied alcohol fuels, a quantity of alcohol in the fuel supplied to the engine may be estimated based on at least one of a signal from a fuel

sensor disposed in a fuel system supplying fuel to the engine and an exhaust gas oxygen sensor disposed in an exhaust system of the engine. Estimated CO2 produced may be adjusted based on alcohol content of the fuel. Similarly, accommodations can be made for any other fuel or fuel mixture.

Embodiments of the invention also include a system for determining estimated CO2 produced by a fuel oxidizing device. A fuel storage device supplies fuel to the fuel oxidizing device, the fuel delivery being measured by a metering device. An electronic control unit is coupled to the metering device. Estimated CO2 produced is based on the amount of fuel delivered and, in some embodiments, also based on fuel composition.

The system and method can be applied to any fuel oxidizing device. A non-exhaustive list of alternatives for fuel oxidizing device includes: jet engines, internal combustion engines, power plants, and fuel cells. Any power plant or combustion device which oxidizes a carbon-containing fuel is contemplated by the inventors of the present invention as being the fuel oxidizing device.

Also disclosed is a method for estimating CO2 produced by a fuel oxidizing device, including determining an amount of fuel supplied to the fuel oxidizing device, estimating the CO2 produced based on the amount of fuel supplied to the fuel oxidizing device over a period of time and fuel composition, transmitting the CO2 produced to a display device, which in one embodiment is disposed in a vehicle. In one embodiment, fuel composition is estimated based on a signal from a fuel sensor disposed in a fuel supply of the fuel oxidizing device.

As pointed out in claim 1, a method for displaying CO2 information, comprises:

determining an estimated CO2 produced over an interval by an internal combustion engine disposed in a vehicle based on at least an amount of fuel consumed by the vehicle during the interval; and

displaying the estimated CO2 produced on a display device within the vehicle.

As pointed out in claim 13, a system for computing CO2 produced by a fuel oxidizing device configured to oxidize fuel having a fuel composition, comprises:

a fuel storage device for storing fuel for the fuel oxidizing device;

a metering device configured to meter the fuel delivered to the fuel oxidizing device from the fuel storage device, and operable to output a signal related to the amount of fuel passing through the metering device;

a display device; and

an electronic control unit coupled to the metering device, the electronic control unit being configured to: estimate an amount of fuel delivered to the fuel oxidizing device based on the amount of fuel passing through the metering device, compute an estimated CO2 produced by the fuel oxidizing device based at least on part on the amount of fuel delivered and the fuel composition; and displaying the estimated CO2 produced on the display device.

As pointed out in claim 16, a method for estimating CO2 produced by a fuel oxidizing device, comprises:

determining an amount of fuel supplied to the fuel oxidizing device;

computing an estimated CO2 produced based on the amount of fuel supplied to the fuel oxidizing device over a defined period of time; and

displaying estimated CO2 produced on a display device.

Please charge any cost incurred in this filing, along with any other costs, to Deposit Account No. 06-1510. In the event any additional fee is required, please charge such amount to Patent and Trademark Office Deposit Account No. 06-1510.

Respectfully submitted,

February 25, 2011 /richard sharkansky/

Date

Richard M. Sharkansky
Attorney for Applicant(s)
Reg. No.: 25,800
114 Tide Run
Mashpee, MA 02649
Telephone: (508) 477-4311
Facsimile: (508) 477-7234

UNITED STATES PATENT AND TRADEMARK OFFICE

UNITED STATES DEPARTMENT OF COMMERCE
United States Patent and Trademark Office
Address: COMMISSIONER FOR PATENTS
P.O. Box 1450
Alexandria, Virginia 22313-1450
www.uspto.gov

APPLICATION NO.	FILING DATE	FIRST NAMED INVENTOR	ATTORNEY DOCKET NO.	CONFIRMATION NO.
12/405,294	03/17/2009	John Proietty	81181339	3323

33066 7590 03/04/2011

RICHARD M. SHARKANSKY
114 TIDE RUN
MASHPEE, MA 02649

EXAMINER	
WOLFE JR, WILLIS RAY	
ART UNIT	PAPER NUMBER
3747	
MAIL DATE	DELIVERY MODE
03/04/2011	PAPER

Please find below and/or attached an Office communication concerning this application or proceeding.

The time period for reply, if any, is set in the attached communication.

UNITED STATES PATENT AND TRADEMARK OFFICE

Commissioner for Patents
United States Patent and Trademark Office
P.O. Box 1450
Alexandria, VA 22313-1450
www.uspto.gov

RICHARD M. SHARKANSKY
114 TIDE RUN
MASHPEE MA 02649

In re Application of	:	
PROIETTY, JOHN et al	:	DECISION ON PETITION
Application No. 12/405,294	:	TO MAKE SPECIAL UNDER
Filed: March 17, 2009	:	THE GREEN TECHNOLOGY
Attorney Docket No. 81181339	:	PILOT PROGRAM

This is a decision on the petition under 37 CFR 1.102, filed Feb. 25, 2011, to make the above-identified application special under the pilot program for applications pertaining to Green Technologies as set forth in 74 Federal Register Notice 64666 (December 8, 2009) and amended by 75 Federal Register Notice 28554 (May 21, 2010) and 75 Federal Register Notice 69049 (November 10, 2010).

The petition is **DISMISSED**.

If reconsideration of this decision is desired, a petition for reconsideration must be filed within ONE (1) MONTH OR THIRTY (30) DAYS from the mail date of this decision, whichever is longer. No extension of this time limit can be granted under 37 CFR 1.136(a) or (b). The petition for reconsideration should include an exhaustive attempt to provide the lacking item(s) noted below, since, after a decision on the petition for reconsideration, no further reconsideration or review of the matter will be undertaken by the Director.

A grantable petition to make an application special under 37 CFR 1.102 and the pilot program as set forth in 74 FR 64666 must be directed to a nonprovisional application filed under 35 USC 111(a) or be a national stage entry under 35 USC 371, exclusive of any reissue applications.

In order to qualify for special status, the following requirements must be met. 1) The application must have no more than 3 independent claims and no more than 20 total claims. 2) The application must not contain any multiple dependent claims. 3) The petition must state the basis for seeking special status, i.e., the claimed invention either: A) materially enhances the quality of the environment or B) materially contributes to: i) the discovery or development of renewable energy resources, ii) the more efficient utilization and conservation of energy resources, or iii) greenhouse gas emission reduction. 4) If the disclosure is not clear on its face that the claimed

invention materially contributes under category (A) or (B), the petition must be accompanied by a statement by the applicant, assignee, or an attorney/agent registered to practice before the Office explaining how the materiality standard is met. 5) A statement that applicant will agree to make an election without traverse in a telephonic interview if a restriction requirement is made by the examiner. 6) The petition to make special must be filed electronically. 7) The petition must be filed at least one day prior to the date that a first Office Action appears in the Patent Application Information Retrieval (PAIR) system. 8) The petition must be accompanied by a request for early publication in compliance with 37 CFR 1.219 and include the publication fee as set forth in 37 CFR 1.18(d). The requirement for a fee for consideration of the petition to make special for applications pertaining to Green Technologies has been waived.

The petition lacks items #4 and # 8.

In regard to item 4, petitioner should note that the instant petition includes a statement identifying the basis for the special status (i.e., whether the instant invention (1) materially enhances the quality of the environment or materially contributes to (2) development of renewable energy resources or energy conservation, or (3) greenhouse gas reduction) as required by sections II and III of the notice. However, as stated in the notice, applicant must also provide a statement pertaining to the materiality standard if the application disclosure is not clear on its face as to the materiality of the basis for the special status of the invention. This petition lacks such a statement and it is not agreed that the application on its face meets that materiality standard. In the petition, petitioner states that the claims of the application are directed to enhance the quality of the environment and reduce greenhouse gas emission. This is not persuasive because it is not clear the claimed CO_2 gas computation and display will contribute to enhancement of the quality of the environment and reduction of greenhouse gas emission. The claimed display

In regard to item 8, petitioner should note that since no request in compliance with 37 CFR 1.219 has been made for the early publication of the present application and the publication fee $300.00 as set forth in 37 CFR 1.18(d) has not been received, the petition is dismissed.

Any reconsideration of this decision should be submitted through the USPTO electronic filing system, EFS-Web, and selecting the document description of "Petition for Green Tech Pilot" on the EFS-Web screen.

Telephone inquiries concerning this decision should be directed to Henry C. Yuen at 571-272-4856. This application will be forwarded to the Technology Center Art Unit 3747 for action in its regular turn.

/Henry C. Yuen/

Henry C. Yuen
Quality Assurance Specialist
Technology Center 3700

PATENT

IN THE UNITED STATES PATENT AND TRADEMARK OFFICE

Appl. No.	:	12/405,294	Confirmation No.: 3323
Applicant	:	Proietty et al.	
Filed	:	March 17, 2009	
T.C./A.U.	:		
Examiner	:		
Docket No.	:	81181339	
Customer No.	:	33036	

Commissioner for Patents
P.O. Box 1450
Alexandria, VA 22313-1450

REQUEST FOR RECONSIDERATION ON DISMISSAL OF PETITION FOR SPECIAL STATUS

Applicant respectfully request reconsideration of the dismissal of the petition for special status.

The petition was dismissed for the following reasons:

The petition lacks items #4 and # 8.

With regard to item #8, Applicant hereby requests, under 37 CFR 1.219, early publication of the present application and the hereby authorizes the amount of $300., or any additional fee required for this petition, to be charge Patent and Trademark Office Deposit Account No. 06-1510. In this regard the application has already been published. It is further noted that the original petition included it is to be noted that the request for early publication was included in a statement in the original petition (on the form accompanying the petition) and also included at the end of the written portion of the petition the following statesmen:

> Please charge any cost incurred in this filing, along with any other costs, to Deposit Account No. 06-1510. In the event any additional fee is required, please charge such amount to Patent and Trademark Office Deposit Account No. 06-1510.

With regard to item #4, due to global warming and the concern for how human activity contributes to higher ***carbon dioxide (CO2)*** (i.e., ***greenhouse gasses***) concentration in the atmosphere exacerbating ***global warming***, some drivers are interested in determining their personal impact on CO2 entering the atmosphere. Combustion of carbon-based fuels in

coal-fired power plants, airplanes, automotive vehicles, etc. produces CO2 which in the aggregate, at present, overbalances the ability of plant life to react CO2 into oxygen (O2). Environmentally-minded people are interested in obtaining a measure of how much CO2 they are responsible for in all aspects of their life including driving a vehicle powered by carbon-based fuels. ***Thus, by having a way to inform a person how much CO2 they are using they can reduce the emissions if there use is tending to be excessive.*** In short, if one has no idea as to how much CO2 he/she is using how can they select one driving route over another. Further, as described in the patent application some individuals may desire to purchase carbon offsets when they book an airline journey. The airline provides an estimate of the prorated mass of CO2 per passenger exhausted by the plane for the anticipated journey. The individual can pay a surcharge for a CO2 offset (commonly called carbon offset) in an amount equal to the amount of CO2 added to the atmosphere due to their flight. The surcharge is used to finance an activity which reduces CO2, such as providing a biomass-powered generator or wind-powered generator to replace a diesel-fueled generator in a remote village. Thus, the purchaser needs to have a way for estimating carbon usage. The invention provides a method for displaying CO2 information

Please charge any cost incurred in this filing, along with any other costs, to Deposit Account No. 06-1510. In the event any additional fee is required, please charge such amount to Patent and Trademark Office Deposit Account No. 06-1510.

Respectfully submitted,

March 18, 2011

Date

/richard sharkansky/

Richard M. Sharkansky
Attorney for Applicant(s)
Reg. No.: 25,800
114 Tide Run
Mashpee, MA 02649
Telephone: (508) 477-4311
Facsimile: (508) 477-7234

UNITED STATES PATENT AND TRADEMARK OFFICE

UNITED STATES DEPARTMENT OF COMMERCE
United States Patent and Trademark Office
Address: COMMISSIONER FOR PATENTS
P.O. Box 1450
Alexandria, Virginia 22313-1450
www.uspto.gov

APPLICATION NO.	FILING DATE	FIRST NAMED INVENTOR	ATTORNEY DOCKET NO.	CONFIRMATION NO.
12/405,294	03/17/2009	John Proietty	81181339	3323

33066 7590 03/30/2011
RICHARD M. SHARKANSKY
114 TIDE RUN
MASHPEE, MA 02649

EXAMINER
WOLFE JR, WILLIS RAY

ART UNIT	PAPER NUMBER
3747	

MAIL DATE	DELIVERY MODE
03/30/2011	PAPER

Please find below and/or attached an Office communication concerning this application or proceeding.

The time period for reply, if any, is set in the attached communication.

UNITED STATES PATENT AND TRADEMARK OFFICE

Commissioner for Patents
United States Patent and Trademark Office
P.O. Box 1450
Alexandria, VA 22313-1450
www.uspto.gov

RICHARD M. SHARKANSKY
114 TIDE RUN
MASHPEE MA 02649

In re Application of	:	
PROIETTY, JOHN et al	:	DECISION ON PETITION
Application No. 12/405,294	:	TO MAKE SPECIAL UNDER
Filed: March 17, 2009	:	THE GREEN TECHNOLOGY
Attorney Docket No. 81181339	:	PILOT PROGRAM

This is a decision on the petition under 37 CFR 1.102, filed March 18, 2011, to make the above-identified application special under the pilot program for applications pertaining to Green Technologies as set forth in 74 Federal Register Notice 64666 (December 8, 2009) and amended by 75 Federal Register Notice 28554 (May 21, 2010) and 75 Federal Register Notice 69049 (November 10, 2010).

The petition is granted.

If reconsideration of this decision is desired, a petition for reconsideration must be filed within ONE (1) MONTH OR THIRTY (30) DAYS from the mail date of this decision, whichever is longer. No extension of this time limit can be granted under 37 CFR 1.136(a) or (b). The petition for reconsideration should include an exhaustive attempt to provide the lacking item(s) noted below, since, after a decision on the petition for reconsideration, no further reconsideration or review of the matter will be undertaken by the Director.

A grantable petition to make an application special under 37 CFR 1.102 and the pilot program as set forth in 74 FR 64666 must be directed to a nonprovisional application filed under 35 USC 111(a) or be a national stage entry under 35 USC 371, exclusive of any reissue applications.

In order to qualify for special status, the following requirements must be met. 1) The application must have no more than 3 independent claims and no more than 20 total claims. 2) The application must not contain any multiple dependent claims. 3) The petition must state the basis for seeking special status, i.e., the claimed invention either: A) materially enhances the quality of the environment or B) materially contributes to: i) the discovery or development of renewable energy resources, ii) the more efficient utilization and conservation of energy resources, or iii) greenhouse gas emission reduction. 4) If the disclosure is not clear on its face that the claimed

invention materially contributes under category (A) or (B), the petition must be accompanied by a statement by the applicant, assignee, or an attorney/agent registered to practice before the Office explaining how the materiality standard is met. 5) A statement that applicant will agree to make an election without traverse in a telephonic interview if a restriction requirement is made by the examiner. 6) The petition to make special must be filed electronically. 7) The petition must be filed at least one day prior to the date that a first Office Action appears in the Patent Application Information Retrieval (PAIR) system. 8) The petition must be accompanied by a request for early publication in compliance with 37 CFR 1.219 and include the publication fee as set forth in 37 CFR 1.18(d). The requirement for a fee for consideration of the petition to make special for applications pertaining to Green Technologies has been waived.

The instant petition complies with items 1 – 8 above. Accordingly, the above-identified application has been accorded "special" status.

Telephone inquires concerning this decision should be directed to Henry C. Yuen at 571-272-4856.

This application will be forwarded to the Technology Center Art Unit 3747 for action on the merits commensurate with this decision.

/Henry C. Yuen/

Henry C. Yuen
Quality Assurance Specialist
Technology Center TC 3700

UNITED STATES PATENT AND TRADEMARK OFFICE

Commissioner for Patents
United States Patent and Trademark Office
P.O. Box 1450
Alexandria, VA 22313-1450
www.uspto.gov

ZILKA-KOTAB, PC- IBM
P.O. BOX 721120
SAN JOSE CA 95172-1120

MAILED

SEP 02 2011

OFFICE OF PETITIONS

In re Application of :
Ulrich Mayer et al. :
Application No. 12/405,418 : DECISION ON PETITION
Filed: March 17, 2009 :
Attorney Docket No. :
IBM1P216/DE920070154US1

This is a decision on the petition under the unintentional provisions of 37 CFR 1.137(b), filed August 15, 2011, to revive the above-identified application.

The petition is **GRANTED**.

The application became abandoned for failure to reply in a timely manner to the non-final Office action mailed, December 17, 2010, which set a shortened statutory period for reply of three (3) months. No extensions of time under the provisions of 37 CFR 1.136(a) were obtained. Accordingly, the application became abandoned on
March 18, 2011.

The petition satisfies the requirements of 37 CFR 1.137(b) in that petitioner has supplied (1) the reply in the form of an amendment, (2) the petition fee of $1,620, and (3) a proper statement of unintentional delay.

It is not apparent whether the person signing the statement of unintentional delay was in a position to have firsthand or direct knowledge of the facts and circumstances of the delay at issue. Nevertheless, such statement is being treated as having been made as the result of a reasonable inquiry into the facts and circumstances of such delay. See 37 CFR 10.18(b) and Changes to Patent Practice and Procedure; Final Rule Notice, 62 Fed. Reg. 53131, 53178 (October 10, 1997), 1203 Off. Gaz. Pat. Office 63, 103 (October 21, 1997). In the event that such an inquiry has not been made, petitioner must make such an inquiry. If such inquiry results in the discovery that it is not correct that the entire delay in filing the required reply from the due date for the reply until the

filing of a grantable petition pursuant to 37 CFR 1.137(b) was unintentional, petitioner must notify the Office.

Telephone inquiries concerning this decision should be directed to JoAnne Burke at (571) 272-4584.

This application is being referred to Technology Center AU 2113 for appropriate action by the Examiner in the normal course of business.

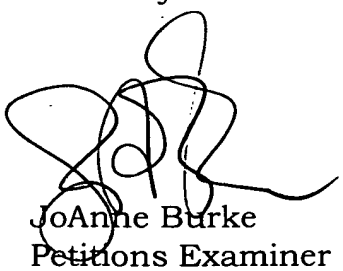

JoAnne Burke
Petitions Examiner
Office of Petitions

UNITED STATES PATENT AND TRADEMARK OFFICE

UNITED STATES DEPARTMENT OF COMMERCE
United States Patent and Trademark Office
Address: COMMISSIONER FOR PATENTS
P.O. Box 1450
Alexandria, Virginia 22313-1450
www.uspto.gov

APPLICATION NO.	FILING DATE	FIRST NAMED INVENTOR	ATTORNEY DOCKET NO.	CONFIRMATION NO.
12/405,422	03/17/2009	Takuji Suzuki	TOSHP388US	3528

7590 09/20/2011

TUROCY & WATSON, LLP
127 Public Square
57th Floor, Key Tower
CLEVELAND, OH 44114

EXAMINER	
BLOCH, MICHAEL	

ART UNIT	PAPER NUMBER
3735	

NOTIFICATION DATE	DELIVERY MODE
09/20/2011	ELECTRONIC

DECISION GRANTING PETITION UNDER 37 CFR 1.138(d)

The declaration of express abandonment is recognized

This is in response to the petition under 37 CFR 1.138(d), requesting for a refund of any previously paid search fee and excess claims fee in the above-identified application.

The petition is granted.

The express abandonment is recognized. Any previously paid search fee and excess claims fee are hereby refunded.

Telephone inquiries should be directed to the Office of Data Management at (571) 272-4200.

Patent Publication Branch
Office of Data Management

SPE RESPONSE FOR CERTIFICATE OF CORRECTION

Paper No.:20110921

DATE : September 09, 2011

TO SPE OF : ART UNIT 1643

SUBJECT : Request for Certificate of Correction on Patent No.: 7,968,686

A response is requested with respect to the accompanying request for a certificate of correction.

Please complete this form and return with file, within **7** days to:
Certificates of Correction Branch - ST (South Tower) 9A22
Palm location **7590** - Tel. No. (703) 305-8309

With respect to the change(s) requested, correcting Office and/or Applicant's errors, should the patent read as shown in the certificate of correction? No new matter should be introduced, nor should the scope or meaning of the claims be changed.

Thank You For Your Assistance **Certificates of Correction Branch**

The request for issuing the above-identified correction(s) is hereby:

Note your decision on the appropriated box.

☐ **Approved** All changes apply.

☒ **Approved in Part** Specify below which changes **do not** apply.

☐ **Denied** State the reasons for denial below.

Comments:

The updated filing receipt dated July 2, 2009 states that Application No. 12/405,458 (now US 7,968,686) claims
benefit of 61/039,907, not 61/039,902 as in the Request for Certificate of Correction dated 09/09/2011.

/MISOOK YU/
Supervisory Patent Examiner.Art Unit 1642

CERTIFICATION OF FACSIMILE TRANSMISSION

I hereby certify that this paper is being facsimile transmitted to the Patent and Trademark Office on the date shown below.

Type or print name of person signing certification

Signature Date

PATENT
IN THE UNITED STATES PATENT AND TRADEMARK OFFICE

U. S. Patent No.	:	7,968,686
Issued:	:	June 28, 2011
First Applicant	:	Andrew Ihor KORYTKO
Serial No.	:	12/405,458
Application Date	:	March 17, 2009
Entitled	:	GLUCAGON RECEPTOR ANTAGONISTS
Docket No.	:	X-17255

REQUEST FOR CERTIFICATE OF CORRECTION
UNDER 37 C.F.R. 1.322

Commissioner for Patents
P.O. Box 1450
Alexandria, VA 22313-1450

Sir:

The patentees of the above-identified patent respectfully request that you issue a Certificate of Correction to correct errors which occurred during the printing of the patent. The printing errors are not errors of the patentee as evidence by, for example, domestic priority data as claimed by applicant which was indicated on the updated filing receipt dated July 2, 2009. A copy of Form PTO 1050 on which the errors are specified accompanies this document.

Respectfully submitted,

/Andrea M. Castetter/
Andrea M. Castetter
Agent for Patentees
Registration No. 63,964
Phone: 317-433-0895

Eli Lilly and Company
Patent Division
P.O. Box 6288
Indianapolis, Indiana 46206-6288
September 9, 2011

PTO/SB/44 (09-07)
Approved for use through 08/31/2013. OMB 0651-0033
U.S. Patent and Trademark Office; U.S. DEPARTMENT OF COMMERCE
Under the Paperwork Reduction Act of 1995, no persons are required to respond to a collection of information unless it displays a valid OMB control number.
(Also Form PTO-1050)

UNITED STATES PATENT AND TRADEMARK OFFICE
CERTIFICATE OF CORRECTION

PATENT NO. : 7,968,686

APPLICATION NO.: 12/405,458

ISSUE DATE : June 28, 2011

INVENTOR(S) : Andrew Ihor KORYTKO
Rohn Lee MILLICAN, Jr.

It is certified that an error appears or errors appear in the above-identified patent and that said Letters Patent is hereby corrected as shown below:

On the front page of the patent column 1, section 65, under US 2009/0252727 A1 Oct. 8, 2009, please insert -- "Related U.S. Application Data" then add a line and insert --"Provisional application No. 61/039,902, filed on March 27, 2008.--

In Column 1, line 1, under Other Publications, delete "Experiemental" and insert -- Experimental --, therefor

In Column 1, line 6, under Other Publications, delete "hmproves" and insert -- Improves --, therefor

~~On the first page of the specification, please insert the following cross reference after the title: "This application claims the priority of U.S. provisional application No. 61/039,902, filed March 27, 2008."~~ DO NOT ENTER: /M.Y.

MAILING ADDRESS OF SENDER (Please do not use customer number below):

Eli Lilly and Company
Patent Division/AMC
P. O. Box 6288

This collection of information is required by 37 CFR 1.322, 1.323, and 1.324. The information is required to obtain or retain a benefit by the public which is to file (and by the USPTO to process) an application. Confidentiality is governed by 35 U.S.C. 122 and 37 CFR 1.14. This collection is estimated to take 1.0 hour to complete, including gathering, preparing, and submitting the completed application form to the USPTO. Time will vary depending upon the individual case. Any comments on the amount of time you require to complete this form and/or suggestions for reducing this burden, should be sent to the Chief Information Officer, U.S. Patent and Trademark Office, U.S. Department of Commerce, P.O. Box 1450, Alexandria, VA 22313-1450. DO NOT SEND FEES OR COMPLETED FORMS TO THIS ADDRESS. **SEND TO: Attention Certificate of Corrections Branch, Commissioner for Patents, P.O. Box 1450, Alexandria, VA 22313-1450.**

If you need assistance in completing the form, call 1-800-PTO-9199 and select option 2.

Privacy Act Statement

The **Privacy Act of 1974 (P.L. 93-579)** requires that you be given certain information in connection with your submission of the attached form related to a patent application or patent. Accordingly, pursuant to the requirements of the Act, please be advised that: (1) the general authority for the collection of this information is 35 U.S.C. 2(b)(2); (2) furnishing of the information solicited is voluntary; and (3) the principal purpose for which the information is used by the U.S. Patent and Trademark Office is to process and/or examine your submission related to a patent application or patent. If you do not furnish the requested information, the U.S. Patent and Trademark Office may not be able to process and/or examine your submission, which may result in termination of proceedings or abandonment of the application or expiration of the patent.

The information provided by you in this form will be subject to the following routine uses:

1. The information on this form will be treated confidentially to the extent allowed under the Freedom of Information Act (5 U.S.C. 552) and the Privacy Act (5 U.S.C 552a). Records from this system of records may be disclosed to the Department of Justice to determine whether disclosure of these records is required by the Freedom of Information Act.
2. A record from this system of records may be disclosed, as a routine use, in the course of presenting evidence to a court, magistrate, or administrative tribunal, including disclosures to opposing counsel in the course of settlement negotiations.
3. A record in this system of records may be disclosed, as a routine use, to a Member of Congress submitting a request involving an individual, to whom the record pertains, when the individual has requested assistance from the Member with respect to the subject matter of the record.
4. A record in this system of records may be disclosed, as a routine use, to a contractor of the Agency having need for the information in order to perform a contract. Recipients of information shall be required to comply with the requirements of the Privacy Act of 1974, as amended, pursuant to 5 U.S.C. 552a(m).
5. A record related to an International Application filed under the Patent Cooperation Treaty in this system of records may be disclosed, as a routine use, to the International Bureau of the World Intellectual Property Organization, pursuant to the Patent Cooperation Treaty.
6. A record in this system of records may be disclosed, as a routine use, to another federal agency for purposes of National Security review (35 U.S.C. 181) and for review pursuant to the Atomic Energy Act (42 U.S.C. 218(c)).
7. A record from this system of records may be disclosed, as a routine use, to the Administrator, General Services, or his/her designee, during an inspection of records conducted by GSA as part of that agency's responsibility to recommend improvements in records management practices and programs, under authority of 44 U.S.C. 2904 and 2906. Such disclosure shall be made in accordance with the GSA regulations governing inspection of records for this purpose, and any other relevant (*i.e.*, GSA or Commerce) directive. Such disclosure shall not be used to make determinations about individuals.
8. A record from this system of records may be disclosed, as a routine use, to the public after either publication of the application pursuant to 35 U.S.C. 122(b) or issuance of a patent pursuant to 35 U.S.C. 151. Further, a record may be disclosed, subject to the limitations of 37 CFR 1.14, as a routine use, to the public if the record was filed in an application which became abandoned or in which the proceedings were terminated and which application is referenced by either a published application, an application open to public inspection or an issued patent.
9. A record from this system of records may be disclosed, as a routine use, to a Federal, State, or local law enforcement agency, if the USPTO becomes aware of a violation or potential violation of law or regulation.

UNITED STATES PATENT AND TRADEMARK OFFICE

Commissioner for Patents
United States Patent and Trademark Office
P.O. Box 1450
Alexandria, VA 22313-1450
www.uspto.gov

Decision Date : October 26,2011

In re Application of :

Christopher Suprock

Application No : 12405513

Filed : 17-Mar-2009

Attorney Docket No : 298065-00011

DECISION ON REQUEST TO WITHDRAW AS ATTORNEY/AGENTOF RECORD

This is an electronic decision on the Request to Withdraw as attorney or agent of record under 37 CFR § 1.36(b), filed October 26,2011

The request is **APPROVED.**

The request was signed by STEPHEN A. BUCCHIANERI (registration no. 54928) on behalf of all attorneys/agents associated with Customer Number 03705 . All attorneys/agents associated with Cusotmer Number 03705 have been withdrawn.

Since there are no remaining attorneys of record, all future communications from the Office will be directed to the first named inventor or assignee that has properly made itself of record pursuant to 37 CFR 3.71, with correspondence address:

Name	CHRISTOPHER
Name2	SUPROCK
Address 1	SUPROCK TECHNOLOGIES, LLC
Address 2	25 ASHBROOK ROAD
City	EXETER
State	NH
Postal Code	03833
Country	US

As a reminder, requester is required to inform the first named inventor or assignee that has properly made itself of record pursuant to 37 CFR 3.71 of the electronically processed petition.

Telephone inquiries concerning this decision should be directed to the Patent Electronic Business Center (EBC) at 866-217-9197.

Office of Petitions

Doc Code: PET.AUTO **Document Description: Petition automatically granted by EFS-Web**	PTO/SB/83 U.S. Patent and Trademark Office Department of Commerce

Electronic Petition Request	**REQUEST FOR WITHDRAWAL AS ATTORNEY OR AGENT AND CHANGE OF CORRESPONDENCE ADDRESS**
Application Number	12405513
Filing Date	17-Mar-2009
First Named Inventor	Christopher Suprock
Art Unit	3726
Examiner Name	DANIEL HOWELL
Attorney Docket Number	298065-00011
Title	Smart Machining System and Smart Tool Holder Therefor

◉ Please withdraw me as attorney or agent for the above identified patent application and the practitioners of record associated with Customer Number: 03705

The reason(s) for this request are those described in 37 CFR:

10.40(c)(5)

Certifications

☒ I/We have given reasonable notice to the client, prior to the expiration of the response period, that the practitioner(s) intend to withdraw from employment

☒ I/We have delivered to the client or a duly authorized representative of the client all papers and property (including funds) to which the client is entitled

☒ I/We have notified the client of any responses that may be due and the time frame within which the client must respond

Change the correspondence address and direct all future correspondence to the first named inventor or assignee that has properly made itself of record pursuant to 37 CFR 3.71:

Name	CHRISTOPHER SUPROCK
Address	SUPROCK TECHNOLOGIES, LLC 25 ASHBROOK ROAD
City	EXETER
State	NH
Postal Code	03833
Country	US

I am authorized to sign on behalf of myself and all withdrawing practitioners.	
Signature	/STEPHEN A. BUCCHIANERI/
Name	STEPHEN A. BUCCHIANERI
Registration Number	54928

UNITED STATES PATENT AND TRADEMARK OFFICE

Commissioner for Patents
United States Patent and Trademark Office
P.O. Box 1450
Alexandria, VA 22313-1450
www.uspto.gov

Decision Date : September 28,2011

In re Application of :

Takuya Hando

DECISION ON PETITION

UNDER CFR 1.313(c)(2)

Application No : 12405536

Filed : 17-Mar-2009

Attorney Docket No : P09703US00/JAH

This is an electronic decision on the petition under 37 CFR 1.313(c)(2), filed September 28,201,1to withdraw the above-identified application from issue after payment of the issue fee.

The petition is **GRANTED.**

The above-identified application is withdrawn from issue for consideration of a submission under 37 CFR 1.114 (request for continued examination). See 37 CFR 1.313(c)(2).

Petitioner is advised that the issue fee paid in this application cannot be refunded. If, however, this application is again allowed, petitioner may request that it be applied towards the issue fee required by the new Notice of Allowance.

Telephone inquiries concerning this decision should be directed to the Patent Electronic Business Center (EBC) at 866-217-9197.

This application file is being referred to Technology Center AU 2835 for processing of the request for continuing examination under 37 CFR 1.114 .

Office of Petitions

Doc Code: PET.AUTO Document Description: Petition automatically granted by EFS-Web	PTO/SB/140 U.S. Patent and Trademark Office Department of Commerce

Electronic Petition Request	**PETITION TO WITHDRAW AN APPLICATION FROM ISSUE AFTER PAYMENT OF THE ISSUE FEE UNDER 37 CFR 1.313(c)**
Application Number	12405536
Filing Date	17-Mar-2009
First Named Inventor	Takuya Hando
Art Unit	2835
Examiner Name	HOA NGUYEN
Attorney Docket Number	P09703US00/JAH
Title	WIRING BOARD HAVING SOLDER BUMP AND METHOD FOR MANUFACTURING THE SAME

An application may be withdrawn from issue for further action upon petition by the applicant. To request that the Office withdraw an application from issue, applicant must file a petition under this section including the fee set forth in § 1.17(h) and a showing of good and sufficient reasons why withdrawal of the application from issue is necessary.

APPLICANT HEREBY PETITIONS TO WITHDRAW THIS APPLICATION FROM ISSUE UNDER 37 CFR 1.313(c).

A grantable petition requires the following items:
(1) Petition fee; and
(2) One of the following reasons:
(a) Unpatentability of one or more claims, which must be accompanied by an unequivocal statement that one or more claims are unpatentable, an amendment to such claim or claims, and an explanation as to how the amendment causes such claim or claims to be patentable;
(b) Consideration of a request for continued examination in compliance with § 1.114 (for a utility or plant application only); or
(c) Express abandonment of the application. Such express abandonment may be in favor of a continuing application, but not a CPA under 37 CFR 1.53(d).

Petition Fee

☐ Applicant claims SMALL ENTITY status. See 37 CFR 1.27.

☐ Applicant is no longer claiming SMALL ENTITY status. See 37 CFR 1.27(g)(2).

☐ Applicant(s) status remains as SMALL ENTITY.

☒ Applicant(s) status remains as other than SMALL ENTITY

Reason for withdrawal from issue

◯ One or more claims are unpatentable ◉ Consideration of a request for continued examination (RCE) (List of Required Documents and Fees) ◯ Applicant hereby expressly abandons the instant application (any attorney/agent signing for this reason must have power of attorney pursuant to 37 CFR 1.32(b)).
RCE request,submission, and fee. ☐ I certify, in accordance with 37 CFR 1.4(d)(4) that : The RCE request ,submission, and fee have already been filed in the above-identified application on ☒ Are attached.
THIS PORTION MUST BE COMPLETED BY THE SIGNATORY OR SIGNATORIES I certify, in accordance with 37 CFR 1.4(d)(4) that I am: ◉ An attorney or agent registered to practice before the Patent and Trademark Office who has been given power of attorney in this application. ◯ An attorney or agent registered to practice before the Patent and Trademark Office, acting in a representative capacity. ◯ A sole inventor ◯ A joint inventor; I certify that I am authorized to sign this submission on behalf of all of the inventors ◯ A joint inventor; all of whom are signing this e-petition ◯ The assignee of record of the entire interest that has properly made itself of record pursuant to 37 CFR 3.71

Signature	/jeffrey a. haeberlin/
Name	Jeffrey A. Haeberlin
Registration Number	40630

UNITED STATES PATENT AND TRADEMARK OFFICE

Commissioner for Patents
United States Patent and Trademark Office
P.O. Box 1450
Alexandria, VA 22313-1450
www.uspto.gov

KNOBBE MARTENS
OLSON & BEAR LLP
2040 MAIN STREET
FOURTEENTH FLOOR
IRVINE CA 92614

MAILED
JAN 18 2012
OFFICE OF PETITIONS

In re Application of :
Silberg :
Application No. 12/405,616 : DECISION
Filed/Deposited: 17 March, 2009 :
Attorney Docket No. BASI.001A :

This is a decision on the petition filed on 6 September, 2011, for revival of an application abandoned due to unintentional delay under 37 C.F.R. §1.137(b).

NOTE:

It is not apparent whether the person signing the statement of unintentional delay was in a position to have firsthand or direct knowledge of the facts and circumstances of the delay at issue.

Nevertheless, such statement is being treated as having been made as the result of a reasonable inquiry into the facts and circumstances of such delay.[1] *In the event that such an inquiry has not been made, Petitioner* ***must*** *make such an inquiry.*

If such inquiry results in the discovery that it is not correct that the entire delay in filing the required reply from the due date for the reply until the filing of a grantable petition pursuant to 37 C.F.R. §1.137(b) was unintentional, Petitioner ***must*** *notify the Office.*

The record (including the petition filed on 6 September, 2011) does not necessitate a finding that the delay between midnight 12 May, 2010 (the date of abandonment), and 6 September, 2011 (the date of the filing of grantable petition), was not unintentional.

Rather, the Patent and Trademark Office is relying in this matter on the duty of candor and good faith of Petitioner/Counsel Andrew N. Merickel (Reg. No. 53,317) when

[1] See 37 C.F.R. §11.18(b), formerly §10.18(b) and Changes to Patent Practice and Procedure; Final Rule Notice, 62 Fed. Reg. 53131, 53178 (October 10, 1997), 1203 Off. Gaz. Pat. Office 63, 103 (October 21, 1997).

accepting Petitioner's representation that the delay in filing the response was unintentional.[2]

The petition pursuant to 37 C.F.R. §1.137(b) is **GRANTED**.

As to the Allegations
of Unintentional Delay

The requirements of a grantable petition pursuant to 37 C.F.R. §1.137(b) are the petition and fee therefor, a reply, a proper statement of unintentional delay under the regulation, and, where applicable, a terminal disclaimer and fee.

BACKGROUND

The record reflects as follows:

Petitioner failed to reply timely and properly to the final Office action mailed on 12 February, 2010, with reply due absent extension of time on or before 12 May, 2010.

The application went abandoned by operation of law after midnight 12 May, 2010.

The Office mailed the Notice of Abandonment on 2 September, 2010.

On 6 September, 2011, Petitioner filed a petition, with fee, pursuant to 37 C.F.R. §1.137(b) with a reply averred to have been in the form of a continuation application (Application No. 13/205,097, filed on 8 August, 2011) and made a statement of unintentional delay. (Notably, Petitioner failed to include with the petition documentation (e.g., date-stamped receipt card, electronic acknowledgment receipt) in support of the averment of reply.)

As noted above, the record (including the petition filed on 6 September, 2011) does not necessitate a finding that the delay between midnight 12 May, 2010 (the date of abandonment), and 6 September, 2011 (the date of the filing of grantable petition), was not unintentional.

Rather, the Patent and Trademark Office is relying in this matter on the duty of candor and good faith of Petitioner/Counsel Andrew N. Merickel (Reg. No. 53,317) when accepting Petitioner's representation that the delay in filing the response was unintentional.[3]

---

[2] See Changes to Patent Practice and Procedure, 62 Fed. Reg. at 53160 and 53178, 1203 Off. Gaz. Pat. Office at 88 and 103 (responses to comments 64 and 109)(applicant obligated under 37 C.F.R. ' 10.18 to inquire into the underlying facts and circumstances when providing the statement required by 37 C.F.R. ' 1.137(b) to the Patent and Trademark Office).

[3] See Changes to Patent Practice and Procedure, 62 Fed. Reg. at 53160 and 53178, 1203 Off. Gaz. Pat. Office at 88 and 103 (responses to comments 64 and 109)(applicant obligated under 37 C.F.R. ' 10.18 to inquire into the underlying facts and circumstances when providing the statement required by 37 C.F.R. ' 1.137(b) to the Patent and Trademark Office).

Petitioners' attentions always are directed to the guidance in the Commentary at MPEP §711.03(c) as to the showing regarding unintentional delay and a petition pursuant to 37 C.F.R. §1.137(b).

The availability of applications and application papers online to applicants/practitioners who diligently associate their Customer Number with the respective application(s) now provides an applicant/practitioner on-demand information as to events/transactions in an application.

Out of an abundance of caution, Petitioners always are reminded that those registered to practice and all others who make representations before the Office **must** inquire into the underlying facts of representations made to the Office and support averments with the appropriate documentation–since all owe to the Office the continuing duty to disclose.[4]

STATUTES, REGULATIONS

Congress has authorized the Commissioner to "revive an application if the delay is shown to the satisfaction of the Commissioner to have been "unavoidable." 35 U.S.C. §133 (1994). And the regulations at 37 C.F.R. §1.137(a) and (b) set forth the requirements for a Petitioner to revive a previously unavoidably or unintentionally, respectively, abandoned application.[5,6]

Moreover, the Office has set forth in the Commentary at MPEP §711.03(c)(I) the showing and timeliness requirements for a proper showing for relief under 37 C.F.R. §1.181 in these matters.

Decisions on reviving abandoned applications on the basis of "unavoidable" delay have adopted the reasonably prudent person standard in determining if the delay was unavoidable:

> The word 'unavoidable' . . . is applicable to ordinary human affairs, and requires no more or greater care or diligence than is generally used and observed by

---

[4] See supplement of 17 June, 1999. The Patent and Trademark Office is relying on petitioner's duty of candor and good faith and accepting a statement made by Petitioner. See Changes to Patent Practice and Procedure, 62 Fed. Reg. at 53160 and 53178, 1203 Off. Gaz. Pat. Office at 88 and 103 (responses to comments 64 and 109)(applicant obligated under 37 C.F.R. §11.18, formerly §10.18, to inquire into the underlying facts and circumstances when providing statements to the Patent and Trademark Office).

[5] See: Changes to Patent Practice and Procedure; Final Rule Notice, 62 Fed. Reg. at 53158-59 (October 10, 1997), 1203 Off. Gaz. Pat. Office at 86-87 (October 21, 1997).

[6] The language of 35 U.S.C. §133 and 37 C.F.R. §1.137(a) is clear, unambiguous, and without qualification: the delay in tendering the reply to the outstanding Office action, as well as filing the first petition seeking revival, must have been unavoidable for the reply now to be accepted on petition. (Therefore, by example, an unavoidable delay in the payment of the Filing Fee might occur if a reply is shipped by the US Postal Service, but due to catastrophic accident, the delivery is not made.) Delays in responding properly raise the question whether delays are unavoidable. Where there is a question whether the delay was unavoidable, Petitioners must meet the burden of establishing that the delay was unavoidable within the meaning of 35 U.S.C. §133 and 37 C.F.R. §1.137(a) And the Petitioner must be diligent in attending to the matter. Failure to do so does not constitute the care required under Pratt, and so cannot satisfy the test for diligence and due care. (By contrast, unintentional delays are those that do not satisfy the very strict statutory and regulatory requirements of unavoidable delay, and also, by definition, are not intentional.))

> prudent and careful men in relation to their most important business. It permits them in the exercise of this care to rely upon the ordinary and trustworthy agencies of mail and telegraph, worthy and reliable employees, and such other means and instrumentalities as are usually employed in such important business. If unexpectedly, or through the unforeseen fault or imperfection of these agencies and instrumentalities, there occurs a failure, it may properly be said to be unavoidable, all other conditions of promptness in its rectification being present.[7]

As to Allegations of
Unintentional Delay

The requirements of a grantable petition pursuant to 37 C.F.R. §1.137(b) are the petition and fee therefor, a reply, a proper statement of unintentional delay under the regulation, and, where applicable, a terminal disclaimer and fee.

It appears that the requirements under the rule have been satisfied.

CONCLUSION

Accordingly, the petition pursuant to 37 C.F.R. §1.137(b) is **granted** (for the purposes of continuity).

The instant application is released to the Technology Center/AU 3767 for further processing exclusively for continuity in due course.

Petitioner may find it beneficial to view Private PAIR within a fortnight of the instant decision to ensure that the revival has been acknowledged by the TC/AU in response to this decision. It is noted that all inquiries with regard to status need be directed to the TC/AU where that change of status must be effected—that does not occur in the Office of Petitions.

---

[7] In re Mattullath, 38 App. D.C. 497, 514-15 (1912)(quoting Ex parte Pratt, 1887 Dec. Comm'r Pat. 31, 32-33 (1887)); see also Winkler v. Ladd, 221 F. Supp. 550, 552, 138 USPQ 666, 167-68 (D.D.C. 1963), aff'd, 143 USPQ 172 (D.C. Cir. 1963); Ex parte Henrich, 1913 Dec. Comm'r Pat. 139, 141 (1913). In addition, decisions on revival are made on a "case-by-case basis, taking all the facts and circumstances into account." Smith v. Mossinghoff, 671 F.2d 533, 538, 213 USPQ 977, 982 (D.C. Cir. 1982). Finally, a petition cannot be granted where a petitioner has failed to meet his or her burden of establishing that the delay was "unavoidable." Haines v. Quigg, 673 F. Supp. 314, 316-17, 5 USPQ2d 1130, 1131-32 (N.D. Ind. 1987).

Telephone inquiries regarding this decision may be directed to the undersigned at (571) 272-3214—it is noted, however , that all practice before the Office is in writing (see: 37 C.F.R. §1.2[8]) and the proper authority for action on any matter in this regard are the statutes (35 U.S.C.), regulations (37 C.F.R.) and the commentary on policy (MPEP). Therefore, no telephone discussion may be controlling or considered authority for Petitioner's action(s).

/John J. Gillon, Jr./
John J. Gillon, Jr.
Senior Attorney
Office of Petitions

[8] The regulations at 37 C.F.R. §1.2 provide:

§1.2 Business to be transacted in writing.

All business with the Patent and Trademark Office should be transacted in writing. The personal attdance of applicants or their attorneys or agents at the Patent and Trademark Office is unnecessary. The action of the Patent and Trademark Office will be based exclusively on the written record in the Office. No attention will be paid to any alleged oral promise, stipulation, or understanding in relation to which there is disagreement or doubt.

UNITED STATES PATENT AND TRADEMARK OFFICE

Commissioner for Patents
United States Patent and Trademark Office
P.O. Box 1450
Alexandria, VA 22313-1450
www.uspto.gov

MAILED
AUG 09 2011
OFFICE OF PETITIONS

INTELLECTUAL PROPERTY DEPT./
DEWITT ROSS & STEVENS
WISCONSIN ALUMNI RESEARCH FOUNDATION
2 EAST MIFFLIN STREET,
SUITE #600
MADISON WI 53703-2865

In re Application of	:	
COMBS, et al	:	
Application No. 12/405,650	:	ON PETITION
Filed: March 17, 2009	:	
Attorney Docket No. 09820.418	:	

This is a decision on the petition under the unintentional provisions of 37 CFR 1.137(b), filed July 12, 2011, to revive the above-identified application.

The petition is **GRANTED**.

The application became abandoned for failure to timely file a reply within the meaning of 37 CFR 1.113 to the final Office action of January 10, 2011. The proposed reply required for consideration of a petition to revive must be a Notice of Appeal (and appeal fee required by 37 CFR 41.20(b)(2), an amendment that *prima facie* places the application in condition for allowance, a Request for Continued Examination and submission (37 CFR 1.114), or the filing of a continuing application under 37 CFR 1.53(b). See MPEP 711.03(c)(II)(A)(2). No extensions of time pursuant to the provisions of 37 CFR 1.136(a) were obtained. Accordingly, the date of abandonment of this application is April 11, 2011.

The petition satisfies the requirements of 37 CFR 1.137(b) in that petitioner has supplied (1) the reply in the form of a Request for Continued Examination (RCE) and fee of $405, and the submission required by 37 CFR 1.114; (2) the petition fee of $810; and (3) a proper statement of unintentional delay.

Telephone inquiries concerning this decision should be directed to the undersigned at (571) 272-6735.

This application is being referred to Technology Center AU 1777 for processing of the RCE and for appropriate action by the Examiner in the normal course of business on the amendment submitted in accordance with 37 CFR 1.114.

/Diane C. Goodwyn/
Diane C. Goodwyn
Petitions Examiner
Office of Petitions

UNITED STATES PATENT AND TRADEMARK OFFICE

UNITED STATES DEPARTMENT OF COMMERCE
United States Patent and Trademark Office
Address: COMMISSIONER FOR PATENTS
P.O. Box 1450
Alexandria, Virginia 22313-1450
www.uspto.gov

APPLICATION NUMBER	FILING OR 371(C) DATE	FIRST NAMED APPLICANT	ATTY. DOCKET NO./TITLE
12/405,650	03/17/2009	David Kenneth Combs	09820.418

CONFIRMATION NO. 3960

60961
Intellectual Property Dept./Dewitt Ross & Stevens
Wisconsin Alumni Research Foundation
2 East Mifflin Street,
Suite #600
Madison, WI 53703-2865

POA ACCEPTANCE LETTER

OC00000049085101

Date Mailed: 08/02/2011

NOTICE OF ACCEPTANCE OF POWER OF ATTORNEY

This is in response to the Power of Attorney filed 08/19/2009.

The Power of Attorney in this application is accepted. Correspondence in this application will be mailed to the above address as provided by 37 CFR 1.33.

/dcgoodwyn/

Office of Data Management, Application Assistance Unit (571) 272-4000, or (571) 272-4200, or 1-888-786-0101

IN THE UNITED STATES PATENT AND TRADEMARK OFFICE

In re Application of:	James M. DUNBAR
Serial No.:	12/405,658
Filed:	March 17, 2009
Title:	FEEDBACK CONTROL SCHEME FOR OPTIMIZING DEWATERING PROCESSES
Group Art Unit:	1776
Examiner:	Peter A. HRUSKOCI
Docket Ref.:	50891.3.P01US02

14 February 2011

Commissioner of Patents
U.S. Patent and Trademark Office
P.O. Box 1450
Alexandria, VA 22314

STATEMENTS OF SPECIAL STATUS FOR THE ELIGIBILITY REQUIREMENT TO ACCOMPANY PETITION TO MAKE SPECIAL UNDER THE GREEN TECHNOLOGY PILOT PROGRAM

Dear Sir:

In accordance with item number 3 on the accompanying PETITION TO MAKE SPECIAL UNDER THE GREEN TECHNOLOGY PILOT PROGRAM, Applicant respectfully submits the subject matter of this application contributes to the conservation of energy.

Special status is sought because the invention materially contributes to the more efficient utilization and conservation of energy resources relating to the reduction of energy consumption in industrial equipment. Applicant respectfully submits that the application disclosure is clear on its face in that the claimed invention materially contributes to such energy conservation by providing the papermaking industry with a cost-effective dewatering mechanism for reducing energy demands. Specific attention is drawn to at least paragraph [0073] of the published application reproduced herein below.

"It should be understood that the present invention provides several important environmental and economic benefits when used in conjunction with waste treatment processing. Through such processing in the present sludge press implementation described, improvements may be shown in increased sludge dryness from 42 to 51% dry and allowed

boiler systems to increase sludge burn from 40 to 62 tons per day (TPD). For a typical ash content of 30%, sludge landfill disposal volume can be reduced by more than 2/3. In this example, more than 10,000 cubic yards reduction of landfill volume per year may be realized. In a wood fuel burning environment, the boiler particulate can be reduced by 13% resulting from the dry sludge binding the airborne wood fines to the grate and reducing wood fine particulate carry over. Landfill stability can be significantly improved as a result of the increased ash versus sludge tons. In terms of energy, sludge at 50% dry had a BTU content of 2600 BTU/lb. At 22 TPD added burn, oil usage can be reduced in some cases by 35,000 barrels of oil per year."

Other than the publication fee, no fee is believed to be required with this petition. However, the Commissioner is hereby authorized to charge any additional fees, and credit any over payments to Deposit Account No. 503807.

Respectfully submitted,

James M. DUNBAR

By: /Dennis R. Haszko, Reg. No. 39,575/

Dennis R. Haszko, Reg. No. 39,575
Patent Law Office of D. R. Haszko
499 Mosher Hill Road
Farmington, ME 04938
Tel: (207) 778-4870
Fax: (888) 480-9618

Doc Code: PET.GREEN
Document Description: Petition for Green Tech Pilot

PTO/SB/420 (11-10)
Approved for use through 01/31/2011. OMB 0651-0062
U.S. Patent and Trademark Office; U. S. DEPARTMENT OF COMMERCE
Under the Paperwork Reduction Act of 1995, no persons are required to respond to a collection of information unless it displays a valid OMB control number.

PETITION TO MAKE SPECIAL UNDER THE GREEN TECHNOLOGY PILOT PROGRAM

Attorney Docket Number: 50891.3.P01US02	Application Number (if known): 12/405,658	Filing date: 17 MARCH 2009
First Named Inventor: James M. DUNBAR		
Title: FEEDBACK CONTROL SCHEME FOR OPTIMIZING DEWATERING PROCESSES		

APPLICANT HEREBY REQUESTS TO PARTICIPATE IN THE GREEN TECHNOLOGY PILOT PROGRAM FOR THE ABOVE-IDENTIFIED APPLICATION. See Instruction Sheet on page 2.

This petition must be timely filed electronically using the USPTO electronic filing system, EFS-Web.

1. By filing this petition:

   Applicant is requesting early publication: Applicant hereby requests early publication under 37 CFR 1.219 and the publication fee set forth in 37 CFR 1.18(d) accompanies this request.

2. By filing this petition: applicant is agreeing to make an election without traverse in a telephonic interview and elect an invention that meets the eligibility requirements for the Green Technology Pilot Program, if the Office determines that the claims are not obviously directed to a single invention. See Instruction Sheet.

3. This request is accompanied by statements of special status for the eligibility requirement.

4. The application contains no more than three (3) independent claims and twenty (20) total claims.

5. The application does not contain any multiple dependent claims.

6. Other attachments: Preliminary Amendment

Signature /Dennis R. Haszko, Reg. No. 39,575/	Date 14 FEB 2011
Name (Print/Typed) Dennis R. Haszko	Registration Number 39575

Note: *Signatures of all the inventors or assignees of record of the entire interest or their representative(s) are required in accordance with 37 CFR 1.33 and 11.18. Please see 37 CFR 1.4(d) for the form of the signature. If necessary, submit multiple forms for more than one signature see below*.*

☒ *Total of 1 forms are submitted.

The information is required to obtain or retain a benefit by the public which is to file (and by the USPTO to process) an application. Confidentiality is governed by 35 U.S.C. 122 and 37 CFR 1.11 and 1.14. This collection is estimated to take 12 hours to complete, including gathering, preparing, and submitting the completed application form to the USPTO. Time will vary depending upon the individual case. Any comments on the amount of time you require to complete this form and/or suggestions for reducing this burden, should be sent to the Chief Information Officer, U.S. Patent and Trademark Office, U.S. Department of Commerce, P.O. Box 1450, Alexandria, VA 22313-1450. DO NOT SEND FEES OR COMPLETED FORMS TO THIS ADDRESS. **SEND TO: Commissioner for Patents, P.O. Box 1450, Alexandria, VA 22313-1450.**

If you need assistance in completing the form, call 1-800-PTO-9199 and select option 2.

UNITED STATES PATENT AND TRADEMARK OFFICE

UNITED STATES DEPARTMENT OF COMMERCE
United States Patent and Trademark Office
Address: COMMISSIONER FOR PATENTS
P.O. Box 1450
Alexandria, Virginia 22313-1450
www.uspto.gov

APPLICATION NO.	FILING DATE	FIRST NAMED INVENTOR	ATTORNEY DOCKET NO.	CONFIRMATION NO.
12/405,658	03/17/2009	James M. DUNBAR	50891.3.P01US02	3970

59893 7590 03/15/2011

PATENT LAW OFFICE OF D.R. HASZKO
c/o Dennis R. Haszko
499 MOSHER HILL ROAD
FARMINGTON, ME 04938

EXAMINER	
HRUSKOCI, PETER A	
ART UNIT	PAPER NUMBER
1776	

NOTIFICATION DATE	DELIVERY MODE
03/15/2011	ELECTRONIC

Please find below and/or attached an Office communication concerning this application or proceeding.

The time period for reply, if any, is set in the attached communication.

Notice of the Office communication was sent electronically on above-indicated "Notification Date" to the following e-mail address(es):

DRH@LETTERSPATENT.COM
haszko@gmail.com

UNITED STATES PATENT AND TRADEMARK OFFICE

Commissioner for Patents
United States Patent and Trademark Office
P.O. Box 1450
Alexandria, VA 22313-1450
www.uspto.gov

PATENT LAW OFFICE OF D.R. HASZKO
c/o Dennis R. Haszko
499 MOSHER HILL ROAD
FARMINGTON ME 04938

3/15/2011

In re Application of	:	
Dunbar	:	DECISION ON PETITION
Application No. 12/405,658	:	TO MAKE SPECIAL UNDER
Filed: 3/17/2009	:	THE GREEN TECHNOLOGY
Attorney Docket No. **50891.3.P01US02**	:	PILOT PROGRAM

This is a decision on the petition under 37 CFR 1.102, filed 2/14/2011, to make the above-identified application special under the pilot program for applications pertaining to Green Technologies as set forth in 74 Federal Register Notice 64666 (December 8, 2009) and amended by 75 Federal Register Notice 28554 (May 21, 2010) and 75 Federal Register Notice 69049 (November 10, 2010).

The petition is **GRANTED**.

A grantable petition to make an application special under 37 CFR 1.102 and the pilot program as set forth in 74 FR 64666 must be directed to a nonprovisional application filed under 35 USC 111(a) or be a national stage entry under 35 USC 371, exclusive of any reissue applications.

In order to qualify for special status, the following requirements must be met. 1) The application must have no more than 3 independent claims and no more than 20 total claims. 2) The application must not contain any multiple dependent claims. 3) The petition must state the basis for seeking special status, i.e., the claimed invention either: A) materially enhances the quality of the environment or B) materially contributes to: i) the discovery or development of renewable energy resources, ii) the more efficient utilization and conservation of energy resources, or iii) greenhouse gas emission reduction. 4) If the disclosure is not clear on its face that the claimed invention materially contributes under category (A) or (B), the petition must be accompanied by a statement by the applicant, assignee, or an attorney/agent registered to practice before the Office explaining how the materiality standard is met. 5) A statement that applicant will agree to make an election without traverse in a telephonic interview if a restriction requirement is made by the examiner. 6) The petition to make special must be filed electronically. 7) The petition must be filed at least one day prior to the date that a first Office Action appears in the Patent Application Information Retrieval (PAIR) system. 8) The petition must be accompanied by a request for early publication in compliance with 37 CFR 1.219 and include the publication fee as set forth in 37 CFR 1.18(d).

The requirement for a fee for consideration of the petition to make special for applications pertaining to Green Technologies has been waived.

The instant petition complies with items 1 – 8 above. Accordingly, the above-identified application has been accorded "special" status.

Telephone inquires concerning this decision should be directed to Tom Dunn at 571-272-1171.

The application is being forwarded to the Technology Center Art Unit 1776 for action on the merits commensurate with this decision.

/Tom Dunn/

Tom Dunn
Quality Assurance Specialist
Technology Center 1700

UNITED STATES PATENT AND TRADEMARK OFFICE

Commissioner for Patents
United States Patent and Trademark Office
P.O. Box 1450
Alexandria, VA 22313-1450
www.uspto.gov

MAILED

SEP 2 3 2010

OFFICE OF PETITIONS

Jonathan P. O"Brien, Ph.D.
Honigman Miller Schwartz and Cohn
350 East Michigan Avenue
Suite 300
KALAMAZOO MI 49007

In re Application of Silva :
Application No. 12/405,674 : Decision on Petition
Filing Date: March 17, 2009 :
Attorney Docket No. 224222-124543 :

This is a decision on the petition under 37 CFR 1.181 filed April 21, 2010, requesting the Office withdraw the holding of abandonment.

The petition is **granted**.

Facts

The Office mailed a Notice to File Corrected Application Papers on April 2, 2009. The notice set a period for reply of two (2) months from the mail date of the notice. The notice required the submission of:

1. An executed oath or declaration,
2. Replacement drawings,
3. $130 for excess claims over 20, and
4. A $65 surcharge.

A reply to the April 2, 2009 notice was filed May 22, 2009. The reply did not include the $130 fee for excess claims or the $65 surcharge.

The Office mailed a Notice of Incomplete Reply on June 5, 2009. The notice indicated the prior reply was incomplete because it did not include the $130 fee for excess claims or the $65 surcharge.

A response to the June 5, 2009 notice was filed June 11, 2009. The reply authorized the Office to charge the $130 excess claim fees, the $65 surcharge, and $65 for a one-month extension of time to Deposit Account No. 50-3145.

On June 12, 2009, the Office charged the $65 surcharge and the $65 payment for an extension of time to the deposit account. The Office did not charge the $130 excess claim fee to the deposit

account. A review of Office financial records indicates the balance in the deposit account exceeded $130 during the entire month of June 2009. Therefore, the reason the Office did not charge the $130 fee is unclear.

The Office mailed a Notice of Abandonment on March 31, 2010. The notice indicates the application is abandoned because a reply was never filed in response to the April 2, 2009 notice.

Discussion

The petition asserts a proper and timely reply to the April 2, 2009 notice was filed on June 11, 2009.

A review of the record indicates the Office received the June 11, 2009 reply. A review of the record also indicates the reply was timely and proper. Therefore, the holding of abandonment is hereby withdrawn.

As previously noted, the Office failed to charge the $130 excess claim fee to Deposit Account No. 50-3145 on June 12, 2009. Therefore, as part of the Office's response to the instant petition, the Office has charged the $130 fee to the deposit account.

The Office of Patent Application Processing will be informed of the instant decision and the application will be prepared for examination in due course.

Telephone inquiries regarding this communication should be directed to Petitions Attorney Steven Brantley at (571) 272-3203.

Charles Steven Brantley
Senior Petitions Attorney
Office of Petitions

UNITED STATES PATENT AND TRADEMARK OFFICE

UNITED STATES DEPARTMENT OF COMMERCE
United States Patent and Trademark Office
Address: COMMISSIONER FOR PATENTS
P.O. Box 1450
Alexandria, Virginia 22313-1450
www.uspto.gov

APPLICATION NO.	FILING DATE	FIRST NAMED INVENTOR	ATTORNEY DOCKET NO.	CONFIRMATION NO.
12/405,694	03/17/2009	STEVEN GORDON	INTELLI-13889	4037

23535 7590 08/16/2011

MEDLEN & CARROLL, LLP
101 HOWARD STREET
SUITE 350
SAN FRANCISCO, CA 94105

EXAMINER	
TSAI, CAROL S W	

ART UNIT	PAPER NUMBER
2857	

MAIL DATE	DELIVERY MODE
08/16/2011	PAPER

Please find below and/or attached an Office communication concerning this application or proceeding.

The time period for reply, if any, is set in the attached communication.

UNITED STATES PATENT AND TRADEMARK OFFICE

COMMISSIONER FOR PATENTS
UNITED STATES PATENT AND TRADEMARK OFFICE
P.O. BOX 1450
ALEXANDRIA, VA 22313-1450
www.uspto.gov

MEDLEN & CARROLL, LLP
101 HOWARD STREET
SUITE 350
SAN FRANCISCO, CA 94105

In re Application of
GORDON et al. : DECISION ON PETITION
Application No. 12/405,694 : UNDER 37 CFR 1.84
Filed March 17, 2009
Attorney Docket No. INTELLI-13889

This decision is in response to the petition filed October 13, 2009 in the above-identified application. Petitioner requests that color drawings be accepted in accordance with 37 C.F.R. 1.84(a)(2).

The petition is DISMISSED.

The petition states that color drawings of Figures 12, 32, and 34 are necessary in order to completely and accurately represent the invention.

A grantable petition under 37 C.F.R. 1.84(a)(2) requires submission of the following: (1) the appropriate fee, (2) three sets of color drawings, and (3) the required text language set forth in 37 C.F.R. 1.84 (a)(2)(iii).

The papers filed on October 13, 2009 fail to comply with the requirements set forth in 37 C.F.R. 1.84(a)(2), in that the required text language set forth in 37 C.F.R. 1.84 (a)(2)(iii) is not present.

The petition is therefore DISMISSED.

Telephone inquires concerning this decision should be directed to Feliciano Eliseo Ramos at 571-272-7925.

for Feliciano Eliseo Ramos
Supervisory Patent Examiner
Art Unit 2857
Technology Center 2800

SPE RESPONSE FOR CERTIFICATE OF CORRECTION

Paper No.: _____

DATE : **3-30-11**

TO SPE OF : ART UNIT **1721**

SUBJECT : Request for Certificate of Correction for Appl. No.: **12405710** Patent No.: **7883824**

Please respond to this request for a certificate of correction within 7 days.

FOR IFW FILES:

Please review the requested changes/corrections as shown in the **COCIN** document(s) in the IFW application image. No new matter should be introduced, nor should the scope or meaning of the claims be changed.

Please complete the response (see below) and forward the completed response to scanning using document code **COCX**.

FOR PAPER FILES:

Please review the requested changes/corrections as shown in the attached certificate of correction. Please complete this form (see below) and forward it with the file to:

Certificates of Correction Branch (C of C)
Randolph Square – 9D10-E
Palm Location 7580

Omega Lewis
Certificates of Correction Branch

703-756-1575

Thank You For Your Assistance

The request for issuing the above-identified correction(s) is hereby:
Note your decision on the appropriate box.

XX Approved	**All** changes apply.
❑ **Approved in Part**	Specify below which changes **do not** apply.
❑ **Denied**	State the reasons for denial below.

Comments: _____

_____

_____

_____

_____

/Mark F. Huff/ **1721**
SPE **Art Unit**

UNITED STATES PATENT AND TRADEMARK OFFICE

Commissioner for Patents
United States Patent and Trademark Office
P.O. Box 1450
Alexandria, VA 22313-1450
www.uspto.gov

TSIRCOU INTELLECTUAL PROPERTY LAW
655 Central Ave., 17th Floor
Glendale CA 91203

MAILED

MAR 25 2011

OFFICE OF PETITIONS

In re Application of :
Lee, et al. :
Application No. 12/405,798 : ON PETITION
Filed: March 17, 2009 :
Attorney Docket No. TES-00355

This is a decision on the petition under 37 CFR 1.181 filed on February 1, 2011, to withdraw the holding of abandonment in the above-cited application. This is also a decision on the petition under 37 CFR 1.137(b), filed in the alternative.

The petition under 37 CFR 1.181 is **DISMISSED**.

The petition under 37 CFR 1.137(b) is **GRANTED**.

The above-identified application was filed on March 17, 2009. On March 31, 2009, a Notice to File Missing Parts of Non-Provisional Application was mailed which set a shortened period for reply of two-months from its mailing date. The notice required an oath or declaration under 37 CFR 1.63, and payment of fees. A response was filed on September 30, 2009, with a request for an extension of time within the third month. A Notice of Abandonment was mailed on December 14, 2009.

Relative to the timely filing of a petition for a request for extension of time to reply to an Office action, it is noted that 37 CFR 1.136(a)(2) provides that:

> [t]he date on which the petition and the fee have been filed is the date for purposes of determining the period of extension and the corresponding amount of the fee. The expiration of the time period is determined by the amount of the fee paid. A reply must be filed prior to the expiration of the period of extension to avoid abandonment of the application (§ 1.135), but in no situation may an applicant reply later than the maximum time period set by statute, or be granted an extension of time under paragraph (b) of this section when the provisions of this paragraph are available. See § 1.304 for extensions of time to appeal to the U.S. Court of Appeals for the Federal Circuit or to commence a civil action; § 1.550(c) for extensions of time in ex parte reexamination proceedings, § 1.956 for extensions of time in inter partes reexamination proceedings; and §§ 41.4(a) and 41.121(a)(3) of this title for extensions of time in contested cases before the Board of Patent Appeals and Interferences.

Section 710.02(e) of the Manual of Patent Examining Procedure (MPEP) states, in pertinent part, that:

> Where a reply is filed after the set period for reply has expired and no petition or fee accompanies it, the reply will not be accepted as timely until the petition (which may be a constructive petition under 37 CFR 1.136(a)(3)) and the appropriate fee are submitted. For example, if an Office action sets a 3-month period for reply and applicant replies in the 4th month and includes only the petition for a 1-month extension of time, the reply is not acceptable until the fee is filed. If the fee is not filed until the 5th month, an additional fee for the 2nd month extension would also be required in order to render the reply timely

As applied to the facts as set forth in the instant petition, the aforementioned rule and section of the MPEP makes clear that although petitioner filed a response on September 30, 2009, petitioner was required to either file a request for an extension of time within the fourth month, or would have had to file a reply by August 31, 2009, using just the extension of time within the third month. Petitioner did not obtain a sufficient extension of time on September 30, 2009. Accordingly, the application became abandoned September 1, 2009—the date the extension of time within the third month expired. The petition under 37 CFR 1.181 is dismissed accordingly.

The petition under 37 CFR 1.137(b) is granted.

The application is being directed to the Office of Patent Application Processing for further review.

Telephone inquiries regarding this decision should be directed to the undersigned (571) 272-3222.

/Kenya A. McLaughlin/

Kenya A. McLaughlin
Petitions Attorney
Office of Petitions

UNITED STATES PATENT AND TRADEMARK OFFICE

Commissioner for Patents
United States Patent and Trademark Office
P.O. Box 1450
Alexandria, VA 22313-1450
www.uspto.gov

MAILED
APR 18 2011
OFFICE OF PETITIONS

Hovey Williams LLP
10801 Mastin Blvd., Suite 1000
Overland Park KS 66210

In re Application of :
Rick MCWILLIAMS :
Application No. 12/405,808 : DECISION ON PETITION
Filed: March 17, 2009 :
Attorney Docket No. 33068-CIP-DIV :

This is a decision on the petition, filed September 2, 2010, requesting that the requirement of a signature of an unavailable inventor on a declaration under 37 CFR 1.131 be waived.

The petition is **DISMISSED**.

Petitioner states that "[a]fter a diligent effort to contact and persuade him, the sole inventor, Rick McWilliams, was not persuaded to sign the Rule 131 Declaration".

As set forth in MPEP § 715.04, Where one or more of the named inventors of the subject matter of the rejected claim(s) (who had originally signed the oath or declaration for patent application under 37 CFR 1.63) is now unavailable to sign an affidavit or declaration under 37 CFR 1.131, the affidavit or declaration under 37 CFR 1.131 may be signed by the remaining joint inventors provided a petition under 37 CFR 1.183 requesting waiver of the signature of the unavailable inventor be submitted with the affidavit or declaration under 37 CFR 1.131. Proof that the non-signing inventor is unavailable or cannot be found similar to the proof required for a petition under 37 CFR 1.47 must be submitted with the petition under 37 CFR 1.183 (see MPEP § 409.03(d)).

In regard to the proof that the non-signing inventor is unavailable, required under 37 CFR 1.47, the applicable statute (35 U.S.C.§ 116) requires that a "diligent effort" have been expended in attempting to find or reach the non-signing inventor. ***See* MPEP 409.03(a)**. The showing currently fails to demonstrate, with a documented showing, that a diligent effort was made to find or locate non-signing inventor Rick McWilliams. Where inability to find or locate a named inventor(s) is alleged, a statement of facts should be submitted that fully describes the exact facts which are relied on to establish that a *diligent effort* was made to locate the inventor.

Petitioner has not demonstrated that all efforts were expended in trying to locate non-signing inventor Rick McWilliams. In this regard, petitioner should, at the very least, mail correspondence to the inventor's last known address, return receipt and/or forwarding address requested. If a forwarding address is provided, petitioner should then mail a complete copy of the application papers (specification, claims, drawings, oath, etc.) to Rick McWilliams's address, return receipt requested, along with a cover letter of instructions which includes a deadline or a statement that no response will constitute a refusal. This sort of ultimatum lends support to a finding of refusal by conduct. If the papers are returned and all other attempts to locate or reach the inventor, e.g., through personnel records, co-workers, E-mail, the Internet or the telephone, etc., continue to fail, then applicant will have established that the inventor cannot be reached after diligent effort or has refused to join in the application. **The statements of facts must be signed, where at all possible, by a person having firsthand knowledge of the facts recited therein and should be accompanied by documentary evidence in support of the statement of facts.** It is important that the forthcoming communication contain statements of fact as opposed to conclusions.

Where there is an express or oral refusal, that fact, along with the time and place of the refusal, must be stated in an affidavit or declaration by the party to whom the refusal was made. Where there is a written refusal, a copy of the document(s) evidencing that refusal must be made part of the affidavit or declaration.

When it is concluded by the applicant that an omitted inventor's conduct constitutes a refusal, all facts upon which that conclusion is based should be stated in an affidavit or declaration. If there is documentary evidence to support facts alleged in the affidavit or declaration, such evidence must be submitted.

Whenever an omitted inventor **gives a reason for refusing to sign the application oath or declaration**, that reason should be stated in the affidavit or declaration.

37 CFR 1.183 states that only in an extraordinary situation, when justice requires, any requirement of the regulations in this part which is not a requirement of the statutes may be suspended or waived by the Director or the Director's designee, *sua sponte,* or on petition of the interested party, subject to such other requirements as may be imposed. For reasons set forth above, petitioner, has not, however, shown an extraordinary circumstance where justice requires suspension of the rules. The instant petition is therefore **DISMISSED**.

Further correspondence with respect to this matter should be addressed as follows:

By mail: Mail Stop PETITIONS

Commissioner for Patents
Post Office Box 1450
Alexandria, VA 22313-1450

By hand: Customer Service Window
Mail Stop Petitions
Randolph Building
401 Dulany Street
Alexandria, VA 22314

By fax: (571) 273-8300
ATTN: Office of Petitions

Any questions concerning this decision may be directed to the undersigned at (571) 272-4914.

Ramesh Krishnamurthy
Petitions Examiner
Office of Petitions

UNITED STATES PATENT AND TRADEMARK OFFICE

UNITED STATES DEPARTMENT OF COMMERCE
United States Patent and Trademark Office
Address: COMMISSIONER FOR PATENTS
P.O. Box 1450
Alexandria, Virginia 22313-1450
www.uspto.gov

APPLICATION NO.	FILING DATE	FIRST NAMED INVENTOR	ATTORNEY DOCKET NO.	CONFIRMATION NO.
12/405,830	03/17/2009	Mitsuhiko SERIZAWA	Q112514	4291

7590 11/23/2010

SUGHRUE MION, PLLC
2100 PENNSYLVANIA AVENUE, N.W.
SUITE 800
WASHINGTON, DC 20037

EXAMINER	
CHAUDHRY, SAEED T	
ART UNIT	**PAPER NUMBER**
1711	
NOTIFICATION DATE	**DELIVERY MODE**
11/23/2010	ELECTRONIC

DECISION GRANTING PETITION UNDER 37 CFR 1.138(d)

The declaration of express abandonment is recognized

This is in response to the petition under 37 CFR 1.138(d), requesting for a refund of any previously paid search fee and excess claims fee in the above-identified application.

The petition is granted.

The express abandonment is recognized. Any previously paid search fee and excess claims fee are hereby refunded.

Telephone inquiries should be directed to the Office of Data Management at (571) 272-4200.

Patent Publication Branch
Office of Data Management

FORM PET651G (Rev. 08/07)

UNITED STATES PATENT AND TRADEMARK OFFICE

Commissioner for Patents
United States Patent and Trademark Office
P.O. Box 1450
Alexandria, VA 22313-1450
www.uspto.gov

STERNE, KESSLER, GOLDSTEIN & FOX P.L.L.C.
1100 NEW YORK AVENUE, N.W.
WASHINGTON DC 20005

MAILED
JUN 15 2011
OFFICE OF PETITIONS

In re Patent of Herpen et al.	:	
Patent No. 7,928,412	:	
Issue Date: April 19, 2011	:	Letter
Application No. 12/405,831	:	
Filing Date: March 17, 2009	:	
Attorney Docket No. 1857.8190001	:	

This is a letter in response to the request under 37 CFR 3.81(b) filed May 25, 2011.

The request under 37 CFR 3.81 is **GRANTED**.

37 CFR 3.81(b) states,

> Any request for issuance of an application in the name of the assignee submitted after the date of payment of the issue fee, and any request for a patent to be corrected to state the name of the assignee, must state that the assignment was submitted for recordation as set forth in § 3.11 before issuance of the patent, and must include a request for a certificate of correction under § 1.323 of this chapter (accompanied by the fee set forth in § 1.20(a)) and the processing fee set forth in § 1.17(i) of this chapter.

The request satisfies the requirements set forth in 37 CFR 3.81(b). Therefore, the request has been granted.

Certificates of Correction Branch ("COCB") will be informed of the instant decision. Thereafter, COCB will review the propriety of the portion of the requested certificate of correction changing the spelling of an inventor's name. If COCB determines issuance of a certificate of correction to correct the inventor's name is appropriate, the requested certificate of correction will be issued in due course.

Telephone inquiries regarding this communication should be directed to Petitions Attorney Steven Brantley at (571) 272-3203.

Charles Steven Brantley
Senior Petitions Attorney
Office of Petitions

UNITED STATES PATENT AND TRADEMARK OFFICE

UNITED STATES DEPARTMENT OF COMMERCE
United States Patent and Trademark Office
Address: COMMISSIONER FOR PATENTS
P.O. Box 1450
Alexandria, Virginia 22313-1450
www.uspto.gov

APPLICATION NO.	FILING DATE	FIRST NAMED INVENTOR	ATTORNEY DOCKET NO.	CONFIRMATION NO.
12/405,863	03/17/2009	Yasunori Taguchi	338651US2RD DIV	4362

7590 10/12/2010

OBLON, SPIVAK, MCCLELLAND MAIER & NEUSTADT, L.L.P.
1940 DUKE STREET
ALEXANDRIA, VA 22314

EXAMINER	
YE, LIN	

ART UNIT	PAPER NUMBER
2622	

NOTIFICATION DATE	DELIVERY MODE
10/12/2010	ELECTRONIC

DECISION GRANTING PETITION UNDER 37 CFR 1.138(d)

The declaration of express abandonment is recognized

This is in response to the petition under 37 CFR 1.138(d), requesting for a refund of any previously paid search fee and excess claims fee in the above-identified application.

The petition is granted.

The express abandonment is recognized. Any previously paid search fee and excess claims fee are hereby refunded.

Telephone inquiries should be directed to the Office of Data Management at (571) 272-4200.

Nimi Jarmes

Patent Publication Branch
Office of Data Management

FORM PET651G (Rev. 08/07)

UNITED STATES PATENT AND TRADEMARK OFFICE

Commissioner for Patents
United States Patent and Trademark Office
P.O. Box 1450
Alexandria, VA 22313-1450
www.uspto.gov

MEDLEN & CARROLL LLP
703 MARKET STREET
SUITE 340
SAN FRANCISCO CA 94103

MAILED
FEB 10 2012
OFFICE OF PETITIONS

In re Application of :
Olejnik, et al. :
Application No. 12/405,866 : ON PETITION
Filed: March 17, 2009 :
Attorney Docket No. INTELLI-13891 :

This is a decision on the petition to revive under 37 CFR 1.137(b), filed January 23, 2012.

The petition under 37 CFR 1.137(b) is **GRANTED**.

The above application became abandoned for failure to timely file a reply to the non-final Office action mailed June 8, 2011. This Office set a shortened statutory period for reply of three months. No reply having been received, the application became abandoned on September 9, 2011. The Office mailed a Notice of Abandonment on January 10, 2012.

With the instant petition, petitioner has made the proper statement of unintentional delay, paid the petition fee, and submitted the required reply in the form of an Amendment.

Pursuant to 37 CFR 1.136, an extension of time must be filed prior to the expiration of the maximum period obtainable for reply to avoid abandonment. Accordingly, since the $635 extension of time fee submitted with the petition on January 23, 2012 was subsequent to the maximum period obtainable for reply (December 8, 2011), this fee has been refunded to petitioner's Deposit Account No. 08-1290.

The application is being forwarded to Group Art Unit 1637 for consideration of the Amendment, filed January 23, 2012.

Telephone inquiries related to this decision should be directed to the undersigned at (571)272-3207.

Cliff Congo
Petitions Attorney
Office of Petitions

SPE RESPONSE FOR CERTIFICATE OF CORRECTION

Paper No.:20101103

DATE : November 3, 2010

TO SPE OF : ART UNIT 2816

SUBJECT : Request for Certificate of Correction on Patent No.: 7,813,466

A response is requested with respect to the accompanying request for a certificate of correction.

Please complete this form and return with file, within **7** days to:
Certificates of Correction Branch - PK 3-910
Palm location **7590** - Tel. No. 305-8201

With respect to the change(s) requested, correcting Office and/or Applicant's errors, should the patent read as shown in the certificate of correction? No new matter should be introduced, nor should the scope or meaning of the claims be changed.

Thank You For Your Assistance **Certificates of Correction Branch**

The request for issuing the above-identified correction(s) is hereby:
Note your decision on the appropriate box.

☒ **Approved** **All** changes apply.

☐ **Approved in Part** Specify below which changes **do not** apply.

☐ **Denied** State the reasons for denial below.

Comments:

SPE: /Lincoln Donovan/ **Art Unit** 2816

UNITED STATES PATENT AND TRADEMARK OFFICE

Commissioner for Patents
United States Patent and Trademark Office
P.O. Box 1450

MAILED

JUN 29 2011

OFFICE OF PETITIONS

WILSON DANIEL SWAYZE, JR.
3804 CLEARWATER CT.
PLANO TX 75025

In re Application of :
Kevin LE et al. : ON PETITION
Application No. 12/405,938 :
Filed: March 17, 2009 :
Atty. Docket No.: WDS-4860 :

This is a decision on the petition under 37 CFR 1.137(b), filed May 28, 2011, to revive the above-identified application.

The petition is **GRANTED**.

The petition was held abandoned for failure to reply in a timely manner to the Notice to File Missing Parts mailed April 1, 2009, which set a shortened period for reply of two (2) months. No reply was sent, and no extensions of time under the provisions of 37 CFR 1.136(a) were obtained. The application became abandoned on June 2, 2009. A Notice of Abandonment was mailed December 8, 2009.

The petition satisfies the conditions for revival pursuant to 37 CFR 1.137(b) by including (1) a reply in the form of a Response to the Notice mailed April 1, 2009, (2) a petition fee of $810, and (3) a statement of unintentional delay. The reply to the Notice is accepted as having been unintentionally delayed.

Telephone inquires regarding this decision should be directed to Robert DeWitty, Petitions Attorney, Office of Petitions (571-272-8427).

The application file will be referred to Office of Patent Application Processing for further processing.

Anthony Knight
Director
Office of Petitions

UNITED STATES PATENT AND TRADEMARK OFFICE

Commissioner for Patents
United States Patent and Trademark Office
P.O. Box 1450
Alexandria, VA 22313-1450
www.uspto.gov

SPRINKLE IP LAW GROUP
1301 W. 25TH STREET
SUITE 408
AUSTIN, TX 78705

MAILED

JUN 30 2011

OFFICE OF PETITIONS

In re Patent No. 7,966,398	:	
Issued : June 21, 2011	:	DECISION ON PETITION
Application No. 12/405,939	:	TO WITHDRAW
Filed: March 17, 2009	:	FROM RECORD
Attorney Docket No. 0081-087002	:	

This is a decision on the Request to Withdraw as attorney or agent of record under 37 C.F.R. § 1.36(b), filed May 20, 2011.

The request is **DISMISSED** as involving a moot issue.

A review of the file record indicates that the power of attorney to the attorneys/agents associated with Customer Number 44654 was revoked by the assignee of the patent application on May 13, 2011. Accordingly, the request to withdraw under 37 C.F.R. § 1.36(b) is moot.

All future communications from the Office will be directed to the below-listed address until otherwise properly notified.

Telephone inquires concerning this decision should be directed to the undersigned at 571-272-3206. All other inquires concerning either the examination or status of the application should be directed to the Technology Center.

/Liana Walsh/
Liana Walsh
Petitions Examiner
Office of Petitions

cc: BRAKE HUGHES BELLERMANN LLP
C/O CPA GLOBAL
P.O. BOX 52050
MINNEAPOLIS MN 55402

UNITED STATES PATENT AND TRADEMARK OFFICE

Commissioner for Patents
United States Patent and Trademark Office
P.O. Box 1450
Alexandria, VA 22313-1450
www.uspto.gov

MAILED

AUG 10 2010

OFFICE OF PETITIONS

LAW OFFICE OF KHALILIAN SIRA, LLC
9100 PERSIMMON TREE ROAD
POTOMAC, MD 20854

In re Application of :
Michael Bukrinsky et al :
Application No. 12/405,948 : DECISION ON PETITION
Filed: March 17, 2009 : UNDER 37 CFR 1.78(a)(6)
Attorney Docket No. 21298-401 :

This is a decision on the petition filed December 9, 2009, which is being treated as a petition under 37 CFR 1.78(a)(6), to accept an unintentionally delayed claim under 35 U.S.C. § 119(e) for the benefit of priority to a prior-filed provisional application.

The petition is **DISMISSED.**

A petition under 37 CFR 1.78(a)(6) is only applicable to those applications filed on or after November 29, 2000. Further, the petition is appropriate only after expiration of the period specified in 37 CFR 1.78(a)(5)(ii) and must be filed during the pendency of the nonprovisional application. In addition, the petition must be accompanied by:

(1) the reference required by 35 U.S.C. § 119(e) and 37 CFR 1.78(a)(5)(i) to the prior-filed application, unless previously submitted;
(2) the surcharge set forth in § 1.17(t); and
(3) a statement that the entire delay between the date the claim was due under 37 CFR 1.78(a)(5)(ii) and the date the claim was filed was unintentional. The Director may require additional information where there is a question whether the delay was unintentional.

The amendment as drafted is unacceptable and, therefore, is not considered a proper reference under 37 CFR 1.78(a)(2)(i). In this regard, the amendment is physically part of the petition and, as such, does not comply with 37 CFR 1.121, 1.52, or 1.4(c). Note that 37 CFR 1.121 states that amendments are made by filing a paper, in compliance with § 1.52, directing that specified amendments be made. The pertinent section of 37 CFR 1.52 states that the claim (in this case, the claim for priority), must commence on a separate physical sheet. 37 CFR 1.4(c) states that each distinct subject must be contained in a separate paper since different matters may be considered by different branches of the United States Patent and Trademark Office.

The petition fee of $1410 has not been received. This petition can not be treated until the petition fee is received.

Before the petition can be granted, petitioner must submit an amendment in compliance with the aforementioned rules, the petition fee of $1410, along with a renewed petition under 37 CFR 1.78(a)(6).[1]

Further correspondence with respect to this matter should be addressed as follows:

By mail:	Mail Stop PETITIONS Commissioner for Patents Post Office Box 1450 Alexandria, VA 22313-1450
By hand:	Customer Service Window Mail Stop Petitions Randolph Building 401 Dulany Street Alexandria, VA 22314
By fax:	(571) 273-8300 ATTN: Office of Petitions

Any questions concerning this matter may be directed to Irvin Dingle at (571) 272-3210.

David Bucci
Petitions Examiner
Office of Petitions

[1] The claim for priority may also be made in an Application Data Sheet in compliance with 37 CFR 1.121 and 37 CFR 1.76(b)(5).

UNITED STATES PATENT AND TRADEMARK OFFICE

Commissioner for Patents
United States Patent and Trademark Office
P.O. Box 1450
Alexandria, VA 22313-1450
www.uspto.gov

FENWICK & WEST LLP
SILICON VALLEY CENTER
801 CALIFORNIA STREET
MOUNTAIN VIEW, CA 94041

MAILED
MAR 05 2012
OFFICE OF PETITIONS

In re Application of :
Dan Kikinis, et al. :
Application No. 12/405,957 : DECISION ON PETITION
Filed: March 17, 2009 : TO WITHDRAW
Attorney Docket No. 26989-15335 : FROM RECORD
:

This is a decision on the Request to Withdraw as attorney or agent of record under 37 C.F.R. § 1.36(b), filed February 13, 2012.

The request is **NOT APPROVED.**

A grantable request to withdraw as attorney/agent of record must be signed by every attorney/agent seeking to withdraw or contain a clear indication that one attorney is signing on behalf of another/others.

Petitioner should note that the Office will no longer accept address changes to a new practitioner of law firm filed with a Request, absent the filing of a power of attorney to the new representative. The Office will either change the correspondence address of record to the most current address information provided for the assignee of the entire interest who properly became of record under 37 CFR 3.71 or, the most current address information provided for the first named inventor.

In order to request or take action in a patent matter, the assignee must establish its ownership of the patent to the satisfaction of the Director. In this regard, a Statement under 37 CFR 3.73(b) must have either: (i) documentary evidence of a chain of title from the original owner to the assignee (*e.g.*, copy of an executed assignment), and a statement affirming that the documentary evidence of the chain of title from the original owner to the assignee was or concurrently is being submitted for recordation pursuant to § 3.11; or (ii) a statement specifying where documentary evidence of a chain of title from the original owner to the assignee is recorded in the assignment records of the Office (*e.g.*, reel and frame number).

Accordingly, since the request to withdraw from record does not include an acceptable current correspondence address for future communications from the Office, the request cannot be granted at the present time.

All future communications from the Office will continue to be directed to the address of record until otherwise notified by applicant.

Telephone inquiries concerning this decision should be directed to undersigned at 571-272-1642. All other inquiries concerning the examination or status of this application should be directed to the Technology Center.

/AMW/
April M. Wise
Petitions Examiner
Office of Petitions

cc: MIKE RICKS
8639 GOLD PEAK PLACE
UNIT B
HIGHLANDS RANCH, CO 80130

UNITED STATES PATENT AND TRADEMARK OFFICE

Commissioner for Patents
United States Patent and Trademark Office
P.O. Box 1450
Alexandria, VA 22313-1450
www.uspto.gov

FENWICK & WEST LLP
SILICON VALLEY CENTER
801 CALIFORNIA STREET
MOUNTAIN VIEW, CA 94041

MAILED

APR 10 2012

OFFICE OF PETITIONS

In re Application of :
Dan Kikinis, et al. :
Application No. 12/405,957 : DECISION ON PETITION
Filed: March 17, 2009 : TO WITHDRAW
Attorney Docket No. 26989-15335 : FROM RECORD
:

This is a decision on the renewed Request to Withdraw as attorney or agent of record under 37 C.F.R. § 1.36(b), filed March 12, 2012.

The request is **NOT APPROVED**.

A grantable request to withdraw as attorney/agent of record must be signed by every attorney/agent seeking to withdraw or contain a clear indication that one attorney is signing on behalf of another/others.

Petitioner should not that the Office will no longer accept address changes to a new practitioner of a law firm file with a Request to Withdraw, absent the filing of a power of attorney to the new representative. The Office will either change the correspondence address of record to the most current address information provided for the assignee of the entire interest who properly became of record under 37 CFR 3.71 or, the most current address information provided for the first named inventor.

Accordingly, the request to withdraw from record does not include an acceptable current correspondence address for future communications from the Office.

In order to request or take action in a patent matter, the assignee must establish its ownership of the patent to the satisfaction of the Director. In this regard, a Statement under 37 CFR 3.73(b) must have either: (i) documentary evidence of a chain of title from the original owner to the assignee (e.g., copy of an executed assignment), and a statement affirming that the documentary evidence of the chain of title from the original owner to the assignee was or concurrently is being submitted for recordation pursuant to § 3.11; or (ii) a statement specifying where documentary evidence of a chain of title from the original owner to the assignee is recorded in the assignment

records of the Office (e.g., reel and frame number). The power of attorney filed March 17, 2009 did not include a copy of the assignment or a statement under 37 CFR 3.73(b).

All future communications from the Office will continue to be directed to the above-listed address until otherwise notified by applicant.

Telephone inquiries concerning this decision should be directed to undersigned at 571-272-1642. All other inquiries concerning the examination or status of this application should be directed to the Technology Center.

/AMW/
April M. Wise
Petitions Examiner
Office of Petitions

cc: INVISM, INC
8639 GOLD PEAK PLACE
UNIT B
HIGHLAND RANCH, CO 80130

UNITED STATES PATENT AND TRADEMARK OFFICE

Commissioner for Patents
United States Patent and Trademark Office
P.O. Box 1450
Alexandria, VA 22313-1450
www.uspto.gov

FENWICK & WEST LLP
SILICON VALLEY CENTER
801 CALIFORNIA STREET
MOUNTAIN VIEW CA 94041

MAILED

FEB 29 2012

OFFICE OF PETITIONS

In re Application of	:	
Kikinis et al.	:	DECISION ON PETITION
Application No. 12/405,959	:	TO WITHDRAW
Filed: March 17, 2009	:	FROM RECORD
Attorney Docket No. 26989-15336	:	

This is a decision on the Request to Withdraw as attorney or agent of record under 37 C.F.R. § 1.36(b), filed February 13, 2012.

The request is **NOT APPROVED**.

The Office will only accept correspondence address changes to the most current address information provided for the assignee of the entire interest *who properly became of record under 37 CFR 3.71,* or, if no assignee of the entire interest has properly been made of record, the most current address information provided for the *first named inventor.*

The instant Request to Withdraw lists "Mike Ricks" as the Inventor or Assignee name in the change of correspondence section of the form. However, according to USPTO records, it does appear that Mike Ricks is either the assignee of the entire interest of the first named inventor of this application. Accordingly, the request cannot be granted at this time.

All future communications from the Office will be directed to above-listed address until otherwise properly notified by the applicant or a proper change of correspondence address have been submitted.

There is an outstanding Office action mailed December 5, 2011 that requires a reply.

Telephone inquires concerning this decision should be directed to the undersigned at (571) 272-3206. All other inquires concerning either the examination or status of the application should be directed to the Technology Center.

/Liana Walsh/
Liana Walsh
Petitions Examiner
Office of Petitions

UNITED STATES PATENT AND TRADEMARK OFFICE

Commissioner for Patents
United States Patent and Trademark Office
P.O. Box 1450
Alexandria, VA 22313-1450
www.uspto.gov

FENWICK & WEST LLP
SILICON VALLEY CENTER
801 CALIFORNIA STREET
MOUNTAIN VIEW CA 94041

MAILED
MAR 23 2012
OFFICE OF PETITIONS

In re Application of	:	
Kikinis et al.	:	DECISION ON PETITION
Application No. 12/405,959	:	TO WITHDRAW
Filed: March 17, 2009	:	FROM RECORD
Attorney Docket No. 26989-15336	:	

This is a decision on the second Request to Withdraw as attorney or agent of record under 37 C.F.R. § 1.36(b), filed March 12, 2012.

The request is **APPROVED**.

A grantable request to withdraw as attorney/agent of record must be signed by every attorney/agent seeking to withdraw or contain a clear indication that one attorney is signing on behalf of another/others. The Office will require the practitioner(s) to certify that he, she or they have: (1) given reasonable notice to the client, prior to the expiration of the reply period, which the practitioner(s) intends to withdraw from employment; (2) delivered to the client or a duly authorized representative of the client all papers and property (including funds) to which the client is entitled; and (3) notified the client of any replies that may be due and the time frame within which the client must respond, pursuant to 37 CFR 10.40 (c).

The request was signed by Fengling Li on behalf of all attorneys/agents of record who are associated with Customer Number 00758. All attorneys/agents associated with Customer Number 00758 have been withdrawn. Applicants are reminded that there is no attorney of record at this time.

All future correspondence will be directed to the assignee, Invism, Inc., at the address indicated below.

Telephone inquires concerning this decision should be directed to the undersigned at (571) 272-3206. All other inquires concerning either the examination or status of the application should be directed to the Technology Center.

/Liana Walsh/
Liana Walsh
Petitions Examiner
Office of Petitions

cc: INVISM, INC.
8639 GOLD PEAK PLACE, UNIT B
HIGHLANDS RANCH, CO 80130

UNITED STATES PATENT AND TRADEMARK OFFICE

Commissioner for Patents
United States Patent and Trademark Office
P.O. Box 1450
Alexandria, VA 22313-1450
www.uspto.gov

Fenwick & West, LLP
Silicon Valley Center
801 California Street
Mountain View, CA 94041

MAILED

OCT 14 2010

OFFICE OF PETITIONS

In re Application of :
Anilkumar Dominic :
Application No. 12/405,967 : DECISION ON PETITION
Filed: March 17, 2009 : TO WITHDRAW
Attorney Docket No. 23951-15397 : FROM RECORD
:

This is a decision on the Request to Withdraw as attorney or agent of record under 37 C.F.R. § 1.36(b), filed August 18, 2010.

The request is **moot because a revocation of power of attorney has been filed.**

A review of the file record indicates that the power of attorney to Rajiv P. Patel and all attorneys/agents of record has been revoked by the inventor of the patent application on September 14, 2010. Accordingly, the request to withdraw under 37 C.F.R. § 1.36(b) is moot.

All future communications from the Office will continue to be directed to the below-listed address until otherwise notified by applicant.

Telephone inquires concerning this decision should be directed to Kimberly Inabinet at 571-272-4618.

/Kimberly Inabinet/

Kimberly Inabinet
Petitions Examiner
Office of Petitions

cc: Anilkumar Dominic
5240 Arno Court
San Jose, CA 95138

UNITED STATES PATENT AND TRADEMARK OFFICE

Commissioner for Patents
United States Patent and Trademark Office
P.O. Box 1450
Alexandria, VA 22313-1450
www.uspto.gov

CRAIG W. RODDY
HALLIBURTON ENERGY SERVICES
P.O. BOX 1431
DUNCAN OK 73536-0440

MAILED

OCT 01 2010

OFFICE OF PETITIONS

In re Application of	:	
Keys et al	:	
Application No. 12/406,110	:	DECISION GRANTING PETITION
Filed: March 17, 2009	:	UNDER 37 CFR 1.313(c)(2)
Attorney Docket No. HES 2008-IP-016848U1	:	

This is a decision on the petition under 37 CFR 1.313(c)(2), filed September 29, 2010, to withdraw the above-identified application from issue after payment of the issue fee.

The petition is **GRANTED**.

The above-identified application is withdrawn from issue for consideration of a submission under 37 CFR 1.114 (request for continued examination). *See* 37 CFR 1.313(c)(2).

Petitioner is advised that the issue fee paid on September 8, 2010 cannot be refunded. If, however, this application is again allowed, petitioner may request that it be applied towards the issue fee required by the new Notice of Allowance.[1]

The petition is not signed by an attorney of record. Nevertheless, in accordance with 37 CFR 1.34, the signature of Mr. Rodney B. Carroll appearing on the correspondence shall constitute a representation to the United States Patent and Trademark Office that he is authorized to represent the particular party on whose behalf he acts. If Mr. Carroll desires to receive future correspondence regarding this file, the appropriate power of attorney documents must be submitted. A courtesy copy of this decision is being mailed to petitioner herein. However, until otherwise instructed, all future correspondence regarding this application file will be directed solely to the above-noted correspondence address of record.

Telephone inquiries should be directed to the undersigned at (571) 272-3208.

---

[1] *The request to apply the issue fee to the new Notice may be satisfied by completing and returning the new Part B – Fee(s) Transmittal Form (along with any balance due at the time of submission). Petitioner is advised that the Issue Fee Transmittal Form must be completed and timely submitted to avoid abandonment of the application.*

This application is being referred to Technology Center AU 1796 for processing of the request for continued examination under 37 CFR 1.114 and for consideration of the concurrently filed amendment.

/Karen Creasy/
Karen Creasy
Petitions Examiner
Office of Petitions

Cc:

CONLEY ROSE, P.C.
5601 GRANITE PARKWAY, SUITE 750
PLANO, TEXAS 75024

UNITED STATES PATENT AND TRADEMARK OFFICE

UNITED STATES DEPARTMENT OF COMMERCE
United States Patent and Trademark Office
Address: COMMISSIONER FOR PATENTS
P.O. Box 1450
Alexandria, Virginia 22313-1450
www.uspto.gov

APPLICATION NO.	FILING DATE	FIRST NAMED INVENTOR	ATTORNEY DOCKET NO.	CONFIRMATION NO.
12/406,133	03/18/2009	DANIEL K. VETTERS	LWA-10618 (50373US)	4860

79289 7590 01/13/2011

Meiers Law Office
7245 Sawmill Run
Holland, OH 43528

EXAMINER	
LOOK, EDWARD K	
ART UNIT	PAPER NUMBER
3745	

NOTIFICATION DATE	DELIVERY MODE
01/13/2011	ELECTRONIC

Please find below and/or attached an Office communication concerning this application or proceeding.

The time period for reply, if any, is set in the attached communication.

Notice of the Office communication was sent electronically on above-indicated "Notification Date" to the following e-mail address(es):

rm@ipatt.com
ipatt@hotmail.com

UNITED STATES DEPARTMENT OF COMMERCE
U.S. Patent and Trademark Office
Address: COMMISSIONER FOR PATENTS
P.O. Box 1450
Alexandria, Virginia 22313-1450

APPLICATION NO./ CONTROL NO.	FILING DATE	FIRST NAMED INVENTOR / PATENT IN REEXAMINATION	ATTORNEY DOCKET NO.
12406133	3/18/09	VETTERS ET AL.	LWA-10618 (50373US)

Meiers Law Office
7245 Sawmill Run
Holland, OH 43528

EXAMINER
EDWARD LOOK

ART UNIT	PAPER
3745	20110110

DATE MAILED:

Please find below and/or attached an Office communication concerning this application or proceeding.

Commissioner for Patents

DECISION ON REQUEST UNDER 37 CFR §1.48(a)

This is a response to the request filed April 8, 2009 requesting that the inventorship in application Serial No. 12/406,133 be corrected under 37 CFR §1.48(a) to add Kenneth John Mackie and David Michael Beaven as inventors of the claimed subject matter.

The required submissions which include:

1. a request to correct the inventorship that sets forth the desired inventorship change;
2. a statement from each person being added as an inventor and from each person being deleted as an inventor that the error in inventorship occurred without deceptive intention on his or her part;
3. an oath or declaration by the actual inventor or inventors as required by § 1.63 or as permitted by §§ 1.42, 1.43 or §1.47;
4. the processing fee set forth in 37 CFR §1.17(i); and
5. the written consent of the assignee if an assignment has been executed by any of the original named inventors.

have been provided.

The request is APPROVED.

/Edward K. Look/
Supervisory Patent Examiner, Art Unit 3745

UNITED STATES PATENT AND TRADEMARK OFFICE

UNITED STATES DEPARTMENT OF COMMERCE
United States Patent and Trademark Office
Address: COMMISSIONER FOR PATENTS
P.O. Box 1450
Alexandria, Virginia 22313-1450
www.uspto.gov

APPLICATION NO.	FILING DATE	FIRST NAMED INVENTOR	ATTORNEY DOCKET NO.	CONFIRMATION NO.
12/406,226	03/18/2009	Thomas Ivo Franciscus Hubert Cremers	27507-0026004	5015

7590 09/20/2010

FISH & RICHARDSON P.C.
P.O. BOX 1022
MINNEAPOLIS, MN 55440-1022

EXAMINER	
ORWIG, KEVIN S	

ART UNIT	PAPER NUMBER
1611	

NOTIFICATION DATE	DELIVERY MODE
09/20/2010	ELECTRONIC

DECISION GRANTING PETITION UNDER 37 CFR 1.138(d)

The declaration of express abandonment is recognized

This is in response to the petition under 37 CFR 1.138(d), requesting for a refund of any previously paid search fee and excess claims fee in the above-identified application.

The petition is granted.

The express abandonment is recognized. Any previously paid search fee and excess claims fee are hereby refunded.

Telephone inquiries should be directed to the Office of Data Management at (571) 272-4200.

Patent Publication Branch
Office of Data Management

UNITED STATES PATENT AND TRADEMARK OFFICE

Commissioner for Patents
United States Patent and Trademark Office
P.O. Box 1450
Alexandria, VA 22313-1450
www.uspto.gov

THE DOW CHEMICAL COMPANY
P.O. BOX 1967
2040 DOW CENTER
MIDLAND MI 48641

MAILED
SEP 12 2011
OFFICE OF PETITIONS

In re Application of	:	
KARJALA, et al	:	
Application No. 12/406,227	:	DECISION ON PETITION
Filed: March 18, 2009	:	
Attorney Docket No. 63446B US DIV	:	

This is a decision on the petition under the unintentional provisions of 37 CFR 1.137(b), filed August 22, 2011, to revive the above-identified application.

The petition is **GRANTED**.

The application became abandoned for failure to timely pay the issue and publication fees on or before July 22, 2011, as required by the Notice of Allowance and Fee(s) Due, mailed April 22, 2011, which set a statutory period for reply of three (3) months. Accordingly, the application became abandoned on July 23, 2011. A Notice of Abandonment was mailed August 9, 2011.

The petition satisfies the requirements of 37 CFR 1.137(b) in that petitioner has supplied (1) the reply in the form of payment of the issue fee of $1510 and the publication fee of $300; (2) the petition fee of $1620; and (3) the required statement of unintentional delay.

Since the issue fee must be paid as a condition for revival, the issue and publication fees will be charged to Deposit Account No. 04-1512, as authorized.

The Request for Continued Examination (RCE) filed with the petition dated August 22, 2011, is acknowledged.

There is no indication that the person signing the petition was ever given a power of attorney to prosecute the application. If the person signing the petition desires to receive future correspondence regarding this application, the appropriate power of attorney document must be submitted.

Telephone inquiries concerning this decision should be directed to the undersigned at (571) 272-6735.

All other inquiries should be directed to the Technology Center at (571) 272-1700.

The application is being referred to Technology Center Art Unit 1765 for processing of the RCE.

/Diane C. Goodwyn/
Diane C. Goodwyn
Petitions Examiner
Office of Petitions

UNITED STATES PATENT AND TRADEMARK OFFICE

Commissioner for Patents
United States Patent and Trademark Office
P.O. Box 1450
Alexandria, VA 22313-1450
www.uspto.gov

BANNER & WITCOFF, LTD.
ATTORNEYS FOR CLIENT NO. 016689
1100 13th STREET NW, SUITE 1200
WASHINGTON, DC 20005-4051

MAILED

DEC 28 2010

OFFICE OF PETITIONS

In re Application of :
Takuro KUSAMA :
Application No. 12/406,242 : DECISION GRANTING PETITION
Filed: March 18, 2009 : UNDER 37 CFR 1.313(c)(2)
Attorney Docket No. **006777.00309** :

This is a decision on the petition under 37 CFR 1.313(c)(2), filed December 27, 2010, to withdraw the above-identified application from issue after payment of the issue fee.

The petition is **GRANTED**.

The above-identified application is withdrawn from issue for consideration of a submission under 37 CFR 1.114 (request for continued examination). *See* 37 CFR 1.313(c)(2).

Petitioner is advised that the issue fee paid on November 23, 2010 cannot be refunded. If, however, this application is again allowed, petitioner may request that it be applied towards the issue fee required by the new Notice of Allowance.[1]

Telephone inquiries should be directed to the undersigned at (571) 272-7253.

This application is being referred to Technology Center AU 3653 for processing of the request for continued examination under 37 CFR 1.114 and for consideration of the concurrently filed information disclosure statement.

/Monica A. Graves/
Petitions Examiner, Office of Petitions

[1] *The request to apply the issue fee to the new Notice may be satisfied by completing and returning the new Part B – Fee(s) Transmittal Form (along with any balance due at the time of submission). Petitioner is advised that the Issue Fee Transmittal Form* ***must*** *be completed and timely submitted to avoid abandonment of the application.*

UNITED STATES PATENT AND TRADEMARK OFFICE

Commissioner for Patents
United States Patent and Trademark Office
P.O. Box 1450
Alexandria, VA 22313-1450
www.uspto.gov

MAILED

DEC 14 2010

OFFICE OF PETITIONS

YOUNG & THOMPSON
209 MADISON STREET
SUITE 500
ALEXANDRIA VA 22314

In re Application of
Phillipe Bouyer et al.
Application No. 12/406,276
Filed: March 18, 2009
Attorney Docket No. 0510-1218

ON PETITION

This is a decision regarding your request under 37 CFR 1.28. for acceptance of a fee deficiency submission and loss of small entity status filed November 30, 2010.

On September 1, 1998, the Court of Appeals for the Federal Circuit held that 37 CFR 1.28(c) is the sole provision governing the time for correction of the erroneous payment of the issue fee as a small entity. See DH Technology v. Synergystex International, Inc.. 154 F.33d 1333, 47 USPQ2d 1865 (Fed. Cir. Sept. 1, 1998).

The Office no longer investigates or rejects original or reissue applications under 37 CFR 1.56. 1098 Off. Gaz. Pat. Office 502 (January 3, 1989). Therefore nothing in this Notice is intended to imply that an investigation was done.

Your fee deficiency submission in the amount of $693, under 37 CFR 1.28, is hereby accepted and the petition is **GRANTED**. Status as a small entity has also been removed.

Inquiries related to this communication should be directed to the Office of Petitions Staff at (571) 272-3282.

Patricia Faison-Ball
Senior Petitions Attorney
Office of Petitions

UNITED STATES PATENT AND TRADEMARK OFFICE

Commissioner for Patents
United States Patent and Trademark Office
P.O. Box 1450
Alexandria, VA 22313-1450
www.uspto.gov

MAILED

DEC 02 2010

OFFICE OF PETITIONS

Law Office of Stacy Matulis
9806 Gretna Green Drive
Tampa FL 33626

In re Application of :
Freed :
Application No. 12/406,280 : DECISION ON PETITION
Filed: March 18, 2009 : UNDER 37 CFR 1.78(a)(6)
For: ROLLING TRANSPORT CONTAINER :

This is a decision on the petition under 37 CFR 1.78(a)(6), filed September 14, 2010, to accept an unintentionally delayed claim under 35 U.S.C. §119(e) for the benefit of the prior-filed provisional application set forth in the concurrently filed amendment.

The petition is **GRANTED.**

A petition under 37 CFR 1.78(a)(6) is only applicable to those applications filed on or after November 29, 2000. Further, the petition is appropriate only after expiration of the period specified in 37 CFR 1.78(a)(5)(ii) and must be filed during the pendency of the nonprovisional application. In addition, the petition must be accompanied by:

(1) the reference required by 35 U.S.C. § 119(e) and 37 CFR 1.78(a)(5)(i) to the prior-filed application, unless previously submitted;
(2) the surcharge set forth in § 1.17(t); and
(3) a statement that the entire delay between the date the claim was due under 37 CFR 1.78(a)(5)(ii) and the date the claim was filed was unintentional. The Director may require additional information where there is a question whether the delay was unintentional.

Additionally, the instant nonprovisional application must be pending at the time of filing of the reference to the prior-filed provisional application as required by 37 CFR 1.78(a)(5)(ii). Further, the nonprovisional application claiming the benefit of the prior-filed provisional application must have been filed within twelve months of the filing date of the prior-filed provisional application.

All of the above requirements having been satisfied, the late claim for priority under 35 U.S.C. § 119(e) is accepted as being unintentionally delayed.

The granting of the petition to accept the delayed benefit claim to the prior-filed application under 37 CFR 1.78(a)(6) should not be construed as meaning that this application is entitled to the benefit of the filing date of the prior-filed application. In order for this application to be entitled to the benefit of the prior-filed application, all other requirements under 35 U.S.C.

§119(e) and 37 CFR 1.78(a)(4) and (a)(5) must be met. Similarly, the fact that the corrected Filing Receipt accompanying this decision on petition includes the prior-filed application should not be construed as meaning that applicant is entitled to the claim for benefit of priority to the prior-filed application noted thereon. Accordingly, the examiner will, in due course, consider this benefit claim and determine whether the application is entitled to the benefit of the earlier filing date.

A corrected Filing Receipt, which includes the priority claim to the prior-filed provisional application, accompanies this decision on petition.

Any inquiries concerning this decision may be directed to Petitions Attorney Alesia M. Brown at (571) 272-3205. All other inquiries concerning either the examination procedures or status of the application should be directed to the Technology Center.

The application is being forwarded to Technology Center AU 3781 for consideration by the examiner of the claim under 35 U.S.C. §119(e) for the benefit of priority to the prior-filed provisional application.

Chris Bottorff
Supervisor
Office of Petitions

ATTACHMENT: Corrected Filing Receipt

UNITED STATES PATENT AND TRADEMARK OFFICE

UNITED STATES DEPARTMENT OF COMMERCE
United States Patent and Trademark Office
Address: COMMISSIONER FOR PATENTS
P.O. Box 1450
Alexandria, Virginia 22313-1450
www.uspto.gov

APPLICATION NUMBER	FILING or 371(c) DATE	GRP ART UNIT	FIL FEE REC'D	ATTY.DOCKET.NO	TOT CLAIMS	IND CLAIMS
12/406,280	03/18/2009	3781	462		19	3

CONFIRMATION NO. 5118

Law Office of Stacy Matulis
9806 Gretna Green Drive
Tampa, FL 33626

CORRECTED FILING RECEIPT

Date Mailed: 12/02/2010

Receipt is acknowledged of this non-provisional patent application. The application will be taken up for examination in due course. Applicant will be notified as to the results of the examination. Any correspondence concerning the application must include the following identification information: the U.S. APPLICATION NUMBER, FILING DATE, NAME OF APPLICANT, and TITLE OF INVENTION. Fees transmitted by check or draft are subject to collection. Please verify the accuracy of the data presented on this receipt. **If an error is noted on this Filing Receipt, please submit a written request for a Filing Receipt Correction. Please provide a copy of this Filing Receipt with the changes noted thereon. If you received a "Notice to File Missing Parts" for this application, please submit any corrections to this Filing Receipt with your reply to the Notice. When the USPTO processes the reply to the Notice, the USPTO will generate another Filing Receipt incorporating the requested corrections**

Applicant(s)

Jerry Russell Freed, Tampa, FL;

Power of Attorney:
Stacy Matulis--46719

Domestic Priority data as claimed by applicant

This appln claims benefit of 61/037,725 03/19/2008

Foreign Applications

If Required, Foreign Filing License Granted: 03/27/2009

The country code and number of your priority application, to be used for filing abroad under the Paris Convention, is **US 12/406,280**

Projected Publication Date: Not Applicable

Non-Publication Request: No

Early Publication Request: No
**** SMALL ENTITY ****

Title

Rolling Transport Container

Preliminary Class

220

PROTECTING YOUR INVENTION OUTSIDE THE UNITED STATES

Since the rights granted by a U.S. patent extend only throughout the territory of the United States and have no effect in a foreign country, an inventor who wishes patent protection in another country must apply for a patent in a specific country or in regional patent offices. Applicants may wish to consider the filing of an international application under the Patent Cooperation Treaty (PCT). An international (PCT) application generally has the same effect as a regular national patent application in each PCT-member country. The PCT process **simplifies** the filing of patent applications on the same invention in member countries, but **does not result** in a grant of "an international patent" and does not eliminate the need of applicants to file additional documents and fees in countries where patent protection is desired.

Almost every country has its own patent law, and a person desiring a patent in a particular country must make an application for patent in that country in accordance with its particular laws. Since the laws of many countries differ in various respects from the patent law of the United States, applicants are advised to seek guidance from specific foreign countries to ensure that patent rights are not lost prematurely.

Applicants also are advised that in the case of inventions made in the United States, the Director of the USPTO must issue a license before applicants can apply for a patent in a foreign country. The filing of a U.S. patent application serves as a request for a foreign filing license. The application's filing receipt contains further information and guidance as to the status of applicant's license for foreign filing.

Applicants may wish to consult the USPTO booklet, "General Information Concerning Patents" (specifically, the section entitled "Treaties and Foreign Patents") for more information on timeframes and deadlines for filing foreign patent applications. The guide is available either by contacting the USPTO Contact Center at 800-786-9199, or it can be viewed on the USPTO website at http://www.uspto.gov/web/offices/pac/doc/general/index.html.

For information on preventing theft of your intellectual property (patents, trademarks and copyrights), you may wish to consult the U.S. Government website, http://www.stopfakes.gov. Part of a Department of Commerce initiative, this website includes self-help "toolkits" giving innovators guidance on how to protect intellectual property in specific countries such as China, Korea and Mexico. For questions regarding patent enforcement issues, applicants may call the U.S. Government hotline at 1-866-999-HALT (1-866-999-4158).

LICENSE FOR FOREIGN FILING UNDER

Title 35, United States Code, Section 184

Title 37, Code of Federal Regulations, 5.11 & 5.15

GRANTED

The applicant has been granted a license under 35 U.S.C. 184, if the phrase "IF REQUIRED, FOREIGN FILING LICENSE GRANTED" followed by a date appears on this form. Such licenses are issued in all applications where the conditions for issuance of a license have been met, regardless of whether or not a license may be required as

set forth in 37 CFR 5.15. The scope and limitations of this license are set forth in 37 CFR 5.15(a) unless an earlier license has been issued under 37 CFR 5.15(b). The license is subject to revocation upon written notification. The date indicated is the effective date of the license, unless an earlier license of similar scope has been granted under 37 CFR 5.13 or 5.14.

This license is to be retained by the licensee and may be used at any time on or after the effective date thereof unless it is revoked. This license is automatically transferred to any related applications(s) filed under 37 CFR 1.53(d). This license is not retroactive.

The grant of a license does not in any way lessen the responsibility of a licensee for the security of the subject matter as imposed by any Government contract or the provisions of existing laws relating to espionage and the national security or the export of technical data. Licensees should apprise themselves of current regulations especially with respect to certain countries, of other agencies, particularly the Office of Defense Trade Controls, Department of State (with respect to Arms, Munitions and Implements of War (22 CFR 121-128)); the Bureau of Industry and Security, Department of Commerce (15 CFR parts 730-774); the Office of Foreign AssetsControl, Department of Treasury (31 CFR Parts 500+) and the Department of Energy.

NOT GRANTED

No license under 35 U.S.C. 184 has been granted at this time, if the phrase "IF REQUIRED, FOREIGN FILING LICENSE GRANTED" DOES NOT appear on this form. Applicant may still petition for a license under 37 CFR 5.12, if a license is desired before the expiration of 6 months from the filing date of the application. If 6 months has lapsed from the filing date of this application and the licensee has not received any indication of a secrecy order under 35 U.S.C. 181, the licensee may foreign file the application pursuant to 37 CFR 5.15(b).

Attorney Docket No. P25936-US2

IN THE UNITED STATES PATENT AND TRADEMARK OFFICE

Inventor(s):	Stefan Parkvall	§	Group Art Unit:	2617
Application No:	12/406,282	§	Examiner:	Dwayne D. Bost
Filed:	March 18, 2009	§	Confirmation No.	5121

FOR: IMPROVED UPLINK SCHEDULING IN A CELLULAR SYSTEM

Via EFS-Web

Mail Stop PCT
Commissioner for Patents
P. O. Box 1450
Alexandria, VA 22313.1450

CERTIFICATE OF TRANSMISSION BY EFS-WEB

I hereby certify that this paper or fee is being transmitted to the United States Patent and Trademark Office electronically via EFS-Web.

Date: **Dec. 31, 2010**

Signature: **/Todd A. Cason, Reg No 54,020/**

Name: Todd A. Cason

Dear Sir:

PETITION TO MAKE SPECIAL
UNDER 37 C.F.R. § 1.102

In accordance with the U.S.P.T.O.'s "Backlog Reduction Stimulus Plan," as set forth in the Official Gazette Notices of December 22, 2009 (*see* 1349 Off. Gaz. Pat. Off. 304), February 23, 2010 (*see* 1351 *Off. Gaz. Pat. Off.* 202), and July 20, 2010 (*see* 1356 *Off. Gaz. Pat. Off.* 173) (collectively the "*Official Gazette Notices*"), Telefonaktiebolaget LM Ericsson ("Applicant") submits this Petition to Make Special (this "Petition") and requests that the above-referenced application (the "Present Application") be accorded special status under 37 C.F.R. § 1.102.

As required by the *Official Gazette Notices*, the following conditions have been satisfied:

1) The Present Application is a non-provisional application that has an actual filing date earlier than October 1, 2009;

2) Applicant is the assignee of another non-provisional application, U.S. Pat. Appl. No. 12/296,991 (the "Abandoned Application") that has an actual filing date earlier than October 1, 2009 and is complete under 37 C.F.R. § 1.53;

3) Applicant is currently the sole assignee of both the Present Application and the Abandoned Application and has been since before October 1, 2009;

4) On the date this Petition to Make Special was filed, Applicant also filed a Declaration of Express Abandonment Under 37 C.F.R.§ 1.138 (the "Abandonment Declaration") expressly abandoning the Abandoned Application. Applicant believes the Abandonment Declaration was filed prior to the Abandoned Application being taken up for examination. Additionally, in accordance with the *Office Gazette Notices*, the Abandonment Declaration included:

a) A statement that Applicant has not and will not file an application that claims the benefit of the filing date of the Abandoned Application under any provision of Title 35 of the U.S.C.;

b) A statement that Applicant agrees not to, in the future, request a refund of any fees paid in the Abandoned Application; and

c) A statement that Applicant has not and will not file a new application claiming the same inventions as is currently claimed in the Abandoned Application; and

5) Applicant now files this Petition under 37 C.F.R. § 1.102 in the Present Application. As part of this Petition, Applicant respectfully notes that:

a) The basis under which special status is being sought is the express abandonment of another copending application pursuant to the Backlog Reduction Stimulus Plan established by the *Official Gazette Notices* conditioned on the granting of this Petition;

b) A copy of the Abandonment Declaration is submitted herewith;

c) The Present Application and the Abandoned Application have both been owned by Telefonaktiebolaget LM Ericsson, as sole assignee, since before October 1, 2009, which qualifies the Present Application for special status pursuant to the Backlog Reduction Stimulus Plan;

d) As indicated above, the Abandoned Application was assigned the application number U.S. Pat. Appl. No. 12/296,991;

e) Applicant has not filed petitions requesting special status under the Backlog Reduction Stimulus Plan in more than fourteen (14) other applications; and

f) Applicant agrees to make an election without traverse via a telephone interview if the U.S.P.T.O. deems the claims of the Present Application to be directed to two or more independent and distinct inventions.

Applicant respectfully notes that, pursuant to the *Official Gazette Notices*, the fee requirement for petitions to make special under 37 C.F.R. § 1.102 is waived, and Applicant believes no further fees are necessary at this time. However, the Commissioner is hereby authorized to deduct any necessary fees from, or to credit any overcharges to, Deposit Account No. 50-1379.

Respectfully submitted,

/Todd A. Cason, Reg No 54,020/

Todd A. Cason
Reg. No. 54,020

Ericsson Inc.
6300 Legacy Drive
M/S EVR 1-C-11
Plano, TX 75024
972-583-8510

Electronic Acknowledgement Receipt

EFS ID:	9147099
Application Number:	12296991
International Application Number:	
Confirmation Number:	3282
Title of Invention:	Method And Arrangements For Providing Information Regarding GAN Coverage In The Cellular Radio Communication Network
First Named Inventor/Applicant Name:	Peter Ostrup
Customer Number:	27045
Filer:	Steven Ware Smith/Todd Cason
Filer Authorized By:	Steven Ware Smith
Attorney Docket Number:	P20853-US1
Receipt Date:	31-DEC-2010
Filing Date:	13-OCT-2008
Time Stamp:	19:26:26
Application Type:	U.S. National Stage under 35 USC 371

Payment information:

Submitted with Payment	no

File Listing:

Document Number	Document Description	File Name	File Size(Bytes)/ Message Digest	Multi Part /.zip	Pages (if appl.)
1	Letter Express Abandonment of the application	P20853-RequestFile.pdf	25002 543bd8330fffc5670926a209fd0e7bbf54c1a217	no	2

Warnings:	
Information:	

Total Files Size (in bytes):	25002

This Acknowledgement Receipt evidences receipt on the noted date by the USPTO of the indicated documents, characterized by the applicant, and including page counts, where applicable. It serves as evidence of receipt similar to a Post Card, as described in MPEP 503.

New Applications Under 35 U.S.C. 111

If a new application is being filed and the application includes the necessary components for a filing date (see 37 CFR 1.53(b)-(d) and MPEP 506), a Filing Receipt (37 CFR 1.54) will be issued in due course and the date shown on this Acknowledgement Receipt will establish the filing date of the application.

National Stage of an International Application under 35 U.S.C. 371

If a timely submission to enter the national stage of an international application is compliant with the conditions of 35 U.S.C. 371 and other applicable requirements a Form PCT/DO/EO/903 indicating acceptance of the application as a national stage submission under 35 U.S.C. 371 will be issued in addition to the Filing Receipt, in due course.

New International Application Filed with the USPTO as a Receiving Office

If a new international application is being filed and the international application includes the necessary components for an international filing date (see PCT Article 11 and MPEP 1810), a Notification of the International Application Number and of the International Filing Date (Form PCT/RO/105) will be issued in due course, subject to prescriptions concerning national security, and the date shown on this Acknowledgement Receipt will establish the international filing date of the application.

Attorney Docket No. P20853-US1

IN THE UNITED STATES PATENT AND TRADEMARK OFFICE

Inventor(s):	Peter Ostrup, et al.	§	Group Art Unit:	4153
Application No:	12/296,991	§	Examiner:	Suheil Khan
Filed:	Oct. 13, 2008	§	Confirmation No.	3282

FOR: METHOD AND ARRANGEMENTS FOR PROVIDING INFORMATION REGARDING GAN COVERAGE IN THE CELLULAR RADIO COMMUNICATION NETWORK

Via EFS-Web

Mail Stop PCT
Commissioner for Patents
P. O. Box 1450
Alexandria, VA 22313.1450

CERTIFICATE OF TRANSMISSION BY EFS-WEB

I hereby certify that this paper or fee is being transmitted to the United States Patent and Trademark Office electronically via EFS-Web.

Date: **Dec. 31, 2010**

Signature: **/Todd A. Cason, Reg No 54,020/**

Name: Todd A. Cason

Dear Sir:

DECLARATION OF EXPRESS ABANDONMENT UNDER 37 C.F.R § 1.138

For the purpose of participating in the U.S.P.T.O.'s Backlog Reduction Stimulus Plan set forth in the Official Gazette Notices of December 22, 2009 (*see* 1349 Off. Gaz. Pat. Off. 304), February 23, 2010 (*see* 1351 *Off. Gaz. Pat. Off.* 202), and July 20, 2010 (*see* 1356 *Off. Gaz. Pat. Off.* 173) (collectively, the "*Official Gazette Notices*"), Telefonaktiebolaget LM Ericsson ("Applicant"), as sole assignee of the relevant patent, expressly abandons U.S. Pat. Appl. No. 12/296,991 (the "Abandoned Application") under 37 C.F.R. § 1.138. To the extent permissible under the Backlog Reduction Stimulus Plan, Applicant conditions this abandonment of the Abandoned Application on the U.S.P.T.O. granting the Petition to Make Special Under 37 C.F.R. § 1.102 filed concurrently with this Declaration in U.S. Pat. Appl. No. 12/406,282.

Additionally, in accordance with the requirements of the *Office Gazette Notices*, Applicant has not filed and will not file any other application claiming the same invention presently claimed by the Abandoned Application. Applicant also has not filed and will not file another application claiming the benefit of the Abandoned Application's filing date under any provision of Title 35 of the U.S.C. Moreover, Applicant agrees not to, in the future, request refund of any fees paid on the Abandoned Application.

Respectfully submitted,

/Todd A. Cason, Reg No 54,020/

Todd A. Cason
Reg. No. 54,020

Ericsson Inc.
6300 Legacy Drive
M/S EVR 1-C-11
Plano, TX 75024
972-583-8510

UNITED STATES PATENT AND TRADEMARK OFFICE

Commissioner for Patents
United States Patent and Trademark Office
P.O. Box 1450
Alexandria, VA 22313-1450
www.uspto.gov

ERICSSON INC.
6300 LEGACY DRIVE
M/S EVR 1-C-11
PLANO TX 75024

MAILED

JAN 14 2011

OFFICE OF PETITIONS

In re Application of :
PARKVALL :
Application No. 12/406,282 :
Filed: March 18, 2009 :
Attorney Docket No. **4015-6422 / P25936-US2** :

DECISION ON PETITION
TO MAKE SPECIAL
37 CFR 1.102

This is a decision on the petition under 37 CFR 1.102, filed December 31, 2010, to make the above-identified application special under the Patent Application Backlog Reduction Stimulus Plan which is a pilot program set forth at 74 Federal Register Notice 62285 (November 27, 2009) and 75 Federal register Notice 36063 (June 24, 2010).

The petition is **GRANTED**.

A grantable petition to make an application special under 37 CFR 1.102 and the pilot program as set forth in 74 FR 62285 and 75 FR 36063 must be directed to a nonprovisional application filed prior to October 1, 2009.

The USPTO will accord special status for examination under Patent Application Backlog Reduction Stimulus Plan under the following conditions:

(1) The application for which special status is sought is a nonprovisional application that has an actual filing date earlier than October 1, 2009;

(2) The applicant has another copending nonprovisional application that has an actual filing date earlier than October 1, 2009, and is complete under 37 CFR 1.53;

(3) The application for which special status is sought and the other copending nonprovisional application either are owned by the same party as of October 1, 2009, or name at least one inventor in common;

(4) The applicant files a letter of express abandonment under 37 CFR 1.138(a) in the copending nonprovisional application before it has been taken up for examination and

a) includes a statement that the applicant has not and will not file a new application that claims the same invention claimed in the expressly abandoned application;

b) includes a statement that the applicant has not and will not file an application that claims the benefit of the expressly abandoned application under any provision of title 35, United States Code, and

c) includes a statement that the applicant agrees not to request a refund of any fees paid in the expressly abandoned application; and

(5) The applicant files a petition under 37 CFR 1.102 in the application for which special status is sought that

a) includes a specific identification of the relationship between the applications that qualifies the application for special status;

b) identifies, by application number if available, the application that is being expressly abandoned;

c) provides a statement certifying that applicant has not filed petitions in more than fourteen (14) other applications requesting special status under this program; and

d) provides a statement that applicant agrees to make an election without traverse in a telephonic interview if the Office determines that the claims of the application to be made special are directed to two or more independent and distinct inventions.

The requirement for a fee for consideration of the petition to make special for applications pertaining to Patent Application Backlog Reduction Stimulus Plan has been waived.

The instant petition complies with the conditions required under Patent Application Backlog Reduction Stimulus Plan. Accordingly, the above-identified application has been accorded "special" status.

Telephone inquires concerning this decision should be directed to Brian W. Brown at 571-272-5338.

All other inquires concerning either the examination or status of the application should be directed to the Technology Center.

The application is being forwarded to the Office of Patent Application Processing for further processing commensurate with this decision.

Brian W. Brown
Petitions Examiner
Office of Petitions

UNITED STATES PATENT AND TRADEMARK OFFICE

Commissioner for Patents
United States Patent and Trademark Office
P.O. Box 1450
Alexandria, VA 22313-1450
www.uspto.gov

OSHA LIANG L.L.P
Two Houston Center
909 Fannin, Suite 3500
Houston, TX 77010

MAILED

JAN 18 2011

OFFICE OF PETITIONS

In re Application of	:	
Keith Roizman, et al.	:	
Application No. 12/406,292	:	DECISION ON PETITION
Filed: March 18, 2009	:	TO WITHDRAW
Attorney Docket No. 17649/002001	:	FROM RECORD
	:	

This is a decision on the Request to Withdraw as attorney or agent of record under 37 C.F.R. § 1.36(b), filed December 17, 2010.

The request is **APPROVED.**

A grantable request to withdraw as attorney/agent of record must be signed by every attorney/agent seeking to withdraw or contain a clear indication that one attorney is signing on behalf of another/others. A request to withdraw will not be approved unless at least 30 (thirty) days would remain between the date of approval and the later of the expiration date of a time to file a response or the expiration date of the maximum time period which can be extended under 37 C.F.R. § 1.136(a).

The request was signed by Jeffrey S. Bergman on behalf of all attorneys of record. All attorneys/agents have been withdrawn. Applicant is reminded that there is no attorney of record at this time.

All future communications from the Office will be directed to the assignee of the entire interest at the first copied address below until otherwise properly notified by the applicant.

Telephone inquiries concerning this decision should be directed to Terri Johnson at 571-272-2991.

/Terri Johnson/
Terri Johnson
Petitions Examiner
Office of Petitions

cc: **Iontherapeutics, Inc.**
8576 Cole Crest Drive
Los Angeles, CA 90046

UNITED STATES PATENT AND TRADEMARK OFFICE

UNITED STATES DEPARTMENT OF COMMERCE
United States Patent and Trademark Office
Address: COMMISSIONER FOR PATENTS
P.O. Box 1450
Alexandria, Virginia 22313-1450
www.uspto.gov

APPLICATION NUMBER	FILING OR 371(C) DATE	FIRST NAMED APPLICANT	ATTY. DOCKET NO./TITLE
12/406,292	03/18/2009	Keith ROIZMAN	17649/002001

CONFIRMATION NO. 5135

POWER OF ATTORNEY NOTICE

22511
OSHA LIANG L.L.P.
TWO HOUSTON CENTER
909 FANNIN, SUITE 3500
HOUSTON, TX 77010

OC000000045495831

Date Mailed: 01/14/2011

NOTICE REGARDING CHANGE OF POWER OF ATTORNEY

This is in response to the Power of Attorney filed 12/17/2010.

- The withdrawal as attorney in this application has been accepted. Future correspondence will be mailed to the new address of record. 37 CFR 1.33.

/tsjohnson/

Office of Data Management, Application Assistance Unit (571) 272-4000, or (571) 272-4200, or 1-888-786-0101

UNITED STATES PATENT AND TRADEMARK OFFICE

Commissioner for Patents
United States Patent and Trademark Office
P.O. Box 1450
Alexandria, VA 22313-1450
www.uspto.gov

COMPUTER PACKAGES, INC.
414 HUNGERFORD DRIVE
ROCKVILLE MC 20850

MAILED

MAY 27 2011

OFFICE OF PETITIONS

In re Patent No. 7,913,414 :
Issue Date: March 29, 2011 :
Application No. 12/406,301 : DECISION ON PETITION
Filed: March 18, 2009 :
Attorney Docket No. 08-1253 :

This is a decision on the petition under 37 CFR 3.81(b), which is being treated as a petition under 37 CFR 1.322 (b) filed April 8, 2011, to issue a Certificate of Correction of Office mistake.

The petition under 37 CFR 1.322(b) is **GRANTED**.

In the petition filed April 8, 2011, petitioner asserts the United States Patent and Trademark Office (Office) made a mistake in the fifth inventor's name. The inventor's full legal name is "**Arnold E. Vallejos**" the name "**Ed Vallejos**" should be removed.

A review of the Office record indicates the inventor's name was stated as "Ed Vallejos" on the Application Data Sheet filed March 18, 2009, however, the declaration filed March 18, 2009, clearly states the inventor's name as **Arnold E. Vallejos**.

Accordingly, since the mistake in the patent incurred through the fault of the Office and the mistake is clearly disclosed in the record of the Office, a certificate of correction will be issued to correct the spelling of the inventor's name without expense to the patentee.

Telephone inquiries concerning this decision may be directed to Diane Goodwyn at (571) 272-6735.

Inquiries regarding the issuance of a certificate of correction should be directed to the Certificate of Correction Branch at (571) 272-4200.

The Certificates of Correction Branch will be notified of this decision granting the petition under 37 CFR 1.322(b) and directing issuance of the requested Certificate of Correction.

Thurman K. Page
Petitions Examiner
Office of Petitions

UNITED STATES PATENT AND TRADEMARK OFFICE

UNITED STATES DEPARTMENT OF COMMERCE
United States Patent and Trademark Office
Address: COMMISSIONER FOR PATENTS
P.O. Box 1450
Alexandria, Virginia 22313-1450
www.uspto.gov

APPLICATION NO.	FILING DATE	FIRST NAMED INVENTOR	ATTORNEY DOCKET NO.	CONFIRMATION NO.
12/406,306	03/18/2009	Margaret Rice	IPX09RICE01	5156

62973 7590 03/31/2011

JAY M. SCHLOFF
6960 Orchard Lake Road
Suite 315
West Bloomfield, MI 48322

EXAMINER	
DAVIS, CASSANDRA HOPE	
ART UNIT	PAPER NUMBER
3611	
MAIL DATE	DELIVERY MODE
03/31/2011	PAPER

Please find below and/or attached an Office communication concerning this application or proceeding.

The time period for reply, if any, is set in the attached communication.

UNITED STATES PATENT AND TRADEMARK OFFICE

Commissioner for Patents
United States Patent and Trademark Office
P.O. Box 1450
Alexandria, VA 22313-1450
www.uspto.gov

MAR 3 1 2011

JAY M. SCHLOFF
6960 Orchard Lake Road
Suite 315
West Bloomfield, MI 43822

In re application of	:	
Margaret Rice	:	DECISION ON PETITION
Application No. 12/406,306	:	UNDER 37 CFR 1.181
Filed: March 18, 2009	:	
For: MEDICATION TRACKER UNIT	:	

This is in reply to applicant's "Request for Reconsideration" received February 8, 2011 requesting withdrawal of the August 17, 2010 Office action. It is being treated as a petition under 37 CFR 1.181.

The petition is **DISMISSED**.

Petitioner asserts that the Office action mailed August 17, 2010 does not address or dispose of pending claim 10. Accordingly, it is incomplete within the meaning of 37 CFR 1.104, and as such, the Office action should be withdrawn and reissued with a new mail date.

In accordance with MPEP 710.06, the Office will grant a petition to reset the period for reply to run from the date the error is corrected, when an Office action contains some defect and the error is called to the attention of the Office within one month of the mail date of the action. If the error is brought to the attention of the Office greater than one month after the date of the Office action but before the expiration of the reply period, the Office will set a new period for reply, if requested to do so by the applicant, to substantially equal the time remaining in the reply period. Any such reset period being at least one month. If any such error is not brought to the attention of the Office prior to the expiration of the response period, the period will not be restarted and any response would require the appropriate extension fee to be considered timely.

A review of the file record indicates that a non-final Office action was mailed to the address of record on August 17, 2010. The Office Action Summary (PTOL-326) indicates that claims 1-10 are rejected. However, as asserted by the applicant, none of the rejection statements include claim 10. Claim 1 recites "a medication tracker unit comprising...a picture frame disposed on a front portion of the freestanding body...a plurality of sheets and a plurality of marking objects...a timer coupled to the

freestanding body, the timer capable of reminding a user to take medication, wherein the displayed sheet is adapted to be marked by the user through a marking object of the plurality of marking objects corresponding to the medication." Claim 9 recites "the medication tracker unit of claim 1, wherein the timer is configured for setting one or more reminders for reminding the user to take the medication." Claim 10 is directed to a method comprising "setting one or more reminders for taking at least one medication; taking the at least one medication based on the one or more reminders; and marking on a sheet by a marking object to confirm an intake of the at least one medication, the sheet displayed in a picture frame disposed on a front portion of a freestanding body."

Although claim 10 was not specifically included in any of the rejection statements, a review of claims 1 and 9 shows that the method of claim 10 is encompassed by claims 1 and 9. Claim 10 should have been included in the rejection of claims 2-6 and 9 as being unpatentable over Virvo or the alternative rejection over Virvo in view of Holt since the method of claim 10 is encompassed by the article recited in claim 9. Accordingly, it was a typographical error on the part of the examiner to not include claim 10 in the rejection statements. Accordingly, the Office action is not incomplete within the meaning of 37 CFR 1.104.

The Office action mailed August 17, 2010 had set a shorten statutory period of three (3) months. The petition was filed February 8, 2011, which is after the expiration of the shorten statutory period for reply. As indicated in MPEP 710.06, if the defective Office action is called to the attention of the Office after the expiration of the period for reply, the period will not be restarted and any appropriate extension fee will be required to render a reply timely.

The application will be returned to the examiner to correct the Office action error by including claim 10 in the rejections of claims 2-6 and 9. Per MPEP 710.06, the Office letter correcting the error will note that the time period for reply remains as set forth in the previous Office action.

Any questions concerning this decision should be directed to Teri P. Luu, Quality Assurance Specialist, at (571) 272-7045.

David Talbott, Director
Technology Center 3600
(571) 272-5150

DT/tpl: 03/07/11

UNITED STATES PATENT AND TRADEMARK OFFICE

Commissioner for Patents
United States Patent and Trademark Office
P.O. Box 1450
Alexandria, VA 22313-1450
www.uspto.gov

PATRICIA M. COSTANZO
PATS PENDING
P.O. BOX 101
ELMA, NY 14059

MAILED

MAR 21 2011

OFFICE OF PETITIONS

In re Application of
Robert A. GEISER, et *al.*
Application No. 12/406,310
Filed: March 18, 2009
Attorney Docket No. **HuberP_P_2_07**

DECISION ON PETITION TO WITHDRAW FROM RECORD

This is a decision on the Request to Withdraw as attorney or agent of record under 37 C.F.R. § 1.36(b), filed February 22, 2011.

The request is **NOT APPROVED**.

The request to withdraw as attorney/agent of record and change of correspondence address is hereby not accepted. Petitioner has not complied with current USPTO requirements, set forth in 37 CFR 10.40 concerning Request for Withdrawal as Attorney and Change of Correspondence Address.

Petitioner has not properly submitted forwarding correspondence address information for the application.

The Office will only accept correspondence address changes to the most current address information provided for the assignee of the entire interest *who properly became of record under 37 CFR 3.71*, or if no assignee of the entire interest has properly been made of record, the most current address information provided for the first named inventor. 37 CFR 3.71 (c) states:

> ***An assignee becomes of record either in a national patent application or a reexamination proceeding by filing a statement in compliance with § 3.73 (b) that is signed by a party who is authorized to act on behalf of the assignee.***

In order to request or take action in a patent matter, the assignee must establish its ownership of the patent to the satisfaction of the Director. In this regard, a Statement under 37 CFR 3.73(b) must have either: (i) documentary evidence of a chain of title from the original owner to the assignee (e.g., copy of an executed assignment), and a

statement affirming that the documentary evidence of the chain of title from the original owner to the assignee was or concurrently is being submitted for recordation pursuant to § 3.11; or (ii) a statement specifying where documentary evidence of a chain of title from the original owner to the assignee is recorded in the assignment records of the Office (e.g., reel and frame number). The 3.73B statement filed on April 9, 2009 is improper as the reel and frame numbers provided are incorrect.

Inquires concerning either the examination or status of the application should be directed to the Technology Center at (571) 272-2800. Telephone inquiries concerning this decision should be directed to the undersigned at (571) 272-7253.

/Monica A. Graves/
Petitions Examiner, Office of Petitions

cc: **QIMONDA AG**
GUSTAV-HEINEMANN-RING 212
MUNICH, GERMANY 81739

UNITED STATES PATENT AND TRADEMARK OFFICE

Commissioner for Patents
United States Patent and Trademark Office
P.O. Box 1450
Alexandria, VA 22313-1450
www.uspto.gov

WILLIAM H. EILBERG
316 CALIFORNIA AVE. #785
RENO NV 89509

MAILED

JAN 20 2012

OFFICE OF PETITIONS

In re Application of :
Gunn et al. :
Application No. 12/406,312 : DECISION ON PETITION
Filed: March 18, 2009 TO WITHDRAW FROM RECORD
Attorney Docket No. 662-01 :
:

This is a decision on the Request to Withdraw as attorney or agent of record under 37 C.F.R. § 1.36(b), filed January 5, 2012.

The request is **APPROVED**.

A grantable request to withdraw as attorney/agent of record must be signed by every attorney/agent seeking to withdraw or contain a clear indication that one attorney is signing on behalf of another/others. The Office will require the practitioner(s) to certify that he, she or they have: (1) given reasonable notice to the client, prior to the expiration of the reply period, which the practitioner(s) intends to withdraw from employment; (2) delivered to the client or a duly authorized representative of the client all papers and property (including funds) to which the client is entitled; and (3) notified the client of any replies that may be due and the time frame within which the client must respond, pursuant to 37 CFR 10.40 (c).

The request was signed by William H. Eilberg on behalf of all attorneys of record.

All attorneys/agents associated with the above-identified application have been withdrawn. Applicants are reminded that there is no attorney of record at this time.

All future correspondence will be directed to the first named inventor at the address indicated below.

Currently, there is an outstanding Office action mailed December 30, 2011 that requires a reply.

Telephone inquiries concerning this decision should be directed to the undersigned at (571) 272-7751. All other inquiries concerning either the examination or status of the application should be directed to the Technology Center.

/Joan Olszewski/
Joan Olszewski
Petitions Examiner
Office of Petitions

cc: Kevin J. Gunn
37 Forrest Lane
Carneys Point, NJ 08069

UNITED STATES PATENT AND TRADEMARK OFFICE

UNITED STATES DEPARTMENT OF COMMERCE
United States Patent and Trademark Office
Address: COMMISSIONER FOR PATENTS
P.O. Box 1450
Alexandria, Virginia 22313-1450
www.uspto.gov

APPLICATION NO.	FILING DATE	FIRST NAMED INVENTOR	ATTORNEY DOCKET NO.	CONFIRMATION NO.
12/406,373	03/18/2009	Takashi KOBAYASHI	MNL-2018-2261	5289

23117 7590 09/27/2011

NIXON & VANDERHYE, PC
901 NORTH GLEBE ROAD, 11TH FLOOR
ARLINGTON, VA 22203

EXAMINER	
CARTON, MICHAEL	
ART UNIT	**PAPER NUMBER**
3748	

MAIL DATE	DELIVERY MODE
09/27/2011	PAPER

Please find below and/or attached an Office communication concerning this application or proceeding.

The time period for reply, if any, is set in the attached communication.

UNITED STATES PATENT AND TRADEMARK OFFICE

Commissioner for Patents
United States Patent and Trademark Office
P.O. Box 1450
Alexandria, VA 22313-1450
www.uspto.gov

NIXON & VANDERHYE, PC
901 NORTH GLEBE ROAD, 11TH FLOOR
ARLINGTON VA 22203

In re Application of	:	
KOBAYASHI, TAKASHI, et al.	:	DECISION ON REQUEST TO
Application No. 12/406,373	:	PARTICIPATE IN PATENT
Filed: March 18, 2009	:	PCT/PROSECUTION HIGHWAY
Attorney Docket No. MNL-2018-2261	:	PROGRAM AND PETITION
For: EXHAUST GAS SWITCHING VALVE	:	TO MAKE SPECIAL UNDER
	:	37 CFR 1.102(a)

This is a decision on the request to participate in the Patent Prosecution Highway (PPH) program and the petition under 37 CFR 1.102(a), filed September 19, 2011 to make the above-identified application special.

The request and petition are granted.

A grantable request to participate in the PPH pilot program and petition to make special require:

(1) The U.S. application must validly claim priority under 35 U.S.C. 119(a) to one or more applications filed in the JPO;
(2) Applicant must submit a copy of the allowable/patentable claim(s) from the JPO/PCT application(s) along with an English translation thereof and a statement that the English translation is accurate;
(3) All the claims in the U.S. application must sufficiently correspond or be amended to sufficiently correspond to the allowable/patentable claim(s) in the JPO application(s);
(4) Examination of the U.S. application has not begun;
(5) Applicant must submit a copy of all the office actions from each of the JPO/PCT application(s) containing the allowable/patentable claim(s) along with an English translation thereof and a statement that the English translation is accurate; and
(6) Applicant must submit an IDS listing the documents cited by the JPO examiner in the JPO office action along with copies of documents except U.S. patents or U.S. patent application publications.

In light of the petition being properly submitted, the request to participate in the PPH program and the petition comply with the above requirements. Accordingly, the above-identified application has been accorded "special" status.

The applicant is encouraged to cite and submit all relevant prior art references, if any, to facilitate examination in this application. Upon completion of pre-examination processing, this application will be forwarded to an examiner for examination.

Telephone inquiries concerning this decision should be directed to Henry C. Yuen at 571-272-4485. All other inquiries concerning the examination or status of the application should be directed to Thomas Denion, SPE of Art Unit 3748, and 571-272-4759 for Class 060 and also accessible in the PAIR system at http://www.uspto.gov/ebc.index.html.

Petition is **granted**.

/Henry C. Yuen/

_____

Henry C. Yuen, Special Programs Examiner
Technology Center 3700 – Mechanical Engineering,
Manufacturing and Products
571-272-4856

UNITED STATES PATENT AND TRADEMARK OFFICE

Commissioner for Patents
United States Patent and Trademark Office
P.O. Box 1450
Alexandria, VA 22313-1450
www.uspto.gov

FITZPATRICK CELLA HARPER & SCINTO
1290 AVENUE OF THE AMERICAS
NEW YORK NY 10104-3800

MAILED

SEP 09 2010

OFFICE OF PETITIONS

In re Application of	:	
Naonori Kayama et al	:	
Application No. 12/406,381	:	DECISION GRANTING PETITION
Filed: March 18, 2009	:	UNDER 37 CFR 1.313(c)(2)
Attorney Docket No. 02910.102722.2	:	

This is a decision on the petition under 37 CFR 1.313(c)(2), filed September 8, 2010, to withdraw the above-identified application from issue after payment of the issue fee.

The petition is **GRANTED**.

The above-identified application is withdrawn from issue for consideration of a submission under 37 CFR 1.114 (request for continued examination). *See* 37 CFR 1.313(c)(2).

Petitioner is advised that the issue fee paid on August 30, 2010 cannot be refunded. If, however, this application is again allowed, petitioner may request that it be applied towards the issue fee required by the new Notice of Allowance.[1]

Telephone inquiries should be directed to the undersigned at (571) 272-3208.

This application is being referred to Technology Center AU 2854 for processing of the request for continued examination under 37 CFR 1.114 and for consideration of the concurrently filed IDS.

/Karen Creasy/
Karen Creasy
Petitions Examiner
Office of Petitions

[1] *The request to apply the issue fee to the new Notice may be satisfied by completing and returning the new Part B – Fee(s) Transmittal Form (along with any balance due at the time of submission). Petitioner is advised that the Issue Fee Transmittal Form must be completed and timely submitted to avoid abandonment of the application.*

UNITED STATES PATENT AND TRADEMARK OFFICE

Commissioner for Patents
United States Patent and Trademark Office
P.O. Box 1450
Alexandria, VA 22313-1450
www.uspto.gov

02910.102722.2
JRC

FITZPATRICK CELLA HARPER & SCINTO
1290 AVENUE OF THE AMERICAS
NEW YORK NY 10104-3800

MAILED

SEP 09 2010

OFFICE OF PETITIONS

In re Application of :
Naonori Kayama et al :
Application No. 12/406,381 : DECISION GRANTING PETITION
Filed: March 18, 2009 : UNDER 37 CFR 1.313(c)(2)
Attorney Docket No. 02910.102722.2 :

This is a decision on the petition under 37 CFR 1.313(c)(2), filed September 8, 2010, to withdraw the above-identified application from issue after payment of the issue fee.

The petition is **GRANTED**.

The above-identified application is withdrawn from issue for consideration of a submission under 37 CFR 1.114 (request for continued examination). *See* 37 CFR 1.313(c)(2).

Petitioner is advised that the issue fee paid on August 30, 2010 cannot be refunded. If, however, this application is again allowed, petitioner may request that it be applied towards the issue fee required by the new Notice of Allowance.[1]

Telephone inquiries should be directed to the undersigned at (571) 272-3208.

This application is being referred to Technology Center AU 2854 for processing of the request for continued examination under 37 CFR 1.114 and for consideration of the concurrently filed IDS.

/Karen Creasy/
Karen Creasy
Petitions Examiner
Office of Petitions

RECEIVED
SEP 16 2010

SEP 16 2010

[1] *The request to apply the issue fee to the new Notice may be satisfied by completing and returning the new Part B – Fee(s) Transmittal Form (along with any balance due at the time of submission). Petitioner is advised that the Issue Fee Transmittal Form* ***must*** *be completed and timely submitted to avoid abandonment of the application.*

UNITED STATES PATENT AND TRADEMARK OFFICE

Commissioner for Patents
United States Patent and Trademark Office
P.O. Box 1450
Alexandria, VA 22313-1450
www.uspto.gov

WESTERMAN, HATTORI, DANIELS & ADRIAN, LLP
1250 CONNECTICUT AVENUE, NW
SUITE 700
WASHINGTON DC 20036

MAILED
FEB 17 2012
OFFICE OF PETITIONS

In re Application of	:	
Yasuhiro Oba	:	
Application No. 12/406,420	:	DECISION GRANTING PETITION
Filed: March 18, 2009	:	UNDER 37 CFR 1.313(c)(2)
Attorney Docket No. 090375	:	

This is a decision on the petition under 37 CFR 1.313(c)(2), filed February 16, 2012, to withdraw the above-identified application from issue after payment of the issue fee.

The petition is **GRANTED**.

The above-identified application is withdrawn from issue for consideration of a submission under 37 CFR 1.114 (request for continued examination). *See* 37 CFR 1.313(c)(2).

Petitioner is advised that the issue fee paid on January 25, 2012 cannot be refunded. If, however, this application is again allowed, petitioner may request that it be applied towards the issue fee required by the new Notice of Allowance.[1]

Telephone inquiries should be directed to the undersigned at (571) 272-3208.

This application is being referred to Technology Center AU 2874 for processing of the request for continued examination under 37 CFR 1.114 and for consideration of the concurrently filed IDS.

/Karen Creasy/
Karen Creasy
Petitions Examiner
Office of Petitions

[1] *The request to apply the issue fee to the new Notice may be satisfied by completing and returning the new Part B – Fee(s) Transmittal Form (along with any balance due at the time of submission). Petitioner is advised that the Issue Fee Transmittal Form must be completed and timely submitted to avoid abandonment of the application.*

UNITED STATES PATENT AND TRADEMARK OFFICE

UNITED STATES DEPARTMENT OF COMMERCE
United States Patent and Trademark Office
Address: COMMISSIONER FOR PATENTS
P.O. Box 1450
Alexandria, Virginia 22313-1450
www.uspto.gov

APPLICATION NO.	FILING DATE	FIRST NAMED INVENTOR	ATTORNEY DOCKET NO.	CONFIRMATION NO.
12/406,529	03/18/2009	Kouichi NAKAGOMI	09130/LH	5583

1933 7590 03/29/2011

HOLTZ, HOLTZ, GOODMAN & CHICK PC
220 Fifth Avenue
16TH Floor
NEW YORK, NY 10001-7708

EXAMINER	
YE, LIN	

ART UNIT	PAPER NUMBER
2622	

MAIL DATE	DELIVERY MODE
03/29/2011	PAPER

Please find below and/or attached an Office communication concerning this application or proceeding.

The time period for reply, if any, is set in the attached communication.

UNITED STATES PATENT AND TRADEMARK OFFICE

Commissioner for Patents
United States Patent and Trademark Office
P.O. Box 1450
Alexandria, VA 22313-1450
www.uspto.gov

HOLTZ, HOLTZ, GOODMAN & CHICK PC
220 Fifth Avenue
16TH Floor
NEW YORK NY 10001-7708

MAIL

MAR 29 2011

DIRECTOR'S OFFICE
TECHNOLOGY CENTER 2600

In re Application of :
NAKAGOMI, KOUICHI et al. :
Application No. 12/406,529 :
Filed: March 18, 2009 :
Attorney Docket No. 09130/LH :

DECISION ON REQUEST TO PARTICIPATE IN PATENT PROSECUTION HIGHWAY PROGRAM AND PETITION TO MAKE SPECIAL UNDER 37 CFR 1.102(a)

This is a decision on the request to participate in the Patent Prosecution Highway (PPH) program and the petition under 37 CFR 1.102(a), filed February 02, 2011 to make the above-identified application special.

The request and petition are **GRANTED**.

A grantable request to participate in the PPH program and petition to make special require:

(1) The U.S. application must validly claim priority under 35 U.S.C. 119(a) to one or more applications filed in the JPO;
(2) Applicant must submit a copy of the allowable/patentable claim(s) from the JPO application(s) along with an English translation thereof and a statement that the English translation is accurate;
(3) All the claims in the U.S. application must sufficiently correspond or be amended to sufficiently correspond to the allowable/patentable claim(s) in the JPO application(s);
(4) Examination of the U.S. application has not begun;
(5) Applicant must submit a copy of all the office actions from each of the JPO application(s) containing the allowable/patentable claim(s) along with an English translation thereof and a statement that the English translation is accurate; and
(6) Applicant must submit an IDS listing the documents cited by the JPO examiner in the JPO office action along with copies of documents except U.S. patents or U.S. patent application publications.

The request to participate in the PPH program and petition comply with the above requirements. Accordingly, the above-identified application has been accorded "special" status.

Telephone inquiries concerning this decision should be directed to Michael Horabik at 571-272-3068.

All other inquiries concerning the examination or status of the application should be directed to Patent Application Information Retrieval (PAIR) system.

The application is being forwarded to the examiner for action on the merits commensurate with this decision.

/Michael Horabik/

Michael Horabik
Quality Assurance Specialist
Technology Center 2600
Communications

UNITED STATES PATENT AND TRADEMARK OFFICE

Commissioner for Patents
United States Patent and Trademark Office
P.O. Box 1450
Alexandria, VA 22313-1450
www.uspto.gov

MOMENTIVE SPECIALTY CHEMICALS INC.
12650 DIRECTORS DRIVE, SUITE 100
STAFFORD TX 77477

MAILED

NOV 04 2011

OFFICE OF PETITIONS

In re Application of :
Steven J. Wantling, et al. :
Application No.: 12/406,579 : ON PETITION
Filed: March 18, 2009 :
Attorney Docket No.: 07-17-FF.US01 :

This is a decision on the petition, filed November 2, 2011, under 37 CFR 1.313(c)(2) to withdraw the above-identified application from issue after payment of the issue fee.

The petition is not signed by a registered patent attorney or patent agent of record. However, in accordance with 37 CFR 1.34, the signature of Mr. Brian H. Kentshire appearing on the correspondence shall constitute a representation to the United States Patent and Trademark Office that he is authorized to represent the particular party on whose behalf he acts.

The petition is **GRANTED**.

The above-identified application is withdrawn from issue for consideration of a submission under 37 CFR 1.114 (request for continued examination). See 37 CFR 1.313(c)(2).

Petitioner is advised that the issue fee paid on October 6, 2011, cannot be refunded. If, however, this application is again allowed, petitioner may request that it be applied towards the issue fee required by the new Notice of Allowance.[1]

Telephone inquiries relating to this decision should be directed to the undersigned at (571) 272-3204.

The application is being referred to Technology Center AU 1731 for further processing of the request for continued examination under 37 CFR 1.114.

/SDB/
Sherry D. Brinkley
Petitions Examiner
Office of Petitions

[1] *The request to apply the issue fee to the new Notice may be satisfied by completing and returning the new Part B – Fee(s) Transmittal Form (along with any balance due at the time of submission). Petitioner is advised that the Issue Fee Transmittal Form must be completed and timely submitted to avoid abandonment of the application.*

UNITED STATES PATENT AND TRADEMARK OFFICE

Commissioner for Patents
United States Patent and Trademark Office
P.O. Box 1450
Alexandria, VA 22313-1450
www.uspto.gov

DUNLAP CODDING, P.C.
PO BOX 16370
OKLAHOMA CITY OK 73113

MAILED

AUG 22 2011

OFFICE OF PETITIONS

In re Application of
OLSEN et al.
Application No. 12/406,638
Filed: 03/18/2009
Attorney Docket No. 7651.015

DECISION ON PETITION
UNDER 37 CFR 1.78(a)(3)

This is a decision on the petition under 37 CFR 1.78(a)(3), filed August 8, 2011, to accept an unintentionally delayed claim under 35 U.S.C. 120 for the benefit of the prior-filed nonprovisional applications.

The petition is **GRANTED.**

A petition for acceptance of a delayed benefit claim under 37 CFR 1.78(a)(3) is only applicable to those applications filed on or after November 29, 2000. Further, the petition is appropriate only after the expiration of the period specified in 37 CFR 1.78(a)(2)(ii). In addition, the petition under 37 CFR 1.78(a)(3) must be accompanied by:

(1) the reference required by 35 U.S.C. 120 and 37 CFR 1.78(a)(2)(i) of the prior-filed application, unless previously submitted;
(2) the surcharge set forth in § 1.17(t); and
(3) a statement that the entire delay between the date the claim was due under 37 CFR 1.78(a)(2)(ii) and the date the claim was filed was unintentional. The Director may require additional information where there is a question whether the delay was unintentional.

All of the above requirements having been satisfied, the benefit claim under 35 U.S.C. 120 is accepted as being unintentionally delayed.

The granting of the petition to accept the delayed benefit claim to the prior-filed applications under 37 CFR 1.78(a)(3) should not be construed as meaning that this application is entitled to the benefit of the prior-filed applications. In order for this application to be entitled to the benefit of the prior-filed applications, all other requirements under 35 U.S.C. 120 and 37 CFR 1.78(a)(1) and (a)(2) must be met. Similarly, the fact that the corrected Filing Receipt accompanying this decision on petition includes the prior-filed applications should not be construed as meaning that applicant is entitled to the claim for benefit of priority to the prior-filed applications noted thereon. Accordingly, the examiner will, in due course, consider this benefit claim and determine whether the application is entitled to the benefit of the earlier filing date.

A corrected Filing Receipt, which includes the benefit claim to the prior-filed nonprovisional applications, accompanies this decision on petition.

Any inquiries concerning this decision may be directed to the undersigned at (571) 272-3211. All other inquiries concerning either the examination procedures or status of the application should be directed to the Technology Center.

This application is being forwarded to Technology Center Art Unit 1736 for consideration by the examiner of applicant's entitlement to claim benefit under 35 U.S.C. 120 to the prior-filed applications.

Christina Tartera Donnell

Christina Tartera Donnell
Senior Petitions Attorney
Office of Petitions

ATTACHMENT: Corrected Filing Receipt

UNITED STATES PATENT AND TRADEMARK OFFICE

UNITED STATES DEPARTMENT OF COMMERCE
United States Patent and Trademark Office
Address: COMMISSIONER FOR PATENTS
P.O. Box 1450
Alexandria, Virginia 22313-1450
www.uspto.gov

APPLICATION NUMBER	FILING or 371(c) DATE	GRP ART UNIT	FIL FEE REC'D	ATTY.DOCKET.NO	TOT CLAIMS	IND CLAIMS
12/406,638	03/18/2009	1736	774	7651.015	19	3

CONFIRMATION NO. 5794

CORRECTED FILING RECEIPT

30589
DUNLAP CODDING, P.C.
PO BOX 16370
OKLAHOMA CITY, OK 73113

Date Mailed: 08/18/2011

Receipt is acknowledged of this non-provisional patent application. The application will be taken up for examination in due course. Applicant will be notified as to the results of the examination. Any correspondence concerning the application must include the following identification information: the U.S. APPLICATION NUMBER, FILING DATE, NAME OF APPLICANT, and TITLE OF INVENTION. Fees transmitted by check or draft are subject to collection. Please verify the accuracy of the data presented on this receipt. **If an error is noted on this Filing Receipt, please submit a written request for a Filing Receipt Correction. Please provide a copy of this Filing Receipt with the changes noted thereon. If you received a "Notice to File Missing Parts" for this application, please submit any corrections to this Filing Receipt with your reply to the Notice. When the USPTO processes the reply to the Notice, the USPTO will generate another Filing Receipt incorporating the requested corrections**

Applicant(s)

Gary A. Olsen, Puyallup, WA;
John C. Stuever, Savannah, TX;
Susan C. Stuever, Savannah, TX;

Power of Attorney: The patent practitioners associated with Customer Number 30589

Domestic Priority data as claimed by applicant

This application is a CIP of 11/714,574 03/06/2007 ABN
and is a CIP of 11/522,849 09/18/2006 ABN
which is a CON of 10/792,252 03/03/2004 ABN
which is a CON of 10/280,708 10/24/2002 PAT 6,719,879
which is a CON of 10/022,086 12/18/2001 ABN
which is a CON of 09/754,754 01/04/2001 ABN
which is a CON of 09/400,243 09/21/1999 ABN
which is a CON of 08/861,333 05/21/1997 ABN

Foreign Applications (You may be eligible to benefit from the **Patent Prosecution Highway** program at the USPTO. Please see http://www.uspto.gov for more information.)

Permission to Access - A proper **Authorization to Permit Access to Application by Participating Offices** (PTO/SB/39 or its equivalent) has been received by the USPTO.

If Required, Foreign Filing License Granted: 04/06/2009

The country code and number of your priority application, to be used for filing abroad under the Paris Convention, is **US 12/406,638**

Projected Publication Date: Not Applicable

Non-Publication Request: No

Early Publication Request: No
**** SMALL ENTITY ****
Title

PARTICULATE MATTER AND METHODS OF OBTAINING SAME FROM A KRAFT WASTE RECLAMATION

Preliminary Class

423

PROTECTING YOUR INVENTION OUTSIDE THE UNITED STATES

Since the rights granted by a U.S. patent extend only throughout the territory of the United States and have no effect in a foreign country, an inventor who wishes patent protection in another country must apply for a patent in a specific country or in regional patent offices. Applicants may wish to consider the filing of an international application under the Patent Cooperation Treaty (PCT). An international (PCT) application generally has the same effect as a regular national patent application in each PCT-member country. The PCT process **simplifies** the filing of patent applications on the same invention in member countries, but **does not result** in a grant of "an international patent" and does not eliminate the need of applicants to file additional documents and fees in countries where patent protection is desired.

Almost every country has its own patent law, and a person desiring a patent in a particular country must make an application for patent in that country in accordance with its particular laws. Since the laws of many countries differ in various respects from the patent law of the United States, applicants are advised to seek guidance from specific foreign countries to ensure that patent rights are not lost prematurely.

Applicants also are advised that in the case of inventions made in the United States, the Director of the USPTO must issue a license before applicants can apply for a patent in a foreign country. The filing of a U.S. patent application serves as a request for a foreign filing license. The application's filing receipt contains further information and guidance as to the status of applicant's license for foreign filing.

Applicants may wish to consult the USPTO booklet, "General Information Concerning Patents" (specifically, the section entitled "Treaties and Foreign Patents") for more information on timeframes and deadlines for filing foreign patent applications. The guide is available either by contacting the USPTO Contact Center at 800-786-9199, or it can be viewed on the USPTO website at http://www.uspto.gov/web/offices/pac/doc/general/index.html.

For information on preventing theft of your intellectual property (patents, trademarks and copyrights), you may wish to consult the U.S. Government website, http://www.stopfakes.gov. Part of a Department of Commerce initiative, this website includes self-help "toolkits" giving innovators guidance on how to protect intellectual property in specific countries such as China, Korea and Mexico. For questions regarding patent enforcement issues, applicants may call the U.S. Government hotline at 1-866-999-HALT (1-866-999-4158).

LICENSE FOR FOREIGN FILING UNDER

Title 35, United States Code, Section 184

Title 37, Code of Federal Regulations, 5.11 & 5.15

GRANTED

The applicant has been granted a license under 35 U.S.C. 184, if the phrase "IF REQUIRED, FOREIGN FILING LICENSE GRANTED" followed by a date appears on this form. Such licenses are issued in all applications where the conditions for issuance of a license have been met, regardless of whether or not a license may be required as set forth in 37 CFR 5.15. The scope and limitations of this license are set forth in 37 CFR 5.15(a) unless an earlier license has been issued under 37 CFR 5.15(b). The license is subject to revocation upon written notification. The date indicated is the effective date of the license, unless an earlier license of similar scope has been granted under 37 CFR 5.13 or 5.14.

This license is to be retained by the licensee and may be used at any time on or after the effective date thereof unless it is revoked. This license is automatically transferred to any related applications(s) filed under 37 CFR 1.53(d). This license is not retroactive.

The grant of a license does not in any way lessen the responsibility of a licensee for the security of the subject matter as imposed by any Government contract or the provisions of existing laws relating to espionage and the national security or the export of technical data. Licensees should apprise themselves of current regulations especially with respect to certain countries, of other agencies, particularly the Office of Defense Trade Controls, Department of State (with respect to Arms, Munitions and Implements of War (22 CFR 121-128)); the Bureau of Industry and Security, Department of Commerce (15 CFR parts 730-774); the Office of Foreign AssetsControl, Department of Treasury (31 CFR Parts 500+) and the Department of Energy.

NOT GRANTED

No license under 35 U.S.C. 184 has been granted at this time, if the phrase "IF REQUIRED, FOREIGN FILING LICENSE GRANTED" DOES NOT appear on this form. Applicant may still petition for a license under 37 CFR 5.12, if a license is desired before the expiration of 6 months from the filing date of the application. If 6 months has lapsed from the filing date of this application and the licensee has not received any indication of a secrecy order under 35 U.S.C. 181, the licensee may foreign file the application pursuant to 37 CFR 5.15(b).

UNITED STATES PATENT AND TRADEMARK OFFICE

Commissioner for Patents
United States Patent and Trademark Office
P.O. Box 1450
Alexandria, VA 22313-1450
www.uspto.gov

BOZICEVIC, FIELD & FRANCIS LLP
1900 UNIVERSITY AVENUE
SUITE 200
EAST PALO ALTO CA 94303

MAILED

MAY 13 2011

OFFICE OF PETITIONS

In re Application of	:	
Shimon Weiss et al	:	
Application No. 12/406,651	:	DECISION GRANTING PETITION
Filed: March 18, 2009	:	UNDER 37 CFR 1.313(c)(2)
Attorney Docket No. LBLB-002CIPCON4	:	

This is a decision on the petition under 37 CFR 1.313(c)(2), filed May 12, 2011, to withdraw the above-identified application from issue after payment of the issue fee.

The petition is **GRANTED**.

The above-identified application is withdrawn from issue for consideration of a submission under 37 CFR 1.114 (request for continued examination). *See* 37 CFR 1.313(c)(2).

Petitioner is advised that the issue fee paid on April 5, 2011 cannot be refunded. If, however, this application is again allowed, petitioner may request that it be applied towards the issue fee required by the new Notice of Allowance.[1]

Telephone inquiries should be directed to the undersigned at (571) 272-3208.

This application is being referred to Technology Center AU 1631 for processing of the request for continued examination under 37 CFR 1.114 and for consideration of the concurrently filed IDS.

/Karen Creasy/
Karen Creasy
Petitions Examiner
Office of Petitions

[1] *The request to apply the issue fee to the new Notice may be satisfied by completing and returning the new Part B – Fee(s) Transmittal Form (along with any balance due at the time of submission). Petitioner is advised that the Issue Fee Transmittal Form must be completed and timely submitted to avoid abandonment of the application.*

UNITED STATES PATENT AND TRADEMARK OFFICE

Commissioner for Patents
United States Patent and Trademark Office
P.O. Box 1450
Alexandria, VA 22313-1450
www.uspto.gov

Decision Date : December 19, 2011

In re Application of :

SHIMON WEISS

DECISION ON PETITION

UNDER CFR 1.313(c)(2)

Application No : 12406651

Filed : 18-Mar-2009

Attorney Docket No : LBNL.048P1C4

This is an electronic decision on the petition under 37 CFR 1.313(c)(2), filed December 19, 201,1to withdraw the above-identified application from issue after payment of the issue fee.

The petition is **GRANTED.**

The above-identified application is withdrawn from issue for consideration of a submission under 37 CFR 1.114 (request for continued examination). See 37 CFR 1.313(c)(2).

Petitioner is advised that the issue fee paid in this application cannot be refunded. If, however, this application is again allowed, petitioner may request that it be applied towards the issue fee required by the new Notice of Allowance.

Telephone inquiries concerning this decision should be directed to the Patent Electronic Business Center (EBC) at 866-217-9197.

This application file is being referred to Technology Center AU 1631 for processing of the request for continuing examination under 37 CFR 1.114 .

Office of Petitions

Doc Code: PET.AUTO Document Description: Petition automatically granted by EFS-Web	PTO/SB/140 U.S. Patent and Trademark Office Department of Commerce

Electronic Petition Request	**PETITION TO WITHDRAW AN APPLICATION FROM ISSUE AFTER PAYMENT OF THE ISSUE FEE UNDER 37 CFR 1.313(c)**
Application Number	12406651
Filing Date	18-Mar-2009
First Named Inventor	SHIMON WEISS
Art Unit	1631
Examiner Name	ERIC DEJONG
Attorney Docket Number	LBNL.048P1C4
Title	SEMICONDUCTOR NANOCRYSTAL PROBES FOR BIOLOGICAL APPLICATIONS AND PROCESS FOR MAKING AND USING SUCH PROBES

An application may be withdrawn from issue for further action upon petition by the applicant. To request that the Office withdraw an application from issue, applicant must file a petition under this section including the fee set forth in § 1.17(h) and a showing of good and sufficient reasons why withdrawal of the application from issue is necessary.

APPLICANT HEREBY PETITIONS TO WITHDRAW THIS APPLICATION FROM ISSUE UNDER 37 CFR 1.313(c).

A grantable petition requires the following items:
(1) Petition fee; and
(2) One of the following reasons:
(a) Unpatentability of one or more claims, which must be accompanied by an unequivocal statement that one or more claims are unpatentable, an amendment to such claim or claims, and an explanation as to how the amendment causes such claim or claims to be patentable;
(b) Consideration of a request for continued examination in compliance with § 1.114 (for a utility or plant application only); or
(c) Express abandonment of the application. Such express abandonment may be in favor of a continuing application, but not a CPA under 37 CFR 1.53(d).

Petition Fee

☐ Applicant claims SMALL ENTITY status. See 37 CFR 1.27.

☐ Applicant is no longer claiming SMALL ENTITY status. See 37 CFR 1.27(g)(2).

☐ Applicant(s) status remains as SMALL ENTITY.

☒ Applicant(s) status remains as other than SMALL ENTITY

Reason for withdrawal from issue

○ One or more claims are unpatentable ◉ Consideration of a request for continued examination (RCE) (List of Required Documents and Fees) ○ Applicant hereby expressly abandons the instant application (any attorney/agent signing for this reason must have power of attorney pursuant to 37 CFR 1.32(b)).	
RCE request,submission, and fee. ☒ I certify, in accordance with 37 CFR 1.4(d)(4) that : The RCE request ,submission, and fee have already been filed in the above-identified application on 2011.12.19 ☐ Are attached.	
THIS PORTION MUST BE COMPLETED BY THE SIGNATORY OR SIGNATORIES I certify, in accordance with 37 CFR 1.4(d)(4) that I am: ◉ An attorney or agent registered to practice before the Patent and Trademark Office who has been given power of attorney in this application. ○ An attorney or agent registered to practice before the Patent and Trademark Office, acting in a representative capacity. ○ A sole inventor ○ A joint inventor; I certify that I am authorized to sign this submission on behalf of all of the inventors ○ A joint inventor; all of whom are signing this e-petition ○ The assignee of record of the entire interest that has properly made itself of record pursuant to 37 CFR 3.71	
Signature	/Michael L Fuller/
Name	Michael L. Fuller
Registration Number	36516

UNITED STATES PATENT AND TRADEMARK OFFICE

Commissioner for Patents
United States Patent and Trademark Office
P.O. Box 1450
Alexandria, VA 22313-1450
www.uspto.gov

HONEYWELL INTERNATIONAL INC.
PATENT SERVICES
101 COLUMBIA ROAD
P.O. BOX 2245
MORRISTOWN, NJ 07962-2245

MAILED
MAY 23 2011
OFFICE OF PETITIONS

In re Application of :
Daniel C. Merkel et al :
Application No. 12/406,653 : DECISION ON PETITION
Filed: March 18, 2009 : UNDER 37 CFR 1.78(a)(3)
Attorney Docket No. H0019255-4511 :

This is a decision on the petition filed January 31, 2011 under 37 CFR 1.78(a)(3), to accept an unintentionally delayed claim under 35 U.S.C. § 120 for the benefit of priority to the prior-filed nonprovisional application set forth in the amendment filed with the petition.

The petition is **GRANTED**.

A petition for acceptance of a claim for late priority under 37 CFR 1.78(a)(3) is only applicable to those applications filed on or after November 29, 2000. Further, the petition is appropriate only after the expiration of the period specified in 37 CFR 1.78(a)(2)(ii). In addition, the petition under 37 CFR 1.78(a)(3) must be accompanied by:

(1) the reference required by 35 U.S.C. § 120 and 37 CFR 1.78(a)(2)(i) of the prior-filed application, unless previously submitted;
(2) the surcharge set forth in § 1.17(t); and
(3) a statement that the entire delay between the date the claim was due under 37 CFR 1.78(a)(2)(ii) and the date the claim was filed was unintentional. The Director may require additional information where there is a question whether the delay was unintentional.

All of the above requirements having been satisfied, the late claim for priority under 35 U.S.C. § 120 is accepted as being unintentionally delayed.

The granting of the petition to accept the delayed benefit claim to the prior-filed application under 37 CFR 1.78(a)(3) should not be construed as meaning that this application is entitled to the benefit of the prior-filed application. In order for this application to be entitled to the benefit of the prior-filed application, all other requirements under 35 U.S.C. § 120 and 37

CFR 1.78(a)(1) and (a)(2) must be met. Similarly, the fact that the corrected Filing Receipt accompanying this decision on petition includes the prior-filed application should not be construed as meaning that applicant is entitled to the claim for benefit of priority to the prior-filed application noted thereon. Accordingly, the examiner will, in due course, consider this benefit claim and determine whether the application is entitled to the benefit of the earlier filing date.

A corrected Filing Receipt, which includes the priority claim to the prior-filed nonprovisional application, accompanies this decision on petition.

Any inquiries concerning this decision may be directed to Irvin Dingle at (571) 272-3210. All other inquiries concerning either the examination procedures or status of the application should be directed to the Technology Center.

This matter is being referred to Technology Center Art Unit 1765 for consideration by the examiner of applicant's entitlement to claim benefit of priority under 35 U.S.C. § 120 to the prior-filed application.

David Bucci
Petition Examiner
Office of Petitions

ATTACHMENT: Corrected Filing Receipt

UNITED STATES PATENT AND TRADEMARK OFFICE

UNITED STATES DEPARTMENT OF COMMERCE
United States Patent and Trademark Office
Address: COMMISSIONER FOR PATENTS
P.O. Box 1450
Alexandria, Virginia 22313-1450
www.uspto.gov

APPLICATION NUMBER	FILING or 371(c) DATE	GRP ART UNIT	FIL FEE REC'D	ATTY.DOCKET.NO	TOT CLAIMS	IND CLAIMS
12/406,653	03/18/2009	1765	1570	H0019255-4511	25	4

CONFIRMATION NO. 5825

CORRECTED FILING RECEIPT

128
HONEYWELL INTERNATIONAL INC.
PATENT SERVICES
101 COLUMBIA ROAD
P O BOX 2245
MORRISTOWN, NJ 07962-2245

Date Mailed: 05/23/2011

Receipt is acknowledged of this non-provisional patent application. The application will be taken up for examination in due course. Applicant will be notified as to the results of the examination. Any correspondence concerning the application must include the following identification information: the U.S. APPLICATION NUMBER, FILING DATE, NAME OF APPLICANT, and TITLE OF INVENTION. Fees transmitted by check or draft are subject to collection. Please verify the accuracy of the data presented on this receipt. **If an error is noted on this Filing Receipt, please submit a written request for a Filing Receipt Correction. Please provide a copy of this Filing Receipt with the changes noted thereon. If you received a "Notice to File Missing Parts" for this application, please submit any corrections to this Filing Receipt with your reply to the Notice. When the USPTO processes the reply to the Notice, the USPTO will generate another Filing Receipt incorporating the requested corrections**

Applicant(s)

DANIEL C. MERKEL, West Seneca, NY;
Konstantin A. Pokrovski, Orchard Park, NY;
Hsuehsung Tung, Getzville, NY;
Hang T. Pham, Amherst, NY;
Rajiv R. Singh, Getzville, NY;

Power of Attorney: The patent practitioners associated with Customer Number 000128

Domestic Priority data as claimed by applicant

This appln claims benefit of 61/043,451 04/09/2008
and is a CIP of 11/619,592 01/03/2007

Foreign Applications (You may be eligible to benefit from the **Patent Prosecution Highway** program at the USPTO. Please see http://www.uspto.gov for more information.)

Permission to Access - A proper **Authorization to Permit Access to Application by Participating Offices** (PTO/SB/39 or its equivalent) has been received by the USPTO.

If Required, Foreign Filing License Granted: 05/21/2011

The country code and number of your priority application, to be used for filing abroad under the Paris Convention, is **US 12/406,653**

Projected Publication Date: Not Applicable

Non-Publication Request: No

Early Publication Request: No

Title

AZEOTROPIC COMPOSITIONS OF 2-CHLORO-3,3,3-TRIFLUOROPROPENE (HCFC-1233xf), 2-CHLORO-1,1,1,2-TETRAFLUOROPROPANE (HCFC-244bb), AND HYDROGEN FLUORIDE (HF)

Preliminary Class

252

PROTECTING YOUR INVENTION OUTSIDE THE UNITED STATES

Since the rights granted by a U.S. patent extend only throughout the territory of the United States and have no effect in a foreign country, an inventor who wishes patent protection in another country must apply for a patent in a specific country or in regional patent offices. Applicants may wish to consider the filing of an international application under the Patent Cooperation Treaty (PCT). An international (PCT) application generally has the same effect as a regular national patent application in each PCT-member country. The PCT process **simplifies** the filing of patent applications on the same invention in member countries, but **does not result** in a grant of "an international patent" and does not eliminate the need of applicants to file additional documents and fees in countries where patent protection is desired.

Almost every country has its own patent law, and a person desiring a patent in a particular country must make an application for patent in that country in accordance with its particular laws. Since the laws of many countries differ in various respects from the patent law of the United States, applicants are advised to seek guidance from specific foreign countries to ensure that patent rights are not lost prematurely.

Applicants also are advised that in the case of inventions made in the United States, the Director of the USPTO must issue a license before applicants can apply for a patent in a foreign country. The filing of a U.S. patent application serves as a request for a foreign filing license. The application's filing receipt contains further information and guidance as to the status of applicant's license for foreign filing.

Applicants may wish to consult the USPTO booklet, "General Information Concerning Patents" (specifically, the section entitled "Treaties and Foreign Patents") for more information on timeframes and deadlines for filing foreign patent applications. The guide is available either by contacting the USPTO Contact Center at 800-786-9199, or it can be viewed on the USPTO website at http://www.uspto.gov/web/offices/pac/doc/general/index.html.

For information on preventing theft of your intellectual property (patents, trademarks and copyrights), you may wish to consult the U.S. Government website, http://www.stopfakes.gov. Part of a Department of Commerce initiative, this website includes self-help "toolkits" giving innovators guidance on how to protect intellectual property in specific countries such as China, Korea and Mexico. For questions regarding patent enforcement issues, applicants may call the U.S. Government hotline at 1-866-999-HALT (1-866-999-4158).

LICENSE FOR FOREIGN FILING UNDER

Title 35, United States Code, Section 184

Title 37, Code of Federal Regulations, 5.11 & 5.15

GRANTED

The applicant has been granted a license under 35 U.S.C. 184, if the phrase "IF REQUIRED, FOREIGN FILING LICENSE GRANTED" followed by a date appears on this form. Such licenses are issued in all applications where

the conditions for issuance of a license have been met, regardless of whether or not a license may be required as set forth in 37 CFR 5.15. The scope and limitations of this license are set forth in 37 CFR 5.15(a) unless an earlier license has been issued under 37 CFR 5.15(b). The license is subject to revocation upon written notification. The date indicated is the effective date of the license, unless an earlier license of similar scope has been granted under 37 CFR 5.13 or 5.14.

This license is to be retained by the licensee and may be used at any time on or after the effective date thereof unless it is revoked. This license is automatically transferred to any related applications(s) filed under 37 CFR 1.53(d). This license is not retroactive.

The grant of a license does not in any way lessen the responsibility of a licensee for the security of the subject matter as imposed by any Government contract or the provisions of existing laws relating to espionage and the national security or the export of technical data. Licensees should apprise themselves of current regulations especially with respect to certain countries, of other agencies, particularly the Office of Defense Trade Controls, Department of State (with respect to Arms, Munitions and Implements of War (22 CFR 121-128)); the Bureau of Industry and Security, Department of Commerce (15 CFR parts 730-774); the Office of Foreign AssetsControl, Department of Treasury (31 CFR Parts 500+) and the Department of Energy.

NOT GRANTED

No license under 35 U.S.C. 184 has been granted at this time, if the phrase "IF REQUIRED, FOREIGN FILING LICENSE GRANTED" DOES NOT appear on this form. Applicant may still petition for a license under 37 CFR 5.12, if a license is desired before the expiration of 6 months from the filing date of the application. If 6 months has lapsed from the filing date of this application and the licensee has not received any indication of a secrecy order under 35 U.S.C. 181, the licensee may foreign file the application pursuant to 37 CFR 5.15(b).

UNITED STATES PATENT AND TRADEMARK OFFICE

UNITED STATES DEPARTMENT OF COMMERCE
United States Patent and Trademark Office
Address: COMMISSIONER FOR PATENTS
P.O. Box 1450
Alexandria, Virginia 22313-1450
www.uspto.gov

APPLICATION NO.	FILING DATE	FIRST NAMED INVENTOR	ATTORNEY DOCKET NO.	CONFIRMATION NO.
12/406,663	03/18/2009	Kohsuke HARADA	430.0162USU	5842

7590 10/31/2011

Charles N.J. Ruggiero, Esq.
Ohlandt, Greeley, Ruggiero & Perle, L.L.P.
One Landmark Square, 10th Floor
Stamford, CT 06901-2682

EXAMINER	
GAFFIN, JEFFREY A	
ART UNIT	PAPER NUMBER
2117	
MAIL DATE	DELIVERY MODE
10/31/2011	PAPER

DECISION GRANTING PETITION UNDER 37 CFR 1.138(d)

The declaration of express abandonment is recognized

This is in response to the petition under 37 CFR 1.138(d), requesting for a refund of any previously paid search fee and excess claims fee in the above-identified application.

The petition is granted.

The express abandonment is recognized. Any previously paid search fee and excess claims fee are hereby refunded.

Telephone inquiries should be directed to the Office of Data Management at (571) 272-4200.

Patent Publication Branch
Office of Data Management

PALM INTRANET

Day : Monday
Date: 2/28/2011
Time: 14:39:07

Inventor Name Search

Enter the first few letters of the Inventor's Last Name.
Additionally, enter the first few letters of the Inventor's First name.

Last Name	First Name	
HAWKINS	JOHN	Search

To go back use Back button on your browser toolbar.

Back to PALM | ASSIGNMENT | OASIS | Home page

UNITED STATES PATENT AND TRADEMARK OFFICE

Commissioner for Patents
United States Patent and Trademark Office
P.O. Box 1450
Alexandria, VA 22313-1450
www.uspto.gov

HOLME ROBERTS & OWEN LLP
1700 LINCOLN STREET
SUITE 4100
DENVER CO 80203

MAILED

AUG 18 2010

OFFICE OF PETITIONS

In re Application of	:	
Arthur J. Emanuele	:	DECISION ON PETITION
Application No. 12/406,818	:	TO WITHDRAW
Filed: March 18, 2009	:	FROM RECORD
Attorney Docket No. 54525-10001	:	

This is a decision on the renewed Request to Withdraw as attorney or agent of record under 37 C.F.R. § 1.36(b), filed August 5, 2010.

The request is **APPROVED**.

A grantable request to withdraw as attorney/agent of record must be signed by every attorney/agent seeking to withdraw or contain a clear indication that one attorney is signing on behalf of another/others. The Office will require the practitioner(s) to certify that he, she or they have: (1) given reasonable notice to the client, prior to the expiration of the reply period, which the practitioner(s) intends to withdraw from employment; (2) delivered to the client or a duly authorized representative of the client all papers and property (including funds) to which the client is entitled; and (3) notified the client of any replies that may be due and the time frame within which the client must respond, pursuant to 37 CFR 10.40 (c).

The request was signed by Mark L. Yaskanin on behalf of all attorneys of record who are associated with Customer No. 79362.

All attorneys/agents associated with Customer Number 79362 have been withdrawn. Applicant is reminded that there is no attorney of record at this time.

All future correspondence will be directed to the applicant at the address indicated below.

Currently, there is no outstanding Office action that requires a reply.

Telephone inquires concerning this decision should be directed to the undersigned at (571) 272-7751. All other inquires concerning either the examination or status of the application should be directed to the Technology Center.

Joan Olszewski

Joan Olszewski
Petitions Examiner
Office of Petitions

cc: Arthur J. Emanuele
2425 East Camelback Rd., Suite 270
Phoenix, AZ 85016

UNITED STATES PATENT AND TRADEMARK OFFICE

Commissioner for Patents
United States Patent and Trademark Office
P.O. Box 1450
Alexandria, VA 22313-1450
www.uspto.gov

CISCO SYSTEMS, INC.
SCIENTIFIC-ATLANTA, INC.
SA/CISCO IP DEPT.
5030 SUGARLOAF PARKWAY
LAWRENCEVILLE GA 30044

MAILED

DEC 13 2011

OFFICE OF PETITIONS

In re Application of :
Viveganandhan, et al. : DECISION ON PETITION
Application No. 12/406,857 :
Filed: March 18, 2009 :
Atty. Dkt. No.: 959039 :

This decision is in response to the petition under 37 CFR 1.137(b), filed November 29, 2011.

The petition is **GRANTED**.

The application became abandoned July 20, 2011 for failure to timely submit a proper reply to the non-final Office action mailed April 19, 2011. Notice of Abandonment was mailed November 8, 2011.

A grantable petition pursuant to 37 C.F.R. § 1.137(b) must be accompanied by: (1) the required reply to the outstanding Office action or notice, unless previously filed; (2) the petition fee as set forth in 37 C.F.R. § 1.17(m); (3) a statement that the entire delay in filing the required reply from the due date for the reply until the filing of a grantable petition pursuant to 37 C.F.R. § 1.137(b) was unintentional; and (4) any terminal disclaimer (and fee set forth in 37 C.F.R. § 1.20(d)) required pursuant to 37 C.F.R. § 1.137(c).

The petition satisfies the requirements of 37 CFR 1.137(b) in that petitioner has supplied (1) the required reply in the form of a continuing application under 37 CFR 1.53(b); (2) the required petition fee; and (3) a proper statement of unintentional delay.

There is no indication that the petition is signed by a registered patent attorney or patent agent of record. However, in accordance with 37 CFR 1.34, practitioner's signature appearing on the correspondence shall constitute a representation to the United States Patent and Trademark Office that he is authorized to represent the particular party in whose behalf he acts. If practitioner desires to receive correspondence regarding this file, the appropriate power of attorney documents must be submitted. A courtesy copy of this decision is being mailed to practitioner, the petitioner herein. However, until otherwise instructed, all future correspondence regarding this application file will be directed solely to the above-noted correspondence address of record.

The above-identified application has been carefully reviewed and found in compliance with the previsions set forth above.

This application is being forwarded to Group Art Unit 2445 for further processing.

Telephone inquiries concerning this decision should be directed to the undersigned at (571) 272-3205.

/ALESIA M. BROWN/

Alesia M. Brown
Attorney Advisor
Office of Petitions

CC: MARK WILSON
Wilson and Ham
1811 Santa Rita Road
Suite 130
Pleasanton, CA 94566

I hereby certify that this correspondence is being filed via EFS-Web with the United States Patent and Trademark Office on March 10, 2011.

TOWNSEND and TOWNSEND and CREW LLP

By: /Peggy Smiley/
Peggy Smiley

PATENT
Docket No.: 017018-008010US
Client Ref. No.: VS-0157-US-2

IN THE UNITED STATES PATENT AND TRADEMARK OFFICE

In re application of:	Confirmation No.: 6221
Mark D. Dankberg	Examiner: Yao, Kwang Bin
Application No.: 12/406,861	Art Unit: 2473
Filed: March 18, 2009	PETITION TO MAKE SPECIAL PURSUANT TO 37 C.F.R. §1.102
For: ADAPTIVE USE OF SATELLITE UPLINK BANDS	
Customer No.: 61668	

Commissioner for Patents
P.O. Box 1450
Alexandria, VA 22313-1450

Sir:

Applicant hereby petitions the Commissioner to make special the above-identified application in accordance with the Patent Application Backlog Reduction Stimulus Plan, as most recently published in the Federal Register on November 22, 2010 at 75 Fed. Reg. 71072, pursuant to 37 C.F.R. §1.102. Applicant states the following:

a) the basis under which special status is being sought is express abandonment of another copending application, pursuant to the Patent Application Backlog Reduction Stimulus Plan;

b) a copy of the letter of express abandonment and the statements accompanying the letter of express abandonment from the copending application that is expressly abandoned, as filed with the USPTO, is attached as exhibit A;

c) both the instant application and the expressly abandoned application are currently commonly assigned to ViaSat, Inc., and were so assigned prior to October 1, 2009;

d) the application that is expressly abandoned is application serial number 12/571,281, which was filed on September 30, 2009;

e) applicant hereby certifies that applicant has not filed petitions in more than fourteen other applications requesting special status under the Patent Application Backlog Reduction Stimulus Plan program; and

f) applicant hereby agrees to make an election without traverse in a telephonic interview if the Office determines that the claims of the instant application are directed to two or more independent and distinct inventions.

Below are the applications involved in this Patent Application Exchange Program transaction. Please notify the undersigned immediately if you notice any inconsistencies between this information and the information on file.

Application being Advanced	Application being Abandoned
Serial Number: 12/406,861	Serial Number: 12/571,281
Title: ADAPTIVE USE OF SATELLITE UPLINK BANDS	Title: METHODS AND SYSTEMS FOR IMPLEMENTING URL MASKING
First Named Inventor: Mark D. Dankberg	First Named Inventor: William B. Sebastian
Filing Date: March 18, 2009	Filing Date: September 30, 2009
Attorney Docket: 017018-008010US	Attorney Docket: 017018-019610US
Client Docket: VS-0157-US-2	Client Docket: VS-0339-US-2

Pursuant to the conditions for being accorded special status for examination under the Patent Application Backlog Stimulus Reduction Plan, applicant believes no fee is required for the instant petition. Applicant respectfully requests that this petition to make special pursuant to 37 C.F.R. §1.102 be granted.

Respectfully submitted,

/Kelvin B. Catmull/

Kelvin B. Catmull
Reg. No. 57,535

KILPATRICK TOWNSEND & STOCKTON LLP
Two Embarcadero Center, Eighth Floor
San Francisco, California 94111-3834
Tel: (415) 576-0200
Fax: (415) 576-0300
KBC:m6s
63191497 v1

EXHIBIT A

Mailroom date of March 10, 2011 as downloaded from PAIR

Electronic Acknowledgement Receipt

EFS ID:	9635456
Application Number:	12571281
International Application Number:	
Confirmation Number:	1698
Title of Invention:	METHODS AND SYSTEMS FOR IMPLEMENTING URL MASKING
First Named Inventor/Applicant Name:	William B. Sebastian
Customer Number:	61668
Filer:	Kelvin B. Catmull
Filer Authorized By:	
Attorney Docket Number:	017018-019610US
Receipt Date:	10-MAR-2011
Filing Date:	30-SEP-2009
Time Stamp:	18:32:51
Application Type:	Utility under 35 USC 111(a)

Payment information:

Submitted with Payment	no

File Listing:

Document Number	Document Description	File Name	File Size(Bytes)/ Message Digest	Multi Part /.zip	Pages (if appl.)
1	Letter Express Abandonment of the application	Statement_of_Abandonment.pdf	82631 034ccf5c2cd94cdf1bac6ea0be686f506b3d6403	no	2

Warnings:	
Information:	

2	Letter Express Abandonment of the application	Express_Abandonment.pdf	80659 e57abe84dc66306b45c70dedfb285f4f50cadb3b	no	1

Warnings:	
Information:	
Total Files Size (in bytes):	163290

This Acknowledgement Receipt evidences receipt on the noted date by the USPTO of the indicated documents, characterized by the applicant, and including page counts, where applicable. It serves as evidence of receipt similar to a Post Card, as described in MPEP 503.

New Applications Under 35 U.S.C. 111

If a new application is being filed and the application includes the necessary components for a filing date (see 37 CFR 1.53(b)-(d) and MPEP 506), a Filing Receipt (37 CFR 1.54) will be issued in due course and the date shown on this Acknowledgement Receipt will establish the filing date of the application.

National Stage of an International Application under 35 U.S.C. 371

If a timely submission to enter the national stage of an international application is compliant with the conditions of 35 U.S.C. 371 and other applicable requirements a Form PCT/DO/EO/903 indicating acceptance of the application as a national stage submission under 35 U.S.C. 371 will be issued in addition to the Filing Receipt, in due course.

New International Application Filed with the USPTO as a Receiving Office

If a new international application is being filed and the international application includes the necessary components for an international filing date (see PCT Article 11 and MPEP 1810), a Notification of the International Application Number and of the International Filing Date (Form PCT/RO/105) will be issued in due course, subject to prescriptions concerning national security, and the date shown on this Acknowledgement Receipt will establish the international filing date of the application.

I hereby certify that this correspondence is being filed via EFS-Web with the United States Patent and Trademark Office on March 10, 2011.

TOWNSEND and TOWNSEND and CREW LLP

By: /Peggy Smiley/
Peggy Smiley

PATENT
Docket No.: 017018-019610US
Client Ref. No.: VS-0339-US-2

IN THE UNITED STATES PATENT AND TRADEMARK OFFICE

In re application of:	Confirmation No.: 1698
William B. Sebastian	Examiner: Not Yet Assigned
Application No.: 12/571,281	Art Unit: 2189
Filed: September 30, 2009	STATEMENT PURSUANT TO PATENT APPLICATION BACKLOG REDUCTION STIMULUS PLAN
For: METHODS AND SYSTEMS FOR IMPLEMENTING URL MASKING	
Customer No.: 61668	

Commissioner for Patents
P.O. Box 1450
Alexandria, VA 22313-1450

Commissioner:

Pursuant to the Patent Application Backlog Reduction Stimulus Plan, as most recently published in the Federal Register on November 22, 2010 at 75 Fed. Reg. 71072, applicant hereby expressly abandons the instant application. A petition for express abandonment of the instant application pursuant to 37 C.F.R. §1.138(a) is filed concurrently with this paper. Pursuant to the requirements of the Patent Application Backlog Reduction Stimulus Plan, applicant hereby makes the following statements:

a) applicant has not and will not file an application that claims the benefit of the instant expressly abandoned application under any provision of Title 35, United States Code;

b) applicant agrees not to request a refund of any fees paid in the instant expressly abandoned application; and

c) applicant has not and will not file a new application that claims the same invention claimed in the instant expressly abandoned application.

Below are the applications involved in this Patent Application Exchange Program transaction. Please notify the undersigned immediately if you notice any inconsistencies between this information and the information on file.

Application being Advanced	Application being Abandoned
Serial Number: 12/406,861	Serial Number: 12/571,281
Title: ADAPTIVE USE OF SATELLITE UPLINK BANDS	Title: METHODS AND SYSTEMS FOR IMPLEMENTING URL MASKING
First Named Inventor: Mark D. Dankberg	First Named Inventor: William B. Sebastian
Filing Date: March 18, 2009	Filing Date: September 30, 2009
Attorney Docket: 017018-008010US	Attorney Docket: 017018-019610US
Client Docket: VS-0157-US-2	Client Docket: VS-0339-US-2

Respectfully submitted,

/Kelvin B. Catmull/

Kelvin B. Catmull
Reg. No. 57,535

TOWNSEND and TOWNSEND and CREW LLP
Two Embarcadero Center, Eighth Floor
San Francisco, California 94111-3834
Tel: (415) 576-0200
Fax: (415) 576-0300
KBC:m6s
63191032 v1

EXPRESS ABANDONMENT UNDER 37 CFR 1.138

File the petition electronically using EFS-Web
Or **Mail** the petition to:
Mail Stop Express Abandonment
Commissioner for Patents
P.O. Box 1450, Alexandria, VA 22313-1450

Application Number	12/571,281
Filing Date	September 30, 2009
First Named Inventor	Sebastian, William B.
Art Unit	2189
Examiner Name	Not Assigned
Attorney Docket Number	017018-019610US

Please **check only one** of boxes 1 or 2 below:
(*If no box is checked, this paper will be treated as a request for express abandonment as if box 1 is checked.)*

1. ☒ **Express Abandonment**
I request that the above-identified application be expressly abandoned as of the filing date of this paper.

2. ☐ **Express Abandonment in Favor of a Continuing Application**
I request that the above-identified application be expressly abandoned as of the filing date accorded the continuing application filed previously or herewith.

NOTE: A paper requesting express abandonment of an application is not effective unless and until an appropriate USPTO official recognizes and acts on the paper. See the Manual of Patent Examining Procedure (MPEP), section 711.01.

TO AVOID PUBLICATION, PLEASE USE FORM PTO/SB/24A INSTEAD OF THIS FORM.

TO REQUEST A REFUND OF SEARCH FEE AND EXCESS CLAIMS FEE (IF ELIGIBLE), USE FORM PTO/SB/24B INSTEAD OF THIS FORM.

I am the

☐ applicant.

☐ assignee of record of the entire interest. See 37 CFR 3.71.
Statement under 37 CFR 3.73(b) is enclosed. (Form PTO/SB/96)

☒ attorney or agent of record. Attorney or agent registration number is 57,535

☐ attorney or agent acting under 37 CFR 1.34, who is authorized under 37 CFR 1.138(b) because the application is expressly abandoned in favor of a continuing application (box 2 above must be checked). Attorney or agent registration number is _____.

/Kelvin B. Catmull/	March 10, 2011
Signature	Date
Kelvin B. Catmull	650-324-6313
Typed or printed name	Telephone Number

Note: Signatures of all the inventors or assignees of record of the entire interest or their representative(s) are required. Submit multiple forms if more than one signature is required, see below.

☒ Total of 1 forms are submitted.

UNITED STATES PATENT AND TRADEMARK OFFICE

Commissioner for Patents
United States Patent and Trademark Office
P.O. Box 1450
Alexandria, VA 22313-1450
www.uspto.gov

KILPATRICK TOWNSEND & STOCKTON, LLP/VIASAT
VIASAT, INC. (CLIENT #017018)
TWO EMBARCADERO CENTER
8TH FLOOR
SAN FRANCISCO CA 94111

MAILED
MAR 16 2011
OFFICE OF PETITIONS

In re Application of :
DANKBERG, et al. :
Application No. 12/406,861 :
Filed: March 18, 2009 :
Attorney Docket No. **017018-008010US** :

DECISION ON PETITION
TO MAKE SPECIAL
37 CFR 1.102

This is a decision on the petition under 37 CFR 1.102, filed March 10, 2011, to make the above-identified application special under the Patent Application Backlog Reduction Stimulus Plan which is a pilot program set forth at 74 Federal Register Notice 62285 (November 27, 2009) and 75 Federal register Notice 36063 (June 24, 2010).

The petition is **GRANTED**.

A grantable petition to make an application special under 37 CFR 1.102 and the pilot program as set forth in 74 FR 62285 and 75 FR 36063 must be directed to a nonprovisional application filed prior to October 1, 2009.

The USPTO will accord special status for examination under Patent Application Backlog Reduction Stimulus Plan under the following conditions:

(1) The application for which special status is sought is a nonprovisional application that has an actual filing date earlier than October 1, 2009;

(2) The applicant has another copending nonprovisional application that has an actual filing date earlier than October 1, 2009, and is complete under 37 CFR 1.53;

(3) The application for which special status is sought and the other copending nonprovisional application either are owned by the same party as of October 1, 2009, or name at least one inventor in common;

(4) The applicant files a letter of express abandonment under 37 CFR 1.138(a) in the copending nonprovisional application before it has been taken up for examination and

a) includes a statement that the applicant has not and will not file a new application that claims the same invention claimed in the expressly abandoned application;

b) includes a statement that the applicant has not and will not file an application that claims the benefit of the expressly abandoned application under any provision of title 35, United States Code, and

c) includes a statement that the applicant agrees not to request a refund of any fees paid in the expressly abandoned application; and

(5) The applicant files a petition under 37 CFR 1.102 in the application for which special status is sought that

a) includes a specific identification of the relationship between the applications that qualifies the application for special status;

b) identifies, by application number if available, the application that is being expressly abandoned;

c) provides a statement certifying that applicant has not filed petitions in more than fourteen (14) other applications requesting special status under this program; and

d) provides a statement that applicant agrees to make an election without traverse in a telephonic interview if the Office determines that the claims of the application to be made special are directed to two or more independent and distinct inventions.

The requirement for a fee for consideration of the petition to make special for applications pertaining to Patent Application Backlog Reduction Stimulus Plan has been waived.

The instant petition complies with the conditions required under Patent Application Backlog Reduction Stimulus Plan. Accordingly, the above-identified application has been accorded "special" status.

Telephone inquires concerning this decision should be directed to Brian W. Brown at 571-272-5338.

All other inquires concerning either the examination or status of the application should be directed to the Technology Center.

The application is being forwarded to the Office of Patent Application Processing for further processing commensurate with this decision.

Brian W. Brown
Petitions Examiner
Office of Petitions

I hereby certify that this correspondence is being filed via EFS-Web with the United States Patent and Trademark Office on February 4, 2011.

TOWNSEND and TOWNSEND and CREW LLP

By: /Kelly Mak/

PATENT
Docket No.: 017018-008310US
Client Ref. No.: VS-0160-US-2

IN THE UNITED STATES PATENT AND TRADEMARK OFFICE

In re application of:

Mark D. Dankberg et al.

Application No.: 12/406,870

Filed: March 18, 2009

For: FREQUENCY RE-USE FOR SERVICE AND GATEWAY BEAMS

Customer No.: 61668

Confirmation No.: 6238

Examiner: Maung, Nay Aung

Art Unit: 2618

PETITION TO MAKE SPECIAL PURSUANT TO 37 C.F.R. §1.102

Commissioner for Patents
P.O. Box 1450
Alexandria, VA 22313-1450

Sir:

Applicant hereby petitions the Commissioner to make special the above-identified application in accordance with the Patent Application Backlog Reduction Stimulus Plan, as most recently published in the Federal Register on November 22, 2010 at 75 Fed. Reg. 71072, pursuant to 37 C.F.R. §1.102. Applicant states the following:

a) the basis under which special status is being sought is express abandonment of another copending application, pursuant to the Patent Application Backlog Reduction Stimulus Plan;

b) a copy of the letter of express abandonment and the statements accompanying the letter of express abandonment from the copending application that is expressly abandoned, as filed with the USPTO, is attached as exhibit A;

c) both the instant application and the expressly abandoned application are currently commonly assigned to Viasat, Inc., and were so assigned prior to October 1, 2009;

d) the application that is expressly abandoned is application serial number 12/339,601, which was filed on December 19, 2008;

e) applicant hereby certifies that applicant has not filed petitions in more than fourteen other applications requesting special status under the Patent Application Backlog Reduction Stimulus Plan program; and

f) applicant hereby agrees to make an election without traverse in a telephonic interview if the Office determines that the claims of the instant application are directed to two or more independent and distinct inventions.

Below are the applications involved in this Patent Application Exchange Program transaction. Please notify the undersigned immediately if you notice any inconsistencies between this information and the information on file.

Application being Advanced	Application being Abandoned
Serial Number: 12/406,870	Serial Number: 12/339,601
Title: FREQUENCY RE-USE FOR SERVICE AND GATEWAY BEAMS	Title: SYSTEM AND METHODS FOR DETERMINING MOTOR POSITION
First Named Inventor: Dankberg	First Named Inventor: Cathey
Filing Date: 18-Mar-2009	Filing Date: 19-Dec-2008
Attorney Docket: 017018-008310US	Attorney Docket: 017018-018910US
Client Docket: VS-0160-US-2	Client Docket: VS-0252-US-2

Pursuant to the conditions for being accorded special status for examination under the Patent Application Backlog Stimulus Reduction Plan, applicant believes no fee is required for the instant petition. Applicant respectfully requests that this petition to make special pursuant to 37 C.F.R. §1.102 be granted.

Respectfully submitted,

Preetam B. Pagar

Preetam B. Pagar
Reg. No. 57,684

TOWNSEND and TOWNSEND and CREW LLP
Two Embarcadero Center, Eighth Floor
San Francisco, California 94111-3834
Tel: (415) 576-0200
Fax: (415) 576-0300
PBP:pbp

63068006 v1

EXHIBIT A

Mailroom date of February 4, 2011 as downloaded from PAIR

Electronic Acknowledgement Receipt

EFS ID:	9377106
Application Number:	12339601
International Application Number:	
Confirmation Number:	7511
Title of Invention:	System and Methods for Determining Motor Position
First Named Inventor/Applicant Name:	Clinton Cathey
Customer Number:	61668
Filer:	Preetam Baburao Pagar/Kelly Mak
Filer Authorized By:	Preetam Baburao Pagar
Attorney Docket Number:	017018-018910US
Receipt Date:	04-FEB-2011
Filing Date:	19-DEC-2008
Time Stamp:	15:08:19
Application Type:	Utility under 35 USC 111(a)

COPY

Payment information:

Submitted with Payment	no

File Listing:

Document Number	Document Description	File Name	File Size(Bytes)/ Message Digest	Multi Part /.zip	Pages (if appl.)
1	Letter Express Abandonment of the application	017018_018910US_Express_Abandonment.pdf	80444 87f90c2ad6c00b2417fded7c138e66207cd82025	no	1

Warnings:	
Information:	

2	Letter Express Abandonment of the application	017018_018910US_Statement.pdf	82649 9138db2af371e22851143322df8f8f79032bf928	no	2

Warnings:	
Information:	
Total Files Size (in bytes):	163093

This Acknowledgement Receipt evidences receipt on the noted date by the USPTO of the indicated documents, characterized by the applicant, and including page counts, where applicable. It serves as evidence of receipt similar to a Post Card, as described in MPEP 503.

New Applications Under 35 U.S.C. 111
If a new application is being filed and the application includes the necessary components for a filing date (see 37 CFR 1.53(b)-(d) and MPEP 506), a Filing Receipt (37 CFR 1.54) will be issued in due course and the date shown on this Acknowledgement Receipt will establish the filing date of the application.

National Stage of an International Application under 35 U.S.C. 371
If a timely submission to enter the national stage of an international application is compliant with the conditions of 35 U.S.C. 371 and other applicable requirements a Form PCT/DO/EO/903 indicating acceptance of the application as a national stage submission under 35 U.S.C. 371 will be issued in addition to the Filing Receipt, in due course.

New International Application Filed with the USPTO as a Receiving Office
If a new international application is being filed and the international application includes the necessary components for an international filing date (see PCT Article 11 and MPEP 1810), a Notification of the International Application Number and of the International Filing Date (Form PCT/RO/105) will be issued in due course, subject to prescriptions concerning national security, and the date shown on this Acknowledgement Receipt will establish the international filing date of the application.

COPY

PTO/SB/24 (07-09)

EXPRESS ABANDONMENT UNDER 37 CFR 1.138

File the petition electronically using EFS-Web
Or **Mail** the petition to:
Mail Stop Express Abandonment
Commissioner for Patents
P.O. Box 1450, Alexandria, VA 22313-1450

Application Number	12/339,601
Filing Date	December 19, 2008
First Named Inventor	Cathey, Clinton
Art Unit	2858
Examiner Name	Patel, Paresh H.
Attorney Docket Number	017018-018910US

Please **check only one** of boxes 1 or 2 below:
(If no box is checked, this paper will be treated as a request for express abandonment as if box 1 is checked.)

1. ☒ **Express Abandonment**
I request that the above-identified application be expressly abandoned as of the filing date of this paper.

2. ☐ **Express Abandonment in Favor of a Continuing Application**
I request that the above-identified application be expressly abandoned as of the filing date accorded the continuing application filed previously or herewith.

NOTE: A paper requesting express abandonment of an application is not effective unless and until an appropriate USPTO official recognizes and acts on the paper. See the Manual of Patent Examining Procedure (MPEP), section 711.01.

TO AVOID PUBLICATION, PLEASE USE FORM PTO/SB/24A INSTEAD OF THIS FORM.

TO REQUEST A REFUND OF SEARCH FEE AND EXCESS CLAIMS FEE (IF ELIGIBLE), USE FORM PTO/SB/24B INSTEAD OF THIS FORM.

COPY

I am the

☐ applicant.

☐ assignee of record of the entire interest. See 37 CFR 3.71.
Statement under 37 CFR 3.73(b) is enclosed. (Form PTO/SB/96)

☒ attorney or agent of record. Attorney or agent registration number is 57,684

☐ attorney or agent acting under 37 CFR 1.34, who is authorized under 37 CFR 1.138(b) because the application is expressly abandoned in favor of a continuing application (box 2 above must be checked). Attorney or agent registration number is _____.

/Preetam B. Pagar/
Signature

February 4, 2011
Date

Preetam B. Pagar
Typed or printed name

415-576-0200
Telephone Number

Note: Signatures of all the inventors or assignees of record of the entire interest or their representative(s) are required. Submit multiple forms if more than one signature is required, see below.

☒ Total of 1 forms are submitted.

I hereby certify that this correspondence is being filed via EFS-Web with the United States Patent and Trademark Office on February 4, 2011.

TOWNSEND and TOWNSEND and CREW LLP

By: /Kelly Mak/

PATENT
Docket No.: 017018-018910US
Client Ref. No.: VS-0252-US-2

IN THE UNITED STATES PATENT AND TRADEMARK OFFICE

In re application of:	Confirmation No.: 7511
Clinton Cathey	Examiner: Patel, Paresh H.
Application No.: 12/339,601	Art Unit: 2858
Filed: December 19, 2008	STATEMENT PURSUANT TO PATENT APPLICATION BACKLOG REDUCTION STIMULUS PLAN
For: SYSTEM AND METHODS FOR DETERMINING MOTOR POSITION	
Customer No.: 61668	

COPY

Commissioner for Patents
P.O. Box 1450
Alexandria, VA 22313-1450

Commissioner:

Pursuant to the Patent Application Backlog Reduction Stimulus Plan, as most recently published in the Federal Register on November 22, 2010 at 75 Fed. Reg. 71072, applicant hereby expressly abandons the instant application. A petition for express abandonment of the instant application pursuant to 37 C.F.R. §1.138(a) is filed concurrently with this paper. Pursuant to the requirements of the Patent Application Backlog Reduction Stimulus Plan, applicant hereby makes the following statements:

a) applicant has not and will not file an application that claims the benefit of the instant expressly abandoned application under any provision of Title 35, United States Code;

b) applicant agrees not to request a refund of any fees paid in the instant expressly abandoned application; and

c) applicant has not and will not file a new application that claims the same invention claimed in the instant expressly abandoned application.

Below are the applications involved in this Patent Application Exchange Program transaction. Please notify the undersigned immediately if you notice any inconsistencies between this information and the information on file.

Application being Advanced	Application being Abandoned
Serial Number: 12/406,870	Serial Number: 12/339,601
Title: FREQUENCY RE-USE FOR SERVICE AND GATEWAY BEAMS	Title: SYSTEM AND METHODS FOR DETERMINING MOTOR POSITION
First Named Inventor: Dankberg	First Named Inventor: Cathey
Filing Date: 18-Mar-2009	Filing Date: 19-Dec-2008
Attorney Docket: 017018-008310US	Attorney Docket: 017018-018910US
Client Docket: VS-0160-US-2	Client Docket: VS-0252-US-2

COPY

Respectfully submitted,

/Preetam B. Pagar/

Preetam B. Pagar
Reg. No. 57,684

TOWNSEND and TOWNSEND and CREW LLP
Two Embarcadero Center, Eighth Floor
San Francisco, California 94111-3834
Tel: (415) 576-0200
Fax: (415) 576-0300
PBP:pbp

UNITED STATES PATENT AND TRADEMARK OFFICE

Commissioner for Patents
United States Patent and Trademark Office
P.O. Box 1450
Alexandria, VA 22313-1450
www.uspto.gov

TOWNSEND AND TOWNSEND AND CREW LLP/VIASAT
VIASAT, INC. (CLIENT #017018)
TWO EMBARCADERO CENTER
8TH FLOOR
SAN FRANCISCO CA 94111

MAILED

FEB 09 2011

OFFICE OF PETITIONS

In re Application of :
DANKBERG, et al. :
Application No. 12/406,870 :
Filed: March 18, 2009 :
Attorney Docket No. **017018-008310US** :

DECISION ON PETITION
TO MAKE SPECIAL
37 CFR 1.102

This is a decision on the petition under 37 CFR 1.102, filed February 4, 2011, to make the above-identified application special under the Patent Application Backlog Reduction Stimulus Plan which is a pilot program set forth at 74 Federal Register Notice 62285 (November 27, 2009) and 75 Federal register Notice 36063 (June 24, 2010).

The petition is **GRANTED**.

A grantable petition to make an application special under 37 CFR 1.102 and the pilot program as set forth in 74 FR 62285 and 75 FR 36063 must be directed to a nonprovisional application filed prior to October 1, 2009.

The USPTO will accord special status for examination under Patent Application Backlog Reduction Stimulus Plan under the following conditions:

(1) The application for which special status is sought is a nonprovisional application that has an actual filing date earlier than October 1, 2009;

(2) The applicant has another copending nonprovisional application that has an actual filing date earlier than October 1, 2009, and is complete under 37 CFR 1.53;

(3) The application for which special status is sought and the other copending nonprovisional application either are owned by the same party as of October 1, 2009, or name at least one inventor in common;

(4) The applicant files a letter of express abandonment under 37 CFR 1.138(a) in the copending nonprovisional application before it has been taken up for examination and

a) includes a statement that the applicant has not and will not file a new application that claims the same invention claimed in the expressly abandoned application;

b) includes a statement that the applicant has not and will not file an application that claims the benefit of the expressly abandoned application under any provision of title 35, United States Code, and

c) includes a statement that the applicant agrees not to request a refund of any fees paid in the expressly abandoned application; and

(5) The applicant files a petition under 37 CFR 1.102 in the application for which special status is sought that

a) includes a specific identification of the relationship between the applications that qualifies the application for special status;

b) identifies, by application number if available, the application that is being expressly abandoned;

c) provides a statement certifying that applicant has not filed petitions in more than fourteen (14) other applications requesting special status under this program; and

d) provides a statement that applicant agrees to make an election without traverse in a telephonic interview if the Office determines that the claims of the application to be made special are directed to two or more independent and distinct inventions.

The requirement for a fee for consideration of the petition to make special for applications pertaining to Patent Application Backlog Reduction Stimulus Plan has been waived.

The instant petition complies with the conditions required under Patent Application Backlog Reduction Stimulus Plan. Accordingly, the above-identified application has been accorded "special" status.

Telephone inquires concerning this decision should be directed to Brian W. Brown at 571-272-5338.

All other inquires concerning either the examination or status of the application should be directed to the Technology Center.

The application is being forwarded to the Office of Patent Application Processing for further processing commensurate with this decision.

Brian W. Brown
Petitions Examiner
Office of Petitions

UNITED STATES PATENT AND TRADEMARK OFFICE

Commissioner for Patents
United States Patent and Trademark Office
P.O. Box 1450
Alexandria, VA 22313-1450
www.uspto.gov

RAJ ABHYANKER, P.C.
1580 WEST, EL CAMINO REAL, SUITE 8
MOUNTAIN VIEW CA 94040

MAILED
APR 29 2011
OFFICE OF PETITIONS

In re Application:
Friedman et al.
Application No. 12/406,875
Filed: March 18, 2009
Attorney Docket No. 00107.00002US1

NOTICE

This is a notice regarding your request for acceptance of a fee deficiency submission under 37 CFR 1.28 filed March 15, 2011.

On September 1, 1998, the Court of Appeals for the Federal Circuit held that 37 CFR 1.28(c) is the sole provision governing the time for correction of the erroneous payment of the issue fee as a small entity. **See DH Technology v. Synergystex International, Inc. 154 F.3d 1333, 47 USPQ2d 1865 (Fed. Cir. Sept. 1, 1998).**

The Office no longer investigates or rejects original or reissue applications under 37 CFR 1.56. **1098 Off. Gaz. Pat. Office 502 (January 3, 1989)**. Therefore, nothing in this Notice is intended to imply that an investigation was done.

Your fee deficiency submission under 37 CFR 1.28 is hereby **DISMISSED.**

The request under 37 CFR 1.28 cannot be accepted at this time since petitioner has failed to provide the required $130.00 itemization fee.

An itemization of the total deficiency payment is required by 37 CFR 1.28(c)(2)(ii). The itemization must include the following information:

(A) Each particular type of fee that was erroneously paid as a small entity, (e.g., basic statutory filing fee, two-month extension of time fee) along with the current fee amount for a non-small entity;
(B) The small entity fee actually paid, and when. This will permit the Office to differentiate, for example, between two one-month extension of time fees erroneously paid as a small entity but on different dates;
(C) The deficiency owed amount (for each fee erroneously paid); and

(D) The total deficiency payment owed, which is the sum or total of the individual deficiency owed amounts set forth in paragraph (c)(2)(ii)(C) of this section.

If the requirements of 37 CFR 1.28(c)(2) are not complied with (i.e. not itemizing the total deficiency ,etc.), such failure will either: be treated as an authorization for the Office to process the deficiency payment and charge the processing fee set forth in § 1.17(i), or result in a requirement for compliance within a one-month non-extendable time period under § 1.136(a) to avoid the return of the fee deficiency paper, at the option.of the Office.

Petitioner has not provided an itemization of the total deficiency payments of $628.00 further, petitioner has failed to authorize the payment of the $130.00 processing fee as set forth in 37 CFR 1.17(i). Therefore, the petition cannot be granted at this time.

Further correspondence with respect to this matter should be addressed as follows:

By Mail: Mail Stop PETITIONS
Commissioner for Patents
Post Office Box 1450
Alexandria, VA 22313-1450

By hand: U.S. Patent and Trademark Office
Customer Service Window, Mail Stop Petitions
Randolph Building
401 Dulany Street
Alexandria, VA 22314

The centralized facsimile number is (571) 273-8300.

Telephone inquires concerning this decision should be directed to the undersigned at (571) 272-7751.

/Joan Olszewski/
Joan Olszewski
Petitions Examiner
Office of Petitions

UNITED STATES PATENT AND TRADEMARK OFFICE

Commissioner for Patents
United States Patent and Trademark Office
P.O. Box 1450
Alexandria, VA 22313-1450
www.uspto.gov

RAJ ABHYANKER, P.C.
1580 WEST, EL CAMINO REAL, SUITE 8
MOUNTAIN VIEW CA 94040

MAILED
JUN 10 2011
OFFICE OF PETITIONS

In re Application:
Friedman et al.
Application No. 12/406,875
Filed: March 18, 2009
Attorney Docket No. 00107.00002US1

ON PETITION

This is a notice regarding your renewed request for acceptance of a fee deficiency submission under 37 CFR 1.28 filed May 24, 2011.

On September 1, 1998, the Court of Appeals for the Federal Circuit held that 37 CFR 1.28(c) is the sole provision governing the time for correction of the erroneous payment of the issue fee as a small entity. **See DH Technology v. Synergystex International, Inc. 154 F.3d 1333, 47 USPQ2d 1865 (Fed. Cir. Sept. 1, 1998).**

The Office no longer investigates or rejects original or reissue applications under 37 CFR 1.56. **1098 Off. Gaz. Pat. Office 502 (January 3, 1989)**. Therefore, nothing in this Notice is intended to imply that an investigation was done.

Your fee deficiency submission under 37 CFR 1.28 is hereby **ACCEPTED**.

This application is no longer entitled to small entity status. Accordingly, all future fees paid in this application must be paid at the large entity rate.

Further, petitioner has currently submitted an itemization of fees due and an unnecessary duplicate fee deficiency payment of $675.00. This amount will be refunded to petitioner's credit card in due course.

Telephone inquires concerning this decision should be directed to the undersigned at (571) 272-7751.

/Joan Olszewski/
Joan Olszewski
Petitions Examiner
Office of Petitions

UNITED STATES PATENT AND TRADEMARK OFFICE

UNITED STATES DEPARTMENT OF COMMERCE
United States Patent and Trademark Office
Address: COMMISSIONER FOR PATENTS
P.O. Box 1450
Alexandria, Virginia 22313-1450
www.uspto.gov

APPLICATION NO.	FILING DATE	FIRST NAMED INVENTOR	ATTORNEY DOCKET NO.	CONFIRMATION NO.
12/406,884	03/18/2009	Michael CUZYDLO	09-075-US	6268

7590 05/06/2011

REED SMITH LLP
P.O. BOX 488
PITTSBURGH, PA 15230-0488

EXAMINER	
YU, JUSTINE ROMANG	

ART UNIT	PAPER NUMBER
3771	

NOTIFICATION DATE	DELIVERY MODE
05/06/2011	ELECTRONIC

DECISION GRANTING PETITION UNDER 37 CFR 1.138(d)

The declaration of express abandonment is recognized

This is in response to the petition under 37 CFR 1.138(d), requesting for a refund of any previously paid search fee and excess claims fee in the above-identified application.

The petition is granted.

The express abandonment is recognized. Any previously paid search fee and excess claims fee are hereby refunded.

Telephone inquiries should be directed to the Office of Data Management at (571) 272-4200.

Patent Publication Branch
Office of Data Management

UNITED STATES PATENT AND TRADEMARK OFFICE

Commissioner for Patents
United States Patent and Trademark Office
P.O. Box 1450
Alexandria, VA 22313-1450
www.uspto.gov

ANATOLY S. WEISER
3525 DEL MAR HEIGHTS ROAD, #295
SAN DIEGO CA 92130

MAILED

FEB 28 2011

OFFICE OF PETITIONS

In re Application of	:	
Leahy et al.	:	DECISION ON PETITION
Application No. 12/406,968	:	TO WITHDRAW
Filed: March 19, 2009	:	FROM RECORD
Attorney Docket No. WORLDS 003	:	

This is a decision on the Request to Withdraw as attorney or agent of record under 37 C.F.R. § 1.36(b), filed January 5, 2011.

The request is **APPROVED**.

A grantable request to withdraw as attorney/agent of record must be signed by every attorney/agent seeking to withdraw or contain a clear indication that one attorney is signing on behalf of another/others. The Office will require the practitioner(s) to certify that he, she or they have: (1) given reasonable notice to the client, prior to the expiration of the reply period, which the practitioner(s) intends to withdraw from employment; (2) delivered to the client or a duly authorized representative of the client all papers and property (including funds) to which the client is entitled; and (3) notified the client of any replies that may be due and the time frame within which the client must respond, pursuant to 37 CFR 10.40 (c).

The request was signed by Anatoly S. Weiser on behalf of all attorneys/agents of record who are associated with Customer Number 35070. All attorneys/agents associated with Customer Number 35070 have been withdrawn. Applicants are reminded that there is no attorney of record at this time.

All future correspondence will be directed to the assignee, Worlds.com, Inc., at the address indicated below.

Telephone inquires concerning this decision should be directed to the undersigned at (571) 272-3206. All other inquires concerning either the examination or status of the application should be directed to the Technology Center.

Liana Walsh
Petitions Examiner
Office of Petitions

cc: WORLDS.COM, INC.
11 ROYAL ROAD
BROOKLINE, MA 02445

UNITED STATES PATENT AND TRADEMARK OFFICE

Commissioner for Patents
United States Patent and Trademark Office
P.O. Box 1450
Alexandria, VA 22313-1450
www.uspto.gov

ANATOLY S. WEISER
3525 DEL MAR HEIGHTS ROAD, #295
SAN DIEGO CA 92130

MAILED

JAN 31 2011

OFFICE OF PETITIONS

In re Application of :
Dave Leahy et al. :
Application No. 12/406,970 : DECISION ON PETITION
Filed: March 19, 2009 : TO WITHDRAW
Attorney Docket No. **AP019CON4** : FROM RECORD
:

This is a decision on the Request to Withdraw as attorney or agent of record under 37 CFR § 1.36(b), filed January 5, 2011.

The request is **NOT APPROVED**.

The request cannot be approved because the requested change in the correspondence address is improper.

The Office will only accept correspondence address changes to the most current address information provided for the assignee of the entire interest *who properly became of record under 37 CFR 3.71,* or, if no assignee of the entire interest has properly been made of record, the most current address information provided for the first named inventor. 37 CFR 3.71(c) states:

> *An assignee becomes of record either in a national patent application or a reexamination proceeding by filing a statement in compliance with § 3.73(b) that is signed by a party who is authorized to act on behalf of the assignee.*

The assignee must establish its ownership of the patent to the satisfaction of the Director. In this regard, the statement under 37 CFR 3.73(b) must have either: (i) documentary evidence of a chain of title from the original owner to the assignee (*e.g.*, copy of an executed assignment), and a statement affirming that the documentary evidence of the chain of title from the original owner to the assignee was or concurrently is being submitted for recordation pursuant to § 3.11; or (ii) a statement specifying where documentary evidence of a chain of title from the original owner to the assignee is recorded in the assignment records of the Office (*e.g.*, reel and frame number).

Therefore, as there is currently no Statement under 37 CFR 3.73(b) with the current assignee information of record in the instant application, the Office cannot change the correspondence address to the address on the Request to Withdraw at this present time.

All future communications from the Office will continue to be directed to the above-listed address until otherwise notified by applicant.

Telephone inquires concerning this decision should be directed to JoAnne Burke at 571-272-4584.

/JoAnne Burke/
JoAnne Burke
Petitions Examiner
Office of Petitions

UNITED STATES PATENT AND TRADEMARK OFFICE

UNITED STATES DEPARTMENT OF COMMERCE
United States Patent and Trademark Office
Address: COMMISSIONER FOR PATENTS
P.O. Box 1450
Alexandria, Virginia 22313-1450
www.uspto.gov

APPLICATION NO.	FILING DATE	FIRST NAMED INVENTOR	ATTORNEY DOCKET NO.	CONFIRMATION NO.
12/407,054	03/19/2009	Toshihiro Ochi	2221.1050	6598

7590 11/03/2010

STAAS & HALSEY LLP
SUITE 700
1201 NEW YORK AVENUE, N.W.
WASHINGTON, DC 20005

EXAMINER	
MEHTA, BHAVESH M	
ART UNIT	**PAPER NUMBER**
2624	
MAIL DATE	**DELIVERY MODE**
11/03/2010	PAPER

DECISION GRANTING PETITION UNDER 37 CFR 1.138(d)

The declaration of express abandonment is recognized

This is in response to the petition under 37 CFR 1.138(d), requesting for a refund of any previously paid search fee and excess claims fee in the above-identified application.

The petition is granted.

The express abandonment is recognized. Any previously paid search fee and excess claims fee are hereby refunded.

Telephone inquiries should be directed to the Office of Data Management at (571) 272-4200.

Patent Publication Branch
Office of Data Management

12407354

UNITED STATES PATENT AND TRADEMARK OFFICE

Commissioner for Patents
United States Patent and Trademark Office
P.O. Box 1450
Alexandria, VA 22313-1450
www.uspto.gov

THE PROCTER & GAMBLE COMPANY
Global Legal Department - IP
Sycamore Building - 4th Floor
299 East Sixth Street
CINCINNATI OH 45202

MAILED

APR 04 2011

OFFICE OF PETITIONS

In re Application of :
Tombult-Meyer, et al. : DECISION ON PETITION
Application No. 12/407,112 :
Filed: March 19, 2009 :
Atty. Dkt. No.: CM2662MQD2 :

This decision is in response to the petition under 37 CFR 1.137(b), filed February 28, 2011.

The petition is **GRANTED**.

The application became abandoned July 3, 2010 for failure to timely submit a proper reply to the Office communication mailed June 2, 2010. The Office communication set a one month shortened statutory period of time for reply. No petition for extension of time under 37 CFR 1.136(a) was timely filed. Notice of Abandonment was mailed December 28, 2010.

A grantable petition pursuant to 37 C.F.R. § 1.137(b) must be accompanied by: (1) the required reply to the outstanding Office action or notice, unless previously filed; (2) the petition fee as set forth in 37 C.F.R. § 1.17(m); (3) a statement that the entire delay in filing the required reply from the due date for the reply until the filing of a grantable petition pursuant to 37 C.F.R. § 1.137(b) was unintentional; and (4) any terminal disclaimer (and fee set forth in 37 C.F.R. § 1.20(d)) required pursuant to 37 C.F.R. § 1.137(c).

The instant petition has been carefully reviewed and found in compliance with the requirements set forth above.

This application is being forwarded to Group Art Unit 1715 for further processing.

Telephone inquiries concerning this decision should be directed to the undersigned at (571) 272-3205.

/ALESIA M. BROWN/

Alesia M. Brown
Attorney Advisor
Office of Petitions

UNITED STATES PATENT AND TRADEMARK OFFICE

Commissioner for Patents
United States Patent and Trademark Office
P.O. Box 1450
Alexandria, VA 22313-1450
www.uspto.gov

THOMAS, KAYDEN, HORSTEMEYER & RISLEY, LLP
400 INTERSTATE NORTH PARKWAY SE
SUITE 1500
ATLANTA GA 30339

MAILED

JUL 13 2011

OFFICE OF PETITIONS

In re Application of:
Weng et al.
Application No. 12/407,115
Filed: March 19, 2009
Attorney Docket No. 252215-1011

ON PETITION

This is a notice regarding your request for acceptance of a fee deficiency submission under 37 CFR 1.28 filed June 14, 2011.

On September 1, 1998, the Court of Appeals for the Federal Circuit held that 37 CFR 1.28(c) is the sole provision governing the time for correction of the erroneous payment of the issue fee as a small entity. **See DH Technology v. Synergystex International, Inc. 154 F.3d 1333, 47 USPQ2d 1865 (Fed. Cir. Sept. 1, 1998).**

The Office no longer investigates or rejects original or reissue applications under 37 CFR 1.56. **1098 Off. Gaz. Pat. Office 502 (January 3, 1989)**. Therefore, nothing in this Notice is intended to imply that an investigation was done.

Your fee deficiency submission under 37 CFR 1.28 is hereby **ACCEPTED**.

This application is no longer entitled to small entity status. Accordingly, all future fees paid in this application must be paid at the large entity rate.

However, an itemization of the total deficiency payment is required by 37 CFR 1.28(c)(2)(ii). The itemization must include the following information:

(A) Each particular type of fee that was erroneously paid as a small entity, (e.g., basic statutory filing fee, two-month extension of time fee) along with the current fee amount for a non-small entity;
(B) The small entity fee actually paid, and when. This will permit the Office to differentiate, for example, between two one-month extension of time fees erroneously paid as a small entity but on different dates;

(C) The deficiency owed amount (for each fee erroneously paid); and
(D) The total deficiency payment owed, which is the sum or total of the individual deficiency owed amounts set forth in paragraph (c)(2)(ii)(C) of this section.

If the requirements of 37 CFR 1.28(c)(2) are not complied with (i.e. not itemizing the total deficiency ,etc.), such failure will either: be treated as an authorization for the Office to process the deficiency payment and charge the processing fee set forth in § 1.17(i), or result in a requirement for compliance within a one-month non-extendable time period under § 1.136(a) to avoid the return of the fee deficiency paper, at the option of the Office.

Petitioner has not provided a proper itemization of the total deficiency payment of $628.00 and therefore petitioner's credit card has been charged the $130.00 processing fee as set forth in 37 CFR 1.17(i). Further, it appears petitioner has submitted an unnecessary duplicate payment of $628.00 on June 14, 2011 (previously paid April 2, 2009). Therefore, the remaining overage of $498.00 will be refunded to petitioner's credit card in due course.

Telephone inquires concerning this decision should be directed to the undersigned at (571) 272-7751.

/Joan Olszewski/
Joan Olszewski
Petitions Examiner
Office of Petitions

UNITED STATES PATENT AND TRADEMARK OFFICE

Commissioner for Patents
United States Patent and Trademark Office
P.O. Box 1450
Alexandria, VA 22313-1450
www.uspto.gov

GENERAL MOTORS LLC
LEGAL STAFF
MAIL CODE 482-C23-B21
PO BOX 300
DETROIT MI 48265-3000

MAILED

AUG 24 2011

OFFICE OF PETITIONS

In re Application of	:	
Kwok Y. Ng et al	:	
Application No. 12/407,251	:	DECISION GRANTING PETITION
Filed: March 19, 2009	:	UNDER 37 CFR 1.313(c)(2)
Attorney Docket No. P005434-PTE-DPH	:	

This is a decision on the petition under 37 CFR 1.313(c)(2), filed August 23, 2011, to withdraw the above-identified application from issue after payment of the issue fee.

The petition is **GRANTED**.

The above-identified application is withdrawn from issue for consideration of a submission under 37 CFR 1.114 (request for continued examination). *See* 37 CFR 1.313(c)(2).

Petitioner is advised that the issue fee paid on July 25, 2011 cannot be refunded. If, however, this application is again allowed, petitioner may request that it be applied towards the issue fee required by the new Notice of Allowance.[1]

Telephone inquiries should be directed to the undersigned at (571) 272-3208.

This application is being referred to Technology Center AU 3747 for processing of the request for continued examination under 37 CFR 1.114 and for consideration of the concurrently filed IDS.

/Karen Creasy/
Karen Creasy
Petitions Examiner
Office of Petitions

[1] *The request to apply the issue fee to the new Notice may be satisfied by completing and returning the new Part B – Fee(s) Transmittal Form (along with any balance due at the time of submission). Petitioner is advised that the Issue Fee Transmittal Form must be completed and timely submitted to avoid abandonment of the application.*

SPE RESPONSE FOR CERTIFICATE OF CORRECTION

DATE : **12/29/11**

TO SPE OF : ART UNIT: **1776 Attn: SMITH DUANE (SPE)**

SUBJECT : Request for Certificate of Correction for Appl. No.: **12/407267** Patent No.: **8043397**

CofC mailroom date: **12/22/2011**

Please respond to this request for a certificate of correction within 7 days.

FOR IFW FILES:

Please review the requested changes/corrections as shown in the **COCIN** document(s) in the IFW application image. No new matter should be introduced, nor should the scope or meaning of the claims be changed.

Please complete the response (see below) and forward the completed response to scanning using document code **COCX**.

FOR PAPER FILES:

Please review the requested changes/corrections as shown in the attached certificate of correction. Please complete this form (see below) and forward it with the file to:

Certificates of Correction Branch (CofC)
Randolph Square – 9D10-A
Palm Location 7580

Note: **Please check Foreign Application Priority Data as requested on the PTOL/SB/44 Form**

Tasneem Siddiqui
Certificates of Correction Branch
703-756-1814 & 703-756-1593

Thank You For Your Assistance

The request for issuing the above-identified correction(s) is hereby:
Note your decision on the appropriate box.

xApproved	**All** changes apply.
☐ **Approved in Part**	Specify below which changes **do not** apply.
☐ **Denied**	State the reasons for denial below.

Comments: ok to enter

/Duane Smith/ **1776**

SPE **Art Unit**

UNITED STATES PATENT AND TRADEMARK OFFICE

Commissioner for Patents
United States Patent and Trademark Office
P.O. Box 1450
Alexandria, VA 22313-1450
www.uspto.gov

Muncy, Geissler, Olds & Lowe, PLLC
4000 Legato Road
Suite 310
FAIRFAX VA 22033

MAILED
MAR 29 2011
OFFICE OF PETITIONS

In re Application of :
HORNG et al. :
Application No. 12/407,306 : DECISION ON PETITION
Filed: March 19, 2009 : UNDER 37 CFR 1.55(c)
Attorney Docket No. 3624/0341PUS1 :

This is a decision on the petition under 37 CFR 1.55(c), filed November 3, 2010, to accept an unintentionally delayed claim under 35 U.S.C. § 119(a)-(d) for benefit of priority to the filing date of foreign Tiawan Application No. 097135371, filed September 15, 2008.

The petition is **DISMISSED**.

This application was filed after November 29, 2000, and did not include a reference to the foreign application, for which benefit is now sought, within the later of four months from the actual filing date of the application or sixteen months from the filing date of the prior foreign application. Since the claim for priority is submitted after the period specified in 37 CFR 1.55(a)(1)(i), this is an appropriate petition under the provisions of 37 CFR 1.55(c).

A petition under 37 CFR 1.55(c) to accept an unintentionally delayed claim for priority requires:

(1) The nonprovisional application claiming the benefit of an earlier filing date must be filed on or after November 29, 2000;
(2) the claim submitted with the petition must identify the prior foreign application for which priority is claimed, as well as any foreign application for the same subject matter and having a filing date before that of the application for which priority is claimed, by the application number, country, and the filing date, **and be included either in an oath or declaration (37 CFR 1.63(c)(2)) or in an Application Data Sheet (37 CFR 1.76(b)(6))**;
(3) the surcharge as set forth in 37 CFR 1.17(t);
(4) a statement that the entire delay between the date the claim was due under 37 CFR 1.55(a)(1) and the date the claim was filed was unintentional (the Director

may require additional information where there is a question whether the delay was unintentional); and

(5) the above-identified nonprovisional application must be filed within 12 months of the filing date of the foreign application.

The petition fails to comply with item (2) above. In this regard, a review of the file record fails to disclose that the priority information was included in an oath or declaration or in an Application Data Sheet (ADS) in accordance with 37 CFR 1.76(b)(6). Unless provided in an ADS, 37 CFR 1.63(c)(2) requires that the oath or declaration must identify the foreign application for patent (or inventor's certificate) for which priority is claimed under 37 CFR 1.55, and any foreign application having a filing date before that of the application on which priority is claimed, by specifying the application number, country, day, month, and year of its filing. *Note* MPEP 201.14.

In view of the above, compliance with 37 CFR 1.63(c)(2) or 37 CFR 1.76(b)(6) must be satisfied if applicant desires to claim priority to the foreign application noted in the petition. Any future petition should include a cover letter and be entitled "Renewed Petition under 37 CFR 1.55(c)."

Further correspondence with respect to this matter should be addressed as follows:

By mail:
Mail Stop PETITIONS
Commissioner for Patents
Post Office Box 1450
Alexandria, VA 22313-1450

By hand:
Customer Service Window
Mail Stop Petitions
Randolph Building
401 Dulany Street
Alexandria, VA 22314

By fax:
(571) 273-8300
ATTN: Office of Petitions

Any questions concerning this matter may be directed to Jose' G Dees at (571) 272-1569.

Christopher Bottorff
Petitions Examiner
Office of Petitions

UNITED STATES PATENT AND TRADEMARK OFFICE

Commissioner for Patents
United States Patent and Trademark Office
P.O. Box 1450
Alexandria, VA 22313-1450
www.uspto.gov

Muncy, Geissler, Olds & Lowe, PLLC
4000 Legato Road
Suite 310
FAIRFAX VA 22033

MAILED
MAY 17 2011
OFFICE OF PETITIONS

In re Application of :
HORNG et al. :
Application No. 12/407,306 : DECISION ON PETITION
Filed: March 19, 2009 : UNDER 37 CFR 1.55(c)
Docket No. 3624/0341PUS1 :

This is a decision on the renewed petition under 37 CFR 1.55(c), filed March 31, 2011, to accept an unintentionally delayed claim under 35 U.S.C. § 119(a)-(d) for the benefit of priority to foreign Taiwan, R.O.C. Application No. 097135371, filed September 15, 2008.

The petition is **GRANTED**.

This pending nonprovisional application was filed after November 29, 2000, and did not include a reference to the foreign application, for which benefit is now sought, within the later of four months from the actual filing date of the application or sixteen months from the filing date of the prior foreign application. Since the claim for priority is submitted after the period specified in 37 CFR 1.55(a)(1)(i), this is an appropriate petition under the provisions of 37 CFR 1.55(c).

A petition under 37 CFR 1.55(c) to accept an unintentionally delayed claim for priority requires:

(1) The nonprovisional application claiming the benefit of an earlier filing date must be filed on or after November 29, 2000;

(2) the claim submitted with the petition must identify the prior foreign application for which priority is claimed, as well as any foreign application for the same subject matter and having a filing date before that of the application for which priority is claimed, by the application number, country, and the filing date and be included either in an oath or declaration (37 CFR 1.63(c)(2)) or in an Application Data Sheet (37 CFR 1.76(b)(6);

(3) the surcharge as set forth in 37 CFR 1.17(t);

(4) a statement that the entire delay between the date the claim was due under 37 CFR 1.55(a)(1) and the date the claim was filed was unintentional (the Director

may require additional information where there is a question whether the delay was unintentional); and

(5) the above-identified nonprovisional application must be filed within 12 months of the filing date of the foreign application.

This application was filed on March 19, 2009, which is after November 29, 2000 and within 12 months of September 15, 2008 (the filing date of the foreign application to which benefit is now being claimed). On March 31, 2011, an Application Data Sheet was received which identifies the foreign application for which priority is claimed by application number, country and filing date. The required petition fee of $1410 was received with the petition. Lastly, petitioner has provided an adequate statement of unintentional delay.

All of the above requirements having been satisfied, the late claim for priority under 35 U.S.C. § 119(a)-(d) is accepted as being unintentionally delayed.

The granting of the petition to accept the delayed benefit claim to the prior-filed application under 37 CFR 1.55(c) should not be construed as meaning that this application is entitled to the benefit of the prior-filed application. In order for this application to be entitled to the benefit of the prior-filed application, all other requirements under 35 U.S.C. § 119(a)-(d) and 37 CFR 1.55(a)(1) must be met. Similarly, the fact that the corrected Filing Receipt accompanying this decision on petition includes the prior-filed application should not be construed as meaning that applicant is entitled to the claim for benefit of priority to the prior-filed application noted thereon. Accordingly, the examiner will, in due course, consider this benefit claim and determine whether this application is entitled to the benefit of the earlier filing date.

A corrected Filing Receipt, which includes the priority claim to the prior-filed foreign application, accompanies this decision on petition.

Any inquiries concerning this decision may be directed to Jose' G Dees at (571) 272-1569. All other inquiries concerning either the examination procedures or status of the application should be directed to the Technology Center.

This application is being referred to Technology Center AU 2821 for examination in due course and for consideration by the examiner of record of the foreign priority claim under 35 U.S.C. § 119(a)-(d).

David Bucci
Petitions Examiner
Office of Petitions

ATTACHMENT: Corrected Filing Receipt

UNITED STATES PATENT AND TRADEMARK OFFICE

UNITED STATES DEPARTMENT OF COMMERCE
United States Patent and Trademark Office
Address: COMMISSIONER FOR PATENTS
P.O. Box 1450
Alexandria, Virginia 22313-1450
www.uspto.gov

APPLICATION NUMBER	FILING or 371(c) DATE	GRP ART UNIT	FIL FEE REC'D	ATTY.DOCKET.NO	TOT CLAIMS	IND CLAIMS
12/407,306	03/19/2009	2821	1090	3624/0341PUS1	8	1

CONFIRMATION NO. 7086

CORRECTED FILING RECEIPT

60601
Muncy, Geissler, Olds & Lowe, PLLC
4000 Legato Road
Suite 310
FAIRFAX, VA 22033

Date Mailed: 05/17/2011

Receipt is acknowledged of this non-provisional patent application. The application will be taken up for examination in due course. Applicant will be notified as to the results of the examination. Any correspondence concerning the application must include the following identification information: the U.S. APPLICATION NUMBER, FILING DATE, NAME OF APPLICANT, and TITLE OF INVENTION. Fees transmitted by check or draft are subject to collection. Please verify the accuracy of the data presented on this receipt. **If an error is noted on this Filing Receipt, please submit a written request for a Filing Receipt Correction. Please provide a copy of this Filing Receipt with the changes noted thereon. If you received a "Notice to File Missing Parts" for this application, please submit any corrections to this Filing Receipt with your reply to the Notice. When the USPTO processes the reply to the Notice, the USPTO will generate another Filing Receipt incorporating the requested corrections**

Applicant(s)

Alex Horng, Kaohsiung, TAIWAN;
Masaharu Miyahara, Kaohsiung, TAIWAN;
Heng-Yu Hu, Kaohsiung, TAIWAN;

Power of Attorney: The patent practitioners associated with Customer Number 60601

Domestic Priority data as claimed by applicant

Foreign Applications (You may be eligible to benefit from the **Patent Prosecution Highway** program at the USPTO. Please see http://www.uspto.gov for more information.)
TAIWAN 097135371 09/15/2008

If Required, Foreign Filing License Granted: 04/01/2009

The country code and number of your priority application, to be used for filing abroad under the Paris Convention, is **US 12/407,306**

Projected Publication Date: Not Applicable

Non-Publication Request: No

Early Publication Request: No

Title

SELF-DUSTING LAMP DEVICE

Preliminary Class

315

PROTECTING YOUR INVENTION OUTSIDE THE UNITED STATES

Since the rights granted by a U.S. patent extend only throughout the territory of the United States and have no effect in a foreign country, an inventor who wishes patent protection in another country must apply for a patent in a specific country or in regional patent offices. Applicants may wish to consider the filing of an international application under the Patent Cooperation Treaty (PCT). An international (PCT) application generally has the same effect as a regular national patent application in each PCT-member country. The PCT process **simplifies** the filing of patent applications on the same invention in member countries, but **does not result** in a grant of "an international patent" and does not eliminate the need of applicants to file additional documents and fees in countries where patent protection is desired.

Almost every country has its own patent law, and a person desiring a patent in a particular country must make an application for patent in that country in accordance with its particular laws. Since the laws of many countries differ in various respects from the patent law of the United States, applicants are advised to seek guidance from specific foreign countries to ensure that patent rights are not lost prematurely.

Applicants also are advised that in the case of inventions made in the United States, the Director of the USPTO must issue a license before applicants can apply for a patent in a foreign country. The filing of a U.S. patent application serves as a request for a foreign filing license. The application's filing receipt contains further information and guidance as to the status of applicant's license for foreign filing.

Applicants may wish to consult the USPTO booklet, "General Information Concerning Patents" (specifically, the section entitled "Treaties and Foreign Patents") for more information on timeframes and deadlines for filing foreign patent applications. The guide is available either by contacting the USPTO Contact Center at 800-786-9199, or it can be viewed on the USPTO website at http://www.uspto.gov/web/offices/pac/doc/general/index.html.

For information on preventing theft of your intellectual property (patents, trademarks and copyrights), you may wish to consult the U.S. Government website, http://www.stopfakes.gov. Part of a Department of Commerce initiative, this website includes self-help "toolkits" giving innovators guidance on how to protect intellectual property in specific countries such as China, Korea and Mexico. For questions regarding patent enforcement issues, applicants may call the U.S. Government hotline at 1-866-999-HALT (1-866-999-4158).

LICENSE FOR FOREIGN FILING UNDER

Title 35, United States Code, Section 184

Title 37, Code of Federal Regulations, 5.11 & 5.15

GRANTED

The applicant has been granted a license under 35 U.S.C. 184, if the phrase "IF REQUIRED, FOREIGN FILING LICENSE GRANTED" followed by a date appears on this form. Such licenses are issued in all applications where the conditions for issuance of a license have been met, regardless of whether or not a license may be required as

set forth in 37 CFR 5.15. The scope and limitations of this license are set forth in 37 CFR 5.15(a) unless an earlier license has been issued under 37 CFR 5.15(b). The license is subject to revocation upon written notification. The date indicated is the effective date of the license, unless an earlier license of similar scope has been granted under 37 CFR 5.13 or 5.14.

This license is to be retained by the licensee and may be used at any time on or after the effective date thereof unless it is revoked. This license is automatically transferred to any related applications(s) filed under 37 CFR 1.53(d). This license is not retroactive.

The grant of a license does not in any way lessen the responsibility of a licensee for the security of the subject matter as imposed by any Government contract or the provisions of existing laws relating to espionage and the national security or the export of technical data. Licensees should apprise themselves of current regulations especially with respect to certain countries, of other agencies, particularly the Office of Defense Trade Controls, Department of State (with respect to Arms, Munitions and Implements of War (22 CFR 121-128)); the Bureau of Industry and Security, Department of Commerce (15 CFR parts 730-774); the Office of Foreign AssetsControl, Department of Treasury (31 CFR Parts 500+) and the Department of Energy.

NOT GRANTED

No license under 35 U.S.C. 184 has been granted at this time, if the phrase "IF REQUIRED, FOREIGN FILING LICENSE GRANTED" DOES NOT appear on this form. Applicant may still petition for a license under 37 CFR 5.12, if a license is desired before the expiration of 6 months from the filing date of the application. If 6 months has lapsed from the filing date of this application and the licensee has not received any indication of a secrecy order under 35 U.S.C. 181, the licensee may foreign file the application pursuant to 37 CFR 5.15(b).

UNITED STATES PATENT AND TRADEMARK OFFICE

Commissioner for Patents
United States Patent and Trademark Office
P.O. Box 1450
Alexandria, VA 22313-1450
www.uspto.gov

O'BRIEN JONES, PLLC
1951 KIDWELL DRIVE
SUITE 550 B
TYSONS CORNER, VA 22182

MAILED

SEP 23 2010

OFFICE OF PETITIONS

In re Application of	:	
Philipp Bonhoeffer, et al.	:	DECISION NOTING JOINDER OF
Application No. 12/407,342	:	INVENTOR AND PETITION
Filed: March 19, 2009	:	UNDER 37 CFR 1.47(a)
Attorney Docket No.: 1017.0001-04	:	

Papers filed on July 28, 2010 in response to a "Decision Refusing Status Under 37 CFR 1.47(a)," mailed January 14, 2010, included a Declaration signed by a previously non-signing inventor, Philipp Bonhoeffer, in compliance with 37 CFR 1.63.

In view of the joinder of the inventor, further consideration under § 1.47(a) is not necessary. This application does not have any Rule 1.47 status and no such status should appear on the record for this file. This application need not be returned to this Office for any further consideration under 37 CFR 1.47(a).

Accordingly, the petition under 37 CFR 1.47(a) is **DISMISSED AS MOOT**.

This application is being referred to Technology Center AU 3731 for further prosecution.

Telephone inquiries should be directed to the undersigned at (571) 272-3204.

Sherry D. Brinkley
Petitions Examiner
Office of Petitions

Best Available Copy

UNITED STATES PATENT AND TRADEMARK OFFICE

Commissioner for Patents
United States Patent and Trademark Office
P.O. Box 1450
Alexandria, VA 22313-1450
www.uspto.gov

O'BRIEN JONES, PLLC
1951 KIDWELL DRIVE
SUITE 550 B
TYSONS CORNER VA 22182

MAILED

JAN 04 2011

OFFICE OF PETITIONS

In re Application of :
Bonhoeffer, et al. :
Application No. 12/407,342 : DECISION ON PETITION
Filed: 13 March, 2009 :
Attorney Docket No. 1017.0001-04 :

This is a decision on the petition filed on 23 June, 2010, requesting appointment of more than one representative herein, and considered pursuant to 37 C.F.R §1.182 and §1.183 for waiver as to the regulations at 37 C.F.R §1.32 and the guidance provided in the Commentary at MPEP §402.10 and §403, *et seq.*

NOTES:

There is no indication that Petitioner herein was ever empowered to prosecute the instant application.

If Petitioner desires to receive future correspondence regarding this application, the appropriate power of attorney documentation must be submitted. A courtesy copy of this decision will be mailed to Petitioner. However, all future correspondence will be directed to the address of record until such time as appropriate instructions are received to the contrary.

It is noted that Petitioner gives no indication that he has Noticed the co-inventor and/or assignee in this matter.

It also is noted that, notwithstanding the representations herein as to inability to confer and agree upon prosecution, a subsequent paper filed herein in the form of a 21 July, 2010, Election (in response to the 22 January, 20010, Office action (Requirement for Restriction) is executed by representatives of the co-inventor Philipp Bonhoeffer (Mr. Bonhoeffer) and the averred assignee JenaValve (JenaValve).

Best Available Copy

Out of an abundance of caution, Petitioners always are reminded that those registered to practice and all others who make representations before the Office **must** inquire into the underlying facts of representations made to the Office and support averments with the appropriate documentation–since all owe to the Office the continuing duty to disclose.[1]

Accordingly:

- The petition considered pursuant to 37 C.F.R §1.182 and §1.183 (in view of the guidance in the Commentary at MPEP §403, *et seq.*)[2] is **DISMISSED** without prejudice;

---

[1] See supplement of 17 June, 1999. The Patent and Trademark Office is relying on petitioner's duty of candor and good faith and accepting a statement made by Petitioner. See Changes to Patent Practice and Procedure, 62 Fed. Reg. at 53160 and 53178, 1203 Off. Gaz. Pat. Office at 88 and 103 (responses to comments 64 and 109)(applicant obligated under 37 C.F.R. §10.18 to inquire into the underlying facts and circumstances when providing statements to the Patent and Trademark Office).

[2] The guidance in the Commentary at MPEP §403 provides in pertinent part:

403Correspondence — With Whom Held [R-5]

37 CFR 1.33. Correspondence respecting patent applications, reexamination proceedings, and other proceedings.

(a)**>*Correspondence address and daytime telephone number.* When filing an application, a correspondence address must be set forth in either an application data sheet (§ 1.76), or elsewhere, in a clearly identifiable manner, in any paper submitted with an application filing. If no correspondence address is specified, the Office may treat the mailing address of the first named inventor (if provided, see §§ 1.76(b)(1) and 1.63(c)(2)) as the correspondence address. The Office will direct all notices, official letters, and other communications relating to the application to the correspondence address. The Office will not engage in double correspondence with an applicant and a patent practitioner, or with more than one patent practitioner except as deemed necessary by the Director. If more than one correspondence address is specified in a single document, the Office will select one of the specified addresses for use as the correspondence address and, if given, will select the address associated with a Customer Number over a typed correspondence address. For the party to whom correspondence is to be addressed, a daytime telephone number should be supplied in a clearly identifiable manner and may be changed by any party who may change the correspondence address. The correspondence address may be changed as follows:

(1)*Prior to filing of § 1.63 oath or declaration by any of the inventors.* If a § 1.63 oath or declaration has not been filed by any of the inventors, the correspondence address may be changed by the party who filed the application. If the application was filed by a patent practitioner, any other patent practitioner named in the transmittal papers may also change the correspondence address. Thus, the inventor(s), any patent practitioner named in the transmittal papers accompanying the original application, or a party that will be the assignee who filed the application, may change the correspondence address in that application under this paragraph.<

(2)*Where a § 1.63 oath or declaration has been filed by any of the inventors.* If a § 1.63 oath or declaration has been filed, or is filed concurrent with the filing of an application, by any of the inventors, the correspondence address may be changed by the parties set forth in paragraph (b) of this section, except for paragraph (b)(2).

(b)*Amendments and other papers.* Amendments and other papers, except for written assertions pursuant to § 1.27(c)(2)(ii) of this part, filed in the application must be signed by:

(1)**>A patent practitioner of record appointed in compliance with § 1.32(b);<

(2)**>A patent practitioner not of record who acts in a representative capacity under the provisions of § 1.34;<

(3)An assignee as provided for under § 3.71(b) of this chapter; or

(4)All of the applicants (§ 1.41(b)) for patent, unless there is an assignee of the entire interest and such assignee has taken action in the application in accordance with § 3.71 of this chapter.

(c)All notices, official letters, and other communications for the patent owner or owners in a reexamination proceeding will be directed to the attorney or agent of record (*see* § 1.32(b)) in the patent file at the address listed on the register of patent attorneys and agents maintained pursuant to §§ 11.5 and 11.11 of this subchapter, or if no attorney or agent is of record, to the patent owner or owners at the address or addresses of record. Amendments and other papers filed in a reexamination proceeding on behalf of the patent owner must be signed by the patent owner, or if there is more than one owner by all the owners, or by an attorney or agent of record in the patent file, or by a registered attorney or agent not of record who acts in a representative capacity under the provisions of § 1.34. Double correspondence with the patent owner or owners and the patent owner's attorney or agent, or with more than one attorney or agent, will not be undertaken. If more than one attorney or agent is of record and a correspondence address has not been specified, correspondence will be held with the last attorney or agent made of record.

(d)A "correspondence address" or change thereto may be filed with the Patent and Trademark Office during the enforceable life of the patent. The "correspondence address" will be used in any correspondence relating to maintenance fees unless a separate "fee address" has been specified. See § 1.363 for "fee address" used solely for maintenance fee purposes.>

(e)A change of address filed in a patent application or patent does not change the address for a patent practitioner in the roster of patent attorneys and agents. See § 11.11 of this title.<

Best Available Copy

- **Further:**

  —Petitioner is given two (2) months within which Petitioner **must** timely, properly and reasonably Notice and confer with Counsel for the Assignee, and submit jointly a statement of the management of the prosecution of the instant matter—Petitioner **must** make a proper documentary showing into the record as to satisfaction of this requirement for Notice to Counsel for Assignee;

  —alternatively, Petitioner and Counsel for Assignee **must** present their respective arguments as to their respective positions in the instant matter arguments as to the conflicting positions in the instant matter.

No extension(s) of time will be available.

---

37 CFR 1.33(a) provides for an applicant to supply an address to receive correspondence from the U.S. Patent and Trademark Office so that the Office may direct mail to any address of applicant's selection, such as a corporate patent department, a firm of attorneys or agents, or an individual attorney, agent, or other person.

37 CFR 1.33(a) provides that in a patent application the applicant must specify a correspondence address to which the Office will send notices, letters and other communications relating to the application. The correspondence address must appear either in an application data sheet (37 CFR 1.76) or in a clearly identifiable manner elsewhere in any papers submitted with an application filing. Where more than one correspondence address is specified, the Office will **>select one of the correspondence addresses for use< as the correspondence address. This is intended to cover, for example, the situation where the application is submitted with multiple addresses, such as one correspondence address being given in the application transmittal letter, and a different one in an accompanying 37 CFR 1.63 oath or declaration, or other similar situations. The **>Office will select which of the multiple correspondence addresses to use according to the following order: (A) application data sheet (ADS); (B) application transmittal; (C) oath or declaration (unless power of attorney is more current); and (D) power of attorney.< If more than one correspondence address is specified in a single document, the Office will *>select< the address associated with a Customer Number over a typed correspondence address.

37 CFR 1.33(a) requests the submission of a daytime telephone number of the party to whom correspondence is to be addressed. While business is to be conducted on the written record (37 CFR 1.2), a daytime telephone number would be useful in initiating contact that could later be reduced to writing. The telephone number would be changeable by any party who could change the correspondence address.

37 CFR 1.33(a)(1) provides that any party filing the application and setting forth a correspondence address could later change the correspondence address provided that a 37 CFR 1.63 oath/declaration by any of the inventors has not been submitted. If one joint inventor filed an application, the person who may change the correspondence address would include only the one inventor who filed the application, even if another inventor was identified on the application transmittal letter. If two of three inventors filed the application, the two inventors filing the application would be needed to change the correspondence address. Additionally, any registered practitioner named in the application transmittal letter, or a person who has the authority to act on behalf of the party that will be the assignee (if the application was filed by the party that will be the assignee), could change the correspondence address. A registered practitioner named in a letterhead would not be sufficient, but rather a clear identification of the individual as being a representative would be required. A company (to whom the invention has been assigned, or to whom there is an obligation to assign the invention) who files an application, is permitted to designate the correspondence address, and to change the correspondence address, until such time as a (first) 37 CFR 1.63 oath/declaration is filed. The mere filing of a 37 CFR 1.63 oath/declaration that does not include a correspondence address does not affect any correspondence address previously established on the filing of the application, or changed per 37 CFR 1.63(a)(1), even if the application was filed by a company that is only a partial assignee. The expression "party that will be the assignee," rather than assignee, is used in that until a declaration is submitted, inventors have only been identified, and any attempted assignment, or partial assignment, cannot operate for Office purposes until the declaration is supplied. Hence, if the application transmittal letter indicates that the application is being filed on behalf of XYZ company, with an assignment to be filed later, XYZ company would be allowed to change the correspondence address without resort to 37 CFR 3.73(b) until an executed oath or declaration is filed, and with resort to 37 CFR 3.73(b) after the oath or declaration is filed.

Where a correspondence address was set forth or changed pursuant to 37 CFR 1.33(a)(1) (prior to the filing of a 37 CFR 1.63 oath or declaration), that correspondence address remains in effect upon filing of a 37 CFR 1.63 declaration and can then only be changed pursuant to 37 CFR 1.33(a)(2).

37 CFR 1.33 states that when an attorney or agent has been duly appointed to prosecute an application, correspondence will be held with the attorney or agent unless some other correspondence address has been given. If an attorney or agent of record assigns a correspondence address which is different than an address where the attorney or agent normally receives mail, the attorney or agent is reminded that 37 CFR 10.57 requires the attorney or agent to keep information obtained by attorney/agent – client relationship in confidence. Double correspondence with an applicant and his or her attorney, or with two representatives, will not be undertaken. See MPEP § 403.01, § 403.02, and § 714.01(d).

Best Available Copy

BACKGROUND

In the petition filed on 23 June, 2010, Petitioner Adam J. Cermak (Reg. No. 40,391) contends that Mr. Bonhoeffer and JenaValve jointly hold interest in the instant application and that they are not able to agree as to prosecution of the instant matter.

This contention is called into question by the submissions of 28 July, 2010 executed by representatives of Mr. Bonhoeffer and JenaValve.

Moreover, it is not the practice of the Office to undertake double correspondence. (*See*: MPEP § 403.01, § 403.02, and § 714.01(d).)

In addition, a fundamental requirement for invocation of the provisions of to 37 C.F.R §1.183 is "an extraordinary situation when justice requires." As of this writing—and particularly in view of the 21 July, 2010, filing—no such showing has been made herein.

Nonetheless, Petitioner seeks to import into the instant application provisions of a decision rendered in another application (Application No. 10/210,084) more than two (2) years ago and under different then-existing circumstances/facts.

CONCLUSION

Accordingly:

- the petition considered pursuant to considered pursuant to 37 C.F.R §1.182 and §1.183 is **DISMISSED** without prejudice;

- further:

  —Petitioner is given two (2) months within which Petitioner **must** timely, properly and reasonably Notice and confer with Counsel for the Assignee, and submit jointly a statement of the management of the prosecution of the instant matter—Petitioner must make a proper documentary showing into the record as to satisfaction of this requirement for Notice to Counsel for Assignee;

  —alternatively, Petitioner and Counsel for Assignee **must** present their respective arguments as to their respective positions in the instant matter.

No extension(s) of time will be available.

Best Available Copy

Telephone inquiries regarding this decision may be directed to the undersigned at (571) 272-3214—it is noted, however, that all practice before the Office is in writing (see: 37 C.F.R. §1.2[3]) and the proper authority for action on any matter in this regard are the statutes (35 U.S.C.), regulations (37 C.F.R.) and the commentary on policy (MPEP). Therefore, no telephone discussion may be controlling or considered authority for Petitioner's action(s).

/John J. Gillon, Jr./
John J. Gillon, Jr.
Senior Attorney
Office of Petitions

CC
CERNAK NAKAJIMA LLP
127 S. PEYTON STREET/STE. 210
ALEXANDRIA, VA 22314

[3] The regulations at 37 C.F.R. §1.2 provide:
§1.2 Business to be transacted in writing.
All business with the Patent and Trademark Office should be transacted in writing. The personal attendance of Petitioners or their attorneys or agents at the Patent and Trademark Office is unnecessary. The action of the Patent and Trademark Office will be based exclusively on the written record in the Office. No attention will be paid to any alleged oral promise, stipulation, or understanding in relation to which there is disagreement or doubt.

UNITED STATES PATENT AND TRADEMARK OFFICE

Commissioner for Patents
United States Patent and Trademark Office
P.O. Box 1450
Alexandria, VA 22313-1450
www.uspto.gov

O'BRIEN JONES, PLLC
1951 KIDWELL DRIVE
SUITE 550 B
TYSONS CORNER VA 22182

MAILED
MAY 10 2011
OFFICE OF PETITIONS

In re Application of :
Bonhoeffer, et al. :
Application No. 12/407,342 : DECISION ON PETITION
Filed: 13 March, 2009 :
Attorney Docket No. 1017.0001-04 :

This is a decision on the petition filed on 3 March, 2011, requesting appointment of more than one representative herein, and considered pursuant to 37 C.F.R §1.182 and §1.183 for waiver as to the regulations at 37 C.F.R §1.32 and the guidance provided in the Commentary at MPEP §402.10 and §403, *et seq.*

NOTES:

In the original petition of 23 June, 2010, Petitioner Adam J. Cermak (Mr. Cermak) (Reg. No. 40,391), who never was empowered to prosecute the instant application, contended that Mr. Bonhoeffer and JenaValve jointly held interest in the instant application and that they were not able to agree as to prosecution of the instant matter.[1]

Notwithstanding the representations of the 23 June, 2010, petition as to the inability of the parties to confer and agree upon prosecution, a subsequent paper filed in the form of a 21 July, 2010, Election (in response to the 22 January, 20010, Office action (Requirement for Restriction) was executed by Mr. Cermak on behalf of the co-inventor Philipp Bonhoeffer, and by Susanne T. Jones (Ms. Jones) (Reg. No. 44,472) on behalf of co-inventor/co-applicant Younes Boudjemline and averred partial assignee Jena Valve Technology.

In the dismissal of 4 January, 2011, Petitioner was requested:

[1] This contention was called into question by the subsequent 21 July, 2010, Election (in response to the 22 January, 20010, Office action (Requirement for Restriction) executed by representatives of Mr. Bonhoeffer and JenaValve (with the co-inventor Younes Boudjemline). Also, Petitioner sought to import into the instant application provisions of a decision rendered in another application (Application No. 10/210,084) more than two (2) years ago.

- To ensure that Ms. Jones, on behalf of co-inventor/co-applicant Younes Boudjemline and averred partial assignee Jena Valve Technology, be Noticed in any matter herein; and

- To make on joint petition any request for relief such as that sought herein.

BACKGROUND

A review of the record reveals:

- In the petition filed on 23 June, 2010, Petitioner Adam J. Cermak (Reg. No. 40,391) contended that Mr. Bonhoeffer and JenaValve jointly hold interest in the instant application and that they are not able to agree as to prosecution of the instant matter. This contention was called into question by the submissions of 28 July, 2010 executed by representatives of Mr. Bonhoeffer and JenaValve. The petition was dismissed on 4 January, 2011.

- On 3 March, 2011, Petitioners/Counsel Ms. Jones and Mr. Cermak jointly submitted the instant petition.

- A fundamental requirement for invocation of the provisions of to 37 C.F.R §1.183 is "an extraordinary situation when justice requires." (Emphasis supplied.) The conclusion of the Office is that such a showing finally was made in the petition of 3 March, 2011.

The petition fee required under 37 CFR 1.17(f) has been received.[2]

It is not the practice of the Office to undertake double correspondence. (*See*: MPEP § 403.01, § 403.02, and § 714.01(d).)

In essence, Petitioners request that powers of attorney to different representatives from co-inventors Philipp Bonhoeffer and Younes Boudjemline (and Jena Valve Technology) be accepted.

Petitioners further request that all correspondence be sent to the correspondence address associated with the Customer Number 68540 (OBRIEN JONES PLLC, Susanne T. Jones), who will forward correspondence to practitioner Cermak.

The availability of applications and application papers online to applicants/practitioners who diligently associate their Customer Number with the respective application(s) now provides an applicant/practitioner on-demand information as to events/transactions in an application.

[2] See: 37 C.F.R. §1.36(a).

Out of an abundance of caution, Petitioners always are reminded that those registered to practice and all others who make representations before the Office **must** inquire into the underlying facts of representations made to the Office and support averments with the appropriate documentation–since all owe to the Office the continuing duty to disclose.[3]

CONCLUSION

Accordingly, the petition considered pursuant to 37 C.F.R §1.183 (in view of the guidance in the Commentary at MPEP §403, *et seq.*) and §1.182 is **GRANTED** as follows:

- In accordance with MPEP 402.10, to ensure that all interests are properly and effectively represented, all further correspondence to the U.S. Patent and Trademark Office (USPTO) **must** be signed by a practitioner associated with Customer Number 68540 (OBRIEN JONES PLLC, Susanne T. Jones) on behalf of co-inventor Boudjemline, **and** by Adam J. Cermak on behalf of co-inventor Bonhoeffer—or any other representative they appoint; and

- Each attorney signing subsequent papers **must** indicate whom he or she represents.

In view of applicants' request, papers will be sent to the address associated with Customer Number 68540 (OBRIEN JONES PLLC, Susanne T. Jones).

All parties are reminded that dual correspondence is not permitted and will not be undertaken by the USPTO.

It is noted that, notwithstanding this decision, the inventors may still **jointly** appoint or revoke a power of attorney.

The application is being forwarded to the Office of Patent Application Processing for such processing as might be necessary to capture any required correspondence information before being returned to the Technology Center/AU 3731 for further processing in due course.

[3] See supplement of 17 June, 1999. The Patent and Trademark Office is relying on petitioner's duty of candor and good faith and accepting a statement made by Petitioner. See Changes to Patent Practice and Procedure, 62 Fed. Reg. at 53160 and 53178, 1203 Off. Gaz. Pat. Office at 88 and 103 (responses to comments 64 and 109)(applicant obligated under 37 C.F.R. §10.18 to inquire into the underlying facts and circumstances when providing statements to the Patent and Trademark Office).

Telephone inquiries regarding this decision may be directed to the undersigned at (571) 272-3214—it is noted, however, that all practice before the Office is in writing (see: 37 C.F.R. §1.2[4]) and the proper authority for action on any matter in this regard are the statutes (35 U.S.C.), regulations (37 C.F.R.) and the commentary on policy (MPEP). Therefore, no telephone discussion may be controlling or considered authority for Petitioner's action(s).

/John J. Gillon, Jr./
John J. Gillon, Jr.
Senior Attorney
Office of Petitions

CC
CERNAK NAKAJIMA LLP
127 S. PEYTON STREET/STE. 210
ALEXANDRIA, VA 22314

[4] The regulations at 37 C.F.R. §1.2 provide:
§1.2 Business to be transacted in writing.
All business with the Patent and Trademark Office should be transacted in writing. The personal attendance of Petitioners or their attorneys or agents at the Patent and Trademark Office is unnecessary. The action of the Patent and Trademark Office will be based exclusively on the written record in the Office. No attention will be paid to any alleged oral promise, stipulation, or understanding in relation to which there is disagreement or doubt.

UNITED STATES PATENT AND TRADEMARK OFFICE

Commissioner for Patents
United States Patent and Trademark Office
P.O. Box 1450
Alexandria, VA 22313-1450
www.uspto.gov

MAHAMEDI PARADICE KREISMAN LLP
550 WINCHESTER BOULEVARD
SUITE 605
SAN JOSE, CA 95128

MAILED

FEB 22 2012

OFFICE OF PETITIONS

In re Application of
Robert Fleming, et al.
Application No. 12/407,346
Filed: March 19, 2009
Attorney Docket No.: SHOK.P116

: DECISION ON PETITION
: UNDER 37 CFR 1.78(a)(3)

This is a decision on the petition under 37 CFR 1.78(a)(3), filed January 11, 2012, to accept an unintentionally delayed claim under 35 U.S.C. § 120 for the benefit of priority to the prior-filed nonprovisional application set forth in the amendment filed with the petition.

The petition is **GRANTED**.

A petition for acceptance of a claim for late priority under 37 CFR 1.78(a)(3) is only applicable to those applications filed on or after November 29, 2000. Further, the petition is appropriate only after the expiration of the period specified in 37 CFR 1.78(a)(2)(ii). In addition, the petition under 37 CFR 1.78(a)(3) must be accompanied by:

> **(1)** the reference required by 35 U.S.C. § 120 and 37 CFR 1.78(a)(2)(i) and (iii) of the prior-filed application(s), unless previously submitted;[1]
> **(2)** the surcharge set forth in § 1.17(t); and
> **(3)** a statement that the entire delay between the date the claim was due under 37 CFR 1.78(a)(2)(ii) and the date the claim was filed was unintentional. The Director may require additional information where there is a question whether the delay was unintentional.

All of the above requirements having been satisfied, the late claim for priority under 35 U.S.C. § 120 is accepted as being unintentionally delayed.

[1] Any nonprovisional application or international application designating the United States of America claiming the benefit of one or more prior-filed copending applications or international applications designating the United States of America must contain or be amended to contain a reference (amendment to the first line of the specification following the title or in an application data sheet (ADS) to each such prior-filed application, identifying it by application number (consisting of the series code and serial number) or international application number and international filing date filing date and indicating the relationship of the applications. Cross references to other related applications may be made when appropriate (*see* § 1.14).

The granting of the petition to accept the delayed benefit claim to the prior-filed application(s) under 37 CFR 1.78(a)(3) should not be construed as meaning that this application is entitled to the benefit of the prior-filed application(s). In order for this application to be entitled to the benefit of the prior-filed application(s), all other requirements under 35 U.S.C. § 120 and 37 CFR 1.78(a)(1) and (a)(2) must be met. Similarly, the fact that the corrected Filing Receipt accompanying this decision on petition includes the prior-filed application(s) should not be construed as meaning that applicant is entitled to the claim for benefit of priority to the prior-filed application(s) noted thereon. Accordingly, the examiner will, in due course, consider this benefit claim and determine whether the application is entitled to the benefit of the earlier filing date.

A corrected Filing Receipt, which includes the priority claim to the prior-filed nonprovisional applications, accompanies this decision on petition.

This application is being forwarded to Technology Center Art Unit 1766 for consideration by the examiner of applicant's entitlement to claim benefit of priority under 35 U.S.C. § 120 to the prior-filed application.

Inquiries concerning this decision may be directed to the undersigned at (571) 272-3204. All other inquiries concerning the status of the application should be directed to the Technology Center.

/SDB/

Sherry D. Brinkley
Petitions Examiner
Office of Petitions

Attachment: Corrected Filing Receipt

UNITED STATES PATENT AND TRADEMARK OFFICE

UNITED STATES DEPARTMENT OF COMMERCE
United States Patent and Trademark Office
Address: COMMISSIONER FOR PATENTS
P.O. Box 1450
Alexandria, Virginia 22313-1450
www.uspto.gov

APPLICATION NUMBER	FILING or 371(c) DATE	GRP ART UNIT	FIL FEE REC'D	ATTY.DOCKET.NO	TOT CLAIMS	IND CLAIMS
12/407,346	03/19/2009	1766	1220	SHOK.P116	20	3

CONFIRMATION NO. 7155

CORRECTED FILING RECEIPT

30554
MAHAMEDI PARADICE KREISMAN LLP
550 Winchester Boulevard
Suite 605
SAN JOSE, CA 95128

Date Mailed: 02/06/2012

Receipt is acknowledged of this non-provisional patent application. The application will be taken up for examination in due course. Applicant will be notified as to the results of the examination. Any correspondence concerning the application must include the following identification information: the U.S. APPLICATION NUMBER, FILING DATE, NAME OF APPLICANT, and TITLE OF INVENTION. Fees transmitted by check or draft are subject to collection. Please verify the accuracy of the data presented on this receipt. **If an error is noted on this Filing Receipt, please submit a written request for a Filing Receipt Correction. Please provide a copy of this Filing Receipt with the changes noted thereon. If you received a "Notice to File Missing Parts" for this application, please submit any corrections to this Filing Receipt with your reply to the Notice. When the USPTO processes the reply to the Notice, the USPTO will generate another Filing Receipt incorporating the requested corrections**

Applicant(s)

Robert Fleming, San Jose, CA;
Lex Kosowsky, San Jose, CA;
Ning Shi, San Jose, CA;
Junjun Wu, Woodbury, MN;

Power of Attorney: The patent practitioners associated with Customer Number 30554

Domestic Priority data as claimed by applicant

This appln claims benefit of 61/039,782 03/26/2008
and is a CIP of 11/602,881 11/21/2006 PAT 7923844

Foreign Applications (You may be eligible to benefit from the **Patent Prosecution Highway** program at the USPTO. Please see http://www.uspto.gov for more information.)

If Required, Foreign Filing License Granted: 03/30/2009

The country code and number of your priority application, to be used for filing abroad under the Paris Convention, is **US 12/407,346**

Projected Publication Date: Not Applicable

Non-Publication Request: No

Early Publication Request: No

Title

VOLTAGE SWITCHABLE DIELECTRIC MATERIALS WITH LOW BAND GAP POLYMER BINDER OR COMPOSITE

Preliminary Class

252

PROTECTING YOUR INVENTION OUTSIDE THE UNITED STATES

Since the rights granted by a U.S. patent extend only throughout the territory of the United States and have no effect in a foreign country, an inventor who wishes patent protection in another country must apply for a patent in a specific country or in regional patent offices. Applicants may wish to consider the filing of an international application under the Patent Cooperation Treaty (PCT). An international (PCT) application generally has the same effect as a regular national patent application in each PCT-member country. The PCT process **simplifies** the filing of patent applications on the same invention in member countries, but **does not result** in a grant of "an international patent" and does not eliminate the need of applicants to file additional documents and fees in countries where patent protection is desired.

Almost every country has its own patent law, and a person desiring a patent in a particular country must make an application for patent in that country in accordance with its particular laws. Since the laws of many countries differ in various respects from the patent law of the United States, applicants are advised to seek guidance from specific foreign countries to ensure that patent rights are not lost prematurely.

Applicants also are advised that in the case of inventions made in the United States, the Director of the USPTO must issue a license before applicants can apply for a patent in a foreign country. The filing of a U.S. patent application serves as a request for a foreign filing license. The application's filing receipt contains further information and guidance as to the status of applicant's license for foreign filing.

Applicants may wish to consult the USPTO booklet, "General Information Concerning Patents" (specifically, the section entitled "Treaties and Foreign Patents") for more information on timeframes and deadlines for filing foreign patent applications. The guide is available either by contacting the USPTO Contact Center at 800-786-9199, or it can be viewed on the USPTO website at http://www.uspto.gov/web/offices/pac/doc/general/index.html.

For information on preventing theft of your intellectual property (patents, trademarks and copyrights), you may wish to consult the U.S. Government website, http://www.stopfakes.gov. Part of a Department of Commerce initiative, this website includes self-help "toolkits" giving innovators guidance on how to protect intellectual property in specific countries such as China, Korea and Mexico. For questions regarding patent enforcement issues, applicants may call the U.S. Government hotline at 1-866-999-HALT (1-866-999-4158).

LICENSE FOR FOREIGN FILING UNDER

Title 35, United States Code, Section 184

Title 37, Code of Federal Regulations, 5.11 & 5.15

GRANTED

The applicant has been granted a license under 35 U.S.C. 184, if the phrase "IF REQUIRED, FOREIGN FILING LICENSE GRANTED" followed by a date appears on this form. Such licenses are issued in all applications where

the conditions for issuance of a license have been met, regardless of whether or not a license may be required as set forth in 37 CFR 5.15. The scope and limitations of this license are set forth in 37 CFR 5.15(a) unless an earlier license has been issued under 37 CFR 5.15(b). The license is subject to revocation upon written notification. The date indicated is the effective date of the license, unless an earlier license of similar scope has been granted under 37 CFR 5.13 or 5.14.

This license is to be retained by the licensee and may be used at any time on or after the effective date thereof unless it is revoked. This license is automatically transferred to any related applications(s) filed under 37 CFR 1.53(d). This license is not retroactive.

The grant of a license does not in any way lessen the responsibility of a licensee for the security of the subject matter as imposed by any Government contract or the provisions of existing laws relating to espionage and the national security or the export of technical data. Licensees should apprise themselves of current regulations especially with respect to certain countries, of other agencies, particularly the Office of Defense Trade Controls, Department of State (with respect to Arms, Munitions and Implements of War (22 CFR 121-128)); the Bureau of Industry and Security, Department of Commerce (15 CFR parts 730-774); the Office of Foreign AssetsControl, Department of Treasury (31 CFR Parts 500+) and the Department of Energy.

NOT GRANTED

No license under 35 U.S.C. 184 has been granted at this time, if the phrase "IF REQUIRED, FOREIGN FILING LICENSE GRANTED" DOES NOT appear on this form. Applicant may still petition for a license under 37 CFR 5.12, if a license is desired before the expiration of 6 months from the filing date of the application. If 6 months has lapsed from the filing date of this application and the licensee has not received any indication of a secrecy order under 35 U.S.C. 181, the licensee may foreign file the application pursuant to 37 CFR 5.15(b).

SelectUSA

The United States represents the largest, most dynamic marketplace in the world and is an unparalleled location for business investment, innovation and commercialization of new technologies. The USA offers tremendous resources and advantages for those who invest and manufacture goods here. Through SelectUSA, our nation works to encourage, facilitate, and accelerate business investment. To learn more about why the USA is the best country in the world to develop technology, manufacture products, and grow your business, visit SelectUSA.gov.

UNITED STATES PATENT AND TRADEMARK OFFICE

Commissioner for Patents
United States Patent and Trademark Office
P.O. Box 1450
Alexandria, VA 22313-1450
www.uspto.gov

CRAWFORD MAUNU PLLC
1150 NORTHLAND DRIVE, SUITE 100
ST. PAUL, MN 55120

MAILED
FEB 10 2011
OFFICE OF PETITIONS

In re Application of Schwartz et al. :
Application No. 12/407,349 : Decision on Petition
Filing Date: March 19, 2009 :
Attorney Docket No. GTTE.001CIP :

This is a decision on the petition filed October 1, 2010, which is being treated as a petition under 37 CFR 1.137(b) to revive the instant non-provisional application for failure to timely notify the U.S. Patent and Trademark (USPTO) of the filing of an application in a foreign country, or under a multinational treaty that requires publication of applications eighteen months after filing. *See* 37 CFR 1.137(f).

The petition is **GRANTED**.

Petitioner states that the instant nonprovisional application is the subject of an application filed in an eighteen-month publication country on March 11, 2010. However, the USPTO was unintentionally not notified of this filing within 45 days subsequent to the filing of the subject application in an eighteen-month publication country. As a result, this application became abandoned pursuant to 35 U.S.C. § 122(b)(2)(B)(iii) and 37 CFR 1.213(c) for failure to timely notify the Office of the filing of an application in a foreign country or under a multilateral international agreement that requires publication of applications 18 months after filing.

A petition to revive an application abandoned pursuant to 35 U.S.C. 122(b)(2)(B)(iii) for failure to notify the USPTO of a foreign filing must be accompanied by:

(1) the required reply which is met by the notification of such filing in a foreign country or under a multinational treaty;
(2) the petition fee as set forth in 37 CFR 1.17(m); and
(3) a statement that the entire delay in filing the required reply from the due date of the reply until the filing of a grantable petition was unintentional.

The instant petition has been found to be in compliance with the above statute and 37 CFR 1.137(b). Accordingly, the failure to timely notify the USPTO of a foreign or international filing within 45 days after the date of filing of such foreign or international application as provided by

35 U.S.C. § 122(b)(2)(B)(iii) and 37 CFR 1.213(c) is accepted as having been unintentionally delayed.

The previous Request and Certification under 35 U.S.C. § 122(b)(2)(B)(i) has been rescinded. A Notice Regarding Rescission of Nonpublication Request which sets forth the projected publication date of May 19, 2011, accompanies this decision on petition.

Technology Center Art Unit 2612 will be informed of the instant decision and the application will be further examined in due course.

Telephone inquiries regarding this communication should be directed to Petitions Attorney Steven Brantley at (571) 272-3203.

Charles Steven Brantley
Senior Petitions Attorney
Office of Petitions

ATTACHMENT: Notice Regarding Rescission of Nonpublication Request

UNITED STATES PATENT AND TRADEMARK OFFICE

UNITED STATES DEPARTMENT OF COMMERCE
United States Patent and Trademark Office
Address: COMMISSIONER FOR PATENTS
P.O. Box 1450
Alexandria, Virginia 22313-1450
www.uspto.gov

APPLICATION NUMBER	FILING OR 371(C) DATE	FIRST NAMED APPLICANT	ATTY. DOCKET NO./TITLE
12/407,349	03/19/2009	Mark Schwartz	GTTE.001CIP

CONFIRMATION NO. 7159

40581
CRAWFORD MAUNU PLLC
1150 NORTHLAND DRIVE, SUITE 100
ST. PAUL, MN 55120

NONPUBLICATION RESCISSION LETTER

Date Mailed: 02/09/2011

Communication Regarding Rescission Of Nonpublication Request and/or Notice of Foreign Filing

Applicant's rescission of the previously-filed nonpublication request and/or notice of foreign filing is acknowledged. The paper has been reflected in the Patent and Trademark Office's (USPTO's) computer records so that the earliest possible projected publication date can be assigned.

The projected publication date is 05/19/2011.

If applicant rescinded the nonpublication request before or on the date of "foreign filing,"[1] then no notice of foreign filing is required.

If applicant foreign filed the application after filing the above application and before filing the rescission, and the rescission did not also include a notice of foreign filing, then a notice of foreign filing (not merely a rescission) is required to be filed within 45 days of the date of foreign filing. See 35 U.S.C. § 122(b)(2)(B)(iii), and Clarification of the United States Patent and Trademark Office's Interpretation of the Provisions of 35 U.S.C. § 122(b)(2)(B)(ii)-(iv), 1272 Off. Gaz. Pat. Office 22 (July 1, 2003).

If a notice of foreign filing is required and is not filed within 45 days of the date of foreign filing, then the application becomes abandoned pursuant to 35 U.S.C. § 122(b)(2)(B)(iii). In this situation, applicant should either file a petition to revive or notify the Office that the application is abandoned. See 37 CFR 1.137(f). Any such petition to revive will be forwarded to the Office of Petitions for a decision. Note that the filing of the petition will not operate to stay any period of reply that may be running against the application.

Questions regarding petitions to revive should be directed to the Office of Petitions at (571) 272-3282.

[1] Note, for purpose of this notice, that "foreign filing" means "filing an application directed to the same invention in another country, or under a multilateral international agreement, that requires publication of applications 18 months after filing".

/scbrantley/

Office of Data Management, Application Assistance Unit (571) 272-4000, or (571) 272-4200, or 1-888-786-0101

UNITED STATES PATENT AND TRADEMARK OFFICE

UNITED STATES DEPARTMENT OF COMMERCE
United States Patent and Trademark Office
Address: COMMISSIONER FOR PATENTS
P.O. Box 1450
Alexandria, Virginia 22313-1450
www.uspto.gov

APPLICATION NO.	FILING DATE	FIRST NAMED INVENTOR	ATTORNEY DOCKET NO.	CONFIRMATION NO.
12/407,351	03/19/2009	Kanako Nakayama	TOSHP389US	7163

7590 05/10/2011

TUROCY & WATSON, LLP
127 Public Square
57th Floor, Key Tower
CLEVELAND, OH 44114

EXAMINER	
MARMOR II, CHARLES ALAN	

ART UNIT	PAPER NUMBER
3735	

NOTIFICATION DATE	DELIVERY MODE
05/10/2011	ELECTRONIC

DECISION GRANTING PETITION UNDER 37 CFR 1.138(d)

The declaration of express abandonment is recognized

This is in response to the petition under 37 CFR 1.138(d), requesting for a refund of any previously paid search fee and excess claims fee in the above-identified application.

The petition is granted.

The express abandonment is recognized. Any previously paid search fee and excess claims fee are hereby refunded.

Telephone inquiries should be directed to the Office of Data Management at (571) 272-4200.

Betty Powell

Patent Publication Branch
Office of Data Management

UNITED STATES PATENT AND TRADEMARK OFFICE

Commissioner for Patents
United States Patent and Trademark Office
P.O. Box 1450
Alexandria, VA 22313-1450
www.uspto.gov

FINNEGAN, HENDERSON, FARABOW, GARRETT & DUNNER LLP
901 NEW YORK AVENUE, NW
WASHINGTON, DC 20001-4413

MAILED
DEC 07 2010
OFFICE OF PETITIONS

Applicants: Maria Dalko.
Appl. No.: 12/407,359
Filing Date: March 19, 2009
Title: USE OF AT LEAST ONE (DIHYDRO)JASMONIC ACID DERIVATIVE FOR TREATING DRY HAIR
Attorney Docket: 05725.1333-01000
Pub. No.: US 2010/0015080 A1
Pub. Date: January 21, 2010

This is a decision on the request for a corrected patent application publication under 37 CFR 1.221(b), received on March 22, 2010, for the above-identified application.

The request is granted.

The corrected patent application publication will be published in due course, unless the patent issues before the application is republished.

Inquiries relating to this matter may be directed to Mark Polutta at (571) 272-7709.

Mark Polutta
Senior Legal Advisor
Office of Patent Legal Administration
Office of the Deputy Commissioner
for Patent Examination Policy

UNITED STATES PATENT AND TRADEMARK OFFICE

UNITED STATES DEPARTMENT OF COMMERCE
United States Patent and Trademark Office
Address: COMMISSIONER FOR PATENTS
P.O. Box 1450
Alexandria, Virginia 22313-1450
www.uspto.gov

APPLICATION NO.	FILING DATE	FIRST NAMED INVENTOR	ATTORNEY DOCKET NO.	CONFIRMATION NO.
12/407,384	03/19/2009	Hirokazu Kyota	1012777-000091	7214

7590 08/05/2011

BUCHANAN, INGERSOLL & ROONEY PC
POST OFFICE BOX 1404
ALEXANDRIA, VA 22313-1404

EXAMINER	
ABU ALI, SHUANGYI	

ART UNIT	PAPER NUMBER
1731	

NOTIFICATION DATE	DELIVERY MODE
08/05/2011	ELECTRONIC

DECISION GRANTING PETITION UNDER 37 CFR 1.138(d)

The declaration of express abandonment is recognized

This is in response to the petition under 37 CFR 1.138(d), requesting for a refund of any previously paid search fee and excess claims fee in the above-identified application.

The petition is granted.

The express abandonment is recognized. Any previously paid search fee and excess claims fee are hereby refunded.

Telephone inquiries should be directed to the Office of Data Management at (571) 272-4200.

Patent Publication Branch
Office of Data Management

UNITED STATES PATENT AND TRADEMARK OFFICE

Commissioner for Patents
United States Patent and Trademark Office
P.O. Box 1450
Alexandria, VA 22313-1450
www.uspto.gov

In re Application of
Robert A. Stevenson

Application No. 12407402

Filed: March 19,2009

Attorney Docket No. GREATB-51885

:
:
:DECISION ON PETITION TO MAKE SPECIAL
:UNDER 37 CFR 1.102(c)(1)
:

This is a decision on the electronic petition under 37 CFR 1.102 (c)(1), filed 07-FEB-2011 to make the above-identified application special based on applicant's age as set forth in MPEP § 708.02, Section IV.

The petition is **GRANTED**.

A grantable petition to make an application special under 37 CFR 1.102(c)(1), MPEP § 708.02, Section IV: Applicant's Age must include a statement by applicant or a registered practitioner having evidence that applicant is at least 65 years of age. No fee is required.

Accordingly, the above-identified application has been accorded "special" status and will be taken up for action by the examiner upon the completion of all pre-examination processing.

Telephone inquiries concerning this electronic decision should be directed to the Electronic Business Center at 866-217-9197.

All other inquiries concerning either the examination or status of the application should be directed to the Technology Center.

UNITED STATES PATENT AND TRADEMARK OFFICE

Commissioner for Patents
United States Patent and Trademark Office
P.O. Box 1450
Alexandria, VA 22313-1450
www.uspto.gov

JACKSON INTELLECTUAL PROPERTY GROUP PLLC
106 STARVALE LANE
SHIPMAN VA 22971

MAILED
DEC 22 2010
OFFICE OF PETITIONS

In re Application of :
I-Sin Peng :
Application No. 12/407,436 : DECISION ON PETITION
Filed: March 19, 2009 :
Attorney Docket No. 7005.145 :

This is a decision on the petition under the unintentional provisions of 37 CFR 1.137(b), filed November 1, 2010, to revive the above-identified application.

The petition is **GRANTED**.

The above-identified application became abandoned for failure to reply in a timely manner to the Notice to File Missing Parts of Nonprovisional Application (Notice) mailed April 1, 2009. The Notice set a period for reply of two (2) months from the mail date of the Notice. No extensions of time under the provisions of 37 CFR 1.136(a) were obtained. Accordingly, the above-identified application became abandoned on June 2, 2009. A Notice of Abandonment was mailed on December 8, 2009.

The petition satisfies the requirements of 37 CFR 1.137(b) in that petitioner has supplied (1) the $65.00 Surcharge fee, the $82.00 Basic filing fee, the $270.00 Search fee, and the $110.00 Examination fee; (2) the petition fee of $810.00, and (3) a proper statement of unintentional delay.

Further, it is not apparent whether the statement of unintentional delay was signed by a person who would have been in a position of knowing that the **entire** delay in filing the required reply from the due date for the reply until the filing of a grantable petition pursuant to 37 CFR 1.137(b) was unintentional. Nevertheless, in accordance with 37 CFR 10.18, the statement is accepted as constituting a certification of unintentional delay. However, in the event that petitioner has no knowledge that the delay was unintentional, petitioner must make such an inquiry to ascertain that, in fact, the delay was unintentional. If petitioner discovers that the delay was intentional, petitioner must notify the Office.

Telephone inquiries concerning this decision should be directed to the undersigned at (571) 272-7751.

This application is being referred to the Office of Patent Application Processing for further processing in accordance with this decision on petition.

Joan Olszewski
Petitions Examiner
Office of Petitions

UNITED STATES PATENT AND TRADEMARK OFFICE

Commissioner for Patents
United States Patent and Trademark Office
P.O. Box 1450
Alexandria, VA 22313-1450
www.uspto.gov

JACKSON INTELLECTUAL PROPERTY GROUP PLLC
106 STARVALE LANE
SHIPMAN VA 22971

MAILED

DEC 14 2010

OFFICE OF PETITIONS

In re Application of
Tsung-Hsi Tsai
Application No. 12/407,466
Filed: March 19, 2009
Attorney Docket Number: 7005.172

ON PETITION

This is a decision on the petition filed November 29, 2010 under 37 CFR 1.137(b), to revive the above-identified application.

The petition is **GRANTED**.

The instant application became abandoned on June 2, 2009, for failure to timely reply to the Notice to File Missing Parts, mailed March 31, 2009, which set a two (2) month shortened statutory period for reply. No extensions of the time for reply in accordance with 37 CFR 1.136(a) were obtained. Accordingly, a Notice of Abandonment was mailed December 8, 2009.

The filing of the response to the Notice to File Missing Parts mailed March 31, 2009 is acknowledged.

All other requirements having been met, this matter is being referred to the Office of Patent Application Processing for further pre-examination processing.

Telephone inquiries concerning this matter may be directed to the undersigned Petitions Attorney at (571) 272-3212.

Patricia Faison-Ball
Senior Petitions Attorney
Office of Petitions

UNITED STATES PATENT AND TRADEMARK OFFICE

UNITED STATES DEPARTMENT OF COMMERCE
United States Patent and Trademark Office
Address: COMMISSIONER FOR PATENTS
P.O. Box 1450
Alexandria, Virginia 22313-1450
www.uspto.gov

APPLICATION NO.	FILING DATE	FIRST NAMED INVENTOR	ATTORNEY DOCKET NO.	CONFIRMATION NO.
12/407,475	03/19/2009	Tomoko YONEMURA	340061US2RD	7395

7590 06/15/2011

OBLON, SPIVAK, MCCLELLAND MAIER & NEUSTADT, L.L.P.
1940 DUKE STREET
ALEXANDRIA, VA 22314

EXAMINER	
TRAN, PHUOC D	

ART UNIT	PAPER NUMBER
2431	

NOTIFICATION DATE	DELIVERY MODE
06/15/2011	ELECTRONIC

DECISION GRANTING PETITION UNDER 37 CFR 1.138(d)

The declaration of express abandonment is recognized

This is in response to the petition under 37 CFR 1.138(d), requesting for a refund of any previously paid search fee and excess claims fee in the above-identified application.

The petition is granted.

The express abandonment is recognized. Any previously paid search fee and excess claims fee are hereby refunded.

Telephone inquiries should be directed to the Office of Data Management at (571) 272-4200.

Patent Publication Branch
Office of Data Management

UNITED STATES PATENT AND TRADEMARK OFFICE

Commissioner for Patents
United States Patent and Trademark Office
P.O. Box 1450
Alexandria, VA 22313-1450
www.uspto.gov

VENABLE LLP
P.O. BOX 34385
WASHINGTON DC 20043-9998

MAILED

SEP 23 2011

OFFICE OF PETITIONS

In re Application of
Robert Charles Wilson
Application No. 12/407,477
Filed: March 19, 2009
Attorney Docket No. 41557-269405

: DECISION GRANTING PETITION
: UNDER 37 CFR 1.313(c)(2)

This is a decision on the petition under 37 CFR 1.313(c)(2), filed, September 21, 2011 to withdraw the above-identified application from issue after payment of the issue fee.

The petition is **GRANTED**.

The above-identified application is withdrawn from issue for consideration of a submission under 37 CFR 1.114 (request for continued examination). *See* 37 CFR 1.313(c)(2).

Petitioner is advised that the issue fee paid on August 25, 2011 cannot be refunded. If, however, this application is again allowed, petitioner may request that it be applied towards the issue fee required by the new Notice of Allowance.[1]

Telephone inquiries should be directed to Terri Johnson at (571) 272-2991.

This application is being referred to Technology Center AU 2821 for processing of the request for continued examination under 37 CFR 1.114 and for consideration of the concurrently filed information disclosure statement.

/Terri Johnson/
Terri Johnson
Petitions Examiner
Office of Petitions

[1] *The request to apply the issue fee to the new Notice may be satisfied by completing and returning the new Part B – Fee(s) Transmittal Form (along with any balance due at the time of submission). Petitioner is advised that the Issue Fee Transmittal Form must be completed and timely submitted to avoid abandonment of the application.*

UNITED STATES PATENT AND TRADEMARK OFFICE

UNITED STATES DEPARTMENT OF COMMERCE
United States Patent and Trademark Office
Address: COMMISSIONER FOR PATENTS
P.O. Box 1450
Alexandria, Virginia 22313-1450
www.uspto.gov

APPLICATION NO.	FILING DATE	FIRST NAMED INVENTOR	ATTORNEY DOCKET NO.	CONFIRMATION NO.
12/407,535	03/19/2009	David L. GINES	20081350-02	7525

22878 7590 10/19/2010

Agilent Technologies, Inc. in care of:
CPA Global
P. O. Box 52050
Minneapolis, MN 55402

EXAMINER	
MULL, FRED H	

ART UNIT	PAPER NUMBER
3662	

NOTIFICATION DATE	DELIVERY MODE
10/19/2010	ELECTRONIC

Please find below and/or attached an Office communication concerning this application or proceeding.

The time period for reply, if any, is set in the attached communication.

Notice of the Office communication was sent electronically on above-indicated "Notification Date" to the following e-mail address(es):

IPOPS.LEGAL@agilent.com
Agilentdocketing@cpaglobal.com

UNITED STATES PATENT AND TRADEMARK OFFICE

Commissioner for Patents
United States Patent and Trademark Office
P.O. Box 1450
Alexandria, VA 22313-1450
www.uspto.gov

OCT 18 2010

Agilent Technologies, Inc. in care of:
CPA Global
P. O. Box 52050
Minneapolis MN 55402

In re Application of	:	
David L. Gines	:	DECISION ON PETITION
Application No. 12/407,535	:	REGARDING REQUEST TO
Filed: March 19, 2009	:	WITHDRAW ACTION
For: METHOD AND SYSTEM FOR	:	UNDER 37 CFR §1.181
LOCATING SIGNAL EMITTERS	:	
USING ITERATIVE RESIDUAL WEIGHING		

This is a decision on the petition under 37 CFR 1.181 filed August 20, 2010 requesting withdrawal of the non-final Office action mailed on May 20, 2010.

The petition is **GRANTED**.

Applicant alleges that the non-final rejection mailed May 10, 2010, which reopened prosecution, is not proper because the Office action presented no new grounds of rejection after an appeal brief was filed.

MPEP 1207.04 provides that the examiner may reopen prosecution to enter a new ground of rejection after an appeal brief has been filed.

A review of the record revels that after an appeal brief was filed, the examiner reopened prosecution on May 4, 2010 with an alleged new 35 USC 112, first paragraph rejection in paragraph 5 of the Office action and added a new objection to the drawings.

Applicant argues that there was already a 35USC 112, first paragraph rejection in the final rejection and that the new rejection is merely a response to applicant's arguments in the appeal brief. Furthermore, a new objection also does not constitute a new ground of rejection. Applicant's arguments are convincing and the non-final Office action mailed May 10, 2010 is hereby vacated. The application will be returned to the examiner for action on the appeal brief.

Any questions regarding this letter should be directed to Supervisory Patent Examiner Thomas H. Tarcza at (571) 272-6979.

Katherine A. Matecki, Director
Technology Center 3600
(571) 272-5250

THT: 9/23/10

LM

UNITED STATES PATENT AND TRADEMARK OFFICE

Commissioner for Patents
United States Patent and Trademark Office
P.O. Box 1450
Alexandria, VA 22313-1450
www.uspto.gov

AGLIENT TECHNOLOGIES, INC. IN CARE OF:
CPA GLOBAL
P.O. BOX 52050
MINNEAPOLIS MN 55402

MAILED
SEP 27 2011
OFFICE OF PETITIONS

In re Application of :
GINES :
Application No. 12/407,535 : DECISION ON PETITION
Filed: March 19, 2009 :
Attorney Docket No. 20081350-02 :

This is a decision on the petition under the unintentional provisions of 37 CFR 1.137(b), filed September 2, 2011, to revive the above-identified application.

The petition is **GRANTED**.

The petition satisfies the conditions for revival pursuant to the provisions of 37 CFR 1.137(b) in that (1) the reply in the form of Replacement Drawings; (2) the petition fee; and (3) the required statement of unintentional delay have been received. Accordingly, the reply to the Notice of Allowance/Notice of Allowability mailed March 25, 2011, is accepted as having been unintentionally delayed.

There is no indication that the petition is signed by a registered patent attorney or patent agent of record. However, in accordance with 37 CFR 1.34, the signature of Mr. Kenneth D. Springer appearing on the correspondence shall constitute a representation to the United States Patent and Trademark Office that he is authorized to represent the particular party in whose behalf he acts. If, Mr. Springer desires to receive correspondence regarding this file, the appropriate power of attorney documents must be submitted. A courtesy copy of this decision is being mailed to Mr. Springer, the petitioner herein. However, until otherwise instructed, all future correspondence regarding this application file will be directed solely to the above-noted correspondence address of record.

Telephone inquiries concerning this decision should be directed to the undersigned at (571) 272-3208.

This application is being referred to the Office of Data Management to be processed into a patent and for review of the drawings submitted with the above petition.

/KOC/
Karen Creasy
Petitions Examiner
Office of Petitions

Cc:

KENNETH D. SPRINGER
VOLENTINE & SHITT, PLLC
11951 FREEDOM DRIVE, 13TH FLOOR
RESTON, VA 20190

UNITED STATES PATENT AND TRADEMARK OFFICE

Commissioner for Patents
United States Patent and Trademark Office
P.O. Box 1450
Alexandria, VA 22313-1450
www.uspto.gov

PROCOPIO, CORY, HARGREAVES & SAVITCH, LLP
525 B STREET
SUITE 2200
SAN DIEGO, CA 92101

MAILED

FEB 15 2011

OFFICE OF PETITIONS

In re Application of
Tom Boyd, et al.
Application No. 12/407,558
Filed: March 19, 2009
Attorney Docket No. 115422-002UTL

DECISION ON PETITION

This is a decision on the petition under 37 CFR 1.181, filed December 30, 2009, requesting withdrawal of the Notice of Abandonment mailed December 24, 2009.

The petition is **GRANTED**.

Petitioner requests withdrawal of the Notice of Abandonment mailed December 17, 2009 for failure to respond to the Notice to File Missing Parts of a Non-provisional Application (Notice) mailed April 3, 2009 be withdrawn as petitioner timely filed a response. As evidenced by the EFS Acknowledgement Receipt and the Fee Worksheet date stamped November 2, 2009 was received by the USPTO. The original reply is in the file.

As the reply authorized the charging of a three (5) month extension of time due was charged to petitioner's deposit account, and the Notice of Abandonment was premature. Accordingly, the holding of abandonment for failure to timely file a reply to the Notice of abandonment mailed December 17, 2009, is hereby **withdrawn** and the application is hereby **restored to pending status**.

Telephone inquiries concerning this decision should be directed to April M. Wise at 571-272-1642. All other inquiries concerning the examination or status of this application should be directed to the Technology Center.

This application is being referred to the Technology Center AU 3714 for appropriate action in the normal course of business of the reply received with the petition.

/Carl Friedman/
Carl Friedman
Petitions Examiner
Office of Petitions

Doc Code: PPH.PCT.652
Document Description: Petition to make special under PCT-Patent Pros Hwy

PTO/SB/20PCT-KR (06-10)
Approved for use through 01/31/2012. OMB 0651-0058
U.S. Patent and Trademark Office; U. S. DEPARTMENT OF COMMERCE
Under the Paperwork Reduction Act of 1995, no persons are required to respond to a collection of information unless it displays a valid OMB control number.

REQUEST FOR PARTICIPATION IN THE PATENT COOPERATION TREATY - PATENT PROSECUTION HIGHWAY (PCT-PPH) PILOT PROGRAM BETWEEN THE KOREAN INTELLECTUAL PROPERTY OFFICE (KIPO) AND THE USPTO

Application No:	12/407,602	Filing date:	03/19/2009
First Named Inventor:	Mark A. Raymond		
Title of the Invention:	Computer-Implemented Method of Optimizing Refraction and TIR Structures to Enhance Path Lengths ..		

THIS REQUEST FOR PARTICIPATION IN THE PCT-PPH PILOT PROGRAM ALONG WITH THE REQUIRED DOCUMENTS MUST BE SUBMITTED VIA EFS-WEB. INFORMATION REGARDING EFS-WEB IS AVAILABLE AT HTTP://WWW.USPTO.GOV/EBC/EFS_HELP.HTML

APPLICANT HEREBY REQUESTS PARTICIPATION IN THE PCT-PPH PROGRAM AND PETITIONS TO MAKE THE ABOVE-IDENTIFIED APPLICATION SPECIAL UNDER THE PCT-PPH PROGRAM.

The above-identified application is (1) a national stage entry of the corresponding PCT application, or (2) a national stage entry of another PCT application which claims priority to the corresponding PCT application, or (3) a national application that claims domestic/ foreign priority to the corresponding PCT application, or (4) a national application which forms the basis for the priority claim in the corresponding PCT application, or (5) a continuing application of a U.S. application that satisfies one of (1) to (4) above, or (6) a U.S. application that claims domestic benefit to a U.S. provisional application which forms the basis for the priority claim in the corresponding PCT application.

The corresponding PCT application number(s) is/are: PCT/US2010/020597

The international date of the corresponding PCT application(s) is/are: 11 January 2010

I. List of Required Documents:

a. **A copy of the latest international work product (WO/ISA, WO/IPEA, or IPER) in the above-identified corresponding PCT application(s)**

☒ Is attached.

☐ Is not attached because the document is already in the U.S. application.

b. **A copy of all claims which were indicated as having novelty, inventive step and industrial applicability in the above-identified corresponding PCT application(s).**

☒ Is attached.

☐ Is not attached because the document is already in the U.S. application.

c. **English translations of the documents in a. and b. above are attached (if the documents are not in the English language). A statement that the English translation is accurate is attached for the document in b. above.**

This collection of information is required by 35 U.S.C. 119, 37 CFR 1.55, and 37 CFR 1.102(d). The information is required to obtain or retain a benefit by the public, which is to file (and by the USPTO to process) an application. Confidentiality is governed by 35 U.S.C. 122 and 37 CFR 1.11 and 1.14. This collection is estimated to take 2 hours to complete, including gathering, preparing, and submitting the completed application form to the USPTO. Time will vary depending upon the individual case. Any comments on the amount of time you require to complete this form and/or suggestions for reducing this burden should be sent to the Chief Information Officer, U.S. Patent and Trademark Office, U.S. Department of Commerce, P.O. Box 1450, Alexandria, VA 22313-1450. DO NOT SEND FEES OR COMPLETED FORMS TO THIS ADDRESS.

Approved for use through 01/31/2012. OMB 0651-0058
U.S.Patent and Trademark Office; U.S. DEPARTMENT OF COMMERCE
Under the Paperwork Reduction Act of 1995, no persons are required to respond to a collection of information unless it displays a valid OMB control number.

REQUEST FOR PARTICIPATION IN THE PCT-PPH PILOT PROGRAM BETWEEN THE KIPO AND THE USPTO

(continued)

Application No.:	
First Named Inventor:	

d. **(1) An information disclosure statement listing the documents cited in the international work products (ISR, WO/ISA, WO/IPEA, IPER) of the corresponding PCT application.**

☐ Is attached

☒ Has already been filed in the above-identified U.S. application on August 31, 2010

(2) Copies of all documents (except) for U.S. patents or U.S. patent application publications)

☐ Are attached.

Have already been filed in the above-identified U.S. application on _____

II. Claims Correspondence Table:

Claims in US Application	Patentable Claims in the corresponding PCT Application	Explanation regarding the correspondence
1-20	50-69	Identical

III. All the claims in the US application sufficiently correspond to the patentable claims in the corresponding PCT application.

Signature /Kent A. Lembke/	Date 09/14/2010
Name (Print/Typed) Kent A. Lembke	Registration Number 44,866

PATENT COOPERATION TREATY

From the INTERNATIONAL SEARCHING AUTHORITY

To:

MARSH FISCHMANN & BREYFOGLE LLP

KENT A. [illegible] Tufts Avenue, Suite 450
Denver, Colorado 80237 USA

RECEIVED
AUG 27 2010
MARSH FISCHMANN &
BREYFOGLE LLP

PCT

NOTIFICATION OF TRANSMITTAL OF THE INTERNATIONAL SEARCH REPORT AND THE WRITTEN OPINION OF THE INTERNATIONAL SEARCHING AUTHORITY, OR THE DECLARATION

(PCT Rule 44.1)

Date of mailing *(day/month/year)* 19 AUGUST 2010 (19.08.2010)	
Applicant's or agent's file reference 50383-00046	**FOR FURTHER ACTION** See paragraphs 1 and 4 below
International application No. **PCT/US2010/020597**	International filing date *(day/month/year)* **11 JANUARY 2010 (11.01.2010)**

Applicant

GENIE LENS TECHNOLOGIES, LLC et al

1. ☒ The applicant is hereby notified that the international search report and the written opinion of the International Searching Authority have been established and are transmitted herewith.

   Filing of amendments and statement under Article 19:

   The applicant is entitled, if he so wishes, to amend the claims of the international application (see Rule 46):

   When? The time limit for filing such amendments is normally two months from the date of transmittal of the international search report.

   Where? Directly to the International Bureau of WIPO, 34 chemin des Colombettes 1211 Geneva 20, Switzerland, Facsimile No.: +41 22 338 82 70

   For more detailed instructions, see *PCT Applicant's Guide*, International Phase, paragraphs 9.004 . 9.011.

2. ☐ The applicant is hereby notified that no international search report will be established and that the declaration under Article 17(2)(a) to that effect and the written opinion of the International Searching Authority are transmitted herewith.

3. ☐ **With regard to any protest** against payment of (an) additional fee(s) under Rule 40.2, the applicant is notified that:

   ☐ the protest together with the decision thereon has been transmitted to the International Bureau together with any request to forward the texts of both the protest and the decision thereon to the designated Offices.

   ☐ no decision has been made yet on the protest; the applicant will be notified as soon as a decision is made.

4. **Reminders**

The applicant may submit comments on an informal basis on the written opinion of the International Searching Authority to the International Bureau. The International Bureau will send a copy of such comments to all designated Offices unless an international preliminary examination report has been or is to be established. Following the expiration of 30 months from the priority date, these comments will also be made available to the public.

Shortly after the expiration of **18 months** from the priority date, the international application will be published by the International Bureau. If the applicant wishes to avoid or postpone publication, a notice of withdrawal of the international application, or of the priority claim, must reach the International Bureau before the completion of the technical preparations for international publication (Rules 90bis.1 and 90bis.3).

Within **19 months** from the priority date, but only in respect of some designated Offices, a demand for international preliminary examination must be filed if the applicant wishes to postpone the entry into the national phase **until 30 months** from the priority date (in some Offices even later); otherwise, the applicant must, **within 20 months** from the priority date, perform the prescribed acts for entry into the national phase before those designated Offices.

In respect of other designated Offices, the time limit of **30 months** (or later) will apply even if no demand is filed within 19months.

For details about the applicable time limits, Office by Office, see www.wipo.int/pct/en/texts/time_limits.html and the PCT Applicant's Guide, National Chapters.

Name and mailing address of the ISA/KR Korean Intellectual Property Office Government Complex-Daejeon, 139 Seonsa-ro, Seo-gu, Daejeon 302-701, Republic of Korea	Authorized officer COMMISSIONER
Facsimile No. 82-42-472-7140	Telephone No. 82-42-481-8753

* Attention

Copies of the documents cited in the international search report can be searched in the following Korean Intellectual Property Office English website for three months from the date of mailing of the international search report.

http://www.kipo.go.kr/en/ => Patent Search => PCT-Service

ID : PCT international application number
PW : **O228CVMH**

Inquiries related to PCT International Search Report or Written Opinion prepared by KIPO as an International Searching Authority can be answered not only by KIPO but also through IPKC (Intellectual Property Korea Center), located in Vienna, VA, which functions as a PCT Help Desk for PCT applicants.

Homepage: http://www.ipkcenter.com
Email: ipkc@ipkcenter.com
Phone: +1 703 388 1066
Fax: +1 703 388 1084

PATENT COOPERATION TREATY

PCT

INTERNATIONAL SEARCH REPORT

(PCT Article 18 and Rules 43 and 44)

Applicant's or agent's file reference	FOR FURTHER ACTION	see Form PCT/ISA/220 as well as, where applicable, item 5 below.
50383-00046		
International application No.	International filing date *(day/month/year)*	(Earliest) Priority Date *(day/month/year)*
PCT/US2010/020597	**11 JANUARY 2010 (11.01.2010)**	16 JANUARY 2009 (16.01.2009)

Applicant

GENIE LENS TECHNOLOGIES, LLC et al

This International search report has been prepared by this International Searching Authority and is transmitted to the applicant according to Article 18. A copy is being transmitted to the International Bureau.

This international search report consists of a total of 3 sheets.

☐ It is also accompanied by a copy of each prior art document cited in this report.

1. **Basis of the report**
   a. With regard to the **language**, the international search was carried out on the basis of :
      ☒ the international application in the language in which it was filed
      ☐ a translation of the international application into _____ , which is the language of a translation furnished for the purposes of international search (Rules 12.3(a) and 23.1(b))
   b. ☐ This international search report has been established taking into account the **rectification of an obvious mistake** authorized by or notified to this Authority under Rule 91 (Rule 43.6*bis*(a)).
   c. ☐ With regard to any **nucleotide and/or amino acid sequence** disclosed in the international application, see Box No. I.
2. ☐ **Certain claims were found unsearchable** (See Box No. II)
3. ☐ **Unity of invention is lacking** (See Box No. III)
4. With regard to the **title**,
   ☒ the text is approved as submitted by the applicant.
   ☐ the text has been established by this Authority to read as follows:
5. With regard to the **abstract**,
   ☒ the text is approved as submitted by the applicant.
   ☐ the text has been established, according to Rule 38.2, by this Authority as it appears in Box No. IV. The applicant may, within one month from the date of mailing of this international search report, submit comments to this Authority.
6. With regard to the drawings,
   a. the figure of the **drawings** to be published with the abstract is Figure No. 23
      ☒ as suggested by the applicant.
      ☐ as selected by this Authority, because the applicant failed to suggest a figure.
      ☐ as selected by this Authority, because this figure better characterizes the invention.
   b. ☐ none of the figure is to be published with the abstract.

INTERNATIONAL SEARCH REPORT

International application No.
PCT/US2010/020597

A. CLASSIFICATION OF SUBJECT MATTER

H01L 31/042(2006.01)i, F24J 2/38(2006.01)i, F24J 2/40(2006.01)i

According to International Patent Classification (IPC) or to both national classification and IPC

B. FIELDS SEARCHED

Minimum documentation searched (classification system followed by classification symbols)

H01L 31/042; G01J 1/42; H01L 31/0232; H01L 31/04

Documentation searched other than minimum documentation to the extent that such documents are included in the fields searched

Korean utility models and applications for utility models
Japanese utility models and applications for utility models

Electronic data base consulted during the international search (name of data base and, where practicable, search terms used)

eKOMPASS(KIPO internal) & Keywords: PV enhancement film, optical path, total internal reflection, light-trapping

C. DOCUMENTS CONSIDERED TO BE RELEVANT

Category*	Citation of document, with indication, where appropriate, of the relevant passages	Relevant to claim No.
X	US 4989972 A1 (DAVID M.BRAUN) 05 February 1991 See abstract, column 4 line 33 - column 5 line 39, figures 1 and 2, claims 1 and 25.	1-49,70,86-97
A	JP 2001-007371 A (NIPPON TELEGR. & TELEPH. CORP.) 12 January 2001 See abstract, paragraphs [0026]-[0038], figures 1 and 2.	1-97
A	JP 06-029562 A (SHARP CORP.) 04 February 1994 See abstract, paragraphs [0007]-[0010], claims 1-3.	1-97

☐ Further documents are listed in the continuation of Box C.

☒ See patent family annex.

* Special categories of cited documents:
"A" document defining the general state of the art which is not considered to be of particular relevance
"E" earlier application or patent but published on or after the international filing date
"L" document which may throw doubts on priority claim(s) or which is cited to establish the publication date of citation or other special reason (as specified)
"O" document referring to an oral disclosure, use, exhibition or other means
"P" document published prior to the international filing date but later than the priority date claimed
"T" later document published after the international filing date or priority date and not in conflict with the application but cited to understand the principle or theory underlying the invention
"X" document of particular relevance; the claimed invention cannot be considered novel or cannot be considered to involve an inventive step when the document is taken alone
"Y" document of particular relevance; the claimed invention cannot be considered to involve an inventive step when the document is combined with one or more other such documents,such combination being obvious to a person skilled in the art
"&" document member of the same patent family

Date of the actual completion of the international search	Date of mailing of the international search report
18 AUGUST 2010 (18.08.2010)	**19 AUGUST 2010 (19.08.2010)**

Name and mailing address of the ISA/KR	Authorized officer
Korean Intellectual Property Office Government Complex-Daejeon, 139 Seonsa-ro, Seo-gu, Daejeon 302-701, Republic of Korea Facsimile No. 82-42-472-7140	OH, Je Uk Telephone No. 82-42-481-8222

Form PCT/ISA/210 (second sheet) (July 2009)

INTERNATIONAL SEARCH REPORT

Information on patent family members

International application No.
PCT/US2010/020597

Patent document cited in search report	Publication date	Patent family member(s)	Publication date
US 4989972 A1	05.02.1991	US 5035770 A1	30.07.1991
JP 2001-007371 A	12.01.2001	None	
JP 06-029562 A	04.02.1994	JP 3238945 B2	17.12.2001

PATENT COOPERATION TREATY

From the
INTERNATIONAL SEARCHING AUTHORITY

To:
MARSH FISCHMANN & BREYFOGLE LLP

KENT A. LEMBKE 8055 East Tufts Avenue, Suite 450
Denver, Colorado 80237 USA

PCT

WRITTEN OPINION OF THE INTERNATIONAL SEARCHING AUTHORITY

(PCT Rule 43bis.1)

Date of mailing *(day/month/year)* **19 AUGUST 2010 (19.08.2010)**

Applicant's or agent's file reference
50383-00046

FOR FURTHER ACTION
See paragraph 2 below

International application No.	International filing date *(day/month/year)*	Priority date *(day/month/year)*
PCT/US2010/020597	**11 JANUARY 2010 (11.01.2010)**	16 JANUARY 2009 (16.01.2009)

International Patent Classification (IPC) or both national classification and IPC

H01L 31/042(2006.01)i, F24J 2/38(2006.01)i, F24J 2/40(2006.01)i

Applicant

GENIE LENS TECHNOLOGIES, LLC et al

1. This opinion contains indications relating to the following items:

- [X] Box No. I Basis of the opinion
- [ ] Box No. II Priority
- [ ] Box No. III Non-establishment of opinion with regard to novelty, inventive step and industrial applicability
- [ ] Box No. IV Lack of unity of invention
- [X] Box No. V Reasoned statement under Rule 43bis.1(a)(i) with regard to novelty, inventive step or industrial applicability; citations and explanations supporting such statement
- [ ] Box No. VI Certain documents cited
- [ ] Box No. VII Certain defects in the international application
- [X] Box No. VIII Certain observations on the international application

2. **FURTHER ACTION**
If a demand for international preliminary examination is made, this opinion will be considered to be a written opinion of the International Preliminary Examining Authority ("IPEA") except that this does not apply where the applicant chooses an Authority other than this one to be the IPEA and the chosen IPEA has notified the International Bureau under Rule 66.1bis(b) that written opinions of this International Searching Authority will not be so considered.

If this opinion is, as provided above, considered to be a written opinion of the IPEA, the applicant is invited to submit to the IPEA a written reply together, where appropriate, with amendments, before the expiration of 3 months from the date of mailing of Form PCT/ISA/220 or before the expiration of 22 months from the priority date, whichever expires later.
For further options, see Form PCT/ISA/220.

3. For further details, see notes to Form PCT/ISA/220.

Name and mailing address of the ISA/KR	Date of completion of this opinion	Authorized officer
Korean Intellectual Property Office Government Complex-Daejeon, 139 Seonsa-ro, Seo-gu, Daejeon 302 -701, Republic of Korea Facsimile No. 82-42-472-7140	18 AUGUST 2010 (18.08.2010)	OH, Je Uk Telephone No.82-42-481-8222

Form PCT/ISA/237 (cover sheet) (July 2009)

WRITTEN OPINION OF THE INTERNATIONAL SEARCHING AUTHORITY

International application No.
PCT/US2010/020597

Box No. I Basis of this opinion

1. With regard to the **language**, this opinion has been established on the basis of :

   ☒ the international application in the language in which it was filed

   ☐ a translation of the international application into _____ , which is the language of a translation furnished for the purposes of international search (Rules 12.3(a) and 23.1(b))

2. ☐ This opinion has been established taking into account the **rectification of an obvious mistake** authorized by or notified to this Authority under Rule 91 (Rule 43*bis*.1(a))

3. With regard to any **nucleotide and/or amino acid sequence** disclosed in the international application, this opinion has been established on the basis of:

   a. a sequence listing filed or furnished
      ☐ on paper
      ☐ in electronic form

   b. time of filing or furnishing
      ☐ contained in the international application as filed.
      ☐ filed together with the international application in electronic form.
      ☐ furnished subsequently to this Authority for the purposes of search.

4. ☐ In addition, in the case that more than one version or copy of a sequence listing has been filed or furnished, the required statements that the information in the subsequent or additioanl copies is identical to that in the application as filed or does not go beyond the application as filed, as appropriate, were furnished.

5. Additional comments:

WRITTEN OPINION OF THE
INTERNATIONAL SEARCHING AUTHORITY

International application No.
PCT/US2010/020597

Box No. V Reasoned statement under Rule 43bis.1(a)(i) with regard to novelty, inventive step or industrial applicability; citations and explanations supporting such statement

1. Statement

Novelty (N)	Claims	1-97	YES
	Claims	NONE	NO
Inventive step (IS)	Claims	50-69,71-85	YES
	Claims	1-49,70,86-97	NO
Industrial applicability (IA)	Claims	1-97	YES
	Claims	NONE	NO

2. Citations and explanations :

Reference is made to the following documents:

D1: US 4989972 A1 (DAVID M. BRAUN) 05 February 1991
D2: JP 2001-007371 A (NIPPON TELEGR. & TELEPH. CORP.) 12 January 2001
D3: JP 06-029562 A (SHARP CORP.) 04 February 1994

1. Novelty (PCT Article 33(2)) and Inventive Step (PCT Article 33(3))

Claims 1 to 15

Claim 1 relates to a solar cell assembly comprising a photovoltaic enhancement film having a substrate positioned proximate to the protective top of a PV device and having a plurality of absorption enhancement structures on the substrate.

D1, which is considered to be the closest prior art to the subject matter of claim 1, discloses a photovoltaic enhancement film having a substrate positioned to the protective top of a PV device and having a plurality of absorption enhancement structures on the substrate.

The subject matter of claim 1 differs from that of D1 in that claim 1 further comprises a light receiving surface to provide an average path length ratio of greater than about 1.10 in the layer of PV material over a range of incident angles. But it would have been obvious to a person skilled in the art to apply the structure in the photovoltaic enhancement film of D1, thereby arriving at the present invention of claim 1. Therefore, the subject matter of claim 1 is novel under PCT Article 33(2) but lacks an inventive step under PCT Article 33(3).

The features of claims 2 to 15, which are dependent on claim 1, are not explicitly disclosed in D1. However, they are merely matters of design option to a person skilled in the art when general knowledge in the relevant field of the art is used. Therefore, the subject matter of claims 2 to 15 is novel, but lacks an inventive step.

(Continued on Supplemental Box)

WRITTEN OPINION OF THE
INTERNATIONAL SEARCHING AUTHORITY

International application No.
PCT/US2010/020597

Box No. VIII Certain observations on the international application

The following observations on the clarity of the claims, description, and drawings or on the question whether the claims are fully supported by the description, are made:

Claims 1, 6, 7, 12, 14, 16, 18, 20, 21, 24, 26, 27, 31, 33, 38, 43, 44, 48, 49, 58, 59, 61, 71, 77, 79, 83, 85, 86, 88, 90, 91, 95, 96 and 97 do not meet the requirements of PCT Article 6 in that the term "about" has an unclear meaning.

Supplemental Box

In case the space in any of the preceding boxes is not sufficient.
Continuation of :

Box No. V

Claims 16 to 22

Claim 16 relates to a photovoltaic apparatus with enhanced absorption in a layer of PV material comprising a plurality of absorption enhancement structures.

D1, which is considered to be the closest prior art to the subject matter of claim 16, discloses a photovoltaic apparatus with enhanced absorption in a layer of PV material comprising a plurality of absorption enhancement structures.

The subject matter of claim 16 differs from that of D1 in that claim 16 further comprises the light incident upon the body over the range of incident angles having a second average path length that is at least about 10 percent greater than the first average path length. But it would have been obvious to a person skilled in the art to apply the structure in the photovoltaic enhancement structures of D1, thereby arriving at the present invention of claim 16. Therefore, the subject matter of claim 16 is novel under PCT Article 33(2) but lacks an inventive step under PCT Article 33(3).

The features of claims 17 to 22, which are dependent on claim 16, are not explicitly disclosed in D1. However, they are merely matters of design option to a person skilled in the art when general knowledge in the relevant field of the art is used. Therefore, the subject matter of claims 17 to 22 is novel, but lacks an inventive step.

Claims 23 to 27

Claim 23 relates to a solar array comprising a PV enhancement film having a substrate and a second surface comprising a plurality of absorption enhancement structures.

D1, which is considered to be the closest prior art to the subject matter of claim 23, discloses a photovoltaic device with enhanced absorption in a layer of PV material comprising a plurality of absorption enhancement structures.

The subject matter of claim 23 differs from that of D1 in that claim 23 further comprises a path length in PV material of the solar cells being greater than a base path length. But it would have been obvious to a person skilled in the art to apply the structure in the photovoltaic enhancement structures of D1, thereby arriving at the present invention of claim 23. Therefore, the subject matter of claim 23 is novel under PCT Article 33(2) but lacks an inventive step under PCT Article 33(3).

The features of claims 24 to 27, which are dependent on claim 23, are not explicitly disclosed in D1. However, they are merely matters of design option to a person skilled in the art when general knowledge in the relevant field of the art is used. Therefore, the subject matter of claims 24 to 27 is novel, but lacks an inventive step.

Claims 28 to 38

The features of claim 28 are substantially the same as those of claim 1 except that claim 28 more includes a plurality of TIR elements on the substrate. However, this additional feature of claim 28 is merely a matter of design option to a person skilled in the art. Accordingly, the subject matter of claim 28 is novel under PCT Article 33(2) but lacks an inventive step under PCT Article 33(3).

(Continued on next page)

Supplemental Box

In case the space in any of the preceding boxes is not sufficient.
Continuation of:

(Previous page)

The features of claims 29 to 38, which are dependent on claim 28, are not explicitly disclosed in D1. However, they are merely matters of design option to a person skilled in the art when general knowledge in the relevant field of the art is used. Therefore, the subject matter of claims 29 to 38 is novel, but lacks an inventive step.

Claims 39 to 45

The features of claim 39 are substantially the same as those of claim 16 except that claim 39 more includes a plurality of TIR elements on the substrate. However, this additional feature of claim 39 is merely a matter of design option to a person skilled in the art. Accordingly, the subject matter of claim 39 is novel under PCT Article 33(2) but lacks an inventive step under PCT Article 33(3).

The features of claims 40 to 45, which refer to claim 39, are not explicitly disclosed in D1. However, they are merely matters of design option to a person skilled in the art when general knowledge in the relevant field of the art is used. Therefore, the subject matter of claims 40 to 45 is novel, but lacks an inventive step.

Claims 46 to 49

The features of claim 46 are substantially the same as those of claim 23 except that claim 46 more includes a plurality of light-trapping structures on the substrate. However, this additional feature of claim 46 is merely a matter of design option to a person skilled in the art. Accordingly, the subject matter of claim 46 is novel under PCT Article 33(2) but lacks an inventive step under PCT Article 33(3).

The features of claims 47 to 49, which refer to claim 46, are not explicitly disclosed in D1. However, they are merely matters of design option to a person skilled in the art when general knowledge in the relevant field of the art is used. Therefore, the subject matter of claims 47 to 49 is novel, but lacks an inventive step.

Claims 50-64 and 71-85

The subject matter of claim 50 differs from these prior art documents in that claim 50 describes the step of determining a set of base path lengths in the PV material layer based on the first ray tracing, and the step of determining a set of enhanced path lengths in the PV material layer based on the second ray tracing. And it is not obvious to a person skilled in the art over the documents individually or in combination. Therefore, the subject matter of claim 50 meets the requirements of PCT Article 33(2) and (3) with respect to novelty and inventive step.

Claims 51 to 64 and claims 71 to 85 are dependent on claim 50 and therefore meet the requirements of PCT Article 33(2) and (3).

(Continued on next page)

Supplemental Box

In case the space in any of the preceding boxes is not sufficient.
Continuation of :

(Previous page)

Claims 65 to 69

The subject matter of claim 65 differs from these prior art documents in that claim 65 describes a path length ratio determination module run by the processor to determine average path length ratios comparing the path lengths associated with each of the absorption enhancement structures with the base path lengths, and an optimization module run by the processor selecting one of absorption enhancement structures based on the determined average path length ratios for the range of incidence angles. And it is not obvious to a person skilled in the art over the documents individually or in combination. Therefore, the subject matter of claim 65 meets the requirements of PCT Article 33(2) and (3) with respect to novelty and inventive step.

The subject matter of claim 66 differs from these prior art documents in that claim 66 describes a ray tracing engine performing a first ray tracing over a range of incidence angles for the PV device, determining a set of base path lengths in the PV material layer based on the first ray tracing, performing a second ray tracing over the range of incidence angles for the PV device modified to include the PV enhancement film. And it is not obvious to a person skilled in the art over the documents individually or in combination. Therefore, the subject matter of claim 66 meets the requirements of PCT Article 33(2) and (3) with respect to novelty and inventive step.

Claims 67 to 69 are dependent on claim 66 and therefore meet the requirements of PCT Article 33(2) and (3).

Claims 70 and 86-93

Claim 70 relates to a method of manufacturing a photovoltaic enhancement film comprising rolling the embossing roller against a first side of the web to form the plurality of absorption enhancement structures.

D1, which is considered to be the closest prior art to the subject matter of claim 70, discloses a photovoltaic apparatus with enhanced absorption in a layer of PV material comprising a plurality of absorption enhancement structures.

The subject matter of claim 70 differs from that of D1 in that claim 70 further comprises feeding a web of transparent material at an extrusion temperature to the extrusion device. But it would have been obvious to a person skilled in the art when general knowledge in the relevant field of the art is used. Therefore, the subject matter of claim 70 is novel under PCT Article 33(2) but lacks an inventive step under PCT Article 33(3).

The technical features of method claim 86 essentially correspond to those of apparatus claim 16, except in the category. The same reasoning applies to claim 86. Therefore, the subject matter of claim 86 is novel, but lacks an inventive step.

The features of claims 87 to 93, which refer to claim 86, are not explicitly disclosed in D1. However, they are merely matters of design option to a person skilled in the art when general knowledge in the relevant field of the art is used. Therefore, the subject matter of claims 87 to 93 is novel, but lacks an inventive step.

(Continued on the next page)

Supplemental Box

In case the space in any of the preceding boxes is not sufficient.
Continuation of :

(The previous page)

Claims 94 to 97

The technical features of method claim 94 essentially correspond to those of apparatus claim 23, except in the category. The same reasoning applies to claim 94. Therefore, the subject matter of claim 94 is novel, but lacks an inventive step.

The features of claims 95 to 97, which refer to claim 94, are not explicitly disclosed in D1. However, they are merely matters of design option to a person skilled in the art when general knowledge in the relevant field of the art is used. Therefore, the subject matter of claims 95 to 97 is novel, but lacks an inventive step.

2. Industrial Applicability (PCT Article 33(4))

Claims 1 to 97 meet the criteria set out in PCT Article 33(4), and thus have industrial applicability because the subject matter claimed can be made or used in industry.

50. A computer-implemented method for optimizing configuration of absorption enhancement structures of a photovoltaic (PV) enhancement film for use in with a PV device to improved efficiency of capturing solar energy with the PV device, comprising:

with an optimization module run by one or more processors of a computer system, receiving optimization run input defining a PV enhancement film including a set of absorption enhancement structures with differing configurations;

modeling a PV device including a layer of PV material;

with a ray tracing engine run by the one or more processors of the computer system, performing a first ray tracing over a range of incidence angles for the PV device;

determining a set of base path lengths in the PV material layer based on the first ray tracing;

with the ray tracing engine, performing a second ray tracing over the range of incidence angles for the PV device modified to include the PV enhancement film comprising a plurality of one of the absorption enhancement structures according to one of the configurations;

determining a set of enhanced path lengths in the PV material layer based on the second ray tracing; and

with the optimization module, determining a set of path length ratios by comparing the enhanced path lengths to the base path lengths.

51. The method of claim 50, further comprising comparing the path length ratios with a stored set of path length ratios and based on the comparing storing design parameters for the one of the absorption enhancement structures as optimized structure parameters for the PV enhancement film.

52. The method of claim 51, further comprising determining whether an additional one of the configurations remains for processing and when an additional one is determined to be remaining, repeating the performing the second ray tracing using the absorption enhancement structures of the additional one of the configurations, the determining of the set of enhanced path lengths, the determining of the set of path length ratios, the comparing, and the storing.

53. The method of claim 51, further comprising outputting the optimized structure parameters and a portion of the optimization run input defining the PV enhancement film to memory of a film fabrication device and operating the film fabrication device to produce a plurality of PV enhancement films for use with PV devices.

54. The method of claim 51, further comprising identifying a subset of the range of incidence angles associated with lower ones of the path length ratios and repeating the performing of the second ray tracing over the subset of the range of incidence angles, the determining of the set of enhanced path lengths, the determining of the set of path length ratios, the comparing to establish a second set of optimized structure parameters, and the storing until there are no additional ones of the configurations remaining for processing.

55. The method of claim 54, further comprising defining a set of the absorption enhancement structures that includes a set of first structures defined by the optimized structure parameters and a set of second structures defined by the second set of optimized structure parameters and storing in memory an optimized design for a PV enhancement film that includes a mixed pattern of the first and second structures.

56. The method of claim 50, wherein the range of incidence angles is a range of angles selected from the range of negative 80 degrees to positive 80 degrees as measured from an orthogonal plane passing through a light-receiving surface of the PV material.

57. The method of claim 56, wherein the range of incidence angles is a range of angles selected from the range of negative 20 degrees to positive 20 degrees as measured from an orthogonal plane passing through a light-receiving surface of the PV material.

58. The method of claim 56, wherein the absorption enhancement structures are configured such that an average of the determined path length ratios is greater than about 1.20 in the layer of PV material over the range of incidence angles.

59. The method of claim 58, wherein the absorption enhancement structures are configured such that the average path length ratio is greater than about 1.50 in the layer of PV material over the range of incidence angles.

60. The method of claim 50, wherein each of the absorption enhancement structures has a body with a pyramid or a frustoconical shape with a base supported on the substrate.

61. The method of claim 50, wherein each of the absorption enhancement structures has a base and a height less than about 10 mils in magnitude.

62. The method of claim 50, wherein each of the absorption enhancement structures comprises an elongated body extending along the length of the substrate and having at least two sides angled inward.

63. The method of claim 50, wherein the differing configurations define for each of the absorption enhancement structures a cross sectional shape and size and wherein the optimization run input further comprises an index of refraction for the PV enhancement film.

64. The method of claim 63, wherein the modeled PV device includes a glass cover layer with an associated index of refraction and thickness for use in the performing of the first and second ray tracings and wherein the optimization run input comprises a thickness for an adhesive layer between the glass cover layer and the PV enhancement film and an index of refraction for the adhesive layer for use in the performing of the first and second ray tracings.

65. A computer system for use in fabricating a photovoltaic (PV) enhancement film for increasing path lengths in a layer of PV material of a PV device, comprising:

a processor for running programs defined by computer code;

memory storing a set of optimization input parameters defining a plurality of absorption enhancement structures and parameters defining the PV device including the layer of PV material;

a ray tracing module run by the processor to perform ray tracings for the PV device to define base path lengths through the layer of PV material for light at a plurality of incidence angles and to perform separate ray tracings for the PV device including a PV enhancement film with each of the absorption enhancement structures, whereby path lengths

are defined through the PV material for the plurality of incidence angles for each of the absorption enhancement structures;

a path length ratio determination module run by the processor to determine average path length ratios comparing the path lengths associated with each of the absorption enhancement structures with the base path lengths; and

an optimization module run by the processor selecting one of absorption enhancement structures based on the determined average path length ratios for the range of incidence angles and storing the optimization input parameters associated with the selected one as optimized structure parameters for the PV enhancement film and the PV device.

66. A computer system for optimizing a PV enhancement film for use with a PV device, comprising:

an optimization run input component that provides optimization run input defining a PV enhancement film including defining parameters for a plurality of differing absorption enhancement structures;

a ray tracing engine performing a first ray tracing over a range of incidence angles for the PV device, determining a set of base path lengths in the PV material layer based on the first ray tracing, performing a second ray tracing over the range of incidence angles for the PV device modified to include the PV enhancement film comprising a plurality of the absorption enhancement structures according to one set of the defining parameters, and determining a set of enhanced path lengths in the PV material layer based on the second ray tracing; and

an structure optimization component determining a set of path length ratios by comparing the enhanced path lengths to the base path lengths and comparing the path length ratios with a stored set of path length ratios, and based on the comparing storing design parameters for the one of the absorption enhancement structures as optimized structure parameters for the PV enhancement film.

67. The system of claim 66, wherein the structure optimization component further determines whether an additional set of the defining parameters remains for processing and when another is determined to be remaining, repeating the performing of the second ray

tracing using the absorption enhancement structures of the additional set of the defining parameters, the determining of the set of enhanced path lengths, the determining of the set of path length ratios, the comparing, and the storing.

68. The system of claim 66, wherein the structure optimization component further identifies a subset of the range of incidence angles associated with lower ones of the path length ratios and repeats the performing of the second ray tracing over the subset of the range of incidence angles, the determining of the set of enhanced path lengths, the determining of the set of path length ratios, the comparing to establish a second set of optimized structure parameters, and the storing until there are not additional ones of the configurations remaining for processing.

69. The system of claim 68, further comprising defining a set of the absorption enhancement structures that includes a set of first structures defined by the optimized structure parameters and a set of second structures defined by the second set of optimized structure parameters and storing in memory an optimized design for a PV enhancement film that includes a mixed pattern of the first and second structures.

70. A method of manufacturing a photovoltaic (PV) enhancement film, comprising:

providing an extrusion device comprising an embossing roller with a surface engraved with a contoured pattern corresponding to a plurality of absorption enhancement structures;

feeding a web of substantially transparent material at an extrusion temperature to the extrusion device; and

rolling the embossing roller against a first side of the web to form the plurality of absorption enhancement structures, wherein the absorption enhancement structures each comprise a light receiving surface that directs at least a portion of light that passes through a second side of the web toward the first side back toward the second side.

71. The method of claim 50, wherein the light receiving surface refracts incident light striking the first side to provide an average path length ratio of greater than about 1.10

when the embossed web is applied over a layer of PV material over a range of incidence angles.

72. The method of claim 51, wherein the average path length ratio is determined as an average of a plurality of path length ratios determined within the range of incidence angles and each of the path length ratios being a path length of the refracted incident light traveling through the PV material after passing through the PV enhancement film compared with a path length of the incident light traveling through the PV material in an absence of the PV enhancement film.

73. The method of claim 52, wherein the plurality of path length ratios is determined based on ray tracings performed at a plurality of angles within the range of incidence angles.

74. The method of claim 53, wherein the range of incidence angles is a range of angles selected from the range of negative 80 degrees to positive 80 degrees as measured from an orthogonal plane passing through a light-receiving surface of the PV material.

75. The method of claim 53, wherein the range of incidence angles is a range of angles selected from the range of negative 20 degrees to positive 20 degrees as measured from an orthogonal plane passing through a light-receiving surface of the PV material.

76. The method of claim 50, wherein each of the absorption enhancement structures comprises an elongated body including at least two sides angled inward.

77. The method of claim 76, wherein each of the absorption enhancement structures has a triangular cross section when taken along a plane passing orthogonal to a longitudinal axis and wherein the sides are angled inward at angles of less than about 60 degrees.

78. The method of claim 76, wherein adjacent ones of the absorption enhancement structures have differing heights as measured from the second side to a peak of the triangular cross section of the absorption enhancement structures.

79. The method of claim 76, wherein each of the absorption enhancement structures comprises three interconnected sides including two sides angled inward at angles of less than about 60 degrees and an upper planar side disposed between the two angled sides that is substantially parallel to the light-receiving surface.

80. The method of claim 50, wherein each of the absorption enhancement structures comprises an elongated body including a semi-circular cross section.

81. The method of claim 50, wherein each of the absorption enhancement structures has a body with a hemispherical shape with a base supported on the substrate.

82. The method of claim 50, wherein each of the absorption enhancement structures has a body with a pyramid or a frustoconical shape with a base supported on the substrate.

83. The method of claim 50, wherein each of the absorption enhancement structures has a base and a height less than about 10 mils in magnitude.

84. The method of claim 50, further comprising cooling the embossed web, applying an adhesive to the second side, and cutting the embossed web into a plurality of PV enhancement films each with a predefined length and width.

85. The method of claim 50, wherein the web material comprises polycarbonate or acrylic, wherein the embossed web has a thickness of less than about 30 mils, wherein the extrusion temperature is at least about 300 °F, and wherein the embossing roller is chilled to a temperature below ambient.

86. A method of fabricating a photovoltaic apparatus with enhanced energy absorption, comprising:

providing a layer of photovoltaic (PV) material that is positioned under a protective layer of substantially transparent material, wherein incident light striking the protective layer over a range of incidence angles has a first average path length through the PV material;

UNITED STATES PATENT AND TRADEMARK OFFICE

UNITED STATES DEPARTMENT OF COMMERCE
United States Patent and Trademark Office
Address: COMMISSIONER FOR PATENTS
P.O. Box 1450
Alexandria, Virginia 22313-1450
www.uspto.gov

APPLICATION NO.	FILING DATE	FIRST NAMED INVENTOR	ATTORNEY DOCKET NO.	CONFIRMATION NO.
12/407,602	03/19/2009	Mark A. Raymond	50383-00041	7658

25231 7590 11/08/2010

MARSH, FISCHMANN & BREYFOGLE LLP
8055 East Tufts Avenue
Suite 450
Denver, CO 80237

EXAMINER	
CHIANG, JACK	

ART UNIT	PAPER NUMBER
2825	

MAIL DATE	DELIVERY MODE
11/08/2010	PAPER

Please find below and/or attached an Office communication concerning this application or proceeding.

The time period for reply, if any, is set in the attached communication.

UNITED STATES PATENT AND TRADEMARK OFFICE

Commissioner for Patents
United States Patent and Trademark Office
P.O. Box 1450
Alexandria, VA 22313-1450
www.uspto.gov

MARSH, FISCHMANN & BREYFOGLE LLP
8055 East Tufts Avenue
Suite 450
Denver CO 80237

In re Application of
RAYMOND et al.
Application No.: 12/407,602
Filed: 19 March 2009
Attorney Docket No.: 50383-00041
For: COMPUTER-IMPLEMENTED METHOD OF OPTIMIZING REFRACTION AND TIR STRUCTURES TO ENHANCE PATH LENGTHS IN PV DEVICES

: DECISION ON REQUEST TO
: PARTICIPATE IN THE PCT PATENT
: PROSECUTION HIGHWAY PILOT
: PROGRAM AND PETITION
: TO MAKE SPECIAL UNDER
: 37 CFR 1.102(d)

This is a decision on the request to participate in the PCT Patent Prosecution Highway (PCT-PPH) pilot program and the petition under 37 CFR 1.102(a), filed 14 September 2010, to make the above-identified application special.

The request and petition are **DISMISSED**.

Discussion

A grantable request to participate in the PCT-PPH pilot program and petition to make special require:

(1) The U.S. application must have an eligible relationship to one or more PCT applications where the ISA or IPEA are the JPO, EPO, KIPO, or USPTO;

(2) At least one claim in the PCT application has novelty, inventive step, and industrial applicability and must be free of any observations in Box VIII in the latest work product in the international stage or applicant must identify and explain why the claim(s) is/are not subject to the observation in Box VIII;

(3) Applicant must submit a copy of the claim(s) from the PCT application(s) that have novelty, inventive step, and industrial applicability along with an English translation thereof and a statement that the English translation is accurate, if the claims are not in the English language;

(4) All the claims in the U.S. application must sufficiently correspond or be amended to sufficiently correspond to the claim(s) that have novelty, inventive step, and industrial applicability in the PCT application(s);

(5) Examination of the U.S. application has not begun;

(6) Applicant must submit a copy of the latest international work product from the PCT application indicating that the claim(s) have novelty, inventive step, and industrial applicability along with an English translation thereof and a statement that the English translation is accurate if the latest international work product is not in the English language;

(7) Applicant must submit an IDS listing the documents cited by the PCT examiner in the international work product along with copies of documents except U.S. patents or U.S. patent application publications.

Conditions (1) and (3-7) above are considered to have been met. However, the request to participate in the PPH pilot program and petition fails meet condition (2).

Regarding the requirement of condition (2), application has failed to identify and explain why the claims are not subject to the observation in Box VIII of the PCT/ISA/237.

Applicant is given **ONE** opportunity within a time period of **ONE MONTH or THIRTY DAYS**, whichever is longer, from the mailing date of this decision to correct the deficiencies. **NO EXTENSION OF TIME UNDER 37 CFR 1.136 IS PERMITTED.** If the deficiencies are not corrected with the time period given, the application will await action in its regular turn.

Response must be filed via the Electronic Filing System (EFS) with the Document Code PPH.PCT.652. Any preliminary amendments and IDS submitted with the PPH documents must be separately indexed as a preliminary amendment and IDS, respectively.

Telephone inquiries concerning this decision should be directed to Lee W. Young at 571-272-4549.

All other inquiries concerning the examination or status of the application is accessible in the PAIR system at http://www.uspto.gov/ebc/index.html.

Lee W. Young
TQAS Technology Center 2800 - Semiconductors,
Electrical & Optical Systems & Components

PATENT APPLICATION

IN THE UNITED STATES PATENT AND TRADEMARK OFFICE

In Re the Application of:	Group Art Unit: 2825
MARK A. RAYMOND	Examiner: Jack Chiang
Serial No.: 12/407,602	
Conf. No.: 7658	SUPPLEMENTAL SUBMITTAL FOR PARTICIPATION ON PPH
Filed: 03/19/2009	
Atty. File No.: 50383-00041	
For: COMPUTER-IMPLEMENTED METHOD OF OPTIMIZING REFRACTION AND TIR STRUCTURES TO ENHANCE PATH LENGTHS IN PV DEVICES	

Commissioner for Patents
P.O. Box 1450
Alexandria, VA 22313-1450

Dear Sir:

RESPONSE TO DECISION ON PPH REQUEST

In response to the Decision on Request to Participate in PCT PPH pilot program mailed November 8, 2010, please reconsider the previously-filed Request to Participate in light of the following:

Remarks begin on page 2 of this paper.

REMARKS

On November 8, 2010, the Patent Office issued a Decision on Request to Participate in Patent Prosecution Highway (PPH). The decision dismissed the petition for failing to identify and explain why the claims are not subject to the observation in Box VIII of the PCT/ISA/237. However, the Decision indicated that the application fulfilled all other requirements for a grantable request

Applicants submit that the pending claims are not subject to the observations in Box VIII of the PCT/ISA/237. Claims 50-69 of the PCT application were indicated in the Request for Participation in the PCT-PPH Pilot Program to correspond with claims 1-20 in the U.S. Appl. No. 12/407,602. The Box VIII observations indicated that claim 61 of the PCT application does not meet the requirements of PCT Article 6 because the term "about" has an unclear meaning. However, under 35 U.S.C. §112 and U.S. case law, it is Applicants' understanding that the use of the term "about" does not per se make a claim limitation indefinite.

Hence, the Box VIII observation of the PCT/ISA/237 with regard to claim 61 is not applicable to corresponding claim 12, and claims 1-11 and 13-20 of the present application were not subject to the Box VIII observation.

Conclusions

With this filing, Applicants believe that all requirements for a petition to participate in the PPH have been satisfied. Attached is the originally filed Request for Participation in the PCT-PPH Pilot Program for the convenience of the U.S. Patent Office.

Respectfully submitted,

MARSH FISCHMANN & BREYFOGLE LLP

By: 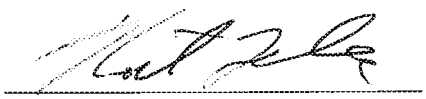

Kent A. Lembke
Registration No. 44,866
1881 9th Street, Suite 335
Boulder, Colorado 80302
(720) 562-5507

Date: 11/17/10

Doc Code: PPH.PCT.652
Document Description: Petition to make special under PCT-Patent Pros Hwy

PTO/SB/20PCT-KR (06-10)
Approved for use through 01/31/2012. OMB 0651-0058
U.S. Patent and Trademark Office; U. S. DEPARTMENT OF COMMERCE
Under the Paperwork Reduction Act of 1995, no persons are required to respond to a collection of information unless it displays a valid OMB control number.

REQUEST FOR PARTICIPATION IN THE PATENT COOPERATION TREATY - PATENT PROSECUTION HIGHWAY (PCT-PPH) PILOT PROGRAM BETWEEN THE KOREAN INTELLECTUAL PROPERTY OFFICE (KIPO) AND THE USPTO

Application No:	12/407,602	Filing date:	03/19/2009
First Named Inventor:	Mark A. Raymond		
Title of the Invention:	Computer-Implemented Method of Optimizing Refraction and TIR Structures to Enhance Path Lengths ..		

THIS REQUEST FOR PARTICIPATION IN THE PCT-PPH PILOT PROGRAM ALONG WITH THE REQUIRED DOCUMENTS MUST BE SUBMITTED VIA EFS-WEB. INFORMATION REGARDING EFS-WEB IS AVAILABLE AT HTTP://WWW.USPTO.GOV/EBC/EFS_HELP.HTML

APPLICANT HEREBY REQUESTS PARTICIPATION IN THE PCT-PPH PROGRAM AND PETITIONS TO MAKE THE ABOVE-IDENTIFIED APPLICATION SPECIAL UNDER THE PCT-PPH PROGRAM.

The above-identified application is (1) a national stage entry of the corresponding PCT application, or (2) a national stage entry of another PCT application which claims priority to the corresponding PCT application, or (3) a national application that claims domestic/ foreign priority to the corresponding PCT application, or (4) a national application which forms the basis for the priority claim in the corresponding PCT application, or (5) a continuing application of a U.S. application that satisfies one of (1) to (4) above, or (6) a U.S. application that claims domestic benefit to a U.S. provisional application which forms the basis for the priority claim in the corresponding PCT application.

The corresponding PCT application number(s) is/are: PCT/US2010/020597

The international date of the corresponding PCT application(s) is/are: 11 January 2010

I. List of Required Documents:

a. **A copy of the latest international work product (WO/ISA, WO/IPEA, or IPER) in the above-identified corresponding PCT application(s)**

☒ Is attached.

☐ Is not attached because the document is already in the U.S. application.

b. **A copy of all claims which were indicated as having novelty, inventive step and industrial applicability in the above-identified corresponding PCT application(s).**

☒ Is attached.

☐ Is not attached because the document is already in the U.S. application.

c. **English translations of the documents in a. and b. above are attached (if the documents are not in the English language). A statement that the English translation is accurate is attached for the document in b. above.**

This collection of information is required by 35 U.S.C. 119, 37 CFR 1.55, and 37 CFR 1.102(d). The information is required to obtain or retain a benefit by the public, which is to file (and by the USPTO to process) an application. Confidentiality is governed by 35 U.S.C. 122 and 37 CFR 1.11 and 1.14. This collection is estimated to take 2 hours to complete, including gathering, preparing, and submitting the completed application form to the USPTO. Time will vary depending upon the individual case. Any comments on the amount of time you require to complete this form and/or suggestions for reducing this burden should be sent to the Chief Information Officer, U.S. Patent and Trademark Office, U.S. Department of Commerce, P.O. Box 1450, Alexandria, VA 22313-1450. DO NOT SEND FEES OR COMPLETED FORMS TO THIS ADDRESS.

Approved for use through 01/31/2012. OMB 0651-0058
U.S.Patent and Trademark Office; U.S. DEPARTMENT OF COMMERCE
Under the Paperwork Reduction Act of 1995, no persons are required to respond to a collection of information unless it displays a valid OMB control number.

REQUEST FOR PARTICIPATION IN THE PCT-PPH PILOT PROGRAM BETWEEN THE KIPO AND THE USPTO

(continued)

Application No.:	
First Named Inventor:	

d. **(1) An information disclosure statement listing the documents cited in the international work products (ISR, WO/ISA, WO/IPEA, IPER) of the corresponding PCT application.**

☐ Is attached

☒ Has already been filed in the above-identified U.S. application on August 31, 2010

(2) Copies of all documents (except) for U.S. patents or U.S. patent application publications)

☐ Are attached.

Have already been filed in the above-identified U.S. application on _____

II. Claims Correspondence Table:

Claims in US Application	Patentable Claims in the corresponding PCT Application	Explanation regarding the correspondence
1-20	50-69	Identical

III. All the claims in the US application sufficiently correspond to the patentable claims in the corresponding PCT application.

Signature /Kent A. Lembke/	Date 09/14/2010
Name (Print/Typed) Kent A. Lembke	Registration Number 44,866

PATENT COOPERATION TREATY

From the INTERNATIONAL SEARCHING AUTHORITY

To:

MARSH FISCHMANN & BREYFOGLE LLP

KENT A. [illegible] Tufts Avenue, Suite 450
Denver, Colorado 80237 USA

RECEIVED
AUG 27 2010
MARSH FISCHMANN &
BREYFOGLE LLP

PCT

NOTIFICATION OF TRANSMITTAL OF THE INTERNATIONAL SEARCH REPORT AND THE WRITTEN OPINION OF THE INTERNATIONAL SEARCHING AUTHORITY, OR THE DECLARATION

(PCT Rule 44.1)

Applicant's or agent's file reference 50383-00046	FOR FURTHER ACTION See paragraphs 1 and 4 below
International application No. **PCT/US2010/020597**	International filing date *(day/month/year)* **11 JANUARY 2010 (11.01.2010)**
Applicant **GENIE LENS TECHNOLOGIES, LLC et al**	

Date of mailing *(day/month/year)* 19 AUGUST 2010 (19.08.2010)

1. ☒ The applicant is hereby notified that the international search report and the written opinion of the International Searching Authority have been established and are transmitted herewith.

   Filing of amendments and statement under Article 19:

   The applicant is entitled, if he so wishes, to amend the claims of the international application (see Rule 46):

   When? The time limit for filing such amendments is normally two months from the date of transmittal of the international search report.

   Where? Directly to the International Bureau of WIPO, 34 chemin des Colombettes 1211 Geneva 20, Switzerland, Facsimile No.: +41 22 338 82 70

   For more detailed instructions, see *PCT Applicant's Guide*, International Phase, paragraphs 9.004 . 9.011.

2. ☐ The applicant is hereby notified that no international search report will be established and that the declaration under Article 17(2)(a) to that effect and the written opinion of the International Searching Authority are transmitted herewith.

3. ☐ **With regard to any protest** against payment of (an) additional fee(s) under Rule 40.2, the applicant is notified that:

   ☐ the protest together with the decision thereon has been transmitted to the International Bureau together with any request to forward the texts of both the protest and the decision thereon to the designated Offices.

   ☐ no decision has been made yet on the protest; the applicant will be notified as soon as a decision is made.

4. **Reminders**

The applicant may submit comments on an informal basis on the written opinion of the International Searching Authority to the International Bureau. The International Bureau will send a copy of such comments to all designated Offices unless an international preliminary examination report has been or is to be established. Following the expiration of 30 months from the priority date, these comments will also be made available to the public.

Shortly after the expiration of **18 months** from the priority date, the international application will be published by the International Bureau. If the applicant wishes to avoid or postpone publication, a notice of withdrawal of the international application, or of the priority claim, must reach the International Bureau before the completion of the technical preparations for international publication (Rules 90bis.1 and 90bis.3).

Within **19 months** from the priority date, but only in respect of some designated Offices, a demand for international preliminary examination must be filed if the applicant wishes to postpone the entry into the national phase **until 30 months** from the priority date (in some Offices even later); otherwise, the applicant must, **within 20 months** from the priority date, perform the prescribed acts for entry into the national phase before those designated Offices.

In respect of other designated Offices, the time limit of **30 months** (or later) will apply even if no demand is filed within 19months.

For details about the applicable time limits, Office by Office, see www.wipo.int/pct/en/texts/time_limits.html and the PCT Applicant's Guide, National Chapters.

Name and mailing address of the ISA/KR
Korean Intellectual Property Office
Government Complex-Daejeon, 139 Seonsa-ro,
Seo-gu, Daejeon 302-701, Republic of Korea
Facsimile No. 82-42-472-7140

Authorized officer
COMMISSIONER
Telephone No. 82-42-481-8753

* Attention

Copies of the documents cited in the international search report can be searched in the following Korean Intellectual Property Office English website for three months from the date of mailing of the international search report.

http://www.kipo.go.kr/en/ => Patent Search => PCT-Service

ID : PCT international application number
PW : **O228CVMH**

Inquiries related to PCT International Search Report or Written Opinion prepared by KIPO as an International Searching Authority can be answered not only by KIPO but also through IPKC (Intellectual Property Korea Center), located in Vienna, VA, which functions as a PCT Help Desk for PCT applicants.

Homepage: http://www.ipkcenter.com
Email: ipkc@ipkcenter.com
Phone: +1 703 388 1066
Fax: +1 703 388 1084

PATENT COOPERATION TREATY

PCT

INTERNATIONAL SEARCH REPORT

(PCT Article 18 and Rules 43 and 44)

Applicant's or agent's file reference	FOR FURTHER ACTION	see Form PCT/ISA/220 as well as, where applicable, item 5 below.
50383-00046		
International application No.	International filing date *(day/month/year)*	(Earliest) Priority Date *(day/month/year)*
PCT/US2010/020597	11 JANUARY 2010 (11.01.2010)	16 JANUARY 2009 (16.01.2009)

Applicant

GENIE LENS TECHNOLOGIES, LLC et al

This International search report has been prepared by this International Searching Authority and is transmitted to the applicant according to Article 18. A copy is being transmitted to the International Bureau.

This international search report consists of a total of 3 sheets.

☐ It is also accompanied by a copy of each prior art document cited in this report.

1. **Basis of the report**
   a. With regard to the language, the international search was carried out on the basis of:
      ☒ the international application in the language in which it was filed
      ☐ a translation of the international application into _____, which is the language of a translation furnished for the purposes of international search (Rules 12.3(a) and 23.1(b))
   b. ☐ This international search report has been established taking into account the rectification of an obvious mistake authorized by or notified to this Authority under Rule 91 (Rule 43.6*bis*(a)).
   c. ☐ With regard to any nucleotide and/or amino acid sequence disclosed in the international application, see Box No. I.
2. ☐ Certain claims were found unsearchable (See Box No. II)
3. ☐ Unity of invention is lacking (See Box No. III)
4. With regard to the title,
   ☒ the text is approved as submitted by the applicant.
   ☐ the text has been established by this Authority to read as follows:
5. With regard to the abstract,
   ☒ the text is approved as submitted by the applicant.
   ☐ the text has been established, according to Rule 38.2, by this Authority as it appears in Box No. IV. The applicant may, within one month from the date of mailing of this international search report, submit comments to this Authority.
6. With regard to the drawings,
   a. the figure of the drawings to be published with the abstract is Figure No. 23
      ☒ as suggested by the applicant.
      ☐ as selected by this Authority, because the applicant failed to suggest a figure.
      ☐ as selected by this Authority, because this figure better characterizes the invention.
   b. ☐ none of the figure is to be published with the abstract.

INTERNATIONAL SEARCH REPORT

International application No.
PCT/US2010/020597

A. CLASSIFICATION OF SUBJECT MATTER

H01L 31/042(2006.01)i, F24J 2/38(2006.01)i, F24J 2/40(2006.01)i

According to International Patent Classification (IPC) or to both national classification and IPC

B. FIELDS SEARCHED

Minimum documentation searched (classification system followed by classification symbols)

H01L 31/042; G01J 1/42; H01L 31/0232; H01L 31/04

Documentation searched other than minimum documentation to the extent that such documents are included in the fields searched

Korean utility models and applications for utility models
Japanese utility models and applications for utility models

Electronic data base consulted during the international search (name of data base and, where practicable, search terms used)

eKOMPASS(KIPO internal) & Keywords: PV enhancement film, optical path, total internal reflection, light-trapping

C. DOCUMENTS CONSIDERED TO BE RELEVANT

Category*	Citation of document, with indication, where appropriate, of the relevant passages	Relevant to claim No.
X	US 4989972 A1 (DAVID M.BRAUN) 05 February 1991 See abstract, column 4 line 33 - column 5 line 39, figures 1 and 2, claims 1 and 25.	1-49,70,86-97
A	JP 2001-007371 A (NIPPON TELEGR. & TELEPH. CORP.) 12 January 2001 See abstract, paragraphs [0026]-[0038], figures 1 and 2.	1-97
A	JP 06-029562 A (SHARP CORP.) 04 February 1994 See abstract, paragraphs [0007]-[0010], claims 1-3.	1-97

☐ Further documents are listed in the continuation of Box C.

☒ See patent family annex.

* Special categories of cited documents:
"A" document defining the general state of the art which is not considered to be of particular relevance
"E" earlier application or patent but published on or after the international filing date
"L" document which may throw doubts on priority claim(s) or which is cited to establish the publication date of citation or other special reason (as specified)
"O" document referring to an oral disclosure, use, exhibition or other means
"P" document published prior to the international filing date but later than the priority date claimed

"T" later document published after the international filing date or priority date and not in conflict with the application but cited to understand the principle or theory underlying the invention
"X" document of particular relevance; the claimed invention cannot be considered novel or cannot be considered to involve an inventive step when the document is taken alone
"Y" document of particular relevance; the claimed invention cannot be considered to involve an inventive step when the document is combined with one or more other such documents,such combination being obvious to a person skilled in the art
"&" document member of the same patent family

Date of the actual completion of the international search	Date of mailing of the international search report
18 AUGUST 2010 (18.08.2010)	**19 AUGUST 2010 (19.08.2010)**

Name and mailing address of the ISA/KR	Authorized officer
Korean Intellectual Property Office Government Complex-Daejeon, 139 Seonsa-ro, Seo-gu, Daejeon 302-701, Republic of Korea Facsimile No. 82-42-472-7140	OH, Je Uk Telephone No. 82-42-481-8222

Form PCT/ISA/210 (second sheet) (July 2009)

INTERNATIONAL SEARCH REPORT

Information on patent family members

International application No.
PCT/US2010/020597

Patent document cited in search report	Publication date	Patent family member(s)	Publication date
US 4989972 A1	05.02.1991	US 5035770 A1	30.07.1991
JP 2001-007371 A	12.01.2001	None	
JP 06-029562 A	04.02.1994	JP 3238945 B2	17.12.2001

PATENT COOPERATION TREATY

From the
INTERNATIONAL SEARCHING AUTHORITY

To:
MARSH FISCHMANN & BREYFOGLE LLP

KENT A. LEMBKE 8055 East Tufts Avenue, Suite 450
Denver, Colorado 80237 USA

PCT

WRITTEN OPINION OF THE INTERNATIONAL SEARCHING AUTHORITY

(PCT Rule 43bis.1)

Date of mailing *(day/month/year)*	**19 AUGUST 2010 (19.08.2010)**
Applicant's or agent's file reference 50383-00046	**FOR FURTHER ACTION** See paragraph 2 below

International application No.	International filing date *(day/month/year)*	Priority date *(day/month/year)*
PCT/US2010/020597	**11 JANUARY 2010 (11.01.2010)**	16 JANUARY 2009 (16.01.2009)

International Patent Classification (IPC) or both national classification and IPC

H01L 31/042(2006.01)i, F24J 2/38(2006.01)i, F24J 2/40(2006.01)i

Applicant

GENIE LENS TECHNOLOGIES, LLC et al

1. This opinion contains indications relating to the following items:

- [X] Box No. I Basis of the opinion
- [ ] Box No. II Priority
- [ ] Box No. III Non-establishment of opinion with regard to novelty, inventive step and industrial applicability
- [ ] Box No. IV Lack of unity of invention
- [X] Box No. V Reasoned statement under Rule 43bis.1(a)(i) with regard to novelty, inventive step or industrial applicability; citations and explanations supporting such statement
- [ ] Box No. VI Certain documents cited
- [ ] Box No. VII Certain defects in the international application
- [X] Box No. VIII Certain observations on the international application

2. **FURTHER ACTION**

If a demand for international preliminary examination is made, this opinion will be considered to be a written opinion of the International Preliminary Examining Authority ("IPEA") except that this does not apply where the applicant chooses an Authority other than this one to be the IPEA and the chosen IPEA has notified the International Bureau under Rule 66.1bis(b) that written opinions of this International Searching Authority will not be so considered.

If this opinion is, as provided above, considered to be a written opinion of the IPEA, the applicant is invited to submit to the IPEA a written reply together, where appropriate, with amendments, before the expiration of 3 months from the date of mailing of Form PCT/ISA/220 or before the expiration of 22 months from the priority date, whichever expires later.
For further options, see Form PCT/ISA/220.

3. For further details, see notes to Form PCT/ISA/220.

Name and mailing address of the ISA/KR	Date of completion of this opinion	Authorized officer
Korean Intellectual Property Office Government Complex-Daejeon, 139 Seonsa-ro, Seo-gu, Daejeon 302 -701, Republic of Korea Facsimile No. 82-42-472-7140	18 AUGUST 2010 (18.08.2010)	OH, Je Uk Telephone No.82-42-481-8222

Form PCT/ISA/237 (cover sheet) (July 2009)

WRITTEN OPINION OF THE
INTERNATIONAL SEARCHING AUTHORITY

International application No.
PCT/US2010/020597

Box No. I Basis of this opinion

1. With regard to the language, this opinion has been established on the basis of :

☒ the international application in the language in which it was filed

☐ a translation of the international application into _____, which is the language of a translation furnished for the purposes of international search (Rules 12.3(a) and 23.1(b))

2 ☐ This opinion has been established taking into account the rectification of an obvious mistake authorized by or notified to this Authority under Rule 91 (Rule 43*bis*.1(a))

3. With regard to any nucleotide and/or amino acid sequence disclosed in the international application, this opinion has been established on the basis of:

a. a sequence listing filed or furnished
- ☐ on paper
- ☐ in electronic form

b. time of filing or furnishing
- ☐ contained in the international application as filed.
- ☐ filed together with the international application in electronic form.
- ☐ furnished subsequently to this Authority for the purposes of search.

4. ☐ In addition, in the case that more than one version or copy of a sequence listing has been filed or furnished, the required statements that the information in the subsequent or additioanl copies is identical to that in the application as filed or does not go beyond the application as filed, as appropriate, were furnished.

5. Additional comments:

WRITTEN OPINION OF THE
INTERNATIONAL SEARCHING AUTHORITY

International application No.
PCT/US2010/020597

Box No. V Reasoned statement under Rule 43bis.1(a)(i) with regard to novelty, inventive step or industrial applicability; citations and explanations supporting such statement

1. Statement

Novelty (N)	Claims	1-97	YES
	Claims	NONE	NO
Inventive step (IS)	Claims	50-69,71-85	YES
	Claims	1-49,70,86-97	NO
Industrial applicability (IA)	Claims	1-97	YES
	Claims	NONE	NO

2. Citations and explanations :

Reference is made to the following documents:

D1: US 4989972 A1 (DAVID M. BRAUN) 05 February 1991
D2: JP 2001-007371 A (NIPPON TELEGR. & TELEPH. CORP.) 12 January 2001
D3: JP 06-029562 A (SHARP CORP.) 04 February 1994

1. Novelty (PCT Article 33(2)) and Inventive Step (PCT Article 33(3))

Claims 1 to 15

Claim 1 relates to a solar cell assembly comprising a photovoltaic enhancement film having a substrate positioned proximate to the protective top of a PV device and having a plurality of absorption enhancement structures on the substrate.

D1, which is considered to be the closest prior art to the subject matter of claim 1, discloses a photovoltaic enhancement film having a substrate positioned to the protective top of a PV device and having a plurality of absorption enhancement structures on the substrate.

The subject matter of claim 1 differs from that of D1 in that claim 1 further comprises a light receiving surface to provide an average path length ratio of greater than about 1.10 in the layer of PV material over a range of incident angles. But it would have been obvious to a person skilled in the art to apply the structure in the photovoltaic enhancement film of D1, thereby arriving at the present invention of claim 1. Therefore, the subject matter of claim 1 is novel under PCT Article 33(2) but lacks an inventive step under PCT Article 33(3).

The features of claims 2 to 15, which are dependent on claim 1, are not explicitly disclosed in D1. However, they are merely matters of design option to a person skilled in the art when general knowledge in the relevant field of the art is used. Therefore, the subject matter of claims 2 to 15 is novel, but lacks an inventive step.

(Continued on Supplemental Box)

WRITTEN OPINION OF THE
INTERNATIONAL SEARCHING AUTHORITY

International application No.
PCT/US2010/020597

Box No. VIII Certain observations on the international application

The following observations on the clarity of the claims, description, and drawings or on the question whether the claims are fully supported by the description, are made:

Claims 1, 6, 7, 12, 14, 16, 18, 20, 21, 24, 26, 27, 31, 33, 38, 43, 44, 48, 49, 58, 59, 61, 71, 77, 79, 83, 85, 86, 88, 90, 91, 95, 96 and 97 do not meet the requirements of PCT Article 6 in that the term "about" has an unclear meaning.

Supplemental Box

In case the space in any of the preceding boxes is not sufficient.
Continuation of:

Box No. V

Claims 16 to 22

Claim 16 relates to a photovoltaic apparatus with enhanced absorption in a layer of PV material comprising a plurality of absorption enhancement structures.

D1, which is considered to be the closest prior art to the subject matter of claim 16, discloses a photovoltaic apparatus with enhanced absorption in a layer of PV material comprising a plurality of absorption enhancement structures.

The subject matter of claim 16 differs from that of D1 in that claim 16 further comprises the light incident upon the body over the range of incident angles having a second average path length that is at least about 10 percent greater than the first average path length. But it would have been obvious to a person skilled in the art to apply the structure in the photovoltaic enhancement structures of D1, thereby arriving at the present invention of claim 16. Therefore, the subject matter of claim 16 is novel under PCT Article 33(2) but lacks an inventive step under PCT Article 33(3).

The features of claims 17 to 22, which are dependent on claim 16, are not explicitly disclosed in D1. However, they are merely matters of design option to a person skilled in the art when general knowledge in the relevant field of the art is used. Therefore, the subject matter of claims 17 to 22 is novel, but lacks an inventive step.

Claims 23 to 27

Claim 23 relates to a solar array comprising a PV enhancement film having a substrate and a second surface comprising a plurality of absorption enhancement structures.

D1, which is considered to be the closest prior art to the subject matter of claim 23, discloses a photovoltaic device with enhanced absorption in a layer of PV material comprising a plurality of absorption enhancement structures.

The subject matter of claim 23 differs from that of D1 in that claim 23 further comprises a path length in PV material of the solar cells being greater than a base path length. But it would have been obvious to a person skilled in the art to apply the structure in the photovoltaic enhancement structures of D1, thereby arriving at the present invention of claim 23. Therefore, the subject matter of claim 23 is novel under PCT Article 33(2) but lacks an inventive step under PCT Article 33(3).

The features of claims 24 to 27, which are dependent on claim 23, are not explicitly disclosed in D1. However, they are merely matters of design option to a person skilled in the art when general knowledge in the relevant field of the art is used. Therefore, the subject matter of claims 24 to 27 is novel, but lacks an inventive step.

Claims 28 to 38

The features of claim 28 are substantially the same as those of claim 1 except that claim 28 more includes a plurality of TIR elements on the substrate. However, this additional feature of claim 28 is merely a matter of design option to a person skilled in the art. Accordingly, the subject matter of claim 28 is novel under PCT Article 33(2) but lacks an inventive step under PCT Article 33(3).

(Continued on next page)

Supplemental Box

In case the space in any of the preceding boxes is not sufficient.
Continuation of:

(Previous page)

The features of claims 29 to 38, which are dependent on claim 28, are not explicitly disclosed in D1. However, they are merely matters of design option to a person skilled in the art when general knowledge in the relevant field of the art is used. Therefore, the subject matter of claims 29 to 38 is novel, but lacks an inventive step.

Claims 39 to 45

The features of claim 39 are substantially the same as those of claim 16 except that claim 39 more includes a plurality of TIR elements on the substrate. However, this additional feature of claim 39 is merely a matter of design option to a person skilled in the art. Accordingly, the subject matter of claim 39 is novel under PCT Article 33(2) but lacks an inventive step under PCT Article 33(3).

The features of claims 40 to 45, which refer to claim 39, are not explicitly disclosed in D1. However, they are merely matters of design option to a person skilled in the art when general knowledge in the relevant field of the art is used. Therefore, the subject matter of claims 40 to 45 is novel, but lacks an inventive step.

Claims 46 to 49

The features of claim 46 are substantially the same as those of claim 23 except that claim 46 more includes a plurality of light-trapping structures on the substrate. However, this additional feature of claim 46 is merely a matter of design option to a person skilled in the art. Accordingly, the subject matter of claim 46 is novel under PCT Article 33(2) but lacks an inventive step under PCT Article 33(3).

The features of claims 47 to 49, which refer to claim 46, are not explicitly disclosed in D1. However, they are merely matters of design option to a person skilled in the art when general knowledge in the relevant field of the art is used. Therefore, the subject matter of claims 47 to 49 is novel, but lacks an inventive step.

Claims 50-64 and 71-85

The subject matter of claim 50 differs from these prior art documents in that claim 50 describes the step of determining a set of base path lengths in the PV material layer based on the first ray tracing, and the step of determining a set of enhanced path lengths in the PV material layer based on the second ray tracing. And it is not obvious to a person skilled in the art over the documents individually or in combination. Therefore, the subject matter of claim 50 meets the requirements of PCT Article 33(2) and (3) with respect to novelty and inventive step.

Claims 51 to 64 and claims 71 to 85 are dependent on claim 50 and therefore meet the requirements of PCT Article 33(2) and (3).

(Continued on next page)

Supplemental Box

In case the space in any of the preceding boxes is not sufficient.
Continuation of :

(Previous page)

Claims 65 to 69

The subject matter of claim 65 differs from these prior art documents in that claim 65 describes a path length ratio determination module run by the processor to determine average path length ratios comparing the path lengths associated with each of the absorption enhancement structures with the base path lengths, and an optimization module run by the processor selecting one of absorption enhancement structures based on the determined average path length ratios for the range of incidence angles. And it is not obvious to a person skilled in the art over the documents individually or in combination. Therefore, the subject matter of claim 65 meets the requirements of PCT Article 33(2) and (3) with respect to novelty and inventive step.

The subject matter of claim 66 differs from these prior art documents in that claim 66 describes a ray tracing engine performing a first ray tracing over a range of incidence angles for the PV device, determining a set of base path lengths in the PV material layer based on the first ray tracing, performing a second ray tracing over the range of incidence angles for the PV device modified to include the PV enhancement film. And it is not obvious to a person skilled in the art over the documents individually or in combination. Therefore, the subject matter of claim 66 meets the requirements of PCT Article 33(2) and (3) with respect to novelty and inventive step.

Claims 67 to 69 are dependent on claim 66 and therefore meet the requirements of PCT Article 33(2) and (3).

Claims 70 and 86-93

Claim 70 relates to a method of manufacturing a photovoltaic enhancement film comprising rolling the embossing roller against a first side of the web to form the plurality of absorption enhancement structures.

D1, which is considered to be the closest prior art to the subject matter of claim 70, discloses a photovoltaic apparatus with enhanced absorption in a layer of PV material comprising a plurality of absorption enhancement structures.

The subject matter of claim 70 differs from that of D1 in that claim 70 further comprises feeding a web of transparent material at an extrusion temperature to the extrusion device. But it would have been obvious to a person skilled in the art when general knowledge in the relevant field of the art is used. Therefore, the subject matter of claim 70 is novel under PCT Article 33(2) but lacks an inventive step under PCT Article 33(3).

The technical features of method claim 86 essentially correspond to those of apparatus claim 16, except in the category. The same reasoning applies to claim 86. Therefore, the subject matter of claim 86 is novel, but lacks an inventive step.

The features of claims 87 to 93, which refer to claim 86, are not explicitly disclosed in D1. However, they are merely matters of design option to a person skilled in the art when general knowledge in the relevant field of the art is used. Therefore, the subject matter of claims 87 to 93 is novel, but lacks an inventive step.

(Continued on the next page)

Supplemental Box

In case the space in any of the preceding boxes is not sufficient.
Continuation of:

(The previous page)

Claims 94 to 97

The technical features of method claim 94 essentially correspond to those of apparatus claim 23, except in the category. The same reasoning applies to claim 94. Therefore, the subject matter of claim 94 is novel, but lacks an inventive step.

The features of claims 95 to 97, which refer to claim 94, are not explicitly disclosed in D1. However, they are merely matters of design option to a person skilled in the art when general knowledge in the relevant field of the art is used. Therefore, the subject matter of claims 95 to 97 is novel, but lacks an inventive step.

2. Industrial Applicability (PCT Article 33(4))

Claims 1 to 97 meet the criteria set out in PCT Article 33(4), and thus have industrial applicability because the subject matter claimed can be made or used in industry.

50. A computer-implemented method for optimizing configuration of absorption enhancement structures of a photovoltaic (PV) enhancement film for use in with a PV device to improved efficiency of capturing solar energy with the PV device, comprising:

with an optimization module run by one or more processors of a computer system, receiving optimization run input defining a PV enhancement film including a set of absorption enhancement structures with differing configurations;

modeling a PV device including a layer of PV material;

with a ray tracing engine run by the one or more processors of the computer system, performing a first ray tracing over a range of incidence angles for the PV device;

determining a set of base path lengths in the PV material layer based on the first ray tracing;

with the ray tracing engine, performing a second ray tracing over the range of incidence angles for the PV device modified to include the PV enhancement film comprising a plurality of one of the absorption enhancement structures according to one of the configurations;

determining a set of enhanced path lengths in the PV material layer based on the second ray tracing; and

with the optimization module, determining a set of path length ratios by comparing the enhanced path lengths to the base path lengths.

51. The method of claim 50, further comprising comparing the path length ratios with a stored set of path length ratios and based on the comparing storing design parameters for the one of the absorption enhancement structures as optimized structure parameters for the PV enhancement film.

52. The method of claim 51, further comprising determining whether an additional one of the configurations remains for processing and when an additional one is determined to be remaining, repeating the performing the second ray tracing using the absorption enhancement structures of the additional one of the configurations, the determining of the set of enhanced path lengths, the determining of the set of path length ratios, the comparing, and the storing.

53. The method of claim 51, further comprising outputting the optimized structure parameters and a portion of the optimization run input defining the PV enhancement film to memory of a film fabrication device and operating the film fabrication device to produce a plurality of PV enhancement films for use with PV devices.

54. The method of claim 51, further comprising identifying a subset of the range of incidence angles associated with lower ones of the path length ratios and repeating the performing of the second ray tracing over the subset of the range of incidence angles, the determining of the set of enhanced path lengths, the determining of the set of path length ratios, the comparing to establish a second set of optimized structure parameters, and the storing until there are no additional ones of the configurations remaining for processing.

55. The method of claim 54, further comprising defining a set of the absorption enhancement structures that includes a set of first structures defined by the optimized structure parameters and a set of second structures defined by the second set of optimized structure parameters and storing in memory an optimized design for a PV enhancement film that includes a mixed pattern of the first and second structures.

56. The method of claim 50, wherein the range of incidence angles is a range of angles selected from the range of negative 80 degrees to positive 80 degrees as measured from an orthogonal plane passing through a light-receiving surface of the PV material.

57. The method of claim 56, wherein the range of incidence angles is a range of angles selected from the range of negative 20 degrees to positive 20 degrees as measured from an orthogonal plane passing through a light-receiving surface of the PV material.

58. The method of claim 56, wherein the absorption enhancement structures are configured such that an average of the determined path length ratios is greater than about 1.20 in the layer of PV material over the range of incidence angles.

59. The method of claim 58, wherein the absorption enhancement structures are configured such that the average path length ratio is greater than about 1.50 in the layer of PV material over the range of incidence angles.

60. The method of claim 50, wherein each of the absorption enhancement structures has a body with a pyramid or a frustoconical shape with a base supported on the substrate.

61. The method of claim 50, wherein each of the absorption enhancement structures has a base and a height less than about 10 mils in magnitude.

62. The method of claim 50, wherein each of the absorption enhancement structures comprises an elongated body extending along the length of the substrate and having at least two sides angled inward.

63. The method of claim 50, wherein the differing configurations define for each of the absorption enhancement structures a cross sectional shape and size and wherein the optimization run input further comprises an index of refraction for the PV enhancement film.

64. The method of claim 63, wherein the modeled PV device includes a glass cover layer with an associated index of refraction and thickness for use in the performing of the first and second ray tracings and wherein the optimization run input comprises a thickness for an adhesive layer between the glass cover layer and the PV enhancement film and an index of refraction for the adhesive layer for use in the performing of the first and second ray tracings.

65. A computer system for use in fabricating a photovoltaic (PV) enhancement film for increasing path lengths in a layer of PV material of a PV device, comprising:

a processor for running programs defined by computer code;

memory storing a set of optimization input parameters defining a plurality of absorption enhancement structures and parameters defining the PV device including the layer of PV material;

a ray tracing module run by the processor to perform ray tracings for the PV device to define base path lengths through the layer of PV material for light at a plurality of incidence angles and to perform separate ray tracings for the PV device including a PV enhancement film with each of the absorption enhancement structures, whereby path lengths

are defined through the PV material for the plurality of incidence angles for each of the absorption enhancement structures;

a path length ratio determination module run by the processor to determine average path length ratios comparing the path lengths associated with each of the absorption enhancement structures with the base path lengths; and

an optimization module run by the processor selecting one of absorption enhancement structures based on the determined average path length ratios for the range of incidence angles and storing the optimization input parameters associated with the selected one as optimized structure parameters for the PV enhancement film and the PV device.

66. A computer system for optimizing a PV enhancement film for use with a PV device, comprising:

an optimization run input component that provides optimization run input defining a PV enhancement film including defining parameters for a plurality of differing absorption enhancement structures;

a ray tracing engine performing a first ray tracing over a range of incidence angles for the PV device, determining a set of base path lengths in the PV material layer based on the first ray tracing, performing a second ray tracing over the range of incidence angles for the PV device modified to include the PV enhancement film comprising a plurality of the absorption enhancement structures according to one set of the defining parameters, and determining a set of enhanced path lengths in the PV material layer based on the second ray tracing; and

an structure optimization component determining a set of path length ratios by comparing the enhanced path lengths to the base path lengths and comparing the path length ratios with a stored set of path length ratios, and based on the comparing storing design parameters for the one of the absorption enhancement structures as optimized structure parameters for the PV enhancement film.

67. The system of claim 66, wherein the structure optimization component further determines whether an additional set of the defining parameters remains for processing and when another is determined to be remaining, repeating the performing of the second ray

tracing using the absorption enhancement structures of the additional set of the defining parameters, the determining of the set of enhanced path lengths, the determining of the set of path length ratios, the comparing, and the storing.

68. The system of claim 66, wherein the structure optimization component further identifies a subset of the range of incidence angles associated with lower ones of the path length ratios and repeats the performing of the second ray tracing over the subset of the range of incidence angles, the determining of the set of enhanced path lengths, the determining of the set of path length ratios, the comparing to establish a second set of optimized structure parameters, and the storing until there are not additional ones of the configurations remaining for processing.

69. The system of claim 68, further comprising defining a set of the absorption enhancement structures that includes a set of first structures defined by the optimized structure parameters and a set of second structures defined by the second set of optimized structure parameters and storing in memory an optimized design for a PV enhancement film that includes a mixed pattern of the first and second structures.

70. A method of manufacturing a photovoltaic (PV) enhancement film, comprising:

providing an extrusion device comprising an embossing roller with a surface engraved with a contoured pattern corresponding to a plurality of absorption enhancement structures;

feeding a web of substantially transparent material at an extrusion temperature to the extrusion device; and

rolling the embossing roller against a first side of the web to form the plurality of absorption enhancement structures, wherein the absorption enhancement structures each comprise a light receiving surface that directs at least a portion of light that passes through a second side of the web toward the first side back toward the second side.

71. The method of claim 50, wherein the light receiving surface refracts incident light striking the first side to provide an average path length ratio of greater than about 1.10

when the embossed web is applied over a layer of PV material over a range of incidence angles.

72. The method of claim 51, wherein the average path length ratio is determined as an average of a plurality of path length ratios determined within the range of incidence angles and each of the path length ratios being a path length of the refracted incident light traveling through the PV material after passing through the PV enhancement film compared with a path length of the incident light traveling through the PV material in an absence of the PV enhancement film.

73. The method of claim 52, wherein the plurality of path length ratios is determined based on ray tracings performed at a plurality of angles within the range of incidence angles.

74. The method of claim 53, wherein the range of incidence angles is a range of angles selected from the range of negative 80 degrees to positive 80 degrees as measured from an orthogonal plane passing through a light-receiving surface of the PV material.

75. The method of claim 53, wherein the range of incidence angles is a range of angles selected from the range of negative 20 degrees to positive 20 degrees as measured from an orthogonal plane passing through a light-receiving surface of the PV material.

76. The method of claim 50, wherein each of the absorption enhancement structures comprises an elongated body including at least two sides angled inward.

77. The method of claim 76, wherein each of the absorption enhancement structures has a triangular cross section when taken along a plane passing orthogonal to a longitudinal axis and wherein the sides are angled inward at angles of less than about 60 degrees.

78. The method of claim 76, wherein adjacent ones of the absorption enhancement structures have differing heights as measured from the second side to a peak of the triangular cross section of the absorption enhancement structures.

79. The method of claim 76, wherein each of the absorption enhancement structures comprises three interconnected sides including two sides angled inward at angles of less than about 60 degrees and an upper planar side disposed between the two angled sides that is substantially parallel to the light-receiving surface.

80. The method of claim 50, wherein each of the absorption enhancement structures comprises an elongated body including a semi-circular cross section.

81. The method of claim 50, wherein each of the absorption enhancement structures has a body with a hemispherical shape with a base supported on the substrate.

82. The method of claim 50, wherein each of the absorption enhancement structures has a body with a pyramid or a frustoconical shape with a base supported on the substrate.

83. The method of claim 50, wherein each of the absorption enhancement structures has a base and a height less than about 10 mils in magnitude.

84. The method of claim 50, further comprising cooling the embossed web, applying an adhesive to the second side, and cutting the embossed web into a plurality of PV enhancement films each with a predefined length and width.

85. The method of claim 50, wherein the web material comprises polycarbonate or acrylic, wherein the embossed web has a thickness of less than about 30 mils, wherein the extrusion temperature is at least about 300 °F, and wherein the embossing roller is chilled to a temperature below ambient.

86. A method of fabricating a photovoltaic apparatus with enhanced energy absorption, comprising:

providing a layer of photovoltaic (PV) material that is positioned under a protective layer of substantially transparent material, wherein incident light striking the protective layer over a range of incidence angles has a first average path length through the PV material;

UNITED STATES PATENT AND TRADEMARK OFFICE

UNITED STATES DEPARTMENT OF COMMERCE
United States Patent and Trademark Office
Address: COMMISSIONER FOR PATENTS
P.O. Box 1450
Alexandria, Virginia 22313-1450
www.uspto.gov

APPLICATION NO.	FILING DATE	FIRST NAMED INVENTOR	ATTORNEY DOCKET NO.	CONFIRMATION NO.
12/407,602	03/19/2009	Mark A. Raymond	50383-00041	7658

25231 7590 12/14/2010

MARSH, FISCHMANN & BREYFOGLE LLP
8055 East Tufts Avenue
Suite 450
Denver, CO 80237

EXAMINER	
CHIANG, JACK	

ART UNIT	PAPER NUMBER
2825	

MAIL DATE	DELIVERY MODE
12/14/2010	PAPER

Please find below and/or attached an Office communication concerning this application or proceeding.

The time period for reply, if any, is set in the attached communication.

UNITED STATES PATENT AND TRADEMARK OFFICE

Commissioner for Patents
United States Patent and Trademark Office
P.O. Box 1450
Alexandria, VA 22313-1450
www.uspto.gov

MARSH, FISCHMANN & BREYFOGLE LLP
8055 East Tufts Avenue
Suite 450
Denver CO 80237

In re Application of
RAYMOND et al.
Application No.: 12/407,602
Filed: 19 March 2009
Attorney Docket No.: 50383-00041
For: COMPUTER-IMPLEMENTED METHOD OF OPTIMIZING REFRACTION AND TIR STRUCTURES TO ENHANCE PATH LENGTHS IN PV DEVICES

: DECISION ON REQUEST TO
: PARTICIPATE IN THE PCT PATENT
: PROSECUTION HIGHWAY PILOT
: PROGRAM AND PETITION
: TO MAKE SPECIAL UNDER
: 37 CFR 1.102(a)

This is a decision on the request to participate in the PCT Patent Prosecution Highway (PCT-PPH) pilot program and the petition under 37 CFR 1.102(a), filed 14 September 2010 and renewed on 17 November 2010, to make the above-identified application special.

The request and petition are **GRANTED**.

Discussion

A grantable request to participate in the PCT-PPH pilot program and petition to make special require:

(1) The U.S. application must disclose an eligible relationship to one or more PCT applications where the ISA or IPEA are the JPO, EPO, KIPO, or USPTO;

(2) At least one claim in the PCT application has novelty, inventive step, and industrial applicability and must be free of any observations in Box VIII in the latest work product in the international stage or applicant must identify and explain why the claim(s) is/are not subject to the observation in Box VIII;

(3) Applicant must submit a copy of the claim(s) from the PCT application(s) that have novelty, inventive step, and industrial applicability along with an English translation thereof and a statement that the English translation is accurate, if the claims are not in the English language;

(4) All the claims in the U.S. application must sufficiently correspond or be amended to sufficiently correspond to the claim(s) that have novelty, inventive step, and industrial applicability in the PCT application(s);

(5) Examination of the U.S. application has not begun;

(6) Applicant must submit a copy of the latest international work product from the PCT application indicating that the claim(s) have novelty, inventive step, and industrial applicability along with an English translation thereof and a statement that the English translation is accurate if the latest international work product is not in the English language;

(7) Applicant must submit an IDS listing the documents cited by the PCT examiner in the international work product along with copies of documents except U.S. patents or U.S. patent application publications.

The request to participate in the PCT-PPH pilot program and petition comply with the above requirements. Accordingly, the above-identified application has been accorded "special" status.

Telephone inquiries concerning this decision should be directed to Lee W. Young at 571-272-4549.

All other inquiries concerning the examination or status of the application is accessible in the PAIR system at http://www.uspto.gov/ebc.index.html.

This application will be forwarded to the examiner for action on the merits commensurate with this decision once this application's formality reviews have been completed.

Lee W. Young
TQAS Technology Center 2800 - Semiconductors,
Electrical & Optical Systems & Components

SPE RESPONSE FOR CERTIFICATE OF CORRECTION

DATE : August 26, 2011

TO SPE OF : ART UNIT 2855

SUBJECT : Request for Certificate of Correction for Appl. No.: 12407632 Patent No.: 7937998

CofC mailroom date: Aug. 15, 2011

Please respond to this request for a certificate of correction within 7 days.

FOR IFW FILES:

Please review the requested changes/corrections as shown in the **COCIN** document(s) in the IFW application image. No new matter should be introduced, nor should the scope or meaning of the claims be changed.

Please complete the response (see below) and forward the completed response to scanning using document code **COCX**.

FOR PAPER FILES:

Please review the requested changes/corrections as shown in the attached certificate of correction. Please complete this form (see below) and forward it with the file to:

Certificates of Correction Branch (CofC)
Randolph Square – 9D10-A
Palm Location 7580

Note: _____

_____

_____

Certificates of Correction Branch

703-756-1814 _____

Thank You For Your Assistance

The request for issuing the above-identified correction(s) is hereby:
Note your decision on the appropriate box.

- ☒ **Approved** — **All** changes apply.
- ☐ **Approved in Part** — Specify below which changes **do not** apply.
- ☐ **Denied** — State the reasons for denial below.

Comments: _____

_____

_____

_____

_____

Li Smith, SPE 2855 AU

UNITED STATES PATENT AND TRADEMARK OFFICE

Commissioner for Patents
United States Patent and Trademark Office
P.O. Box 1450
Alexandria, VA 22313-1450
www.uspto.gov

JONES DAY
222 EAST 41ST ST
NEW YORK NY 10017

MAILED

FEB 28 2011

OFFICE OF PETITIONS

In re Application of :
Rick Lifsitz et al. :
Application No. 12/407,633 : DECISION ON PETITION
Filed: March 19, 2009 :
Attorney Docket No. 8118.027 US :

This is a decision on the petition under the unintentional provisions of 37 CFR 1.137(b), filed December 27, 2010, to revive the above-identified application.

The petition is **GRANTED**.

The application became abandoned for failure to reply in a timely manner to the Notice to File Missing Parts of Non-Provisional Application (Notice), mailed April 2, 2009. The Notice set a period for reply of two (2) months from the mail date of the Notice. No extensions of time under the provisions of 37 CFR 1.136(a) was obtained. Accordingly, the application became abandoned on June 3, 2009. A Notice of Abandonment was mailed March 31, 2010.

The petition satisfies the requirements of 37 CFR 1.137(b) in that petitioner has supplied (1) the reply in the form of replacement drawings, (2) the petition fee of $810, and (3) a proper statement of unintentional delay. Accordingly the replacement drawings are accepted as being unintentionally delayed.

It is not apparent whether the person signing the statement of unintentional delay was in a position to have firsthand or direct knowledge of the facts and circumstances of the delay at issue. Nevertheless, such statement is being treated as having been made as the result of a reasonable inquiry into the facts and circumstances of such delay. See 37 CFR 10.18(b) and Changes to Patent Practice and Procedure; Final Rule Notice, 62 Fed. Reg. 53131, 53178 (October 10, 1997), 1203 Off. Gaz. Pat. Office 63, 103 (October 21, 1997). In the event that such an inquiry has not been made, petitioner must make such an inquiry. If such inquiry results in the discovery that it is not correct that the entire delay in filing the required reply from the due date for the reply until the filing of a grantable petition pursuant to 37 CFR 1.137(b) was unintentional, petitioner must notify the Office.

37 CFR 1.137(b)(3) requires a statement that "the entire delay in filing the required reply from the due date for the reply until the filing of a grantable petition pursuant to 37 CFR 1.137(b) was unintentional." Since the statement appearing in the petition varies from the language required by 37 CFR 1.137(b)(3), the statement is being construed as the required statement. Petitioner must notify the Office if this is **not** a correct reading of the statement appearing in the petition.

Telephone inquiries regarding this decision should be directed to the Kimberly Inabinet at (571) 272-4618.

This application is being referred to the Office of Patent Application Processing for appropriate action in the normal course of business on the reply received December 27, 2010. Inquires regarding the status of the application should be directed to 571-272-4000.

/Kimberly Inabinet/

Kimberly Inabinet
Petitions Examiner
Office of Petitions

UNITED STATES PATENT AND TRADEMARK OFFICE

Commissioner for Patents
United States Patent and Trademark Office
P.O. Box 1450
Alexandria, VA 22313-1450
www.uspto.gov

FOX ROTHSCHILD, LLP
ELAN PHARMA INTERNATIONAL LIMITED
997 LENOX DRIVE, BLDG. #3
LAWRENCEVILLE, NJ 08648

MAILED

AUG 02 2011

OFFICE OF PETITIONS

In re Application of :
Liversidge et al. :
Application No. 12/407,684 : DECISION ON PETITION
Filed: March 19, 2009 : UNDER 37 CFR 1.78(a)(3)
Attorney Docket No. 34074.00989 (05.0166) : UNDER 37 CFR 1.78(a)(6)

This is a decision on the petitions under 37 CFR §§ 1.78(a)(3) and 1.78(a)(6), filed July 5, 2011, to accept an unintentionally delayed claims under 35 U.S.C. §§120 and 119(e) for the benefit of the prior-filed applications set forth in the concurrently filed amendment.

The petition is **DISMISSED**.

A petition for acceptance of a claim for late priority under 37 CFR §§ 1.78(a)(3) and 1.78(a)(6) is only applicable to those applications filed on or after November 29, 2000. Further, the petition is appropriate only after the expiration of the period specified in 37 CFR §§ 1.78(a)(2)(ii) and 1.78(a)(5)(ii). In addition, the petition under 37 CFR §§ 1.78(a)(3) and 1.78(a)(6) must be accompanied by:

(1) the reference required by 35 U.S.C. §§ 120 and 119(e) and 37 CFR §§ 1.78(a)(2)(i) and 1.78(a)(5)(i) of the prior-filed application, unless previously submitted;
(2) the surcharge set forth in § 1.17(t); and
(3) a statement that the entire delay between the date the claim was due under 37 CFR §§ 1.78(a)(2)(ii) and 1.78(a)(5)(ii) and the date the claim was filed was unintentional. The Commissioner may require additional where there is a question whether the delay was unintentional.

The instant nonprovisional application was filed on March 19, 2009 and was pending at the time of filing of the instant petition. A reference to the prior-filed applications has been included in an amendment to the first sentence of the specification following the title, as required by 37 CFR §§ 1.78(a)(2)(iii) and 1.78(a)(5)(iii).

However, the amendment is not acceptable as drafted since it improperly incorporates by reference the prior-filed application. Petitioner's attention is directed to Dart Industries v. Banner, 636 F.2d 684, 207 USPQ 273 (C.A.D.C. 1980), where the court drew a distinction between a permissible 35 U.S.C. § 120 statement and the impermissible introduction of new matter by way of incorporation by reference in a 35 U.S.C. § 120 statement. The court specifically stated:

> Section 120 merely provides a mechanism whereby an application becomes entitled to benefit of the filing date of an earlier application disclosing the same subject matter. Common subject matter must be disclosed, in both applications, either specifically or by an express incorporation-by-reference of prior disclosed subject matter. Nothing in section 120 itself operates to carry forward any disclosure from an earlier application. In re deSeversky, supra at 674, 177 USPQ at 146-147. Section 120 contains no magical disclosure-augmenting powers able to pierce new matter barriers. It cannot, therefore, "limit" the absolute and express prohibition against new matter contained in section 251.

In order for the incorporation by reference statement to be effective as a proper safeguard against the omission of a portion of a prior application, the incorporation by reference statement must be included in the specification-as-filed, or in an amendment specifically referred to in an oath or declaration executing the application. *See* In re deSeversky, *supra*. *Note also* MPEP 201.06(c).

Accordingly, before the petition under 37 CFR 1.78(a) (3) and 1.78(a)(6) can be granted, a substitute amendment[1] deleting the incorporation by reference statement, along with a renewed petition under 37 CFR 1.78(a)(6), is required.

Further correspondence with respect to this matter should be addressed as follows:

By mail:	Mail Stop PETITIONS Commissioner for Patents Post Office Box 1450 Alexandria, VA 22313-1450
By hand:	Customer Window located at: U.S. Patent and Trademark Office Customer Service Window Randolph Building 401 Dulany Street Alexandria, VA 22314
By fax:	(571) 273-8300 ATTN: Office of Petitions
By Internet:	EFS-Web

Any questions concerning this matter may be directed to Alicia Kelley-Collier at (571) 272-6059.

/Carl Friedman/
Carl Friedman
Petitions Examiner
Office of Petitions

---

[1] *Note* 37 CFR 1.121

UNITED STATES PATENT AND TRADEMARK OFFICE

Commissioner for Patents
United States Patent and Trademark Office
P.O. Box 1450
Alexandria, VA 22313-1450
www.uspto.gov

MAILED
SEP 29 2011
OFFICE OF PETITIONS

FOX ROTHSCHILD LLP
ELAN PHARMA INTERNATIONAL LIMITED
997 LENOX DRIVE, BLDG. #3
LAWRENCEVILLE, NJ 08648

In re Application of :
Gray Liversidge et al :
Application No. 12/407,684 : DECISION ON PETITIONS
Filed: March 19, 2009 : UNDER 37 CFR 1.78(a)(3) AND (a)(6)
Attorney Docket No. 34074.00989 (05.0166) :

This is a decision on the renewed petitions under 37 CFR §§ 1.78(a)(3) and 1.78(a)(6), filed September 1, 2011, to accept an unintentionally delayed claim under 35 U.S.C. §§120 and 119(e) for the benefit of the prior-filed applications set forth in the concurrently filed amendment.

The petitions are **GRANTED.**

A petition for acceptance of a claim for late priority under 37 CFR §§ 1.78(a)(3) and 1.78(a)(6) is only applicable to those applications filed on or after November 29, 2000. Further, the petition is appropriate only after the expiration of the period specified in 37 CFR §§ 1.78(a)(2)(ii) and 1.78(a)(5)(ii). In addition, the petition under 37 CFR §§ 1.78(a)(3) and 1.78(a)(6) must be accompanied by:

(1) the reference required by 35 U.S.C. §§ 120 and 119(e) and 37 CFR §§ 1.78(a)(2)(i) and 1.78(a)(5)(i) of the prior-filed application, unless previously submitted;
(2) the surcharge set forth in § 1.17(t); and
(3) a statement that the entire delay between the date the claim was due under 37 CFR §§ 1.78(a)(2)(ii) and 1.78(a)(5)(ii) and the date the claim was filed was unintentional. The Director may require additional information where there is a question whether the delay was unintentional.

Additionally, the instant nonprovisional application must be pending at the time of filing of the reference to the prior-filed provisional application as required by 37 CFR 1.78(a)(5)(ii). Further, the nonprovisional application claiming the benefit of the prior-filed provisional application must have been filed within twelve months of the filing date of the prior-filed provisional application. All the above requirements having been satisfied, the late claim for benefit of priority under 35 U.S.C. §§ 120 and 119(e) is accepted as being unintentionally delayed.

The granting of the petition to accept the delayed benefit claim to the prior-filed applications under 37 CFR §§ 1.78(a)(3) and 1.78(a)(6) should not be construed as meaning that this application is entitled to the benefit of the filing date of the prior-filed applications. In order for this application to be entitled to the benefit of the prior-filed applications, all other requirements under 35 U.S.C. §§120 and 1.78(a)(1) and (a)(2) and under 35 U.S.C. §119(e) and 37 CFR 1.78(a)(4) and (a)(5) must be met. Similarly, the fact that the corrected Filing Receipt accompanying this decision on petition includes the prior-filed applications should not be construed as meaning that applicant is entitled to the claim for benefit of priority to the prior-filed applications noted thereon. Accordingly, the examiner will, in due course, consider this benefit claim and determine whether the application is entitled to the benefit of the earlier filing date.

A corrected Filing Receipt, which includes the priority claim to the prior-filed applications, accompanies this decision on petition.

Any questions concerning this matter may be directed to Irvin Dingle at (571) 272-3210. All other inquiries concerning either the examination procedures or status of the application should be directed to the Technology Center.

This matter is being referred to Technology Center Art Unit 1612 for consideration by the examiner of the claim under 35 U.S.C. § §120 and 119(e) of the prior-filed nonprovisional and provisional applications.

David Bucci
Petition Examiner
Office of Petitions

ATTACHMENT : Corrected Filing Receipt

UNITED STATES PATENT AND TRADEMARK OFFICE

UNITED STATES DEPARTMENT OF COMMERCE
United States Patent and Trademark Office
Address: COMMISSIONER FOR PATENTS
P.O. Box 1450
Alexandria, Virginia 22313-1450
www.uspto.gov

APPLICATION NUMBER	FILING or 371(c) DATE	GRP ART UNIT	FIL FEE REC'D	ATTY.DOCKET.NO	TOT CLAIMS	IND CLAIMS
12/407,684	03/19/2009	1612	1220	34074.00989 (05.0166)	20	1

CONFIRMATION NO. 7802

CORRECTED FILING RECEIPT

61214
Fox Rothschild, LLP
Elan Pharma International Limited
997 Lenox Drive, Bldg. #3
Lawrenceville, NJ 08648

OC00000050074268

Date Mailed: 09/28/2011

Receipt is acknowledged of this non-provisional patent application. The application will be taken up for examination in due course. Applicant will be notified as to the results of the examination. Any correspondence concerning the application must include the following identification information: the U.S. APPLICATION NUMBER, FILING DATE, NAME OF APPLICANT, and TITLE OF INVENTION. Fees transmitted by check or draft are subject to collection. Please verify the accuracy of the data presented on this receipt. **If an error is noted on this Filing Receipt, please submit a written request for a Filing Receipt Correction. Please provide a copy of this Filing Receipt with the changes noted thereon. If you received a "Notice to File Missing Parts" for this application, please submit any corrections to this Filing Receipt with your reply to the Notice. When the USPTO processes the reply to the Notice, the USPTO will generate another Filing Receipt incorporating the requested corrections**

Applicant(s)

Gary Liversidge, West Chester, PA;
Scott Jenkins, Downingtown, PA;

Assignment For Published Patent Application

ELAN PHARMA INTERNATIONAL LIMITED, County Westmeath, IRELAND

Power of Attorney: The patent practitioners associated with Customer Number 61214

Domestic Priority data as claimed by applicant

This application is a CIP of 12/071,849 02/27/2008
which is a CON of 11/300,592 12/15/2005 ABN
which claims benefit of 60/731,869 11/01/2005
and claims benefit of 60/636,817 12/15/2004

Foreign Applications (You may be eligible to benefit from the **Patent Prosecution Highway** program at the USPTO. Please see http://www.uspto.gov for more information.)

If Required, Foreign Filing License Granted: 03/30/2009

The country code and number of your priority application, to be used for filing abroad under the Paris Convention, is **US 12/407,684**

Projected Publication Date: Not Applicable

Non-Publication Request: No

Early Publication Request: No

Title

COMPOSITIONS FOR SITE-SPECIFIC DELIVERY OF IMATINIB AND METHODS OF USE

Preliminary Class

424

PROTECTING YOUR INVENTION OUTSIDE THE UNITED STATES

Since the rights granted by a U.S. patent extend only throughout the territory of the United States and have no effect in a foreign country, an inventor who wishes patent protection in another country must apply for a patent in a specific country or in regional patent offices. Applicants may wish to consider the filing of an international application under the Patent Cooperation Treaty (PCT). An international (PCT) application generally has the same effect as a regular national patent application in each PCT-member country. The PCT process **simplifies** the filing of patent applications on the same invention in member countries, but **does not result** in a grant of "an international patent" and does not eliminate the need of applicants to file additional documents and fees in countries where patent protection is desired.

Almost every country has its own patent law, and a person desiring a patent in a particular country must make an application for patent in that country in accordance with its particular laws. Since the laws of many countries differ in various respects from the patent law of the United States, applicants are advised to seek guidance from specific foreign countries to ensure that patent rights are not lost prematurely.

Applicants also are advised that in the case of inventions made in the United States, the Director of the USPTO must issue a license before applicants can apply for a patent in a foreign country. The filing of a U.S. patent application serves as a request for a foreign filing license. The application's filing receipt contains further information and guidance as to the status of applicant's license for foreign filing.

Applicants may wish to consult the USPTO booklet, "General Information Concerning Patents" (specifically, the section entitled "Treaties and Foreign Patents") for more information on timeframes and deadlines for filing foreign patent applications. The guide is available either by contacting the USPTO Contact Center at 800-786-9199, or it can be viewed on the USPTO website at http://www.uspto.gov/web/offices/pac/doc/general/index.html.

For information on preventing theft of your intellectual property (patents, trademarks and copyrights), you may wish to consult the U.S. Government website, http://www.stopfakes.gov. Part of a Department of Commerce initiative, this website includes self-help "toolkits" giving innovators guidance on how to protect intellectual property in specific countries such as China, Korea and Mexico. For questions regarding patent enforcement issues, applicants may call the U.S. Government hotline at 1-866-999-HALT (1-866-999-4158).

LICENSE FOR FOREIGN FILING UNDER

Title 35, United States Code, Section 184

Title 37, Code of Federal Regulations, 5.11 & 5.15

GRANTED

The applicant has been granted a license under 35 U.S.C. 184, if the phrase "IF REQUIRED, FOREIGN FILING LICENSE GRANTED" followed by a date appears on this form. Such licenses are issued in all applications where the conditions for issuance of a license have been met, regardless of whether or not a license may be required as

set forth in 37 CFR 5.15. The scope and limitations of this license are set forth in 37 CFR 5.15(a) unless an earlier license has been issued under 37 CFR 5.15(b). The license is subject to revocation upon written notification. The date indicated is the effective date of the license, unless an earlier license of similar scope has been granted under 37 CFR 5.13 or 5.14.

This license is to be retained by the licensee and may be used at any time on or after the effective date thereof unless it is revoked. This license is automatically transferred to any related applications(s) filed under 37 CFR 1.53(d). This license is not retroactive.

The grant of a license does not in any way lessen the responsibility of a licensee for the security of the subject matter as imposed by any Government contract or the provisions of existing laws relating to espionage and the national security or the export of technical data. Licensees should apprise themselves of current regulations especially with respect to certain countries, of other agencies, particularly the Office of Defense Trade Controls, Department of State (with respect to Arms, Munitions and Implements of War (22 CFR 121-128)); the Bureau of Industry and Security, Department of Commerce (15 CFR parts 730-774); the Office of Foreign AssetsControl, Department of Treasury (31 CFR Parts 500+) and the Department of Energy.

NOT GRANTED

No license under 35 U.S.C. 184 has been granted at this time, if the phrase "IF REQUIRED, FOREIGN FILING LICENSE GRANTED" DOES NOT appear on this form. Applicant may still petition for a license under 37 CFR 5.12, if a license is desired before the expiration of 6 months from the filing date of the application. If 6 months has lapsed from the filing date of this application and the licensee has not received any indication of a secrecy order under 35 U.S.C. 181, the licensee may foreign file the application pursuant to 37 CFR 5.15(b).

UNITED STATES PATENT AND TRADEMARK OFFICE

Commissioner for Patents
United States Patent and Trademark Office
P.O. Box 1450
Alexandria, VA 22313-1450
www.uspto.gov

Mark H. Krietzman
c/o The Eclipse Group
Suite 150
1920 Main Street
Irvine CA 92614

MAILED
MAR 28 2011
OFFICE OF PETITIONS

In re Application of :
Thomas R. Vencill et al. :
Application No. 12/407,705 :
Filed: March 19, 2009 :
Attorney Docket No. **37929-32550** :

DECISION ON PETITION
TO WITHDRAW
FROM RECORD

This is a decision on the request to withdraw as attorney of record under 37 CFR § 1.36(b), filed February 15, 2011.

The request is **NOT APPROVED**.

The request cannot be approved because it lacks the name of the first inventor or the assignee of record that is associated with the address listed in the request. Therefore, the change of correspondence address is considered improper.

The Office will only accept correspondence address changes to the most current address information provided for the assignee of the entire interest *who properly became of record under 37 CFR 3.71,* or, if no assignee of the entire interest has properly been made of record, the most current address information provided for the first named inventor. 37 CFR 3.71(c) states:

> *An assignee becomes of record either in a national patent application or a reexamination proceeding by filing a statement in compliance with § 3.73(b) that is signed by a party who is authorized to act on behalf of the assignee.*

The assignee must establish its ownership of the patent to the satisfaction of the Director. In this regard, the statement under 37 CFR 3.73(b) must have either: (i) documentary evidence of a chain of title from the original owner to the assignee (*e.g.*, copy of an executed assignment), and a statement affirming that the documentary evidence of the chain of title from the original owner to the assignee was or concurrently is being submitted for recordation pursuant to § 3.11; or (ii) a statement specifying where documentary evidence of a chain of title from the original owner to the assignee is recorded in the assignment records of the Office (*e.g.*, reel and frame number).

A courtesy copy of this decision is being mailed to the address on the request. However, all future communications from the Office will continue to be directed to the above-listed address until otherwise notified by applicant.

Telephone inquires concerning this decision should be directed to the undersigned at (571) 272-4584.

/JoAnne Burke/
JoAnne Burke
Petitions Examiner
Office of Petitions

cc: Marlan D. Walker
2050 Main Street, Suite 600
Irvine, CA 92614

UNITED STATES PATENT AND TRADEMARK OFFICE

Commissioner for Patents
United States Patent and Trademark Office
P.O. Box 1450
Alexandria, VA 22313-1450
www.uspto.gov

MAILED

JUN 23 2011

OFFICE OF PETITIONS

**TOWNSEND AND TOWNSEND AND CREW LLP/
PULMONX 017534
TWO EMBARCADERO CENTER,
EIGHT FLOOR
SAN FRANCISCO CA 94111-3834**

In re Application of	:	
ALJURI, et al	:	
Application No. 12/407,709	:	DECISION ON PETITION
Filed: March 19, 2009	:	TO WITHDRAW
Attorney Docket No. 017534-003720US	:	FROM RECORD
	:	

This is a decision on the Request to Withdraw as attorney or agent of record under 37 C.F.R. 1.36(b), filed May 18, 2011.

The request is **NOT APPROVED.**

A grantable request to withdraw as attorney/agent of record must be signed by every attorney/agent seeking to withdraw or contain a clear indication that one attorney is signing on behalf of another/others. The Office requires the practitioner(s) requesting withdrawal to certify that he, she, or they have: (1) given reasonable notice to the client, prior to the expiration of the response period, that the practitioner(s) intends to withdraw from employment; (2) delivered to the client or a duly authorized representative of the client all papers and property (including funds) to which the client is entitled; and (3) notified the client of any responses that may be due and the time frame within which the client must respond, pursuant 37 CFR 10.40(c).

The request cannot be approved because there is no indication that the acts noted above at items (1) - (3) have been performed.

Further, the Office will no longer accept address changes to a new practitioner or law firm filed with a Request, absent the filing of a power of attorney to the new representative. The Office will either change the correspondence address of record to the most current address information provided for the assignee of the entire interest who properly became of record under 37 CFR 3.71 or, if no assignee of the entire interest has properly been made of record under 37 CFR 3.71, the most current address information provided for the first named inventor.

Accordingly, the request to withdraw from record cannot be approved because the request does not include the current correspondence address of a law firm or practitioner who has filed a proper power of attorney.

Future submissions should include an acceptable reason as described in 37 CFR 10.40. Please visit www.uspto.gov to review the updated Request for Withdrawal As Attorney or Agent (PTO/SB/83) form.

All future communications from the Office will continue to be directed to the above-identified address until otherwise properly notified.

Telephone inquiries concerning this decision should be directed to the undersigned at (571) 272- 6735.

/Diane C. Goodwyn/
Diane C. Goodwyn
Petitions Examiner
Office of Petitions

UNITED STATES PATENT AND TRADEMARK OFFICE

COMMISSIONER FOR PATENTS
UNITED STATES PATENT AND TRADEMARK OFFICE
P.O. BOX 1450
ALEXANDRIA, VA 22313-1450
www.uspto.gov

LAWRENCE Y.D. HO & ASSOCIATES PTE LTD
30 BIDEFORD ROAD, #02-02, THONGSIA BUILDING
SINGAPORE 22992-2 SG SINGAPORE

MAILED

DEC 15 2010

OFFICE OF PETITIONS

In re Application of :
Lai :
Application No. 12/407,796 : DECISION ON PETITION
Filed: March 20, 2009 : UNDER 37 CFR 1.78(a)(3)
Attorney Docket No. 1603.P002US/TYK/JC :

This is a decision on the petition under 37 CFR 1.78(a)(3), filed November 23, 2010, to accept an unintentionally delayed claim under 35 U.S.C. § 120 for the benefit of priority to the prior-filed nonprovisional applications set forth in the amendment filed with the petition.

The petition is **DISMISSED**.

A petition for acceptance of a claim for late priority under 37 CFR 1.78(a)(3) is only applicable to those applications filed on or after November 29, 2000. Further, the petition is appropriate only after the expiration of the period specified in 37 CFR 1.78(a)(2)(ii). In addition, the petition under 37 CFR 1.78(a)(3) must be accompanied by:

(1) the reference required by 35 U.S.C. § 120 and 37 CFR 1.78(a)(2)(i) of the prior-filed application, unless previously submitted;
(2) the surcharge set forth in § 1.17(t); and
(3) a statement that the entire delay between the date the claim was due under 37 CFR 1.78(a)(2)(ii) and the date the claim was filed was unintentional. The Director may require additional information where there is a question whether the delay was unintentional.

The petition does not comply with item (1)

37 CFR 1.78(a)(2)(i) requires that any nonprovisional application claiming the benefit of one or more prior-filed copending nonprovisional applications must contain or be amended to contain a reference to each such prior-filed application, identifying it by application number (consisting of the series code and serial number) and indicating the relationship of the applications. The relationship between the applications is whether the subject application is a continuation, divisional, or continuation-in-part of a prior-filed nonprovisional application. An example of a proper benefit claim is: "This application is a continuation of Application No. 10/---, filed---." A benefit claim that merely states: "This application claims the benefit of Application No. 10/---, filed---," does not comply with 37 CFR 1.72(a)(2)(i) since the proper relationship, which

includes the type of continuing application, is not stated. Also, the status of each nonprovisional parent application (if it is patented or abandoned) should also be indicated, following the filing date of the parent nonprovisional application. *See* MPEP Section 201.11, Reference to Prior Nonprovisional Applications.

The amendment is not acceptable as it fails to state the status of the prior-filed application in accordance with the provisions of 37 CFR 1.78(a)(2)(i). The application data sheet filed with the petition is not acceptable as it fails to comply with 37 CFR 1.76(c)(2).

Before the petition under 37 CFR § 1.78(a)(3) can be granted, a renewed petition under 37 CFR § 1.78(a)(3) an Application Data Sheet or a substitute amendment (complying with 37 CFR 1.121 and 37 CFR 1.76(b)(5)), which states the relationship of the prior-filed application to this application, are required.

Further correspondence with respect to this matter should be addressed as follows:

By mail:
Mail Stop PETITIONS
Commissioner for Patents
Post Office Box 1450
Alexandria, VA 22313-1450

By hand:
Customer Service Window
Mail Stop Petitions
Randolph Building
401 Dulany Street
Alexandria, VA 22314

By fax:
(571) 273-8300
ATTN: Office of Petitions

Any inquiries concerning this decision may be directed to Petitions Attorney Alesia M. Brown at (571) 272-3205.

Chris Bottorff
Supervisor
Office of Petitions

UNITED STATES PATENT AND TRADEMARK OFFICE

Commissioner for Patents
United States Patent and Trademark Office
P.O. Box 1450
Alexandria, VA 22313-1450
www.uspto.gov

In re Application of
Anthony F. Verna

Application No. 12407916

Filed: March 20,2009

Attorney Docket No. 28386-6

:DECISION ON PETITION TO MAKE SPECIAL
:UNDER 37 CFR 1.102(c)(1)

This is a decision on the electronic petition under 37 CFR 1.102 (c)(1), filed 05-MAR-2012 to make the above-identified application special based on applicant's age as set forth in MPEP § 708.02, Section IV.

The petition is **GRANTED**.

A grantable petition to make an application special under 37 CFR 1.102(c)(1), MPEP § 708.02, Section IV: Applicant's Age must include a statement by applicant or a registered practitioner having evidence that applicant is at least 65 years of age. No fee is required.

Accordingly, the above-identified application has been accorded "special" status and will be taken up for action by the examiner upon the completion of all pre-examination processing.

Telephone inquiries concerning this electronic decision should be directed to the Electronic Business Center at 866-217-9197.

All other inquiries concerning either the examination or status of the application should be directed to the Technology Center.

Doc code : PET.OP.AGE
Description : Petition to make special based on Age/Health

PTO/SB/130 (07-09)
Approved for use through 07/31/2012. OMB 0651- 0031
U.S. Patent and Trademark Office; U.S. DEPARTMENT OF COMMERCE
Under the Paperwork Reduction Act of 1995, no persons are required to respond to a collection of information unless it contains a valid OMB control number

PETITION TO MAKE SPECIAL BASED ON AGE FOR ADVANCEMENT OF EXAMINATION UNDER 37 CFR 1.102(c)(1)

Application Information

Application Number	12/407,916	Confirmation Number	8271	Filing Date	2009-03-20
Attorney Docket Number (optional)	28386-6	Art Unit	2493	Examiner	Victor Lesniewski
First Named Inventor	Anthony F. Verna				
Title of Invention	TALKING REPLAY				

Attention: Office of Petitions
An application may be made special for advancement of examination upon filing of a petition showing that the applicant is 65 years of age, or more. No fee is required with such a petition. See 37 CFR 1.102(c)(1) and MPEP 708.02 (IV).

APPLICANT HEREBY PETITIONS TO MAKE SPECIAL FOR ADVANCEMENT OF EXAMINATION IN THIS APPLICATION UNDER 37 CFR 1.102(c)(1) and MPEP 708.02 (IV) ON THE BASIS OF THE APPLICANT'S AGE.

A grantable petition requires one of the following items:
(1) Statement by one named inventor in the application that he/she is 65 years of age, or more; or
(2) Certification by a registered attorney/agent having evidence such as a birth certificate, passport, driver's license, etc. showing one named inventor in the application is 65 years of age, or more.

Name of Inventor who is 65 years of age, or older

Given Name	Middle Name	Family Name	Suffix
Anthony	F.	Verna	

A signature of the applicant or representative is required in accordance with 37 CFR 1.33 and 10.18. Please see 37 CFR 1.4(d) for the format of the signature.

Select (1) or (2) :

○ (1) I am an inventor in this application and I am 65 years of age, or more.

● (2) I am an attorney or agent registered to practice before the Patent and Trademark Office, and I certify that I am in possession of evidence, and will retain such in the application file record, showing that the inventor listed above is 65 years of age, or more.

Signature	/LUIS ORTIZ/	Date (YYYY-MM-DD)	2012-03-05
Name	Luis Ortiz	Registration Number	36230

PTO/SB/130 (07-09)
Approved for use through 07/31/2012. OMB 0651- 0031
U.S. Patent and Trademark Office; U.S. DEPARTMENT OF COMMERCE
Under the Paperwork Reduction Act of 1995, no persons are required to respond to a collection of information unless it contains a valid OMB control number

Privacy Act Statement

The Privacy Act of 1974 (P.L. 93-579) requires that you be given certain information in connection with your submission of the attached form related to a patent application or patent. Accordingly, pursuant to the requirements of the Act, please be advised that: (1) the general authority for the collection of this information is 35 U.S.C. 2(b)(2); (2) furnishing of the information solicited is voluntary; and (3) the principal purpose for which the information is used by the U.S. Patent and Trademark Office is to process and/or examine your submission related to a patent application or patent. If you do not furnish the requested information, the U.S. Patent and Trademark Office may not be able to process and/or examine your submission, which may result in termination of proceedings or abandonment of the application or expiration of the patent.

The information provided by you in this form will be subject to the following routine uses:

1. The information on this form will be treated confidentially to the extent allowed under the Freedom of Information Act (5 U.S.C. 552) and the Privacy Act (5 U.S.C. 552a). Records from this system of records may be disclosed to the Department of Justice to determine whether the Fr eedom of Information Act requires disclosure of these records.

2. A record from this system of records may be disclosed, as a routine use, in the course of presenting evidence to a court, magistrate, or administrative tribunal, including disclosures to opposing counsel in the course of settlement negotiations.

3. A record in this system of records may be disclosed, as a routine use, to a Member of Congress submitting a request involving an individual, to whom the record pertains, when the individual has requested assistance from the Member with respect to the subject matter of the record.

4. A record in this system of records may be disclosed, as a routine use, to a contractor of the Agency having need for the information in order to perform a contract. Recipients of information shall be required to comply with the requirements of the Privacy Act of 1974, as amended, pursuant to 5 U.S.C. 552a(m).

5. A record related to an International Application filed under the Patent Cooperation Treaty in this system of records may be disclosed, as a routine use, to the International Bureau of the World Intellectual Property Organization, pursuant to the Patent Cooperation Treaty.

6. A record in this system of records may be disclosed, as a routine use, to another federal agency for purposes of National Security review (35 U.S.C. 181) and for review pursuant to the Atomic Energy Act (42 U.S.C. 218(c)).

7. A record from this system of records may be disclosed, as a routine use, to the Administrator, General Services, or his/her designee, during an inspection of records conducted by GSA as part of that agency's responsibility to recommend improvements in records management practices and programs, under authority of 44 U.S.C. 2904 and 2906. Such disclosure shall be made in accordance with the GSA regulations governing inspection of records for this purpose, and any other relevant (i.e., GSA or Commerce) directive. Such disclosure shall not be used to make determinations about indivi duals.

8. A record from this system of records may be disclosed, as a routine use, to the public after either publication of the application pursuant to 35 U.S.C. 122(b) or issuance of a patent pursuant to 35 U.S.C. 151. Further, a record may be disclosed, subject to the limitations of 37 CFR 1.14, as a routine use, to the public if the record was filed in an application which became abandoned or in which the proceedings were terminated and which application is referenced by either a published application, an application open to public inspections or an issued patent.

9. A record from this system of records may be disclosed, as a routine use, to a Federal, State, or local law enforcement agency, if the USPTO becomes aware of a violation or potential violation of law or regulation.

UNITED STATES PATENT AND TRADEMARK OFFICE

Commissioner for Patents
United States Patent and Trademark Office
P.O. Box 1450
Alexandria, VA 22313-1450
www.uspto.gov

MOORE & VAN ALLEN, PLLC FOR BOFA
430 DAVIS DRIVE, SUITE 500
POST OFFICE BOX 13706
RESEARCH TRIANGLE PARK, NC 27709

MAILED

NOV 04 2011

OFFICE OF PETITIONS

In re Application of :
William F. Borowski, et. al. :
Application No. 12/407,965 : DECISION ON PETITION
Filed: March 20, 2009 :
Attorney Docket No. 3148US1.014033.496 :

This is a decision on the petition under 37 CFR 1.181 (no fee), filed September 26, 2011, requesting withdrawal of the holding of abandonment in the above-identified application.

This application was held abandoned for failure to timely file a response to the non-final Office action mailed February 3, 2011. A Notice of Abandonment was mailed on September 6, 2011.

A review of the written record indicates no irregularity in the mailing of the Office action and, in the absence of any irregularity, there is a strong presumption that the Office action was properly mailed to the practitioner at the address of record. This presumption may be overcome by a showing that the Office action was not in fact received. In this regard, the showing required to establish the failure to receive the Office action must consist of the following:

1. a statement from practitioner stating that the Office action was not received by the practitioner;

2. a statement from the practitioner attesting to the fact that a search of the file jacket and docket records indicates that the Office action was not received; and

3. a copy of the docket record where the nonreceived Office action would have been entered had it been received and docketed must be attached to and referenced in the practitioner's statement.

The petition satisfies the above-stated requirements. Accordingly, the petition is **GRANTED**. In view of the above, the holding of abandonment is withdrawn.

This application file is being referred to Technology Center Art Unit 3691 for review of the amendment filed with the present petition.

Telephone inquiries regarding this decision should be directed to the undersigned at (571) 272-3226.

Andrea Smith
Petitions Examiner
Office of Petitions

Doc Code: PET.AUTO **Document Description: Petition automatically granted by EFS-Web**	PTO/SB/83 U.S. Patent and Trademark Office Department of Commerce

Electronic Petition Request	**REQUEST FOR WITHDRAWAL AS ATTORNEY OR AGENT AND CHANGE OF CORRESPONDENCE ADDRESS**
Application Number	12407993
Filing Date	20-Mar-2009
First Named Inventor	Richard EWERS
Art Unit	3736
Examiner Name	DEVIN HENSON
Attorney Docket Number	USGINZ07400
Title	STEERABLE TOOL GUIDE FOR USE WITH FLEXIBLE ENDOSCOPIC MEDICAL DEVICES

◉ Please withdraw me as attorney or agent for the above identified patent application and the practitioners of record associated with Customer Number: 40518

The reason(s) for this request are those described in 37 CFR:

10.40(b)(4)

Certifications

☒ I/We have given reasonable notice to the client, prior to the expiration of the response period, that the practitioner(s) intend to withdraw from employment

☒ I/We have delivered to the client or a duly authorized representative of the client all papers and property (including funds) to which the client is entitled

☒ I/We have notified the client of any responses that may be due and the time frame within which the client must respond

Change the correspondence address and direct all future correspondence to the first named inventor or assignee that has properly made itself of record pursuant to 37 CFR 3.71:

Name	USGI Medical, Inc.
Address	1140 Calle Cordillera
City	San Clemente
State	CA
Postal Code	92673
Country	US

I am authorized to sign on behalf of myself and all withdrawing practitioners.	
Signature	/Johney U. Han/
Name	Johney U. Han
Registration Number	45565

UNITED STATES PATENT AND TRADEMARK OFFICE

Commissioner for Patents
United States Patent and Trademark Office
P.O. Box 1450
Alexandria, VA 22313-1450
www.uspto.gov

Decision Date : October 7,2011

In re Application of :

Richard EWERS

Application No : 12407993

Filed : 20-Mar-2009

Attorney Docket No : USGINZ07400

DECISION ON REQUEST TO WITHDRAW AS ATTORNEY/AGENTOF RECORD

This is an electronic decision on the Request to Withdraw as attorney or agent of record under 37 CFR § 1.36(b), filed October 7,2011

The request is **APPROVED.**

The request was signed by Johney U. Han (registration no. 45565) on behalf of all attorneys/agents associated with Customer Number 40518 . All attorneys/agents associated with Cusotmer Number 40518 have been withdrawn.

Since there are no remaining attorneys of record, all future communications from the Office will be directed to the first named inventor or assignee that has properly made itself of record pursuant to 37 CFR 3.71, with correspondence address:

Name	USGI Medical, Inc.
Name2	
Address 1	1140 Calle Cordillera
Address 2	
City	San Clemente
State	CA
Postal Code	92673
Country	US

As a reminder, requester is required to inform the first named inventor or assignee that has properly made itself of record pursuant to 37 CFR 3.71 of the electronically processed petition.

Telephone inquiries concerning this decision should be directed to the Patent Electronic Business Center (EBC) at 866-217-9197.

Office of Petitions

UNITED STATES PATENT AND TRADEMARK OFFICE

Commissioner for Patents
United States Patent and Trademark Office
P.O. Box 1450
Alexandria, VA 22313-1450
www.uspto.gov

Jackson Intellectual Property Group PLLC
106 Starvale Lane
Shipman VA 22971

MAILED

JAN 20 2011

OFFICE OF PETITIONS

In re Application of :
LIN et al. : DECISION ON PETITION
Application No. 12/408,001 :
Filed: 03/20/2009 :
Attorney Docket No. 7005.187 :

This is a decision on the petition under 37 CFR 1.137(b), filed November 29, 2010, to revive the above-identified application.

The petition is **granted**.

The above-identified application became abandoned for failure to file a timely response to the Notice to File Missing Parts of Nonprovisional Application mailed April 2, 2009, which set a two-month extendable period to reply. No extensions of time under the provisions of 37 CFR 1.136(a) were obtained. Accordingly, the above-identified application became abandoned on June 3, 2009. A Notice of Abandonment was mailed on December 9, 2009.

Petitioner has met the requirements to revive the above-identified application pursuant to 37 CFR 1.137(b). Petitioner submitted the required reply, paid the petition fee, and made the proper statement of unintentional delay.

This matter is being referred to the Office of Patent Application Processing.

Telephone inquiries specific to this decision may be directed to the undersigned at (571) 272-3211.

C. T. Donnell

Christina Tartera Donnell
Senior Petitions Attorney
Office of Petitions

Doc Code: PPH.PCT.652
Document Description: Petition to make special under PCT-Patent Pros Hwy

PTO/SB/20PCT-EP (05-10)
Approved for use through 01/31/2012. OMB 0651-0058
U.S. Patent and Trademark Office; U. S. DEPARTMENT OF COMMERCE
Under the Paperwork Reduction Act of 1995, no persons are required to respond to a collection of information unless it displays a valid OMB control number.

REQUEST FOR PARTICIPATION IN THE PATENT COOPERATION TREATY - PATENT PROSECUTION HIGHWAY (PCT-PPH) PILOT PROGRAM BETWEEN THE EUROPEAN PATENT OFFICE (EPO) AND THE USPTO

Application No:	12/408,028	Filing date:	March 20, 2009
First Named Inventor:	Mukherjee, Rajat P.		
Title of the Invention:	METHOD AND APPARATUS TO ENABLE FALLBACK TO CIRCUIT SWITCHED DOMAIN FROM PACKET SWITCHED DOMAIN		

THIS REQUEST FOR PARTICIPATION IN THE PCT-PPH PILOT PROGRAM ALONG WITH THE REQUIRED DOCUMENTS MUST BE SUBMITTED VIA EFS-WEB. INFORMATION REGARDING EFS-WEB IS AVAILABLE AT HTTP://WWW.USPTO.GOV/EBC/EFS_HELP.HTML

APPLICANT HEREBY REQUESTS PARTICIPATION IN THE PCT-PPH PROGRAM AND PETITIONS TO MAKE THE ABOVE-IDENTIFIED APPLICATION SPECIAL UNDER THE PCT-PPH PROGRAM.

The above-identified application is (1) a national stage entry of the corresponding PCT application, or (2) a national stage entry of another PCT application which claims priority to the corresponding PCT application, or (3) a national application that claims domestic/ foreign priority to the corresponding PCT application, or (4) a national application which forms the basis for the priority claim in the corresponding PCT application, or (5) a continuing application of a U.S. application that satisfies one of (1) to (4) above, or (6) a U.S. application that claims domestic benefit to a U.S. provisional application which forms the basis for the priority claim in the corresponding PCT application.

The corresponding PCT application number(s) is/are: PCT/US09/37685

The international filing date of the corresponding PCT application(s) is/are: March 19, 2009

I. List of Required Documents:

a. **A copy of the latest international work product (WO/ISA, WO/IPEA, or IPER) in the above–identified corresponding PCT application(s)**

☒ Is attached

☐ Is not attached because the document is already in the U.S. application.

b. **A copy of all claims which were indicated as having novelty, inventive step and industrial applicability in the above-identified corresponding PCT application(s).**

☒ Is attached.

☐ Is not attached because the document is already in the U.S. application.

c. **English translations of the documents in a. and b. above are attached (if the documents are not in the English language). A statement that the English translation is accurate is attached for the document in b. above.**

This collection of information is required by 35 U.S.C. 119, 37 CFR 1.55, and 37 CFR 1.102(d). The information is required to obtain or retain a benefit by the public, which is to file (and by the USPTO to process) an application. Confidentiality is governed by 35 U.S.C. 122 and 37 CFR 1.11 and 1.14. This collection is estimated to take 2 hours to complete, including gathering, preparing, and submitting the completed application form to the USPTO. Time will vary depending upon the individual case. Any comments on the amount of time you require to complete this form and/or suggestions for reducing this burden should be sent to the Chief Information Officer, U.S. Patent and Trademark Office, U.S. Department of Commerce, P.O. Box 1450, Alexandria, VA 22313-1450. DO NOT SEND FEES OR COMPLETED FORMS TO THIS ADDRESS.

PTO/SB/20PCT-EP (05-10)
Approved for use through 01/31/2012. OMB 0651-0058
U.S.Patent and Trademark Office; U.S. DEPARTMENT OF COMMERCE
Under the Paperwork Reduction Act of 1995, no persons are required to respond to a collection of information unless it displays a valid OMB control number.

REQUEST FOR PARTICIPATION IN THE PCT-PPH PILOT PROGRAM BETWEEN THE EPO AND THE USPTO

(continued)

Application No.:	12/408,028
First Named Inventor:	Mukherjee, Rajat P.

d. **(1) An information disclosure statement listing the documents cited in the international work products (ISR, WO/ISA, WO/IPEA, IPER) of the corresponding PCT application.**

☐ Is attached

☒ Has already been filed in the above-identified U.S. application on August 13, 2009

(2) Copies of all documents (except) for U.S. patents or U.S. patent application publications)

☐ Are attached.

☒ Have already been filed in the above-identified U.S. application on August 13, 2009

II. Claims Correspondence Table:

Claims in US Application	Patentable Claims in the corresponding PCT Application	Explanation regarding the correspondence
1-11	1-11	Sufficiently corresponds to claims in PCT application

III. All the claims in the US application sufficiently correspond to the patentable claims in the corresponding PCT application.

Signature /Neil C. Maskeri/	Date February 7, 2011
Name (Print/Typed) Neil C. Maskeri	Registration Number 61,591

Privacy Act Statement

The **Privacy Act of 1974 (P.L. 93-579)** requires that you be given certain information in connection with your submission of the attached form related to a patent application or patent. Accordingly, pursuant to the requirements of the Act, please be advised that: (1) the general authority for the collection of this information is 35 U.S.C. 2(b)(2); (2) furnishing of the information solicited is voluntary; and (3) the principal purpose for which the information is used by the U.S. Patent and Trademark Office is to process and/or examine your submission related to a patent application or patent. If you do not furnish the requested information, the U.S. Patent and Trademark Office may not be able to process and/or examine your submission, which may result in termination of proceedings or abandonment of the application or expiration of the patent.

The information provided by you in this form will be subject to the following routine uses:

1. The information on this form will be treated confidentially to the extent allowed under the Freedom of Information Act (5 U.S.C. 552) and the Privacy Act (5 U.S.C 552a). Records from this system of records may be disclosed to the Department of Justice to determine whether disclosure of these records is required by the Freedom of Information Act.
2. A record from this system of records may be disclosed, as a routine use, in the course of presenting evidence to a court, magistrate, or administrative tribunal, including disclosures to opposing counsel in the course of settlement negotiations.
3. A record in this system of records may be disclosed, as a routine use, to a Member of Congress submitting a request involving an individual, to whom the record pertains, when the individual has requested assistance from the Member with respect to the subject matter of the record.
4. A record in this system of records may be disclosed, as a routine use, to a contractor of the Agency having need for the information in order to perform a contract. Recipients of information shall be required to comply with the requirements of the Privacy Act of 1974, as amended, pursuant to 5 U.S.C. 552a(m).
5. A record related to an International Application filed under the Patent Cooperation Treaty in this system of records may be disclosed, as a routine use, to the International Bureau of the World Intellectual Property Organization, pursuant to the Patent Cooperation Treaty.
6. A record in this system of records may be disclosed, as a routine use, to another federal agency for purposes of National Security review (35 U.S.C. 181) and for review pursuant to the Atomic Energy Act (42 U.S.C. 218(c)).
7. A record from this system of records may be disclosed, as a routine use, to the Administrator, General Services, or his/her designee, during an inspection of records conducted by GSA as part of that agency's responsibility to recommend improvements in records management practices and programs, under authority of 44 U.S.C. 2904 and 2906. Such disclosure shall be made in accordance with the GSA regulations governing inspection of records for this purpose, and any other relevant (*i.e.*, GSA or Commerce) directive. Such disclosure shall not be used to make determinations about individuals.
8. A record from this system of records may be disclosed, as a routine use, to the public after either publication of the application pursuant to 35 U.S.C. 122(b) or issuance of a patent pursuant to 35 U.S.C. 151. Further, a record may be disclosed, subject to the limitations of 37 CFR 1.14, as a routine use, to the public if the record was filed in an application which became abandoned or in which the proceedings were terminated and which application is referenced by either a published application, an application open to public inspection or an issued patent.
9. A record from this system of records may be disclosed, as a routine use, to a Federal, State, or local law enforcement agency, if the USPTO becomes aware of a violation or potential violation of law or regulation.

CLAIMS

What is claimed is:

1. A wireless transmit/receive unit (WTRU) comprising:

a processor comprising:

a Non-Access Stratum (NAS) configured to

determine whether to perform a Circuit Switched (CS) fallback based on an Internet Protocol (IP) Multimedia Subsystem (IMS) registration status, and

send a service request indicating a request to perform a Circuit Switched (CS) fallback on a condition that the WTRU is attached to a CS domain; and

an Access Stratum (AS) configured to

receive the CS service request from the NAS,

send an indication of the CS service request in a Radio Resource Control (RRC) message to an Evolved Universal Mobile Telecommunications System (UMTS) Terrestrial Radio Access Network (E-UTRAN), wherein the RRC message includes CS service information, and

receive a handover command in response to the CS service request.

2. The WTRU of claim 1, wherein the AS is further configured to send an indication of the CS fallback to the NAS.

3. The WTRU of claim 1, wherein the AS comprises:

a legacy AS; and

a Long Term Evolution (LTE) AS configured to receive the service request from the NAS, send the indication of the CS service request in the RRC message to the E-UTRAN, and receive the handover command.

4. The WTRU of claim 3, wherein the legacy AS is configured to send an indication of the CS fallback to the NAS on a condition that the legacy AS receives a handover parameter from the LTE AS.

5. The WTRU of claim 1, wherein the NAS comprises:

a Mobility Management (MM) unit configured to notify an Evolved Packet System (EPS) Mobility Management (EMM) of a CS call, wherein the EMM is configured to send a notification of the service request to the AS and send an indication to the MM that the WTRU is operating in a CS domain.

6. The WTRU of claim 1, wherein the AS is configured to set an establishment cause in the RRC message to a value that indicates an originating CS service.

7. The WTRU of claim 1, wherein the AS is configured to provide details of the CS service in an establishment cause.

8. The WTRU of claim 1 further comprising:

a Mobile Node (MN) configured to determine whether to fallback to CS based on an Internet Protocol (IP) Multimedia Subsystem (IMS) registration status.

9. A method for circuit switched (CS) fallback performed by a wireless transmit/receive unit (WTRU), the method comprising:

determining whether to perform a CS fallback based on an Internet Protocol (IP) Multimedia Subsystem (IMS) registration status;

receiving a CS service request from a Non-Access Stratum (NAS) of the WTRU, the service request indicating a request to perform a CS fallback on a condition that the WTRU is attached to a CS domain;

sending an indication of the CS service request in a Radio Resource Control (RRC) message to an Evolved Universal Mobile Telecommunications System (UMTS) Terrestrial Radio Access Network (E-UTRAN), wherein the RRC message includes CS service information; and

receiving a handover command in response to the CS service request.

10. The method of claim 9 further comprising:

sending an indication of the CS fallback to the NAS.

11. The method of claim 9 further comprising:

notifying an Evolved Packet System (EPS) Mobility Management (EMM) of a CS call;

sending a notification of the service request to an Access Stratum (AS) of the WTRU; and

sending an indication to a Mobility Management (MM) unit that the WTRU is operating in a CS domain.

UNITED STATES PATENT AND TRADEMARK OFFICE

UNITED STATES DEPARTMENT OF COMMERCE
United States Patent and Trademark Office
Address: COMMISSIONER FOR PATENTS
P.O. Box 1450
Alexandria, Virginia 22313-1450
www.uspto.gov

APPLICATION NO.	FILING DATE	FIRST NAMED INVENTOR	ATTORNEY DOCKET NO.	CONFIRMATION NO.
12/408,028	03/20/2009	Rajat P. Mukherjee	IPH-2-2041.01.US	8463

24374 7590 03/02/2011

VOLPE AND KOENIG, P.C.
DEPT. ICC
UNITED PLAZA
30 SOUTH 17TH STREET
PHILADELPHIA, PA 19103

EXAMINER	
YAO, KWANG BIN	

ART UNIT	PAPER NUMBER
2473	

NOTIFICATION DATE	DELIVERY MODE
03/02/2011	ELECTRONIC

Please find below and/or attached an Office communication concerning this application or proceeding.

The time period for reply, if any, is set in the attached communication.

Notice of the Office communication was sent electronically on above-indicated "Notification Date" to the following e-mail address(es):

eoffice@volpe-koenig.com

UNITED STATES PATENT AND TRADEMARK OFFICE

Commissioner for Patents
United States Patent and Trademark Office
P.O. Box 1450
Alexandria, VA 22313-1450
www.uspto.gov

VOLPE AND KOENIG, P.C.
DEPT. ICC
UNITED PLAZA
30 SOUTH 17TH STREET
PHILADELPHIA PA 19103

In re Application of: MUKHERJEE, RAJAT et al.
Application No. 12408028
Filed: March 20, 2009
For: METHOD AND APPARATUS TO ENABLE FALLBACK TO CIRCUIT SWITCHED DOMAIN FROM PACKET SWITCHED DOMAIN

DECISION ON REQUEST TO PARTICIPATE IN PCT-PATENT PROSECUTION HIGHWAY PROGRAM AND PETITION TO MAKE SPECIAL UNDER 37 CFR 1.102(d)

MAILED

MAR 01 2011

DIRECTOR OFFICE
TECHNOLOGY CENTER 2400

This is a decision on the request to participate in the PCT- Patent Prosecution Highway (PPH) pilot program and the petition under 37 CFR 1.102(d), filed February 7, 2011, to make the above-identified application special.

The petition is **GRANTED.**

A grantable request to participate in the PCT PPH program and petition to make special require:

(1) The relationship between the corresponding U.S. application for which participation in the PCT-PPH pilot program is requested and the PCT application satisfies one of the following:

(a) The U.S. application is a national stage entry of the corresponding PCT application.

(b)The U.S. application is a national application which forms the basis for the priority claim in the corresponding PCT application.

(c) The U.S. application is a national stage entry of another PCT application (which can be filed in any competent receiving office) which claims priority to the corresponding PCT application.

(d) The U.S. application is a national application claiming foreign/domestic priority to the corresponding PCT application.

(e) The U.S. application is a continuing application (continuation, divisional, or continuation-in-part) of the U.S. application which satisfies one of the above (a) to (d) scenarios.

(2) The latest work product in the international phase of the PCT application corresponding to the U.S. application indicates at least one claim in the PCT application has novelty, inventive step and industrial applicability. In case any observation is described in Box VIII of the WO/ISA, or WO/IPEA, or IPER which forms the basis for the PCT-PPH request, applicant must identify and explain why the claim(s) is/are not subject to any observation described in Box VIII irrespective of whether an amendment is submitted to correct the observation described in Box VIII.

(3) All the claims in each U.S. application for which a request for participation in the PCT-PPH pilot program is made must sufficiently correspond to one or more of those claims indicated as having novelty, inventive step and industrial applicability and free of any observation described in Box VIII in the latest work product of the corresponding PCT application.

(4) Substantive examination of the U.S. application for which participation in the PCT-PPH pilot program is requested has not begun.

(5) Applicant must submit a copy of the latest international work product which indicated that the claim(s) has/have novelty, inventive step and industrial applicability along with an English translation thereof if the copy of the latest international work product is not in the English language.

(6) Applicant must submit a copy of the claims from the corresponding PCT application which were indicated as having novelty, inventive step and industrial applicability in the latest work product of the PCT application along with an English translation thereof and a statement that the English translation is accurate if the claims are not in the English language. Applicant is required to submit a claims correspondence table in English. The claims correspondence table must indicate how all the claims in the U.S. application sufficiently correspond to the claims indicated as having novelty, inventive step and industrial applicability in the latest international work product. *If the claims in the U.S. application for which participation in the PCT-PPH pilot program is requested are identical to the claims from the corresponding PCT application, and are in the English language, applicant may just indicate such in the PCT-PPH request and it will not be necessary for applicant to submit a copy of the claims from the corresponding PCT application.*

(7) Applicant must submit an information disclosure statement (IDS) listing the documents cited in the international work products (ISR, WOIISA, WOIIPEA, PER) of the PCT.

(8) The request for participation in the PCT-PPH pilot program and all the supporting documents must be submitted to the USPTO via EFS-Web and indexed with the following document description: "Petition to make special under PCT-Patent Pros Hwy. Any preliminary amendments and IDS submitted with the PCT-PPH documents must be separately indexed as a preliminary amendment and IDS, respectively.

The request to participate in the PCT-PPH program and petition comply with all the above requirements. Accordingly, the above-identified application has been accorded "special" status.

Telephone inquiries concerning this decision should be directed to Hassan Kizou at 571-272-3088

All other inquiries concerning the examination or status of the application is accessible in the PAIR system at http://www.uspto.gov/ebc/index.html.

The application is being forwarded to the examiner for action on the merits commensurate with this decision

/Hassan Kizou/

Hassan Kizou
SPE, Technology Center 2400

UNITED STATES PATENT AND TRADEMARK OFFICE

COMMISSIONER FOR PATENTS
UNITED STATES PATENT AND TRADEMARK OFFICE
P.O. BOX 1450
ALEXANDRIA, VA 22313-1450
www.uspto.gov

THE SMALL PATENT LAW GROUP LLP
225 S. MERAMEC
STE. 725T
ST. LOUIS MO 63105

MAILED

FEB 17 2011

OFFICE OF PETITIONS

In re Application of	:	DECISION ON PETITION
Putnam et al.	:	UNDER 37 CFR 1.78(a)(3)
Application No. 12/408,037	:	and
Filed: March 20, 2009	:	DECISION ON PETITION
Atty Docket No. IP-0049A-US	:	UNDER 37 CFR 1.78(a)(6)
(830-0049US2)	:	

This is a decision on the PETITION UNDER 37 C.F.R. §1.78 FOR UNINTENTIONALLY DELAYED CLAIM FOR PRIORITY, filed September 21, 2010, to accept unintentionally delayed claims to prior-filed applications 10/645,689, 60/410,541, and 60/546,435.

The petition is **GRANTED**.

A petition for acceptance of a claim for late priority under 37 CFR §§ 1.78(a)(3) and 37 CFR 1.78(a)(6) is only applicable to those applications filed on or after November 29, 2000. Further, the petition is appropriate only after the expiration of the period specified in 37 CFR §§ 1.78(a)(2)(ii) and 37 CFR 1.78(a)(5)(ii), respectively, and must be filed during the pendency of the nonprovisional application. In addition, the petition under 37 CFR § 1.78(a)(3) and 37 CFR § 1.78(a)(6), respectively, must be accompanied by:

(1) the reference required by 35 U.S.C. § 120 and 37 CFR § 1.78(a)(2)(i) 35 U.S.C. § 119(e) and 37 CFR 1.78(a)(5)(i), respectively, of the prior-filed application, unless previously submitted;
(2) the surcharge set forth in § 1.17(t); and
(3) a statement that the entire delay between the date the claim was due under 37 CFR §§ 1.78(a)(2)(ii) and 37 CFR 1.78(a)(5)(ii), respectively, and the date the claim was filed was unintentional. The Director may require

additional where there is a question whether the delay was unintentional.

The instant application was filed after November 29, 2000. A review of the application as filed reveals that the claims for priority set forth on petition were not submitted on filing in the first sentence of the specification or in an application data sheet. The four and sixteen-month periods specified in 37 CFR §§ 1.78(a)(2)(ii) and 37 CFR 1.78(a)(5)(ii) have expired. Thus, the instant petition is appropriate. In addition, the petition includes the required statement of unintentional delay. The required surcharge has been charged to the Deposit Account, as authorized.

On petition, a reference to the prior-filed nonprovisional and provisional applications has been included in an amendment, as required by 37 CFR 1.78(a)(2)(iii) and (a)(5)(iii). With respect to the applications so incorporated, the incorporation by reference statement included in the amendment was present on filing of the application.

With respect to 35 U.S.C. 120 and 37 CFR 1.78(a)(3), the amendment includes a reference to prior-filed application No. 10/645,689, with the appropriate relationship stated as continuation-in-part. On filing, this application claimed the benefit of priority of intermediate application No. 11/226,892, as a divisional thereof. By decision mailed July 2, 2010, an unintentionally delayed claim for priority from application No. 11/226,892 to application No. 10/645,689 (needed for the chain of continuity) was granted; specifically, thereby, application No. 11/226,892 claimed the benefit of priority as a continuation-in-part of application No. 10/645,689. Accordingly, in turn, and via the intermediate application, this application can now properly claim the benefit of application No. 10/645,689.

With respect to 35 U.S.C. 119(e) and 37 CFR 1.78(a)(6), this pending nonprovisional application was filed on March 20, 2009. The filing date of provisional application no. 60/410,541 for which priority is claimed is, September 12, 2002, which is within twelve months of intermediate application No. 10/645,689, filed August 20, 2003. The instant petition includes the benefit claim to application No. 10/645,689. Application No. 10/645,689 is now abandoned; however, as filed application No. 10/645,689

claimed the benefit of provisional application No. 60/410,541. Thus, the claim for benefit of priority under 35 U.S.C. § 119(e) of provisional application no. 60/410,541 was made in intermediate application no. 10/645,689 during the pendency of the application (before the application became abandoned).

The filing date of provisional application no. 60/546,435 for which priority is claimed is, February 19, 2004, which is within twelve months of intermediate application No. 11/063,660, filed August 20, 2003. The instant application as filed included a proper benefit claim to application No. 11/063,660, as a continuation-in-part thereof. The claim for benefit of priority under 35 U.S.C. § 119(e) of provisional application no. 60/546,435 was made in intermediate application no. 11/063,660 during the pendency of the application (before the application became abandoned).

Applicant has properly claimed the benefit of the provisional applications by claiming the benefit of an intermediate copending nonprovisional application. In other words, this application has properly claimed the benefit of the intermediate nonprovisional application under 35 U.S.C. 120; and the intermediate application was filed not later than 12 months after the filing date of the provisional application; and both this later-filed application and the intermediate application have claimed the benefit of the provisional application under 35 U.S.C. 119(e).
A review of the application history reveals that the provisional application filing fee was paid in all prior-filed provisional applications.

All of the above requirements having been satisfied, the late claim for benefit of priority to the prior-filed applications under 35 U.S.C. § 120 and 35 U.S.C. § 119(e) is accepted as being unintentionally delayed.

The granting of the petition to accept the delayed benefit claim to the prior-filed applications under 37 CFR §§ 1.78(a)(3) and (a)(6) should not be construed as meaning that this application is entitled to the benefit of the filing date of the prior-filed applications. In order for this application to be entitled to the benefit of the prior-filed application, all other requirements under 35 U.S.C. §§120 and 1.78(a)(1) and (a)(2) and §§119(e) and 1.78(a)(4) and (a)(5) must be met. Similarly, the fact that the corrected Filing Receipt accompanying this

decision on petition includes the prior-filed applications should not be construed as meaning that applicant is entitled to the claim for benefit of priority to the prior-filed applications noted thereon. Accordingly, the examiner will, in due course, consider this benefit claim and determine whether the application is entitled to the benefit of the earlier filing date.

A corrected Filing Receipt, which includes the priority claim to the prior-filed applications, accompanies this decision on petition.

Any questions concerning this matter may be directed to the undersigned at (571) 272-3219. All other inquiries concerning either the examination procedures or status of the application should be directed to the Technology Center.

This application is being referred to Technology Center Art Unit 1777 for consideration by the examiner of the claim for benefit of priority under 35 U.S.C. §§ 120 and 119(e) of the prior-filed applications as set forth in the amendment filed September 21, 2010.

Nancy Johnson
Senior Petitions Attorney
Office of Petitions

ATTACHMENT: Corrected Filing Receipt

UNITED STATES PATENT AND TRADEMARK OFFICE

UNITED STATES DEPARTMENT OF COMMERCE
United States Patent and Trademark Office
Address: COMMISSIONER FOR PATENTS
P.O. Box 1450
Alexandria, Virginia 22313-1450
www.uspto.gov

APPLICATION NUMBER	FILING or 371(c) DATE	GRP ART UNIT	FIL FEE REC'D	ATTY.DOCKET.NO	TOT CLAIMS	IND CLAIMS
12/408,037	03/20/2009	1777	1360	IP-0049A-US (830-0049US2)	20	1

CONFIRMATION NO. 8479

38790
THE SMALL PATENT LAW GROUP LLP
225 S. MERAMEC, STE. 725T
ST. LOUIS, MO 63105

CORRECTED FILING RECEIPT

OC000000045987531

Date Mailed: 02/14/2011

Receipt is acknowledged of this non-provisional patent application. The application will be taken up for examination in due course. Applicant will be notified as to the results of the examination. Any correspondence concerning the application must include the following identification information: the U.S. APPLICATION NUMBER, FILING DATE, NAME OF APPLICANT, and TITLE OF INVENTION. Fees transmitted by check or draft are subject to collection. Please verify the accuracy of the data presented on this receipt. **If an error is noted on this Filing Receipt, please submit a written request for a Filing Receipt Correction. Please provide a copy of this Filing Receipt with the changes noted thereon. If you received a "Notice to File Missing Parts" for this application, please submit any corrections to this Filing Receipt with your reply to the Notice. When the USPTO processes the reply to the Notice, the USPTO will generate another Filing Receipt incorporating the requested corrections**

Applicant(s)

MARTIN A. PUTNAM, CHESHIRE, CT;
RICHARD L. LEMOINE, SAN DIEGO, CA;

Assignment For Published Patent Application

ILLUMINA, INC., SAN DIEGO, CA

Power of Attorney: The patent practitioners associated with Customer Number 38790

Domestic Priority data as claimed by applicant

This application is a DIV of 11/226,892 09/13/2005
which claims benefit of 60/609,583 09/13/2004
and claims benefit of 60/610,910 09/17/2004
and claims benefit of 60/610,833 09/17/2004
and is a CIP of 10/661,836 09/12/2003 PAT 7,399,643
which is a CIP of 10/645,689 08/20/2003 ABN
which claims benefit of 60/410,541 09/12/2002
and said 11/226,892 09/13/2005
is a CIP of 11/063,665 02/22/2005 ABN
which claims benefit of 60/546,435 02/19/2004

Foreign Applications (You may be eligible to benefit from the **Patent Prosecution Highway** program at the USPTO. Please see http://www.uspto.gov for more information.)

If Required, Foreign Filing License Granted: 04/01/2009

The country code and number of your priority application, to be used for filing abroad under the Paris Convention, is **US 12/408,037**

Projected Publication Date: Not Applicable

Non-Publication Request: No

Early Publication Request: No

Title

METHOD AND APPARATUS FOR ALIGNING MICROBEADS IN ORDER TO INTERROGATE THE SAME

Preliminary Class

436

PROTECTING YOUR INVENTION OUTSIDE THE UNITED STATES

Since the rights granted by a U.S. patent extend only throughout the territory of the United States and have no effect in a foreign country, an inventor who wishes patent protection in another country must apply for a patent in a specific country or in regional patent offices. Applicants may wish to consider the filing of an international application under the Patent Cooperation Treaty (PCT). An international (PCT) application generally has the same effect as a regular national patent application in each PCT-member country. The PCT process **simplifies** the filing of patent applications on the same invention in member countries, but **does not result** in a grant of "an international patent" and does not eliminate the need of applicants to file additional documents and fees in countries where patent protection is desired.

Almost every country has its own patent law, and a person desiring a patent in a particular country must make an application for patent in that country in accordance with its particular laws. Since the laws of many countries differ in various respects from the patent law of the United States, applicants are advised to seek guidance from specific foreign countries to ensure that patent rights are not lost prematurely.

Applicants also are advised that in the case of inventions made in the United States, the Director of the USPTO must issue a license before applicants can apply for a patent in a foreign country. The filing of a U.S. patent application serves as a request for a foreign filing license. The application's filing receipt contains further information and guidance as to the status of applicant's license for foreign filing.

Applicants may wish to consult the USPTO booklet, "General Information Concerning Patents" (specifically, the section entitled "Treaties and Foreign Patents") for more information on timeframes and deadlines for filing foreign patent applications. The guide is available either by contacting the USPTO Contact Center at 800-786-9199, or it can be viewed on the USPTO website at http://www.uspto.gov/web/offices/pac/doc/general/index.html.

For information on preventing theft of your intellectual property (patents, trademarks and copyrights), you may wish to consult the U.S. Government website, http://www.stopfakes.gov. Part of a Department of Commerce initiative, this website includes self-help "toolkits" giving innovators guidance on how to protect intellectual property in specific countries such as China, Korea and Mexico. For questions regarding patent enforcement issues, applicants may call the U.S. Government hotline at 1-866-999-HALT (1-866-999-4158).

LICENSE FOR FOREIGN FILING UNDER

Title 35, United States Code, Section 184

Title 37, Code of Federal Regulations, 5.11 & 5.15

GRANTED

The applicant has been granted a license under 35 U.S.C. 184, if the phrase "IF REQUIRED, FOREIGN FILING LICENSE GRANTED" followed by a date appears on this form. Such licenses are issued in all applications where the conditions for issuance of a license have been met, regardless of whether or not a license may be required as set forth in 37 CFR 5.15. The scope and limitations of this license are set forth in 37 CFR 5.15(a) unless an earlier license has been issued under 37 CFR 5.15(b). The license is subject to revocation upon written notification. The date indicated is the effective date of the license, unless an earlier license of similar scope has been granted under 37 CFR 5.13 or 5.14.

This license is to be retained by the licensee and may be used at any time on or after the effective date thereof unless it is revoked. This license is automatically transferred to any related applications(s) filed under 37 CFR 1.53(d). This license is not retroactive.

The grant of a license does not in any way lessen the responsibility of a licensee for the security of the subject matter as imposed by any Government contract or the provisions of existing laws relating to espionage and the national security or the export of technical data. Licensees should apprise themselves of current regulations especially with respect to certain countries, of other agencies, particularly the Office of Defense Trade Controls, Department of State (with respect to Arms, Munitions and Implements of War (22 CFR 121-128)); the Bureau of Industry and Security, Department of Commerce (15 CFR parts 730-774); the Office of Foreign AssetsControl, Department of Treasury (31 CFR Parts 500+) and the Department of Energy.

NOT GRANTED

No license under 35 U.S.C. 184 has been granted at this time, if the phrase "IF REQUIRED, FOREIGN FILING LICENSE GRANTED" DOES NOT appear on this form. Applicant may still petition for a license under 37 CFR 5.12, if a license is desired before the expiration of 6 months from the filing date of the application. If 6 months has lapsed from the filing date of this application and the licensee has not received any indication of a secrecy order under 35 U.S.C. 181, the licensee may foreign file the application pursuant to 37 CFR 5.15(b).

UNITED STATES PATENT AND TRADEMARK OFFICE

Commissioner for Patents
United States Patent and Trademark Office
P.O. Box 1450
Alexandria, VA 22313-1450
www.uspto.gov

FISH & RICHARDSON P.C. (BO)
P.O. BOX 1022
MINNEAPOLIS MN 55440-1022

MAILED

NOV 09 2011

OFFICE OF PETITIONS

In re Application of
Zhu et al.
Application No. 12/408,058
Filed: March 20, 2009
Attorney Docket No. 14131-0078001
/M0045UTL

DECISION ON PETITION

This is a decision on the petition under 37 CFR 1.182, filed October 25, 2011, to change the order of the names of the inventors.

The petition is **GRANTED**.

Office records have been corrected to reflect the change in the order of the named inventors. A corrected Filing Receipt, which sets forth the desired order of the named inventors, accompanies this decision on petition.

As authorized, the $400 fee for the petition under 37 CFR 1.182 has been assessed to petitioner's deposit account.

This application is being referred to Technology Center AU 1641 for examination in due course.

Telephone inquiries regarding this decision should be directed to the undersigned at (571) 272-3206.

/Liana Walsh/
Liana Walsh
Petitions Examiner
Office of Petitions

ATTACHMENT: Corrected Filing Receipt

UNITED STATES PATENT AND TRADEMARK OFFICE

UNITED STATES DEPARTMENT OF COMMERCE
United States Patent and Trademark Office
Address: COMMISSIONER FOR PATENTS
P.O. Box 1450
Alexandria, Virginia 22313-1450
www.uspto.gov

APPLICATION NUMBER	FILING or 371(c) DATE	GRP ART UNIT	FIL FEE REC'D	ATTY.DOCKET.NO	TOT CLAIMS	IND CLAIMS
12/408,058	03/20/2009	1641	3948	14131-0078001 / M0045UTL	49	8

CONFIRMATION NO. 8511

CORRECTED FILING RECEIPT

26161
FISH & RICHARDSON P.C. (BO)
P.O. BOX 1022
MINNEAPOLIS, MN 55440-1022

OC000000050875050

Date Mailed: 11/09/2011

Receipt is acknowledged of this non-provisional patent application. The application will be taken up for examination in due course. Applicant will be notified as to the results of the examination. Any correspondence concerning the application must include the following identification information: the U.S. APPLICATION NUMBER, FILING DATE, NAME OF APPLICANT, and TITLE OF INVENTION. Fees transmitted by check or draft are subject to collection. Please verify the accuracy of the data presented on this receipt. **If an error is noted on this Filing Receipt, please submit a written request for a Filing Receipt Correction. Please provide a copy of this Filing Receipt with the changes noted thereon. If you received a "Notice to File Missing Parts" for this application, please submit any corrections to this Filing Receipt with your reply to the Notice. When the USPTO processes the reply to the Notice, the USPTO will generate another Filing Receipt incorporating the requested corrections**

Applicant(s)

Xiangping Zhu, North Grafton, MA;
Zachary Shriver, Cambridge, MA;
Yanjie Jiang, Acton, MA;
Corinne Bauer, Sudbury, MA;
James Eric Anderson, Hudson, MA;
Peter James Ahern, Winchester, MA;

Assignment For Published Patent Application

Momenta Pharmaceutical, Inc.

Power of Attorney:

John Freeman--29066
Timothy French--30175
Anita Meiklejohn--35283
John Hayden--37640

Domestic Priority data as claimed by applicant

This appln claims benefit of 61/045,465 04/16/2008

Foreign Applications (You may be eligible to benefit from the **Patent Prosecution Highway** program at the USPTO. Please see http://www.uspto.gov for more information.)

If Required, Foreign Filing License Granted: 03/31/2009

The country code and number of your priority application, to be used for filing abroad under the Paris Convention, is **US 12/408,058**

Projected Publication Date: Not Applicable

Non-Publication Request: No

Early Publication Request: No

Title

ANALYSIS OF AMINO ACID COPOLYMER COMPOSITIONS

Preliminary Class

514

PROTECTING YOUR INVENTION OUTSIDE THE UNITED STATES

Since the rights granted by a U.S. patent extend only throughout the territory of the United States and have no effect in a foreign country, an inventor who wishes patent protection in another country must apply for a patent in a specific country or in regional patent offices. Applicants may wish to consider the filing of an international application under the Patent Cooperation Treaty (PCT). An international (PCT) application generally has the same effect as a regular national patent application in each PCT-member country. The PCT process **simplifies** the filing of patent applications on the same invention in member countries, but **does not result** in a grant of "an international patent" and does not eliminate the need of applicants to file additional documents and fees in countries where patent protection is desired.

Almost every country has its own patent law, and a person desiring a patent in a particular country must make an application for patent in that country in accordance with its particular laws. Since the laws of many countries differ in various respects from the patent law of the United States, applicants are advised to seek guidance from specific foreign countries to ensure that patent rights are not lost prematurely.

Applicants also are advised that in the case of inventions made in the United States, the Director of the USPTO must issue a license before applicants can apply for a patent in a foreign country. The filing of a U.S. patent application serves as a request for a foreign filing license. The application's filing receipt contains further information and guidance as to the status of applicant's license for foreign filing.

Applicants may wish to consult the USPTO booklet, "General Information Concerning Patents" (specifically, the section entitled "Treaties and Foreign Patents") for more information on timeframes and deadlines for filing foreign patent applications. The guide is available either by contacting the USPTO Contact Center at 800-786-9199, or it can be viewed on the USPTO website at http://www.uspto.gov/web/offices/pac/doc/general/index.html.

For information on preventing theft of your intellectual property (patents, trademarks and copyrights), you may wish to consult the U.S. Government website, http://www.stopfakes.gov. Part of a Department of Commerce initiative, this website includes self-help "toolkits" giving innovators guidance on how to protect intellectual property in specific countries such as China, Korea and Mexico. For questions regarding patent enforcement issues, applicants may call the U.S. Government hotline at 1-866-999-HALT (1-866-999-4158).

LICENSE FOR FOREIGN FILING UNDER

Title 35, United States Code, Section 184

Title 37, Code of Federal Regulations, 5.11 & 5.15

GRANTED

The applicant has been granted a license under 35 U.S.C. 184, if the phrase "IF REQUIRED, FOREIGN FILING LICENSE GRANTED" followed by a date appears on this form. Such licenses are issued in all applications where the conditions for issuance of a license have been met, regardless of whether or not a license may be required as set forth in 37 CFR 5.15. The scope and limitations of this license are set forth in 37 CFR 5.15(a) unless an earlier license has been issued under 37 CFR 5.15(b). The license is subject to revocation upon written notification. The date indicated is the effective date of the license, unless an earlier license of similar scope has been granted under 37 CFR 5.13 or 5.14.

This license is to be retained by the licensee and may be used at any time on or after the effective date thereof unless it is revoked. This license is automatically transferred to any related applications(s) filed under 37 CFR 1.53(d). This license is not retroactive.

The grant of a license does not in any way lessen the responsibility of a licensee for the security of the subject matter as imposed by any Government contract or the provisions of existing laws relating to espionage and the national security or the export of technical data. Licensees should apprise themselves of current regulations especially with respect to certain countries, of other agencies, particularly the Office of Defense Trade Controls, Department of State (with respect to Arms, Munitions and Implements of War (22 CFR 121-128)); the Bureau of Industry and Security, Department of Commerce (15 CFR parts 730-774); the Office of Foreign AssetsControl, Department of Treasury (31 CFR Parts 500+) and the Department of Energy.

NOT GRANTED

No license under 35 U.S.C. 184 has been granted at this time, if the phrase "IF REQUIRED, FOREIGN FILING LICENSE GRANTED" DOES NOT appear on this form. Applicant may still petition for a license under 37 CFR 5.12, if a license is desired before the expiration of 6 months from the filing date of the application. If 6 months has lapsed from the filing date of this application and the licensee has not received any indication of a secrecy order under 35 U.S.C. 181, the licensee may foreign file the application pursuant to 37 CFR 5.15(b).

SelectUSA

The United States represents the largest, most dynamic marketplace in the world; an unparalleled location for innovation and commercialization of new technologies. Through SelectUSA, our nation works to encourage, facilitate, and accelerate business investment. Go to www.SelectUSA.gov for more information. Whether you choose to visit www.SelectUSA.gov will have no effect on the examination of your patent application.

UNITED STATES PATENT AND TRADEMARK OFFICE

Commissioner for Patents
United States Patent and Trademark Office
P.O. Box 1450
Alexandria, VA 22313-1450
www.uspto.gov

MAILED

MAR 16 2012

OFFICE OF PETITIONS

THOMAS, KAYDEN,
HORSTEMEYER & RISLEY, LLP
400 INTERSTATE NORTH
PARKWAY SE
SUITE 1500
ATLANTA GA 30339

In re Application of

Battenfeld, et al. :

Application No. 12/408,069

: DECISION ON PETITION

Filed: March 20, 2009

:

Attorney Docket No. **051812-1830**

This is a decision on the petition under 37 CFR §1.137(b), February 16, 2012, to revive the above-identified application.

The petition is **granted**.

This application became abandoned for failure to timely file corrected drawings as required by the Notice of Allowability (the "Notice") mailed October 28, 2011. The Notice set forth a three (3) month statutory period for reply. No response was received within the allowable period. Accordingly, this application became abandoned on January 29, 2011. A Notice of Abandonment was mailed on February 14, 2012.

Corrected drawings were received on February 16, 2012.

The application is being forwarded to the Office of Data Management for further processing.

Telephone inquiries concerning this matter may be directed to the undersigned at (571) 272-3222.

/Kenya A. McLaughlin/

Kenya A. McLaughlin
Petitions Attorney
Office of Petitions

UNITED STATES PATENT AND TRADEMARK OFFICE

Commissioner for Patents
United States Patent and Trademark Office
P.O. Box 1450
Alexandria, VA 22313-1450
www.uspto.gov

AKA CHAN LLP / ORACLE
900 LAFAYETTE STREET
SUITE 710
SANTA CLARA CA 95050

MAILED

JAN 12 2011

OFFICE OF PETITIONS

In re Application of :
LI, Wenhua et al. :
Application No. 12/408,073 : DECISION ON PETITION
Filed: March 20, 2009 : TO WITHDRAW
Attorney Docket No. **ORACP048** : FROM RECORD
:

This is a decision on the Request to Withdraw as attorney or agent of record under 37 C.F.R. § 1.36(b), filed December 24, 2010.

The request is **NOT APPROVED**.

The Office has revised its change in procedure for request to withdraw from representation applies to requests filed on or after May 12, 2008.

The Office will no longer accept address changes to a new practitioner or law firm filed with a Request, absent the filing of a power of attorney to the new representative. The Office will either change the correspondence address of record to the most current address information provided for the assignee of the entire interest who properly became of record under 37 CFR 3.71 or, if no assignee of the entire interest has properly been made of record under 37 CFR 3.71, the most current address information provided for the first named inventor.

Accordingly, the request to withdraw from record cannot be approved because the request to change the correspondence address is not that of: (1) the first named inventor; or (2) an assignee of the entire interest under 37 C.F.R 3.71 who has properly intervened.

If an assignee has intervened in this application, then a Statement under 37 CFR 3.73(b) or a copy of the actual assignment must be submitted with a renewed request.

All future communications from the Office will continue to be directed to the above-listed address until otherwise notified by applicant.

Telephone inquiries concerning this decision should be directed to Tredelle Jackson at 571-272-2783.

/Tredelle D. Jackson/
Paralegal Specialist
Office of Petitions

cc: **SILICON VALLEY PATENT GROUP LLP**
ATTN: OMKAR - ORACLE
18805 COX AVENUE
SUITE 220
SARATOGA, CA 95070

UNITED STATES PATENT AND TRADEMARK OFFICE

UNITED STATES DEPARTMENT OF COMMERCE
United States Patent and Trademark Office
Address: COMMISSIONER FOR PATENTS
P.O. Box 1450
Alexandria, Virginia 22313-1450
www.uspto.gov

Smart & Biggar
P.O.Box 2999, Station D
900-55 Metcalfe Street
Ottawa, ON K1P 5Y6
CANADA

Mail Date: 08/05/2010

Applicant	: Gerhard Dietrich Klassen	: DECISION ON REQUEST FOR
Patent Number	: 7657272	: RECALCULATION of PATENT
Issue Date	: 02/02/2010	: TERM ADJUSTMENT IN VIEW
Application No	: 12/408,092	: OF WYETH AND NOTICE OF INTENT TO
Filed	: 03/20/2009	: ISSUE CERTIFICATE OF CORRECTION
		:

The Request for Recalculation is **GRANTED** to the extent indicated.

The patent term adjustment has been determined to be **0** days. The USPTO will *sua sponte* issue a certificate of correction reflecting the amount of PTA days determined by the recalculation.

Prior to the issuance of the certificate of correction, the USPTO will afford patentee an opportunity to be heard and request reconsideration. Accordingly, patentee has **one month or thirty (30) days**, whichever is longer, to file a request for reconsideration of this patent term adjustment calculation. See 35 U.S.C. 154(b)(3)(B)(ii) and 37 CFR 1.322(a)(4). No extensions of time will be granted under 37 CFR 1.136.

Patentee should use document code PET.OP if electronically filing a request for reconsideration of this patent term adjustment calculation. The patentee must also include the information required by 37 CFR 1.705(b)(2) and the fee required by 37 CFR 1.18(e). If patentee does not file a timely request for reconsideration of this patent term adjustment calculation including the information required by 37 CFR 1.705(b)(2) and the fee required by 37 CFR 1.18(e), the USPTO will issue a certificate of correction reflecting the PTA determination noted above.

Patentee should be aware that in order to preserve the right to review in the United States District Court for the District of Columbia of the USPTO patent term adjustment determination, patentee must ensure that he or she also take the steps required under 35 U.S.C. 154(b)(4)(A) in a timely manner. Nothing in the request for recalculation should be construed as providing an alternative time frame for commencing a civil action under 35 U.S.C. 154(b)(4)(A).

Any questions concerning this decision should be directed to the Office of Patent Legal Administration at 571-272-7702.

UNITED STATES PATENT AND TRADEMARK OFFICE

Commissioner for Patents
United States Patent and Trademark Office
P.O. Box 1450
Alexandria, VA 22313-1450
www.uspto.gov

DICKE BILLIG & CZAJA
FIFTH STREET TOWERS
100 SOUTH FIFTH STREET, SUITE 2250
MINNEAPOLIS, MN 55402

MAILED

JUN 14 2011

OFFICE OF PETITIONS

In re Application of :
Ralf Otremba et al :
Application No. 12/408,162 : ON PETITION
Filed: March 20, 2009 :
Attorney Docket No.
I431.214.102/FIN925USDIV1

This is a decision on the petition, filed June 9, 2011 under 37 CFR 1.313(c)(2) to withdraw the above-identified application from issue after payment of the issue fee.

The petition is **GRANTED**.

The above-identified application is withdrawn from issue for consideration of a submission under 37 CFR 1.114 (request for continued examination). See 37 CFR 1.313(c)(2).

Petitioner is advised that the issue fee paid on May 9, 2011 in the above-identified application cannot be refunded. If, however, the above-identified application is again allowed, petitioner may request that it be applied towards the issue fee required by the new Notice of Allowance.[1]

Telephone inquiries should be directed to Irvin Dingle at (571) 272-3210.

This matter is being referred to Technology Center AU 2822 for processing of the request for continued examination under 37 CFR 1.114 and for consideration of the concurrently filed Information Disclosure Statement.

/Irvin Dingle/
Irvin Dingle
Petitions Examiner
Office of Petitions

---

[1] The request to apply the issue fee to the new Notice may be satisfied by completing and returning the new Issue Fee Transmittal Form PTOL-85(b), which includes the following language thereon: Commissioner for Patents is requested to apply the Issue Fee and Publication Fee (if any) or re-apply any previously paid issue fee to the application identified above. Petitioner is advised that, whether a fee is indicated as being due or not, the Issue Fee Transmittal Form **must** be completed and timely submitted to avoid abandonment. Note the language in bold text on the first page of the Notice of Allowance and Fee(s) Due (PTOL-85).

UNITED STATES PATENT AND TRADEMARK OFFICE

UNITED STATES DEPARTMENT OF COMMERCE
United States Patent and Trademark Office
Address: COMMISSIONER FOR PATENTS
P.O. Box 1450
Alexandria, Virginia 22313-1450
www.uspto.gov

APPLICATION NO.	FILING DATE	FIRST NAMED INVENTOR	ATTORNEY DOCKET NO.	CONFIRMATION NO.
12/408,183	03/20/2009	Takashi MAEDA	340100US2	8772

22850 7590 12/16/2011

OBLON, SPIVAK, MCCLELLAND MAIER & NEUSTADT, L.L.P.
1940 DUKE STREET
ALEXANDRIA, VA 22314

EXAMINER	
CHAN, CANDICE	
ART UNIT	PAPER NUMBER
2813	

NOTIFICATION DATE	DELIVERY MODE
12/16/2011	ELECTRONIC

Please find below and/or attached an Office communication concerning this application or proceeding.

The time period for reply, if any, is set in the attached communication.

Notice of the Office communication was sent electronically on above-indicated "Notification Date" to the following e-mail address(es):

patentdocket@oblon.com
oblonpat@oblon.com
jgardner@oblon.com

UNITED STATES PATENT AND TRADEMARK OFFICE

COMMISSIONER FOR PATENTS
UNITED STATES PATENT AND TRADEMARK OFFICE
WASHINGTON, D.C. 20231
www.uspto.gov

Paper No. 20111116

OBLON, SPIVAK, MCCLELLAND, MAIER & NEUSTADT, L.L.P
1940 Duke Street
Alexandria, VA 22314

Applicant: MAEDA, TAKASHI et al.
Appl No.: 12/408183
Filed: March 20, 2009

DECISION ON PETITION UNDER *37 CFR 1.181*

This decision is in response to the petition filed October 25, 2011 in the above-identified application. Petitioner requests the Commissioner to invoke his supervisory authority under 37 C.F.R. § 1.181 (a)(3) to compel the Examiner to consider the Documents (AO) - (AQ) cited in the Information Disclosure Statement (IDS) filed on October 13, 2010. The petition is before the Supervisory Patent Examiner for review.

The Petitioner asserts the IDS filed October 13, 2010 is in compliance with 37 C.F.R § 1.97-1.98 since it was timely submitted with a showing of relevancy comprising a copy of the Japanese Office Action with English translation and a copy of Documents (AO) – (AQ) which was cited in the Japanese Office Action as showing prior art.

Upon review, the IDS filed October 13, 2010 is not in conformance with the requirements of 37 C.F.R. § 1.97-1.98 since it lacks a concise explanation of the relevance of Documents (AO) – (AQ). MPEP 609.04(a) (III) states:

> *"Where the information listed is not in the English language, but was cited in a search report or other action by a foreign patent office in a counterpart foreign application, the requirement for a concise explanation of relevance can be satisfied by submitting an English-language version of the search report or action* ***which indicates the degree of relevance found by the foreign office.*** *This may be an explanation of which portion of the reference is particularly relevant, to which claims it applies, or merely an "X", "Y", or "A" indication on a search report".* (emphasis added)

The Japanese Office Action does not "indicate the degree of relevance found by the foreign office" as required by the MPEP. The documents were not cited as part of a prior art rejection, and no explanation was provided in the Action as to why those references were cited. Therefore, the relevance of Documents (AO) – (AQ) cannot be determined based on the Japanese Office Action alone. Since Applicant has provided no English Abstract or a separate statement of relevance, those documents cannot be considered.

As the information Disclosure Statement is not in compliance with 37 C.F.R. § 1.97-1.98, the petition is hereby **DENIED**.

Telephone inquiries should be directed to Matthew Landau, Supervisory Patent Examiner, at (571)-272-1731.

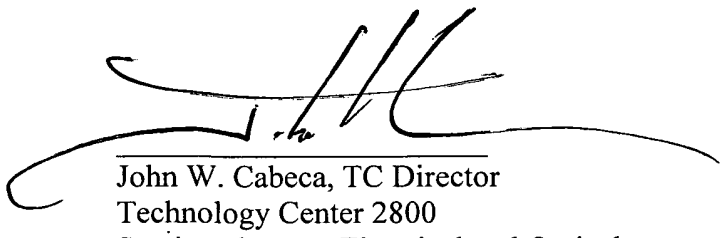

John W. Cabeca, TC Director
Technology Center 2800
Semiconductors, Electrical and Optical
Systems and Components

UNITED STATES PATENT AND TRADEMARK OFFICE

UNITED STATES DEPARTMENT OF COMMERCE
United States Patent and Trademark Office
Address: COMMISSIONER FOR PATENTS
P.O. Box 1450
Alexandria, Virginia 22313-1450
www.uspto.gov

APPLICATION NO.	FILING DATE	FIRST NAMED INVENTOR	ATTORNEY DOCKET NO.	CONFIRMATION NO.
12/408,184	03/20/2009	RINTARO NOMURA	J-09-0201	8775

7590 12/10/2010

Mr. Jackson Chen
6535 N. STATE HWY 161
IRVING, TX 75039

EXAMINER	
VANDERPUYE, KENNETH N	

ART UNIT	PAPER NUMBER
2613	

NOTIFICATION DATE	DELIVERY MODE
12/10/2010	ELECTRONIC

DECISION GRANTING PETITION UNDER 37 CFR 1.138(d)

The declaration of express abandonment is recognized

This is in response to the petition under 37 CFR 1.138(d), requesting for a refund of any previously paid search fee and excess claims fee in the above-identified application.

The petition is granted.

The express abandonment is recognized. Any previously paid search fee and excess claims fee are hereby refunded.

Telephone inquiries should be directed to the Office of Data Management at (571) 272-4200.

Patent Publication Branch
Office of Data Management

Adjustment date: 12/10/2010 -340.00 OP

UNITED STATES PATENT AND TRADEMARK OFFICE

Commissioner for Patents
United States Patent and Trademark Office
P.O. Box 1450
Alexandria, VA 22313-1450
www.uspto.gov

MAILED

MAR 21 2012

OFFICE OF PETITIONS

GREER, BURNS & CRAIN
300 S WACKER DR
25TH FLOOR
CHICAGO IL 60606

In re Application of
Kriegmair, et al.
Application No. 12/408,210
Filed: March 20, 2009
Atty. Dkt. No.: 4669.83701

: DECISION ON PETITION

This decision is in response to the petition under 37 CFR 1.137(b), filed February 28, 2012.

The petition is **GRANTED**.

The application became abandoned November 26, 2011 for failure to timely submit a proper reply to the non-final Office action mailed August 25, 2011. This decision precedes Notice of Abandonment.

A grantable petition pursuant to 37 C.F.R. § 1.137(b) must be accompanied by: (1) the required reply to the outstanding Office action or notice, unless previously filed; (2) the petition fee as set forth in 37 C.F.R. § 1.17(m); (3) a statement that the entire delay in filing the required reply from the due date for the reply until the filing of a grantable petition pursuant to 37 C.F.R. § 1.137(b) was unintentional; and (4) any terminal disclaimer (and fee set forth in 37 C.F.R. § 1.20(d)) required pursuant to 37 C.F.R. § 1.137(c).

The instant petition has been carefully reviewed and found in compliance with the requirements set forth above.

This application is being forwarded to Group Art Unit 2857 for further processing.

Telephone inquiries concerning this decision should be directed to the undersigned at (571) 272-3205.

/ALESIA M. BROWN/

Alesia M. Brown
Attorney Advisor
Office of Petitions

UNITED STATES PATENT AND TRADEMARK OFFICE

Commissioner for Patents
United States Patent and Trademark Office
P.O. Box 1450
Alexandria, VA 22313-1450
www.uspto.gov

Paper No.

MERCHANT & GOULD PC
P.O. BOX 2903
MINNEAPOLIS MN 55402-0903

MAILED
DEC 19 2011
OFFICE OF PETITIONS

In re Patent No. 7,974,319 :
Deladurantaye et al. :
Issue Date: July 5, 2011 :
Application No. 12/408,215 : NOTICE REGARDING DEFICIENCY
Filed: March 20, 2009 :
Atty Docket No. 09680.0520USU1 :

This is a notice regarding your letter received June 1, 2011, notifying the Office of loss of entitlement to small entity status and requesting acceptance of a fee deficiency submission as provided for in 37 CFR 1.28.

The Office no longer investigates or rejects original or reissue applications under 37 CFR 1.56. 1098 Off. Gaz. Pat. Office 502 (January 3, 1989). Therefore, nothing in this Notice is intended to imply that an investigation was done.

The instant request included an itemization and payment of $755 for the deficiency in payment of fees.

Your fee deficiency submission under 37 CFR 1.28 is hereby **ACCEPTED**.

Payment of the deficiency has been treated under § 1.27(g)(2) as a notification of a loss of entitlement to small entity status.

Telephone inquiries related to this decision should be directed to the undersigned at 571-272-3219.

Nancy Johnson
Senior Petitions Attorney
Office of Petitions

UNITED STATES PATENT AND TRADEMARK OFFICE

Commissioner for Patents
United States Patent and Trademark Office
P.O. Box 1450
Alexandria, VA 22313-1450
www.uspto.gov

Jon P. Christensen
Husch Blackwell Sanders LLP
Welsh & Katz
120 South Riverside Plaza, 22nd Floor
Chicago IL 60606-3912

MAILED

APR 16 2012

OFFICE OF PETITIONS

In re Application of

:

Sadler, et al.

:

Application No. 12/408,225

: DECISION ON PETITION

Filed: March 20, 2009

Attorney Docket No. 4 **4426-105653**

This is a decision on the petition under 37 CFR 1.137(b), filed March 21, 2012, to revive the above-identified application.

The petition is **GRANTED**.

The above-identified application became abandoned for failure to file a proper response to the final Office action mailed September 15, 2011, which set a shortened statutory period for reply of three months from its mailing date. No response was received within the allowed period. The application became abandoned on December 16, 2011. A Notice of Abandonment was mailed March 22, 2012.

The Request for Continued Examination filed March 21, 2012, is noted.

The application file is being forwarded to Technology Center GAU 3686 for further processing.

Telephone inquiries concerning this decision should be directed to the undersigned at (571) 272-3222.

/Kenya A. McLaughlin/

Kenya A. McLaughlin
Petitions Attorney
Office of Petitions

UNITED STATES PATENT AND TRADEMARK OFFICE

Commissioner for Patents
United States Patent and Trademark Office
P.O. Box 1450
Alexandria, VA 22313-1450
www.uspto.gov

TAROLLI, SUNDHEIM, COVELL & TUMMINO LLP
1300 East Ninth Street, Suite 1700
Cleveland, OH 44114

MAILED

NOV 01 2010

OFFICE OF PETITIONS

In re Application of	:	
James M. Huff, et al.	:	
Application No. 12/408,301	:	DECISION ON PETITION
Filed: March 20, 2009	:	TO WITHDRAW
Attorney Docket No. CDO-018835 US PRI	:	FROM RECORD
	:	

This is a decision on the Request to Withdraw as attorney or agent of record under 37 C.F.R. § 1.36(b), filed October 7, 2010.

The request is **NOT APPROVED** because it is moot.

A review of the file record indicates that the power of attorney to Tarolli, Sundheim, Covell & Tummino LLP has been revoked by the assignee of the patent application on October 26, 2010. Accordingly, the request to withdraw under 37 C.F.R. § 1.36(b) is moot.

All future communications from the Office will continue to be directed to the below-listed address until otherwise notified by applicant.

Telephone inquires concerning this decision should be directed to Terri Johnson at 571-272-2991.

/Terri Johnson/
Terri Johnson
Petitions Examiner
Office of Petitions

cc: **THOMAS E. LEES, LLC**
67 Rhoads Center Drive
Dayton OH 45458

UNITED STATES PATENT AND TRADEMARK OFFICE

Commissioner for Patents
United States Patent and Trademark Office
P.O. Box 1450
Alexandria, VA 22313-1450
www.uspto.gov

J. GORDON THOMSON
P.O. BOX 8865
VICTORIA BC V8V 3Z1 CA CANADA

MAILED

SEP 26 2011

OFFICE OF PETITIONS

In re Application of	:	
McDonald, Greg	:	DECISION ON PETITION
Application No. 12/408,325	:	TO WITHDRAW
Filed: March 20, 2009	:	FROM RECORD
Attorney Docket No. SSK-01-09-US	:	

This is a decision on the Request to Withdraw as attorney or agent under 37 C.F.R. § 1.36(b) or 37 C.F.R. § 10.40 filed September 5, 2011.

The request is **DISMISSED**.

A review of the file record indicates that the attorneys/agents associated with Customer Number 42812: (1) do not have power of attorney in this patent application; but (2) have been employed or otherwise engaged in the proceedings in this patent application. The Office will no longer approve requests from practitioners to withdraw from applications where the requesting practitioner was never given power of attorney but is acting, or has acted, in a representative capacity pursuant to 37 CFR 1.34. In these situations, the practitioner is responsible for the correspondence the practitioner files in the application while acting in a representative capacity. As such, there is no need for the practitioner to obtain the Office's permission to withdraw from representation.

The change of correspondence address as listed in the Request to Withdraw cannot be accepted because it was not signed by an attorney of record. See MPEP §§ 601.03 and 405. A courtesy copy of this decision is being mailed to the address given on the petition; however, the Office will continue to mail all future correspondence solely to the address of record until otherwise properly notified by the applicant.

There is an outstanding Office action mailed April 28, 2011 that requires a reply.

Telephone inquires concerning this decision should be directed to the undersigned at 571-272-3206.

/Liana Walsh/
Liana Walsh
Petitions Examiner
Office of Petitions

cc: SSK VIRTUALIMAGE CORPORATION
ATTN. SAL KHAN
6546 PRINCIOTTA STREET
OTTAWA, ONTARIO K4P1G1
CANADA

UNITED STATES PATENT AND TRADEMARK OFFICE

Commissioner for Patents
United States Patent and Trademark Office
P.O. Box 1450
Alexandria, VA 22313-1450
www.uspto.gov

MOSER IP LAW GROUP/ANSELL LIMITED
1030 BROAD STREET, SUITE 203
SHREWSBURY, NJ 07702

MAILED

NOV 08 2010

OFFICE OF PETITIONS

In re Application of :
Noorman Bin Abu Hassan et al :
Application No. 12/408,336 : DECISION ON PETITION
Filed: March 20, 2009 : TO WITHDRAW
Attorney Docket No. ANS0002-02-CP : FROM RECORD
:

This is a decision on the Request to Withdraw as attorney or agent under 37 C.F.R. § 1.36(b) or 37 C.F.R. § 10.40 filed September 30, 2010.

The request is **APPROVED**.

A review of the file record indicates that Karen M. Whitney: (1) does not have power of attorney in this patent application; and (2) has been employed or otherwise engaged in the proceedings in this patent application. In view of the present decision, Karen M. Whitney has been withdrawn from the present application and may not prepare or submit papers under 37 C.F.R. § 1.34, or correspond in any manner in this application unless appointed in an acceptable power of attorney under 37 C.F.R. § 1.32(b).

Telephone inquires concerning this decision should be directed to Irvin Dingle at 571-272-3210.

Irvin Dingle
Petitions Examiner
Office of Petitions

cc: Karen M. Whitney
33 Wood Ave South, Second Floor, Suite 210
Iselin, NJ 08830

UNITED STATES PATENT AND TRADEMARK OFFICE

UNITED STATES DEPARTMENT OF COMMERCE
United States Patent and Trademark Office
Address: COMMISSIONER FOR PATENTS
P.O. Box 1450
Alexandria, Virginia 22313-1450
www.uspto.gov

APPLICATION NO.	FILING DATE	FIRST NAMED INVENTOR	ATTORNEY DOCKET NO.	CONFIRMATION NO.
12/408,433	03/20/2009	Somchai Ovutthitham	24165071-000001	9338

7590 01/31/2011

BAKER & MCKENZIE LLP
Pennzoil Place, South Tower
711 Louisiana, Suite 3400
Houston, TX 77002

EXAMINER	
HSU, TSUEY-CHEN	

ART UNIT	PAPER NUMBER
4142	

NOTIFICATION DATE	DELIVERY MODE
01/31/2011	ELECTRONIC

DECISION GRANTING PETITION UNDER 37 CFR 1.138(d)

The declaration of express abandonment is recognized

This is in response to the petition under 37 CFR 1.138(d), requesting for a refund of any previously paid search fee and excess claims fee in the above-identified application.

The petition is granted.

The express abandonment is recognized. Any previously paid search fee and excess claims fee are hereby refunded.

Telephone inquiries should be directed to the Office of Data Management at (571) 272-4200.

Patent Publication Branch
Office of Data Management

Adjustment date: 02/02/2011 [illegible]
02 FC:2111 -270.00 CP

UNITED STATES PATENT AND TRADEMARK OFFICE

Commissioner for Patents
United States Patent and Trademark Office
P.O. Box 1450
Alexandria, VA 22313-1450
www.uspto.gov

KILPATRICK TOWNSEND & STOCKTON LLP
TWO EMBARCADERO CENTER
EIGHTH FLOOR
SAN FRANCISCO, CA 94111-3834

MAILED

MAY 23 2011

OFFICE OF PETITIONS

In re Application of	:	
HOWARD, Robert et al.	:	
Application No. 12/408,439	:	DECISION ON PETITION
Filed: March 20, 2009	:	TO WITHDRAW
Attorney Docket No. **022176-004600US**	:	FROM RECORD
	:	

This is a decision on the Request to Withdraw as attorney or agent of record under 37 C.F.R. § 1.36(b), filed April 29, 2011.

The request is **NOT APPROVED** as moot.

A review of the file record indicates that the power of attorney to Kilpatrick Townsend & Stockton LLP has been revoked by the assignee of the patent application on May 10, 2011. Accordingly, the request to withdraw under 37 C.F.R. § 1.36(b) is moot.

All future communications from the Office will continue to be directed to the new address of record until otherwise notified by applicant.

Telephone inquires concerning this decision should be directed to the undersigned at 571-272-4231.

Michelle R. Eason
Paralegal Specialist
Office of Petitions

UNITED STATES PATENT AND TRADEMARK OFFICE

UNITED STATES DEPARTMENT OF COMMERCE
United States Patent and Trademark Office
Address: COMMISSIONER FOR PATENTS
P.O. Box 1450
Alexandria, Virginia 22313-1450
www.uspto.gov

APPLICATION NO.	FILING DATE	FIRST NAMED INVENTOR	ATTORNEY DOCKET NO.	CONFIRMATION NO.
12/408,461	03/20/2009	Darren G. Jones	DPLN:037US	9414

73905 7590 05/19/2011

SNR DENTON US LLP
P.O. BOX 061080
CHICAGO, IL 60606-1080

EXAMINER	
ROBINSON, KEITH O NEAL	
ART UNIT	**PAPER NUMBER**
1638	
MAIL DATE	**DELIVERY MODE**
05/19/2011	PAPER

Please find below and/or attached an Office communication concerning this application or proceeding.

The time period for reply, if any, is set in the attached communication.

UNITED STATES PATENT AND TRADEMARK OFFICE

Commissioner for Patents
United States Patent and Trademark Office
P.O. Box 1450
Alexandria, VA 22313-1450
www.uspto.gov

MAY 19 2011

SNR DENTON US LLP
P.O. BOX 061080
CHICAGO IL 60606-1080

In re Application of:
Jones et al.
Serial No.: 12/408,461
Filed: March 20, 2009
Attorney Docket No.: **DPLN:037US**

: PETITION DECISION

This is in response to the petition under 37 CFR § 1.59(b), filed April 29, 2011 to expunge information from the above identified application. This application has not been allowed.

Petitioner requests that proprietary information consisting of two license agreements which were submitted on April 29, 2011 be expunged from the record. Petitioner states either: (A) that the information contains trade secret material, proprietary material and/or material that is subject to a protective order which has not been made public; or (B) that the information submitted was unintentionally submitted and the failure to obtain its return would cause irreparable harm to the party who submitted the information or to the party in interest on whose behalf the information was submitted, and the information has not otherwise been made public. The petition fee set forth in 37 CFR § 1.17(g) has been paid.

This is an examined application which is currently under non-final rejection. As such the information provided has been reviewed, in part, but proceedings in the application have not been terminated. As stated in M.P.E.P. 724, upon allowance or other action closing prosecution in an application, petition may be made for return of Proprietary information. The information cannot be expunged at this time.

The petition is **DISMISSED**. Petitioner may resubmit the petition subsequent to a Notice of Allowability or *ex parte Quayle* action being mailed in the application. No additional petition fee will be required at that time.

Should there be any questions about this decision please contact Marianne C. Seidel by letter addressed to Director, TC 1600, at the address listed above, or by telephone at 571-272-0584 or by facsimile sent to the general Office facsimile number, 571-273-8300.

/MC Seidel/
Marianne C. Seidel, Quality Assurance Specialist
Technology Center 1600

UNITED STATES PATENT AND TRADEMARK OFFICE

UNITED STATES DEPARTMENT OF COMMERCE
United States Patent and Trademark Office
Address: COMMISSIONER FOR PATENTS
P.O. Box 1450
Alexandria, Virginia 22313-1450
www.uspto.gov

APPLICATION NO.	FILING DATE	FIRST NAMED INVENTOR	ATTORNEY DOCKET NO.	CONFIRMATION NO.
12/408,461	03/20/2009	Darren G. Jones	DPLN:037US	9414

73905 7590 09/06/2011

SNR DENTON US LLP
P.O. BOX 061080
CHICAGO, IL 60606-1080

EXAMINER	
ROBINSON, KEITH O NEAL	

ART UNIT	PAPER NUMBER
1638	

MAIL DATE	DELIVERY MODE
09/06/2011	PAPER

Please find below and/or attached an Office communication concerning this application or proceeding.

The time period for reply, if any, is set in the attached communication.

UNITED STATES PATENT AND TRADEMARK OFFICE

Commissioner for Patents
United States Patent and Trademark Office
P.O. Box 1450
Alexandria, VA 22313-1450
www.uspto.gov

SEP 0 6 2011

SNR DENTON US LLP
P.O. BOX 061080
CHICAGO IL 60606-1080

In re Application of:
Jones et al.
Serial No.: 12/408,461
Filed: March 20, 2009
Attorney Docket No.: **DPLN:037US**

: PETITION DECISION

This is in response to the renewed petition under 37 CFR § 1.59(b), filed August 8, 2011, to expunge information from the above identified application. This application has been allowed.

Petitioner requests that proprietary information consisting of two license agreements which were submitted on April 29, 2011 be expunged from the record. Petitioner states either: (A) that the information contains trade secret material, proprietary material and/or material that is subject to a protective order which has not been made public; or (B) that the information submitted was unintentionally submitted and the failure to obtain its return would cause irreparable harm to the party who submitted the information or to the party in interest on whose behalf the information was submitted, and the information has not otherwise been made public. The petition fee set forth in 37 CFR § 1.17(g) has been paid.

The reasons set forth in this petition establishes to the satisfaction of the Director that expungement of the information is appropriate. The file entry for this document has been closed and as such the document is no longer publicly available, which is the IFW equivalent to removal of a paper document from a paper file wrapper.

Therefore, petitioner's petition is GRANTED.

Should there be any questions about this decision please contact Marianne C. Seidel by letter addressed to Director, TC 1600, at the address listed above, or by telephone at 571-272-0584 or by facsimile sent to the general Office facsimile number, 571-273-8300.

/MC Seidel/
Marianne C. Seidel, Quality Assurance Specialist
Technology Center 1600

UNITED STATES PATENT AND TRADEMARK OFFICE

Commissioner for Patents
United States Patent and Trademark Office
P.O. Box 1450
Alexandria, VA 22313-1450
www.uspto.gov

BOZICEVIC, FIELD & FRANCIS LLP
1900 UNIVERSITY AVENUE
SUITE 200
EAST PALO ALTO CA 94303

MAILED
MAY 13 2011
OFFICE OF PETITIONS

In re Application of	:	
Shimon Weiss, et al.	:	
Application No. 12/408,466	:	DECISION GRANTING PETITION
Filed: March 20, 2009	:	UNDER 37 CFR 1.313(c)(2)
Attorney Docket No. LBLB-002CIPCON6	:	

This is a decision on the petition under 37 CFR 1.313(c)(2), filed May 12, 2011, to withdraw the above-identified application from issue after payment of the issue fee.

The petition is **GRANTED**.

The above-identified application is withdrawn from issue for consideration of a submission under 37 CFR 1.114 (request for continued examination). *See* 37 CFR 1.313(c)(2).

Petitioner is advised that the issue fee paid on April 5, 2011 cannot be refunded. If, however, this application is again allowed, petitioner may request that it be applied towards the issue fee required by the new Notice of Allowance.[1]

Telephone inquiries regarding this decision should be directed to undersigned at (571) 272-1642. All other inquiries concerning the examination or status of this application should be directed to the Technology Center.

This application is being referred to Technology Center AU 1631 for processing of the request for continued examination under 37 CFR 1.114 and for consideration of the concurrently filed information disclosure statement.

/AMW/
April M. Wise
Petitions Examiner
Office of Petitions

[1] *The request to apply the issue fee to the new Notice may be satisfied by completing and returning the new Part B – Fee(s) Transmittal Form (along with any balance due at the time of submission). Petitioner is advised that the Issue Fee Transmittal Form must be completed and timely submitted to avoid abandonment of the application.*

UNITED STATES PATENT AND TRADEMARK OFFICE

UNITED STATES DEPARTMENT OF COMMERCE
United States Patent and Trademark Office
Address: COMMISSIONER FOR PATENTS
P.O. Box 1450
Alexandria, Virginia 22313-1450
www.uspto.gov

APPLICATION NO.	FILING DATE	FIRST NAMED INVENTOR	ATTORNEY DOCKET NO.	CONFIRMATION NO.
12/408,468	03/20/2009	Darren G. Jones	DPLN:039US	9424

73905 7590 05/19/2011

SNR DENTON US LLP
P.O. BOX 061080
CHICAGO, IL 60606-1080

EXAMINER	
ROBINSON, KEITH O NEAL	
ART UNIT	**PAPER NUMBER**
1638	
MAIL DATE	**DELIVERY MODE**
05/19/2011	PAPER

Please find below and/or attached an Office communication concerning this application or proceeding.

The time period for reply, if any, is set in the attached communication.

UNITED STATES PATENT AND TRADEMARK OFFICE

Commissioner for Patents
United States Patent and Trademark Office
P.O. Box 1450
Alexandria, VA 22313-1450
www.uspto.gov

MAY 19 2011

SNR DENTON US LLP
P.O. BOX 061080
CHICAGO IL 60606-1080

In re Application of:
Jones et al.
Serial No.: 12/408,468
Filed: March 20, 2009
Attorney Docket No.: **DPLN:039US**

: PETITION DECISION

This is in response to the petition under 37 CFR § 1.59(b), filed May 4, 2011, to expunge information from the above identified application. This application has not been allowed.

Petitioner requests that the proprietary information which consists of a license agreement which corresponds to references C11 in the Supplemental Information Disclosure Statement filed concurrently herewith be expunged from the record. Petitioner states either: (A) that the information contains trade secret material, proprietary material and/or material that is subject to a protective order which has not been made public; or (B) that the information submitted was unintentionally submitted and the failure to obtain its return would cause irreparable harm to the party who submitted the information or to the party in interest on whose behalf the information was submitted, and the information has not otherwise been made public. The petition fee set forth in 37 CFR § 1.17(g) has been paid.

This application in currently under non-final rejection. As such the information provided has not been reviewed nor have proceedings in the application been terminated. As stated in M.P.E.P. 724, upon allowance or other action closing prosecution in an application, petition may be made for return of Proprietary information. The information cannot be expunged at this time.

The petition is **DISMISSED**. Petitioner may resubmit the petition subsequent to a Notice of Allowability or *ex parte Quayle* action being mailed in the application. No additional petition fee will be required at that time.

Should there be any questions about this decision please contact Marianne C. Seidel by letter addressed to Director, TC 1600, at the address listed above, or by telephone at 571-272-0584 or by facsimile sent to the general Office facsimile number, 571-273-8300.

/MC Seidel/
Marianne C. Seidel, Quality Assurance Specialist
Technology Center 1600

UNITED STATES PATENT AND TRADEMARK OFFICE

UNITED STATES DEPARTMENT OF COMMERCE
United States Patent and Trademark Office
Address: COMMISSIONER FOR PATENTS
P.O. Box 1450
Alexandria, Virginia 22313-1450
www.uspto.gov

APPLICATION NO.	FILING DATE	FIRST NAMED INVENTOR	ATTORNEY DOCKET NO.	CONFIRMATION NO.
12/408,468	03/20/2009	Darren G. Jones	DPLN:039US	9424

73905 7590 09/12/2011

SNR DENTON US LLP
P.O. BOX 061080
CHICAGO, IL 60606-1080

EXAMINER	
ROBINSON, KEITH O NEAL	
ART UNIT	PAPER NUMBER
1638	
MAIL DATE	DELIVERY MODE
09/12/2011	PAPER

Please find below and/or attached an Office communication concerning this application or proceeding.

The time period for reply, if any, is set in the attached communication.

UNITED STATES PATENT AND TRADEMARK OFFICE

Commissioner for Patents
United States Patent and Trademark Office
P.O. Box 1450
Alexandria, VA 22313-1450
www.uspto.gov

SEP 1 2 2011

SNR DENTON US LLP
P.O. BOX 061080
CHICAGO IL 60606-1080

In re Application of:
Jones et al.
Serial No.: 12/408,468
Filed: March 20, 2009
Attorney Docket No.: **DPLN:039US**

: PETITION DECISION

This is in response to the petition under 37 CFR § 1.59(b), filed August 8, 2011, to expunge information from the above identified application. This application has been allowed.

Petitioner requests that the proprietary information which consists of a license agreement which corresponds to references C 11 in the Supplemental Information Disclosure Statement filed May 4, 2011 be expunged from the record. Petitioner states either: (A) that the information contains trade secret material, proprietary material and/or material that is subject to a protective order which has not been made public; or (B) that the information submitted was unintentionally submitted and the failure to obtain its return would cause irreparable harm to the party who submitted the information or to the party in interest on whose behalf the information was submitted, and the information has not otherwise been made public. The petition fee set forth in 37 CFR § 1.17(g) has been paid.

The reasons set forth in this petition establishes to the satisfaction of the Director that expungement of the information is appropriate. The file entry for this document has been closed and as such the document is no longer publicly available, which is the IFW equivalent to removal of a paper document from a paper file wrapper.

Therefore, petitioner's petition is GRANTED.

Should there be any questions about this decision please contact Marianne C. Seidel by letter addressed to Director, TC 1600, at the address listed above, or by telephone at 571-272-0584 or by facsimile sent to the general Office facsimile number, 571-273-8300.

/MC Seidel/
Marianne C. Seidel, Quality Assurance Specialist
Technology Center 1600

UNITED STATES PATENT AND TRADEMARK OFFICE

UNITED STATES DEPARTMENT OF COMMERCE
United States Patent and Trademark Office
Address: COMMISSIONER FOR PATENTS
P.O. Box 1450
Alexandria, Virginia 22313-1450
www.uspto.gov

APPLICATION NO.	FILING DATE	FIRST NAMED INVENTOR	ATTORNEY DOCKET NO.	CONFIRMATION NO.
12/408,482	03/20/2009	Darren G. Jones	DPLN:040US	9460

73905 7590 05/19/2011
SNR DENTON US LLP
P.O. BOX 061080
CHICAGO, IL 60606-1080

EXAMINER	
ROBINSON, KEITH O NEAL	
ART UNIT	PAPER NUMBER
1638	
MAIL DATE	DELIVERY MODE
05/19/2011	PAPER

Please find below and/or attached an Office communication concerning this application or proceeding.

The time period for reply, if any, is set in the attached communication.

UNITED STATES PATENT AND TRADEMARK OFFICE

Commissioner for Patents
United States Patent and Trademark Office
P.O. Box 1450
Alexandria, VA 22313-1450
www.uspto.gov

MAY 19 2011

SNR DENTON US LLP
P.O. BOX 061080
CHICAGO IL 60606-1080

In re Application of:
Jones et al.
Serial No.: 12/408,482
Filed: March 20, 2009
Attorney Docket No.: **DPLN:040US**

: PETITION DECISION

This is in response to the petition under 37 CFR § 1.59(b), filed April 29, 2011 to expunge information from the above identified application. This application has not been allowed.

Petitioner requests that proprietary information consisting of two license agreements which were submitted on April 29, 2011 be expunged from the record. Petitioner states either: (A) that the information contains trade secret material, proprietary material and/or material that is subject to a protective order which has not been made public; or (B) that the information submitted was unintentionally submitted and the failure to obtain its return would cause irreparable harm to the party who submitted the information or to the party in interest on whose behalf the information was submitted, and the information has not otherwise been made public. The petition fee set forth in 37 CFR § 1.17(g) has been paid.

This is an examined application which is currently under non-final rejection. As such the information provided has been reviewed, in part, but proceedings in the application have not been terminated. As stated in M.P.E.P. 724, upon allowance or other action closing prosecution in an application, petition may be made for return of Proprietary information. The information cannot be expunged at this time.

The petition is **DISMISSED**. Petitioner may resubmit the petition subsequent to a Notice of Allowability or *ex parte Quayle* action being mailed in the application. No additional petition fee will be required at that time.

Should there be any questions about this decision please contact Marianne C. Seidel by letter addressed to Director, TC 1600, at the address listed above, or by telephone at 571-272-0584 or by facsimile sent to the general Office facsimile number, 571-273-8300.

/MC Seidel/
Marianne C. Seidel, Quality Assurance Specialist
Technology Center 1600

UNITED STATES PATENT AND TRADEMARK OFFICE

UNITED STATES DEPARTMENT OF COMMERCE
United States Patent and Trademark Office
Address: COMMISSIONER FOR PATENTS
P.O. Box 1450
Alexandria, Virginia 22313-1450
www.uspto.gov

APPLICATION NO.	FILING DATE	FIRST NAMED INVENTOR	ATTORNEY DOCKET NO.	CONFIRMATION NO.
12/408,482	03/20/2009	Darren G. Jones	DPLN:040US	9460

73905 7590 09/06/2011

SNR DENTON US LLP
P.O. BOX 061080
CHICAGO, IL 60606-1080

EXAMINER	
ROBINSON, KEITH O NEAL	
ART UNIT	**PAPER NUMBER**
1638	

MAIL DATE	DELIVERY MODE
09/06/2011	PAPER

Please find below and/or attached an Office communication concerning this application or proceeding.

The time period for reply, if any, is set in the attached communication.

UNITED STATES PATENT AND TRADEMARK OFFICE

Commissioner for Patents
United States Patent and Trademark Office
P.O. Box 1450
Alexandria, VA 22313-1450
www.uspto.gov

SEP 0 6 2011

SNR DENTON US LLP
P.O. BOX 061080
CHICAGO IL 60606-1080

In re Application of:
Jones et al.
Serial No.: 12/408,482
Filed: March 20, 2009
Attorney Docket No.: **DPLN:040US**

: PETITION DECISION

This is in response to the petition under 37 CFR § 1.59(b), filed August 8, 2011, to expunge information from the above identified application. This application has been allowed.

Petitioner requests that proprietary information consisting of two license agreements which were submitted on April 29, 2011 be expunged from the record. Petitioner states either: (A) that the information contains trade secret material, proprietary material and/or material that is subject to a protective order which has not been made public; or (B) that the information submitted was unintentionally submitted and the failure to obtain its return would cause irreparable harm to the party who submitted the information or to the party in interest on whose behalf the information was submitted, and the information has not otherwise been made public. The petition fee set forth in 37 CFR § 1.17(g) has been paid.

The reasons set forth in this petition establishes to the satisfaction of the Director that expungement of the information is appropriate. The file entry for this document has been closed and as such the document is no longer publicly available, which is the IFW equivalent to removal of a paper document from a paper file wrapper.

Therefore, petitioner's petition is GRANTED.

Should there be any questions about this decision please contact Marianne C. Seidel by letter addressed to Director, TC 1600, at the address listed above, or by telephone at 571-272-0584 or by facsimile sent to the general Office facsimile number, 571-273-8300.

/MC Seidel/
Marianne C. Seidel, Quality Assurance Specialist
Technology Center 1600

Doc Code: PET.AUTO **Document Description: Petition automatically granted by EFS-Web**	PTO/SB/83 U.S. Patent and Trademark Office Department of Commerce

Electronic Petition Request	**REQUEST FOR WITHDRAWAL AS ATTORNEY OR AGENT AND CHANGE OF CORRESPONDENCE ADDRESS**
Application Number	12408504
Filing Date	20-Mar-2009
First Named Inventor	Samuel SAUNDERS
Art Unit	2627
Examiner Name	MARK FISCHER
Attorney Docket Number	2052996-5006US
Title	DYNAMIC VISUAL FEATURE COORDINATION IN AN ELECTRONIC HAND HELD DEVICE

◉ Please withdraw me as attorney or agent for the above identified patent application and the practitioners of record associated with Customer Number: 23345

The reason(s) for this request are those described in 37 CFR:

10.40(c)(1)(vi)

Certifications

☒ I/We have given reasonable notice to the client, prior to the expiration of the response period, that the practitioner(s) intend to withdraw from employment

☒ I/We have delivered to the client or a duly authorized representative of the client all papers and property (including funds) to which the client is entitled

☒ I/We have notified the client of any responses that may be due and the time frame within which the client must respond

Change the correspondence address and direct all future correspondence to the first named inventor or assignee that has properly made itself of record pursuant to 37 CFR 3.71:

Name	Samuel F. Saunders
Address	732 Freshwater Cove Lane
City	Lovingston
State	VA
Postal Code	22949
Country	US

I am authorized to sign on behalf of myself and all withdrawing practitioners.	
Signature	/Charles J. Gross/
Name	Charles J. Gross
Registration Number	52972

UNITED STATES PATENT AND TRADEMARK OFFICE

Commissioner for Patents
United States Patent and Trademark Office
P.O. Box 1450
Alexandria, VA 22313-1450
www.uspto.gov

Decision Date : December 20, 2011

In re Application of :

Samuel SAUNDERS

Application No : 12408504

Filed : 20-Mar-2009

Attorney Docket No : 2052996-5006US

DECISION ON REQUEST TO WITHDRAW AS ATTORNEY/AGENTOF RECORD

This is an electronic decision on the Request to Withdraw as attorney or agent of record under 37 CFR § 1.36(b), filed December 20, 2011

The request is **APPROVED.**

The request was signed by Charles J. Gross (registration no. 52972) on behalf of all attorneys/agents associated with Customer Number 23345 . All attorneys/agents associated with Cusotmer Number 23345 have been withdrawn.

Since there are no remaining attorneys of record, all future communications from the Office will be directed to the first named inventor or assignee that has properly made itself of record pursuant to 37 CFR 3.71, with correspondence address:

Name	Samuel F. Saunders
Name2	
Address 1	732 Freshwater Cove Lane
Address 2	
City	Lovingston
State	VA
Postal Code	22949
Country	US

As a reminder, requester is required to inform the first named inventor or assignee that has properly made itself of record pursuant to 37 CFR 3.71 of the electronically processed petition.

Telephone inquiries concerning this decision should be directed to the Patent Electronic Business Center (EBC) at 866-217-9197.

Office of Petitions

UNITED STATES PATENT AND TRADEMARK OFFICE

Commissioner for Patents
United States Patent and Trademark Office
P.O. Box 1450
Alexandria, VA 22313-1450
www.uspto.gov

10-12-2010

Patent No. : 7,801,278 B2
Ser. No. : 12/408,514
Inventor(s) : Ito, et. al.
Issued : September 21, 2010

Re: Request for Certificate of Correction

Consideration has been given your request for the issuance of a certificate of correction for the above-identified patent under the provisions of Rule(s) 1.322.

Assignees' names and addresses (assignment data) printed in a patent, are based *solely* on information supplied in the appropriate space for identifying the assignment data, i.e., item 3 of the Issue Fee Transmittal Form PTOL-85B. Granting of a request under 37 CFR 3.81(b) is required to correct applicant's error providing ***incorrect or erroneous*** assignment data, *before* issuance of a Certificate of Correction, under 37 CFR 1.323 *(see Manual of Patent Examining Procedures (M.P.E.P) Chp.1400, sect. 1481).* This procedure is required *at any time after the issue fee is paid*, including after issuance of the patent.

In view of the foregoing, your request is hereby denied.

A request to correct the Assignee under 37 CFR 3.81(b) should include:

A. **the processing fee set forth in 37 CFR 1.17(i) (currently $130);**
B. a statement that the failure to include the correct assignee name on the PTOL-85B was inadvertent; and
C. a copy of the Notice of Recordation of Assignment Document, reflecting the reel and frame number where the assignment(s) is recorded and/or reflecting proof of *the date* the assignment was submitted for recordation.

In the Request, Applicant(s) may request that the file be forwarded to Certificates of Correction Branch, for issuance of a Certificate of Correction, if the Request is granted.

Any request under 37 CFR 3.81(b) should be directed to the following address or facsimile number:

By mail: Mail Stop PETITIONS
Commissioner for Patents
Post Office Box 1450
Alexandria, VA 22313-1450

By hand: Customer Service Window
Mail Stop Petitions
Randolph Building
401 Dulany Street
Alexandria, VA 22314

By fax: (703) 872-9306
ATTN: Office of Petitions

If a fee (currently $100) was previously submitted for consideration of a Request for Certificate of Correction, under CFR 1.323, to correct assignment data, , no additional fee is required.

Eva James
For Mary Diggs
Decisions & Certificates
of Correction Branch
(703) 756-1583 or 1580

Charles N.J. Ruggiero
Ohlandt, Greeley, Ruggiero & Perle, LLP
One Landmark square, 10th floor
Stamford, Connecticut 06901-2682

ej

UNITED STATES PATENT AND TRADEMARK OFFICE

Commissioner for Patents
United States Patent and Trademark Office
P.O. Box 1450
Alexandria, VA 22313-1450
www.uspto.gov

Charles N.J. Ruggiero, Esq.
Ohlandt, Greeley, Ruggiero & Perle, L.L.P.
One Landmark Square, 10th Floor
Stamford, CT 06901-2682

MAILED

APR 08 2011

OFFICE OF PETITIONS

In re Patent No. **7,801,278** :
Issue Date: September 21, 2010 :
Application No. 12/408,514 : DECISION ON PETITION
Filed: March 20, 2009 : UNDER 37 CFR 3.81(b)
Attorney Docket No. **430.0173USU** :

This is a decision on the petition filed November 4, 2010, which is being treated as a petition under 37 CFR 3.81(b) to correct the name of the assignee on the front page of the above-identified patent by way of a certificate of correction.

The petition is **DISMISSED**.

37 CFR 3.81(b), effective June 25, 2004, reads:

> *After payment of the issue fee:* Any request for issuance of an application in the name of the assignee submitted after the date of payment of the issue fee, and any request for a patent to be corrected to state the name of the assignee, must state that the assignment was submitted for recordation as set forth in § 3.11 **before issuance of the patent**, and must include a request for a certificate of correction under § 1.323 of this chapter (accompanied by the fee set forth in § 1.20(a) and the processing fee set forth in § 1.17(i) of this chapter [emphasis added]. *See also* MPEP 1481.01.

U.S. Patent and Trademark Office assignment records disclose that an assignment from Yasutaka ITO, et *al.* to Kabushiki Kaisha Toshiba and Toshiba Electron Tubes & Devices Co., Ltd. was recorded on September 28, 2010, **after the date of issuance of this patent.** Accordingly, since the assignment was not submitted for recordation until after issuance of this patent, issuance of a certificate of correction would not be proper.

Telephone inquiries concerning this decision on petition should be directed to Monica A. Graves at (571) 272-7253.

Thurman K. Page
Petitions Examiner
Office of Petitions

UNITED STATES PATENT AND TRADEMARK OFFICE

Commissioner for Patents
United States Patent and Trademark Office
P.O. Box 1450
Alexandria, VA 22313-1450
www.uspto.gov

KILPATRICK TOWNSEND & STOCKTON, LLP
TWO EMBARCADERO CENTER
EIGHTH FLOOR
SAN FRANCISCO, CA 94111-3834

MAILED

MAY 24 2011

OFFICE OF PETITIONS

In re Application of :
Takeshi Saito :
Application No. 12/408,520 : DECISION ON PETITION
Filed: June 12, 2009 :
Attorney Docket No. 21654P-014900US :

This is a decision on the petition under 37 CFR 1.182 filed on December 16, 2010, requesting that the above-identified application be given the original filing date of March 20, 2009 instead of the presently accorded filing date of June 12, 2009.

The application was filed on March 20, 2009. However, on April 14, 2009, the Office of Patent Application Processing mailed a "Notice to File Missing Parts of Nonprovisional Application" advising petitioner that a filing date had been accorded the application, but that an oath or declaration and an English translation of the specification along with processing fee of $130 appeared to be missing. Additionally, the Notice required submission of $130 for the late filing of the oath/declaration.

In response, on June 12, 2009, petitioner filed a specification (in English)[1], claims, an abstract, an executed oath along with the $130 late filing surcharge and nine (9) sheets of replacement drawings containing Figures 1-9.

In view of the above, the petition is granted. The petition fee of $400 is not due and non has been charged to petitioner's deposit account.

This application file is being referred to the Office of Patent Application Processing for processing with a filing date of March 20, 2009.

Telephone inquiries concerning this matter may be directed to Andrea Smith at (571) 272-3226.

Andrea Smith
Petitions Examiner
Office of Petitions

David Bucci
Petitions Examiner

[1] It is noted that the $130 processing fee for an application filed in a language other than English, was submitted on March 20, 2009.

UNITED STATES PATENT AND TRADEMARK OFFICE

UNITED STATES DEPARTMENT OF COMMERCE
United States Patent and Trademark Office
Address: COMMISSIONER FOR PATENTS
P.O. Box 1450
Alexandria, Virginia 22313-1450
www.uspto.gov

APPLICATION NO.	FILING DATE	FIRST NAMED INVENTOR	ATTORNEY DOCKET NO.	CONFIRMATION NO.
12/408,536	03/20/2009	James M. Lee	2550/C38	9574

2101 7590 08/26/2011
Sunstein Kann Murphy & Timbers LLP
125 SUMMER STREET
BOSTON, MA 02110-1618

EXAMINER	
HERNANDEZ-PREWITT, ROGER	
ART UNIT	PAPER NUMBER
2855	

NOTIFICATION DATE	DELIVERY MODE
08/26/2011	ELECTRONIC

Please find below and/or attached an Office communication concerning this application or proceeding.

The time period for reply, if any, is set in the attached communication.

Notice of the Office communication was sent electronically on above-indicated "Notification Date" to the following e-mail address(es):

PATENTS@SUNSTEINLAW.COM

UNITED STATES PATENT AND TRADEMARK OFFICE

Commissioner for Patents
United States Patent and Trademark Office
P.O. Box 1450
Alexandria, VA 22313-1450
www.uspto.gov

Sunstein Kann Murphy & Timbers LLP
125 SUMMER STREET
BOSTON MA 02110-1618

Applicant: Lee
Appl. No.: 12/408,536
Filing Date: March 20, 2009
Title: MANAGEMENT SYSTEM FOR MEMS INERTIAL SENSORS
Attorney Docket No.: 2550/C38
Pub. No.: US 2009/0293615 A1
Pub. Date: December 3, 2009

This is a decision on the request for republication of patent application publication under 37 CFR 1.221(a), filed on November 9, 2009, for the above-identified application.

The request under 37 CFR 1.221(a) is DISMISSED.

37 CFR 1.221(a) requires "a copy of the application in compliance with the Office electronic filing system requirements and be accompanied by the publication fee set forth in § 1.18(d) and the processing fee set forth in § 1.17(i)". If the request for republication does not comply with the electronic filing system requirements, the republication will not take place and the publication fee set forth in § 1.18(d) will be refunded. The processing fee will be retained.

The applicant did not supply a copy of the application in compliance with the Office electronic filing system, as required by 37 CFR 1.221(a) because **the applicant submitted the papers as a "Document for an existing application", which are entered into the application file, and not as a "Pre-Grant Publication" submission**. The request for republication does not comply with the electronic filing system requirements, thus republication will not take place.

Any request for republication under 37 CFR 1.221(a), must be submitted via the EFS system, as a Pre-Grant publication submission and must include a copy of the application in compliance with the Office electronic filing system requirements. The applicant is directed to the following website for additional instructions on how to submit a Pre-Grant Publication submission via the electronic filing system:

http://www.uspto.gov/ebc/portal/efs/pgpub_quickstart.pdf

Any questions or requests for reconsideration of the decision should be addressed as follows:

By mail to: Mail Stop PGPUB
Commissioner for Patents
P.O. Box 1450
Alexandria, Va. 22313-1450

By facsimile: 571-273-8300

Telephone inquiries regarding this correspondence should be directed to The Office of Data Management at 571-272-4200.

Tammy J. Koontz
Office of Data Management
United States Patent & Trademark Office

Adjustment date: 08/26/2011 KKING1
11710/2009 INTEFSW 00003452 194972 12408536
02 FC:1504 300.00 CR

UNITED STATES PATENT AND TRADEMARK OFFICE

Commissioner for Patents
United States Patent and Trademark Office
P.O. Box 1450
Alexandria, VA 22313-1450
www.uspto.gov

PERKINS COIE LLP
607 FOURTEENTH STREET, NW
WASHINGTON DC 20005

MAILED

AUG 30 2010

OFFICE OF PETITIONS

In re Application of :
Eissenstad, et al. :
Application No. 12/408,584 : DECISION
Filed/Deposited: 20 March, 2009 :
Attorney Docket No. 66781-007CONT2 :

This is a decision on the petition filed 22 September, 2009, supplemented on 23 July, 2010, which seeks to have accorded a filing date of 20 March, 2009, for specification pages 25 - 49 of the above-identified application pursuant to 37 C.F.R. §1.57 based upon a showing that the omitted pages were present in the prior-filed co-pending nonprovisional application(s) to which this application claimed benefit (pursuant to 37 C.F.R. §1.78) on deposit.

This submission is being treated as a petition pursuant to 37 C.F.R. §1.182, requesting that the above-referenced application be accorded a filing date of 20 March, 2009, including amendments to the specification.

The petition as considered pursuant to 37 C.F.R. § 1.182 is **GRANTED to the extent indicated below**; the petition pursuant to 37 C.F.R. § 1.57 is **DISMISSED**.

BACKGROUND

The instant application was deposited on 20 March, 2009.

With this petition, Petitioner seeks to introduce a number of changes to the specification.

On 22 April, 2009, the Office of Patent Application Processing (OPAP) mailed a Notice of Missing Parts in a Nonprovisional Application which also included a Notice of Omitted Items, stating that the application had been accorded a filing date, but it appeared to have omitted pages 25 – 49 of the specification.

The Office indicated that Petitioner might demonstrate on petition, *inter alia*, the presence of the pages by presentation of evidence of deposit (e.g., date-stamped receipt card, EFS Acknowledgement Receipt); or submit the pages and accept the date of submission as the filing

date, or the incorporation by reference of the omitted materials pursuant to the regulations at 37 C.F.R. §1.57.

The Office gave Petitioner two (2) months within which to reply.

On 22 September, 2009, Petitioner filed, *inter alia*, filed a request and fee for extension of time with a fee and petition pursuant to 37 C.F.R. §1.57 seeking a filing date of 20 March, 2009, for pages 25 – 49 of the specification. Petitioner points to the parent (Application No. 11/490,261 (the '261 application)) as containing the presently omitted items and appears to have filed an amendment under the rule.

(Any determination as to an amendment will be made by the Examiner.)

On 23 July, 2010, Petitioner supplemented his petition with a copy from the '261 application of the omitted pages.

Petitioner acknowledged inadvertently omitting pages 25 – 49 of the specification on deposit of the instant application. Petitioner argued, however, that entry of pages 25 – 49 of the specification is merited, because the application contains a preliminary amendment and that amendment, which was present on filing and seeks entry of a priority claim into the specification – as such, the present application is a continuation of U.S. Application No. 11/490,261, filed 21 July, 2006, which is a continuation of Application No. 11/124,056, filed 9 May, 2005 (now Patent No. 7,378,441), which claimed benefit of Provisional Application No. 60/568,935, filed 7 May, 2004, and all of which were incorporated by reference on deposit of the instant application.

This submission is treated as an assertion that a specification was constructively present in the present application on filing, by virtue of the incorporation by reference of the prior-filed non-provisional application to which benefit is claimed, pursuant to M.P.E.P.§201.06(c)(IV)(A).

Petitioner's arguments and evidence have been considered.

The guidance in the Commentary at M.P.E.P. §201.06(c)(IV)(A) provides, in pertinent part:

> Material needed to accord an application a filing date may not be incorporated by reference unless an appropriate petition under 37 C.F.R. §1.57(a)(3) or under 37 C.F.R. §1.182 is granted. Until such a petition has been granted, the application will not be entitled to a filing date.
>
> ***
>
> In an application containing an explicit incorporation by reference statement in the specification or in a transmittal letter (if the transmittal letter was filed prior to September 21, 2004), a petition for the granting of a filing date may be made under 37 C.F.R. §1.182. A petition under 37 C.F.R. §1.182 and the required petition fee, including an amendment submitting the necessary omitted material,

> requesting that the necessary omitted material contained in the prior application and submitted in the amendment, be included in the continuation or divisional application based upon the incorporation by reference statement (emphasis added), is required in order to accord the application a filing date as of the date of deposit of the continuation or divisional application. An amendment submitting the omitted material and relying upon the incorporation by reference will not be entered in the continuation or divisional application unless a decision granting the petition states that the application is accorded a filing date and that the amendment will be entered.

35 U.S.C. §120 provides, *in pertinent part*:

> An application for patent for an invention disclosed in the manner provided by the first paragraph of section 112 of this title in an application previously filed in the United States, or as provided by section 363 of this title, which is filed by an inventor or inventors named in the previously filed application shall have the same effect, as to such invention, as though filed on the date of the prior application, if filed before the patenting or abandonment of or termination of proceedings on the first application or on an application similarly entitled to the benefit of the filing date of the first application and if it contains or is amended to contain a specific reference to the earlier filed application.

As set forth above, this application is a continuation of U.S. Application No. 11/490,261, and the contents of the same have been incorporated by reference. Thus, pursuant to 35 U.S.C. §120, the application as filed is considered to have incorporated by reference the parent application as to the inadvertently omitted specification. In view of the incorporation by reference of the parent application, an amendment directing the entry of the specification of the parent application would not constitute new matter, however, entry of any amendment is within the exclusive purview of the Examiner.

CONCLUSION

Thus, the petition as considered pursuant to:

- 37 C.F.R. § 1.182 is **GRANTED** to the extent that a filing date of 20 March, 2009, may be accorded to pages 25 – 49 of application, and receipt of the amendment to include the inadvertently omitted pages from prior application No.11/490,261; and

- 37 C.F.R. § 1.57 is **DISMISSED as moot**.

The application is released to the Office of Patent Application Processing (OPAP) for further processing in due course with a **filing date of 20 March, 2009** using:

- Pages 1- 24 and 50 – 111 and six (6) sheets of drawings deposited on 20 March, 2009; and
- Pages 25 - 49 deposited on 23 July, 2010; and

with further instruction to the OPAP to issue a filing receipt accordingly.

Telephone inquiries concerning this matter should be directed to John J Gillon, Jr., attorney, at (571) 272-3214. Inquiries regarding initial patent application processing should be directed to OPAP at (703) 308-9210.

Chris Bottorff
Supervisory Petitions Examiner
Office of Petitions

UNITED STATES PATENT AND TRADEMARK OFFICE

Commissioner for Patents
United States Patent and Trademark Office
P.O. Box 1450
Alexandria, VA 22313-1450
www.uspto.gov

SEAGER TUFTE & WICKHEM, LLC
1221 NICOLLET AVENUE
SUITE 800
MINNEAPOLIS MN 55403-2420

MAILED

FEB 24 2012

OFFICE OF PETITIONS

In re Application of :
Christian Baccelli et al :
Application No. 12/408,592 : DECISION ON PETITION
Filed: March 20, 2009 : TO WITHDRAW
Attorney Docket No. 1292.1387102 : FROM RECORD
:

This is a decision on the Request to Withdraw as attorney or agent under 37 C.F.R. § 1.36(b) or 37 C.F.R. § 10.40 filed February 16, 2012.

The request is **APPROVED**.

A review of the file record indicates that Katharina W. Schuster: (1) does not have power of attorney in this patent application; and (2) has been employed or otherwise engaged in the proceedings in this patent application. In view of the present decision, Katharina W. Schuster has been withdrawn from the present application and may not prepare or submit papers under 37 C.F.R. § 1.34, or correspond in any manner in this application unless appointed in an acceptable power of attorney under 37 C.F.R. § 1.32(b).

Telephone inquires concerning this decision should be directed to Irvin Dingle at 571-272-3210.

Irvin Dingle
Petitions Examiner
Office of Petitions

cc: Katharina W. Schuster
Sprinkle IP Law Group
1301 W. 25th St., Suite 408
Austin, TX 78705

UNITED STATES PATENT AND TRADEMARK OFFICE

Commissioner for Patents
United States Patent and Trademark Office
P.O. Box 1450
Alexandria, VA 22313-1450
www.uspto.gov

WILSON, SONSINI, GOODRICH & ROSATI
650 PAGE MILL ROAD
PALO ALTO, CA 94304-1050

MAILED

MAR 21 2011

OFFICE OF PETITIONS

In re Application of :
Nancy L. AUGUSTINE, et *al.* :
Application No. 12/408,619 : DECISION ON PETITION TO
Filed: March 20, 2009 : WITHDRAW FROM RECORD
Attorney Docket No. **34645-703.501** :

This is a decision on the renewed Request to Withdraw as attorney or agent of record under 37 C.F.R. § 1.36(b), filed December 30, 2010.

The request is **NOT APPROVED**.

The request to withdraw as attorney/agent of record and change of correspondence address is hereby not accepted. Petitioner has not complied with current USPTO requirements, set forth in 37 CFR 10.40 concerning Request for Withdrawal as Attorney and Change of Correspondence Address.

Petitioner has not properly submitted forwarding correspondence address information for the application.

The Office will only accept correspondence address changes to the most current address information provided for the assignee of the entire interest ***who properly became of record*** *under 37 CFR 3.71*, or if no assignee of the entire interest has properly been made of record, the most current address information provided for the first named inventor. 37 CFR 3.71 (c) states:

> ***An assignee becomes of record either in a national patent application or a reexamination proceeding by filing a statement in compliance with § 3.73 (b) that is signed by a party who is authorized to act on behalf of the assignee.***

The Office will also no longer change the correspondence address to that of a new practitioner unless the Request is accompanied by a power of attorney to a new practitioner (e.g., Form PTO/SB/82). All future communications from the Office will be directed to the above-listed address until otherwise properly notified by the applicant or a proper change of correspondence address has been submitted.

Telephone inquiries concerning this decision should be directed to the undersigned at 571-272-7253. All other inquires concerning either the examination or status of the application should be directed to the Technology Center.

/Monica A. Graves/
Petitions Examiner, Office of Petitions

UNITED STATES PATENT AND TRADEMARK OFFICE

Commissioner for Patents
United States Patent and Trademark Office
P.O. Box 1450
Alexandria, VA 22313-1450
www.uspto.gov

WILSON, SONSINI, GOODRICH & ROSATI
650 PAGE MILL ROAD
PALO ALTO, CA 94304-1050

MAILED

MAR 21 2011

OFFICE OF PETITIONS

In re Application of :

Nancy L. AUGUSTINE, et *al.* :
Application No. 12/408,629 :
Filed: March 20, 2009 :
Attorney Docket No. **34645-701.501** :

DECISION ON PETITION TO
WITHDRAW FROM RECORD

This is a decision on the renewed Request to Withdraw as attorney or agent of record under 37 C.F.R. § 1.36(b), filed December 30, 2010.

The request is **NOT APPROVED**.

The request to withdraw as attorney/agent of record and change of correspondence address is hereby not accepted. Petitioner has not complied with current USPTO requirements, set forth in 37 CFR 10.40 concerning Request for Withdrawal as Attorney and Change of Correspondence Address.

Petitioner has not properly submitted forwarding correspondence address information for the application.

The Office will only accept correspondence address changes to the most current address information provided for the assignee of the entire interest ***who properly became of record*** *under 37 CFR 3.71*, or if no assignee of the entire interest has properly been made of record, the most current address information provided for the first named inventor. 37 CFR 3.71 (c) states:

> ***An assignee becomes of record either in a national patent application or a reexamination proceeding by filing a statement in compliance with § 3.73 (b) that is signed by a party who is authorized to act on behalf of the assignee.***

The Office will also no longer change the correspondence address to that of a new practitioner unless the Request is accompanied by a power of attorney to a new practitioner (e.g., Form PTO/SB/82). All future communications from the Office will be directed to the above-listed address until otherwise properly notified by the applicant or a proper change of correspondence address has been submitted.

Telephone inquiries concerning this decision should be directed to the undersigned at 571-272-7253. All other inquires concerning either the examination or status of the application should be directed to the Technology Center.

/Monica A. Graves/
Petitions Examiner, Office of Petitions

Doc Code: PET.AUTO **Document Description: Petition automatically granted by EFS-Web**	PTO/SB/83 U.S. Patent and Trademark Office Department of Commerce

Electronic Petition Request	**REQUEST FOR WITHDRAWAL AS ATTORNEY OR AGENT AND CHANGE OF CORRESPONDENCE ADDRESS**
Application Number	12408649
Filing Date	20-Mar-2009
First Named Inventor	Jeffrey Herold
Art Unit	3781
Examiner Name	TRI MAI
Attorney Docket Number	000409.000004
Title	APPARATUS AND METHOD FOR SELF-STABILIZING ROLLABLE LUGGAGE ASSEMBLY

◉ Please withdraw me as attorney or agent for the above identified patent application and the practitioners of record associated with Customer Number: 87457

The reason(s) for this request are those described in 37 CFR:

10.40(c)(5)

Certifications

☒ I/We have given reasonable notice to the client, prior to the expiration of the response period, that the practitioner(s) intend to withdraw from employment

☒ I/We have delivered to the client or a duly authorized representative of the client all papers and property (including funds) to which the client is entitled

☒ I/We have notified the client of any responses that may be due and the time frame within which the client must respond

Change the correspondence address and direct all future correspondence to the first named inventor or assignee that has properly made itself of record pursuant to 37 CFR 3.71:

Name	Jeffrey Herold, West Coast Trends
Address	17811 Jamestown Lane
City	Huntington Beach
State	CA
Postal Code	92647
Country	US

I am authorized to sign on behalf of myself and all withdrawing practitioners.	
Signature	/Edward J. Marshall/
Name	Edward J. Marshall
Registration Number	45395

UNITED STATES PATENT AND TRADEMARK OFFICE

Commissioner for Patents
United States Patent and Trademark Office
P.O. Box 1450
Alexandria, VA 22313-1450
www.uspto.gov

Decision Date : October 19,2011

In re Application of :

Jeffrey Herold

Application No : 12408649

Filed : 20-Mar-2009

Attorney Docket No : 000409.000004

DECISION ON REQUEST TO WITHDRAW AS ATTORNEY/AGENTOF RECORD

This is an electronic decision on the Request to Withdraw as attorney or agent of record under 37 CFR § 1.36(b), filed October 19,2011

The request is **APPROVED.**

The request was signed by Edward J. Marshall (registration no. 45395) on behalf of all attorneys/agents associated with Customer Number 87457 . All attorneys/agents associated with Cusotmer Number 87457 have been withdrawn.

Since there are no remaining attorneys of record, all future communications from the Office will be directed to the first named inventor or assignee that has properly made itself of record pursuant to 37 CFR 3.71, with correspondence address:

Name	Jeffrey Herold, West Coast Trends
Name2	
Address 1	17811 Jamestown Lane
Address 2	
City	Huntington Beach
State	CA
Postal Code	92647
Country	US

As a reminder, requester is required to inform the first named inventor or assignee that has properly made itself of record pursuant to 37 CFR 3.71 of the electronically processed petition.

Telephone inquiries concerning this decision should be directed to the Patent Electronic Business Center (EBC) at 866-217-9197.

Office of Petitions

UNITED STATES PATENT AND TRADEMARK OFFICE

Commissioner for Patents
United States Patent and Trademark Office
P.O. Box 1450
Alexandria, VA 22313-1450
www.uspto.gov

MUNCY, GEISSLER, OLDS & LOWE, PLLC
4000 LEGATO ROAD
SUITE 310
FAIRFAX VA 22033

MAILED
MAY 04 2011
OFFICE OF PETITIONS

In re Application of :
Chang-Pin Wang :
Application No. 12/408,666 : DECISION ON PETITION
Filed: March 20, 2009 :
Attorney Docket No. **4413/0277PUS1** :

This is a decision on the petition under the unintentional provisions of 37 CFR 1.137(b), filed December 29, 2010, to revive the above-identified application.

The petition is **GRANTED**.

This application became abandoned for failure to timely pay the issue and publication fees on or before October 19, 2010, as required by the Notice of Allowance and Fee(s) Due, mailed July 19, 2010. Accordingly, the date of abandonment of this application is October 20, 2010.

The petition satisfies the requirements of 37 CFR 1.137(b) in that petitioner has supplied (1) the reply in the form of payment of the issue fee of $755 and the publication fee of $300, (2) the petition fee of $810; and (3) a proper statement of unintentional delay. Accordingly, the Issue Fee is accepted as having been unintentionally delayed.

Telephone inquiries concerning this decision should be directed to Tredelle D. Jackson at (571) 272-2783.

This application is being referred to the Office of Data Management for processing into a patent.

Ramesh Krishnamurthy
Petitions Examiner
Office of Petitions

UNITED STATES PATENT AND TRADEMARK OFFICE

UNITED STATES DEPARTMENT OF COMMERCE
United States Patent and Trademark Office
Address: COMMISSIONER FOR PATENTS
P.O. Box 1450
Alexandria, Virginia 22313-1450
www.uspto.gov

APPLICATION NO.	FILING DATE	FIRST NAMED INVENTOR	ATTORNEY DOCKET NO.	CONFIRMATION NO.
12/408,689	03/21/2009	Isao Tsuyama	1924.83843	9975

7590 09/08/2010

GREER, BURNS & CRAIN
300 S WACKER DR
25TH FLOOR
CHICAGO, IL 60606

EXAMINER	
YOUNG, WAYNE R	
ART UNIT	**PAPER NUMBER**
2627	
MAIL DATE	**DELIVERY MODE**
09/08/2010	PAPER

DECISION GRANTING PETITION UNDER 37 CFR 1.138(d)

The declaration of express abandonment is recognized

This is in response to the petition under 37 CFR 1.138(d), requesting for a refund of any previously paid search fee and excess claims fee in the above-identified application.

The petition is granted.

The express abandonment is recognized. Any previously paid search fee and excess claims fee are hereby refunded.

Telephone inquiries should be directed to the Office of Data Management at (571) 272-4200.

Mimi Farmer

Patent Publication Branch
Office of Data Management

UNITED STATES PATENT AND TRADEMARK OFFICE

Commissioner for Patents
United States Patent and Trademark Office
P.O. Box 1450
Alexandria, VA 22313-1450
www.uspto.gov

LAW OFFICES OF JERRY A. SCHULMAN
ONE SOUTH 376 SUMMIT AVENUE, COURT C
OAKBROOK TERRACE, IL 60181

MAILED

MAR 23 2011

OFFICE OF PETITIONS

In re Application of :
Ravi NALLAKRISHNAN :
Application No. 12/408,715 : DECISION ON PETITION
Filed: March 22, 2009 : UNDER 37 CFR 1.137(b)
Attorney Docket No. **10007-2-164** :

This is a decision on the petition under the unintentional provisions of 37 CFR 1.137(b), filed September 3, 2010, to revive the above-identified application.

The petition is **GRANTED**.

The application became abandoned for failure to reply in a timely manner to the Notice to File Missing Parts of Nonprovisional Application (Notice), mailed April 15, 2009. The Notice set a period for reply of two (2) months from the mail date of the Notice. No extensions of time under the provisions of 37 CFR 1.136(a) were obtained. Accordingly, the application became abandoned on June 16, 2009.

The petition satisfies the requirements of 37 CFR 1.137(b) in that petitioner has supplied (1) the reply in the form of the additional claim fee of $220, (2) the petition fee of $810; and (3) an adequate statement of unintentional delay.

Telephone inquiries concerning this decision should be directed to Monica A. Graves at (571) 272-7253.

This application is being referred to Office of Patent Application Processing for appropriate action on the reply received.

Thurman K. Page
Petitions Examiner
Office of Petitions

UNITED STATES PATENT AND TRADEMARK OFFICE

Commissioner for Patents
United States Patent and Trademark Office
P.O. Box 1450
Alexandria, VA 22313-1450
www.uspto.gov

BERRY & ASSOCIATES P.C.
9229 SUNSET BOULEVARD
SUITE 630
LOS ANGELES CA 90069

MAILED
SEP 30 2011
OFFICE OF PETITIONS

In re Application of

Raff

Application No. 12/408,733

Filed: March 23, 2009

Attorney Docket No. **2903.ACCESS.ASA.DIV2**

DECISION ON PETITION

This is a decision on the petition under 37 CFR 1.181(a) to withdraw the holding of abandonment, filed September 21, 2011.

The petition under 37 CFR 1.181(a) to withdraw the holding of abandonment is **granted**.

This application was held abandoned on August 24, 2011, after it was believed that no response was received to the Notice of Allowance and Issue Fee Due mailed May 23, 2011. The notice allowed a statutory period for reply of three (3) months from its mailing date. Extensions of the time set for reply were available pursuant to 37 CFR 1.136(a). A Notice of Abandonment was mailed on September 8, 2011, indicating that a reply to the Notice of Allowance and Issue Fee Due was not received.

Petitioner states that Form PTOL-85b authorizing the issue fee and publication fee to be charged to a deposit account was deposited with the United States Postal Service, first class mail on August 23, 2011. A review of the application file reveals that Form PTOL-85(b) "Issue Fee Transmittal", filed September 6, 2011, contained a certificate of mailing under 37 CFR 1.8 dated August 23, 2011. Based on the aforementioned, it appears that the application was improperly held abandoned as a proper response was received prior to expiration of the period for reply. The holding of abandonment is withdrawn, accordingly.

The issue and publication fees were charged to the authorized deposit account on September 6, 2011.

The application file is being directed to the Office of Data Management for further processing.

Further inquires regarding this decision may be directed to the undersigned at (571) 272-3222.

/Kenya A. McLaughlin/

Kenya A. McLaughlin
Petitions Attorney
Office of Petitions

UNITED STATES PATENT AND TRADEMARK OFFICE

Commissioner for Patents
United States Patent and Trademark Office
P.O. Box 1450
Alexandria, VA 22313-1450
www.uspto.gov

BANNER & WITCOFF, LTD.
ATTORNEYS FOR CLIENT NO. 016689
1100 13th STREET, N.W.
SUITE 1200
WASHINGTON DC 20005-4051

MAILED
NOV 22 2010
OFFICE OF PETITIONS

In re Application of	:	
Junki Ueyama	:	
Application No. 12/408,743	:	DECISION ON PETITION
Filed: March 23, 2009	:	
Attorney Docket No. 006760.00167	:	

This is a decision on the petition under the unintentional provisions of 37 CFR 1.137(b), filed September 16, 2010, to revive the above-identified application.

The petition is **GRANTED**.

The application became abandoned for failure to timely reply within the meaning of 37 CFR 1.113 to the final Office action, mailed March 1, 2009, which set a shortened statutory period for reply of three (3) months. No extensions of time under the provisions of 37 CFR 1.136(a) were obtained. Accordingly, the application became abandoned on June 2, 2009. The Notice of Abandonment was mailed September 14, 2009.

The petition satisfies the requirements of 37 CFR 1.137(b) in that petitioner has supplied (1) the reply in the form of an amendment that *prima facia* places the application in condition for allowance, (2) the petition fee of $1,620, and (3) a proper statement of unintentional delay.

Telephone inquiries concerning this decision should be directed to Terri Johnson at (571) 272-2991.

This application is being referred to Technology Center AU 3653 for appropriate action by the Examiner in the normal course of business on the reply received.

/Terri Johnson/
Terri Johnson
Petitions Examiner
Office of Petitions

UNITED STATES PATENT AND TRADEMARK OFFICE

UNITED STATES DEPARTMENT OF COMMERCE
United States Patent and Trademark Office
Address: COMMISSIONER FOR PATENTS
P.O. Box 1450
Alexandria, Virginia 22313-1450
www.uspto.gov

APPLICATION NO.	FILING DATE	FIRST NAMED INVENTOR	ATTORNEY DOCKET NO.	CONFIRMATION NO.
12/408,807	03/23/2009	Glenn R. Bowers	71857_US_NP	1244

30279 7590 01/09/2012

DANA REWOLDT
Syngenta Biotechnology, Inc.
3054 E. Cornwallis Road
Durham, NC 27709

EXAMINER	
KUBELIK, ANNE R	

ART UNIT	PAPER NUMBER
1638	

NOTIFICATION DATE	DELIVERY MODE
01/09/2012	ELECTRONIC

Please find below and/or attached an Office communication concerning this application or proceeding.

The time period for reply, if any, is set in the attached communication.

Notice of the Office communication was sent electronically on above-indicated "Notification Date" to the following e-mail address(es):

ip.sbi@syngenta.com

UNITED STATES PATENT AND TRADEMARK OFFICE

Commissioner for Patents
United States Patent and Trademark Office
P.O. Box 1450
Alexandria, VA 22313-1450
www.uspto.gov

JAN 0 9 2012

DANA REWOLDT
Syngenta Biotechnology, Inc.
3054 E. Cornwallis Road
Durham NC 27709

In re Application of:
Bowers et al.
Serial No.: 12/408,807
Filed: March 23, 2009
Attorney Docket No.: **71857_US_NP**

: PETITION DECISION

This is in response to the renewed petition under 37 CFR § 1.59(b), filed December 22, 2011, to expunge information from the above identified application. This application has been allowed.

Petitioner requests that the material submitted to the Patent Office on September 13, 2010 be expunged from the record. Petitioner states either: (A) that the information contains trade secret material, proprietary material and/or material that is subject to a protective order which has not been made public; or (B) that the information submitted was unintentionally submitted and the failure to obtain its return would cause irreparable harm to the party who submitted the information or to the party in interest on whose behalf the information was submitted, and the information has not otherwise been made public. The petition fee set forth in 37 CFR § 1.17(g) has been paid.

The reasons set forth in this petition establishes to the satisfaction of the Director that expungement of the information is appropriate. The file entry for this document has been closed and as such the document is no longer publicly available, which is the IFW equivalent to removal of a paper document from a paper file wrapper.

Therefore, petitioner's petition is GRANTED.

Should there be any questions about this decision please contact Marianne C. Seidel by letter addressed to Director, TC 1600, at the address listed above, or by telephone at 571-272-0584 or by facsimile sent to the general Office facsimile number, 571-273-8300.

/MC Seidel/
Marianne C. Seidel, Quality Assurance Specialist
Technology Center 1600

UNITED STATES PATENT AND TRADEMARK OFFICE

Commissioner for Patents
United States Patent and Trademark Office
P.O. Box 1450
Alexandria, VA 22313-1450
www.uspto.gov

MURATA MANUFACTURING COMPANY, LTD.
C/O KEATING & BENNETT, LLP
1800 Alexander Bell Drive, SUITE 200
Reston, VA 20191

MAILED

MAR 28 2011

OFFICE OF PETITIONS

In re Application of
Hajime KANDO
Application No. 12/408,813
Filed: March 23, 2009
Attorney Docket No. **36856.1796**

DECISION GRANTING PETITION
UNDER 37 CFR 1.313(c)(2)

This is a decision on the petition under 37 CFR 1.313(c)(2), filed March 24, 2011, to withdraw the above-identified application from issue after payment of the issue fee.

The petition is **GRANTED**.

The above-identified application is withdrawn from issue for consideration of a submission under 37 CFR 1.114 (request for continued examination). See 37 CFR 1.313(c)(2).

Petitioner is advised that the issue fee paid on March 1, 2011 cannot be refunded. If, however, this application is again allowed, petitioner may request that it be applied towards the issue fee required by the new Notice of Allowance.[1]

Telephone inquiries should be directed to the undersigned at (571) 272-7253.

This application is being referred to Technology Center AU 2837 for processing of the request for continued examination under 37 CFR 1.114 and for consideration of the concurrently filed information disclosure statement.

/Monica A. Graves/
Petitions Examiner, Office of Petitions

[1] *The request to apply the issue fee to the new Notice may be satisfied by completing and returning the new Part B – Fee(s) Transmittal Form (along with any balance due at the time of submission). Petitioner is advised that the Issue Fee Transmittal Form* ***must*** *be completed and timely submitted to avoid abandonment of the application.*

UNITED STATES PATENT AND TRADEMARK OFFICE

UNITED STATES DEPARTMENT OF COMMERCE
United States Patent and Trademark Office
Address: COMMISSIONER FOR PATENTS
P.O. Box 1450
Alexandria, Virginia 22313-1450
www.uspto.gov

APPLICATION NO.	FILING DATE	FIRST NAMED INVENTOR	ATTORNEY DOCKET NO.	CONFIRMATION NO.
12/408,819	03/23/2009	Takahiro MOCHIHARA	TMCT-12002/08	1271

25006 7590 12/13/2010

GIFFORD, KRASS, SPRINKLE,ANDERSON & CITKOWSKI, P.C
PO BOX 7021
TROY, MI 48007-7021

EXAMINER	
YABUT, DANIEL D	
ART UNIT	PAPER NUMBER
3656	
MAIL DATE	DELIVERY MODE
12/13/2010	PAPER

Please find below and/or attached an Office communication concerning this application or proceeding.

The time period for reply, if any, is set in the attached communication.

UNITED STATES PATENT AND TRADEMARK OFFICE

Commissioner for Patents
United States Patent and Trademark Office
P.O. Box 1450
Alexandria, VA 22313-1450
www.uspto.gov

DEC 13 2010

GIFFORD, KRASS, SPRINKLE,
ANDERSON & CITKOWSKI, P.C
PO BOX 7021
TROY MI 48007-7021

In re application of	:	**DECISION ON REQUEST TO**
Takahiro Mochihara	:	**PARTICIPATE IN PATENT**
Application No. 12/408,819	:	**PROSECUTION HIGHWAY**
Filed: March 23, 2009	:	**PROGRAM AND PETITION**
For: VIBRATION DAMPING DEVICE AND	:	**TO MAKE SPECIAL UNDER**
POWER TRANSMISSION DEVICE	:	**37 CFR 1.102(a)**

This is a decision on the request to participate in the Patent Prosecution Highway (PPH) program and the petition under 37 CFR 1.102(a), filed October 21, 2010, to make the above-identified application special.

The request and petition are **GRANTED**.

A grantable request to participate in the PPH program and petition to make special require:

(1) The U.S. application must validly claim priority under 35 U.S.C. 119(a) to one or more applications filed in the JPO;
(2) Applicant must submit a copy of the allowable/patentable claim(s) from the JPO application(s) along with an English translation thereof and a statement that the English translation is accurate;
(3) All the claims in the U.S. application must sufficiently correspond or be amended to sufficiently correspond to the allowable/patentable claim(s) in the JPO application(s);
(4) Examination of the U.S. application has not begun;
(5) Applicant must submit a copy of the latest Office action from each of the JPO application(s) containing the allowable/patentable claim(s) along with an English translation thereof and a statement that the English translation is accurate;
(6) Applicant must submit an IDS listing the documents cited by the JPO examiner in the JPO Office action along with copies of documents except U.S. patents or U.S. patent application publications; and

In light of the preliminary amendment filed October 21, 2010. The request to participate in the PPH pilot program complies with the above requirements. Therefore, the above-identified application has been accorded "special" status.

All other inquiries concerning the examination or status of the application should be directed to the Patent Application Information Retrieval (PAIR) system.

The application is being forwarded to the examiner for action on the merits commensurate with this decision.

Any inquiry regarding this decision should be directed to Mikado Buiz, Quality Assurance Specialist, at (571) 272-6578.

/ Mikado Buiz /
Mikado Buiz,
Quality Assurance Specialist
Technology Center 3600

BM/BM: 12/10/10

UNITED STATES PATENT AND TRADEMARK OFFICE

Commissioner for Patents
United States Patent and Trademark Office
P.O. Box 1450
Alexandria, VA 22313-1450
www.uspto.gov

ALSTON & BIRD LLP
BANK OF AMERICA PLAZA
101 SOUTH TRYON STREET, SUITE 4000
CHARLOTTE, NC 28280-4000

MAILED

MAR 21 2011

OFFICE OF PETITIONS

In re Application of
Alan Rouse, et al.
Application No. 12/408,831
Filed: March 23, 2009
Attorney Docket No. 043314/368313

DECISION ON PETITION
TO WITHDRAW
FROM RECORD

This is a decision on the Request to Withdraw as attorney or agent of record under 37 C.F.R. § 1.36(b), filed January 26, 2011.

The request is **DISMISSED** as moot.

A review of the file record indicates that the power of attorney to Alston & Bird, LLP has been revoked by the assignee of the patent application on December 30, 2010. Accordingly, the request to withdraw under 37 C.F.R. § 1.36(b) is moot.

All future communications from the Office will continue to be directed to the below-listed address until otherwise notified by applicant.

Telephone inquires concerning this decision should be directed to undersigned at 571-272-1642.

/AMW/
April M. Wise
Petitions Examiner
Office of Petitions

UNITED STATES PATENT AND TRADEMARK OFFICE

Commissioner for Patents
United States Patent and Trademark Office
P.O. Box 1450
Alexandria, VA 22313-1450
www.uspto.gov

LAW OFFICES OF JOHN DE LA ROSA
375 UPPER MOUNTAIN AVE
MONTCLAIR NJ 07043

MAILED

DEC 20 2010

OFFICE OF PETITIONS

In re Application of
Michael A. Greco
Application No. 12/408,845
Filed: March 23, 2009
Attorney Docket No. Greco-105

DECISION ON PETITION
TO WITHDRAW
FROM RECORD

This is a decision on the Request to Withdraw as attorney or agent of record under 37 C.F.R. § 1.36(b), filed November 9, 2010.

The request is **APPROVED**.

A grantable request to withdraw as attorney/agent of record must be signed by every attorney/agent seeking to withdraw or contain a clear indication that one attorney is signing on behalf of another/others. A request to withdraw will not be approved unless at least 30 (thirty) days would remain between the date of approval and the later of the expiration date of a time to file a response or the expiration date of the maximum time period which can be extended under 37 C.F.R. § 1.136(a).

The request was signed by John de la Rosa on behalf of all attorneys/agents associated with customer number 27771. All attorneys/agents associated with customer number 27771 have been withdrawn.

The correspondence address has been changed and is copied below.

Telephone inquiries concerning this decision should be directed to Kimberly Inabinet at 571-272-4618.

/Kimberly Inabinet/

Kimberly Inabinet
Petitions Examiner
Office of Petitions

cc: Michael A. Greco
1853 Cropsey Avenue
Brooklyn, NY 11214

UNITED STATES PATENT AND TRADEMARK OFFICE

UNITED STATES DEPARTMENT OF COMMERCE
United States Patent and Trademark Office
Address: COMMISSIONER FOR PATENTS
P.O. Box 1450
Alexandria, Virginia 22313-1450
www.uspto.gov

APPLICATION NUMBER	FILING OR 371(C) DATE	FIRST NAMED APPLICANT	ATTY. DOCKET NO./TITLE
12/408,845	03/23/2009	MICHAEL A. GRECO	Greco-105

CONFIRMATION NO. 1312

27771
LAW OFFICES OF JOHN DE LA ROSA
375 UPPER MOUNTAIN AVE
MONTCLAIR, NJ 07043

POWER OF ATTORNEY NOTICE

OC000000044825551

Date Mailed: 12/06/2010

NOTICE REGARDING CHANGE OF POWER OF ATTORNEY

This is in response to the Power of Attorney filed 11/09/2010.

- The withdrawal as attorney in this application has been accepted. Future correspondence will be mailed to the new address of record. 37 CFR 1.33.

/kainabinet/

Office of Data Management, Application Assistance Unit (571) 272-4000, or (571) 272-4200, or 1-888-786-0101

UNITED STATES PATENT AND TRADEMARK OFFICE

UNITED STATES DEPARTMENT OF COMMERCE
United States Patent and Trademark Office
Address: COMMISSIONER FOR PATENTS
P.O. Box 1450
Alexandria, Virginia 22313-1450
www.uspto.gov

APPLICATION NO.	FILING DATE	FIRST NAMED INVENTOR	ATTORNEY DOCKET NO.	CONFIRMATION NO.
12/408,871	03/23/2009	Kuniaki NIIMI	340062US26	1356

22850 7590 11/19/2010

OBLON, SPIVAK, MCCLELLAND MAIER & NEUSTADT, L.L.P.
1940 DUKE STREET
ALEXANDRIA, VA 22314

EXAMINER	
VO, HIEU T	

ART UNIT	PAPER NUMBER
3747	

NOTIFICATION DATE	DELIVERY MODE
11/19/2010	ELECTRONIC

Please find below and/or attached an Office communication concerning this application or proceeding.

The time period for reply, if any, is set in the attached communication.

Notice of the Office communication was sent electronically on above-indicated "Notification Date" to the following e-mail address(es):

patentdocket@oblon.com
oblonpat@oblon.com
jgardner@oblon.com

UNITED STATES PATENT AND TRADEMARK OFFICE

Commissioner for Patents
United States Patent and Trademark Office
P.O. Box 1450
Alexandria, VA 22313-1450
www.uspto.gov

OBLON, SPIVAK, MCCLELLAND MAIER & NEUSTADT, L.L.P.
1940 DUKE STREET
ALEXANDRIA VA 22314

In re Application of	:	
NIIMI, KUNIAKI	:	DECISION ON REQUEST TO
Application No. 12/408,871	:	PARTICIPATE IN PATENT
Filed: March 23, 2009	:	PCT/PROSECUTION HIGHWAY
Attorney Docket No. 340062US26	:	PROGRAM AND PETITION
For: CONTROL APPARATUS AND CONTROL METHOD FOR VEHICLE	:	37 CFR 1.102(d)

This is a decision on the request to participate in the Patent Prosecution Highway (PPH) program and the petition under 37 CFR 1.102(d), filed November 17, 2010, to make the above-identified application special.

The request and petition are granted.

A grantable request to participate in the PPH pilot program and petition to make special require:

(1) The U.S. application must validly claim priority under 35 U.S.C. 119(a) to one or more applications filed in the JPO;
(2) Applicant must submit a copy of the allowable/patentable claim(s) from the JPO/PCT application(s) along with an English translation thereof and a statement that the English translation is accurate;
(3) All the claims in the U.S. application must sufficiently correspond or be amended to sufficiently correspond to the allowable/patentable claim(s) in the JPO application(s);
(4) Examination of the U.S. application has not begun;
(5) Applicant must submit a copy of all the office actions from each of the JPO/PCT application(s) containing the allowable/patentable claim(s) along with an English translation thereof and a statement that the English translation is accurate; and
(6) Applicant must submit an IDS listing the documents cited by the JPO examiner in the JPO office action along with copies of documents except U.S. patents or U.S. patent application publications.

In light of the petition being properly submitted, the request to participate in the PPH program and the petition comply with the above requirements. Accordingly, the above-identified application has been accorded "special" status.

The applicant is encouraged to cite and submit all relevant prior art references, if any, to facilitate examination in this application. This application will be forwarded to an examiner for examination.

Telephone inquiries concerning this decision should be directed to Henry C. Yuen at 571-272-4856. All other inquiries concerning the examination or status of the application should be directed to Steve Cronin, SPE of Art Unit 3747, and 571-272-4536 for Class 701/102 and also accessible in the PAIR system at http://www.uspto.gov/ebc.index.html.

Petition is **granted**.

/Henry C. Yuen/

_____

Henry C. Yuen, Special Programs Examiner
Technology Center 3700 – Mechanical Engineering,
Manufacturing and Products
571-272-4856

SPE RESPONSE FOR CERTIFICATE OF CORRECTION

Paper No.: _____

DATE : 11-05-11

TO SPE OF : ART UNIT 3612

SUBJECT : Request for Certificate of Correction for Appl. No.: 12/408889 Patent No.: 7950732

CofC mailroom date: 10-27-11

Please respond to this request for a certificate of correction within 7 days.

FOR IFW FILES:

Please review the requested changes/corrections as shown in the **COCIN** document(s) in the IFW application image. No new matter should be introduced, nor should the scope or meaning of the claims be changed.

Please complete the response (see below) and forward the completed response to scanning using document code **COCX**.

FOR PAPER FILES:

Please review the requested changes/corrections as shown in the attached certificate of correction. Please complete this form (see below) and forward it with the file to:

Certificates of Correction Branch (CofC)
Randolph Square – 9D10-A
Palm Location 7580

Certificates of Correction Branch

Angela Green

Thank You For Your Assistance

The request for issuing the above-identified correction(s) is hereby:

Note your decision on the appropriate box.

☑	**Approved**	**All** changes apply.
☐	**Approved in Part**	Specify below which changes **do not** apply.
☐	**Denied**	State the reasons for denial below.

Comments: _____

D. GLENN DAYOAN
SUPERVISORY PATENT EXAMINER
TECHNOLOGY CENTER 3600

SPE

3612
Art Unit

UNITED STATES PATENT AND TRADEMARK OFFICE

Commissioner for Patents
United States Patent and Trademark Office
P.O. Box 1450
Alexandria, VA 22313-1450
www.uspto.gov

DAVID J COLE
E INK CORPORATION
733 CONCORD AVE
CAMBRIDGE, MA 02138-1002

MAILED
SEP 30 2011
OFFICE OF PETITIONS

In re Application of
Alain Bouchard
Application No. 12/408,911
Filed: March 23, 2009
Attorney Docket No.: H-508

ON PETITION

This is a decision on the petition, filed September 21, 2011, to revive the above-identified application under the provisions of 37 CFR 1.137(b).

There is no indication that the person signing the petition was ever given a power of attorney to prosecute the application. However, in accordance with 37 CFR 1.34(a), the signature of Steven L. Nichols appearing on the petition shall constitute a representation to the United States Patent and Trademark Office that he is authorized to represent the particular party on whose behalf he acts.

The petition is GRANTED.

This application became abandoned for failure to timely pay the issue fee and publication fee on or before September 13, 2011, as required by the Notice of Allowance and Fee(s) Due, mailed June 13, 2011. A Notice of Abandonment was subsequently mailed on September 27, 2011.

The petition satisfies the requirements of 37 CFR 1.137(b) in that petitioner has supplied (1) the reply in the form of payment of the issue fee of $1,510 and the publication fee of $300, (2) the petition fee of $1,620; and (3) an adequate statement of unintentional delay[1].

The application is being referred to the Office of Data Management to be processed into a patent.

Telephone inquires related to this decision should be directed to the undersigned at (571) 272-3204. Telephone inquiries related to processing as a patent should be directed to (571) 272-4200.

/SDB/

Sherry D. Brinkley
Petitions Examiner
Office of Petitions

[1] 37 CFR 1.137(b)(3) requires a statement that the entire delay in filing the required reply from the due date for the reply until the filing of a grantable petition pursuant to 37 CFR 1.137(b) was unintentional. While the statement is not made by an attorney of record, such statement is being treated as having been made as the result of a reasonable inquiry into the facts and circumstances of such delay. See 37 CFR 10.18(b) and Changes to Patent Practice and Procedure; Final Rule Notice, 62 Fed. Reg. 53131, 53178 (October 10, 1997), 1203 Off. Gaz. Pat. Office 63, 103 (October 21, 1997). In the event that such an inquiry has not been made, petitioner must make such an inquiry. If such inquiry results in the discovery that it is not correct that the entire delay in filing the required reply from the due date for the reply until the filing of a grantable petition pursuant to 37 CFR 1.137(b) was unintentional, petitioner must notify the Office.

UNITED STATES PATENT AND TRADEMARK OFFICE

UNITED STATES DEPARTMENT OF COMMERCE
United States Patent and Trademark Office
Address: COMMISSIONER FOR PATENTS
P.O. Box 1450
Alexandria, Virginia 22313-1450
www.uspto.gov

APPLICATION NO.	FILING DATE	FIRST NAMED INVENTOR	ATTORNEY DOCKET NO.	CONFIRMATION NO.
12/408,969	03/23/2009	Chi-Yang Chiu	10125681	1527

7590 04/22/2011

QUINTERO LAW OFFICE, PC
615 Hampton Dr, Suite A202
Venice, CA 90291

EXAMINER	
PARSONS, THOMAS H	

ART UNIT	PAPER NUMBER
1729	

NOTIFICATION DATE	DELIVERY MODE
04/22/2011	ELECTRONIC

DECISION GRANTING PETITION UNDER 37 CFR 1.138(d)

The declaration of express abandonment is recognized

This is in response to the petition under 37 CFR 1.138(d), requesting for a refund of any previously paid search fee and excess claims fee in the above-identified application.

The petition is granted.

The express abandonment is recognized. Any previously paid search fee and excess claims fee are hereby refunded.

Telephone inquiries should be directed to the Office of Data Management at (571) 272-4200.

Nimi James

Patent Publication Branch
Office of Data Management

UNITED STATES PATENT AND TRADEMARK OFFICE

UNITED STATES DEPARTMENT OF COMMERCE
United States Patent and Trademark Office
Address: COMMISSIONER FOR PATENTS
P.O. Box 1450
Alexandria, Virginia 22313-1450
www.uspto.gov

APPLICATION NO.	FILING DATE	FIRST NAMED INVENTOR	ATTORNEY DOCKET NO.	CONFIRMATION NO.
12/408,984	03/23/2009	Yusuke Tuda	008312-0379400	1543

7590 08/26/2010

PILLSBURY WINTHROP SHAW PITTMAN, LLP
P.O. BOX 10500
MCLEAN, VA 22102

EXAMINER	
BARRON JR, GILBERTO	

ART UNIT	PAPER NUMBER
2432	

MAIL DATE	DELIVERY MODE
08/26/2010	PAPER

DECISION GRANTING PETITION UNDER 37 CFR 1.138(d)

The declaration of express abandonment is recognized

This is in response to the petition under 37 CFR 1.138(d), requesting for a refund of any previously paid search fee and excess claims fee in the above-identified application.

The petition is granted.

The express abandonment is recognized. Any previously paid search fee and excess claims fee are hereby refunded.

Telephone inquiries should be directed to the Office of Data Management at (571) 272-4200.

Patent Publication Branch
Office of Data Management

UNITED STATES PATENT AND TRADEMARK OFFICE

UNITED STATES DEPARTMENT OF COMMERCE
United States Patent and Trademark Office
Address: COMMISSIONER FOR PATENTS
P.O. Box 1450
Alexandria, Virginia 22313-1450
www.uspto.gov

APPLICATION NO.	FILING DATE	FIRST NAMED INVENTOR	ATTORNEY DOCKET NO.	CONFIRMATION NO.
12/409,024	03/23/2009	Glenn R. Bowers	S08-05KG030123	1610

30279 7590 01/09/2012

DANA REWOLDT
Syngenta Biotechnology, Inc.
3054 E. Cornwallis Road
Durham, NC 27709

EXAMINER	
KUBELIK, ANNE R	
ART UNIT	**PAPER NUMBER**
1638	

NOTIFICATION DATE	DELIVERY MODE
01/09/2012	ELECTRONIC

Please find below and/or attached an Office communication concerning this application or proceeding.

The time period for reply, if any, is set in the attached communication.

Notice of the Office communication was sent electronically on above-indicated "Notification Date" to the following e-mail address(es):

ip.sbi@syngenta.com

UNITED STATES PATENT AND TRADEMARK OFFICE

Commissioner for Patents
United States Patent and Trademark Office
P.O. Box 1450
Alexandria, VA 22313-1450
www.uspto.gov

JAN 0 9 2012

DANA REWOLDT
Syngenta Biotechnology, Inc.
3054 E. Cornwallis Road
Durham NC 27709

In re Application of:
Bowers et al.
Serial No.: 12/409,024
Filed: March 23, 2009
Attorney Docket No.: **S08-05KG030123**

: PETITION DECISION

This is in response to the renewed petition under 37 CFR § 1.59(b), filed December 22, 2011, to expunge information from the above identified application. This application has been allowed.

Petitioner requests that the material submitted to the Patent Office on September 28, 2010 be expunged from the record. Petitioner states either: (A) that the information contains trade secret material, proprietary material and/or material that is subject to a protective order which has not been made public; or (B) that the information submitted was unintentionally submitted and the failure to obtain its return would cause irreparable harm to the party who submitted the information or to the party in interest on whose behalf the information was submitted, and the information has not otherwise been made public. The petition fee set forth in 37 CFR § 1.17(g) has been paid.

The reasons set forth in this petition establishes to the satisfaction of the Director that expungement of the information is appropriate. The file entry for this document has been closed and as such the document is no longer publicly available, which is the IFW equivalent to removal of a paper document from a paper file wrapper.

Therefore, petitioner's petition is GRANTED.

Should there be any questions about this decision please contact Marianne C. Seidel by letter addressed to Director, TC 1600, at the address listed above, or by telephone at 571-272-0584 or by facsimile sent to the general Office facsimile number, 571-273-8300.

/MC Seidel/
Marianne C. Seidel, Quality Assurance Specialist
Technology Center 1600

UNITED STATES PATENT AND TRADEMARK OFFICE

COMMISSIONER FOR PATENTS
UNITED STATES PATENT AND TRADEMARK OFFICE
P.O. BOX 1450
ALEXANDRIA, VA 22313-1450
www.uspto.gov

THOMAS, KAYDEN, HORSTEMEYER & RISLEY, LLP
600 GALLERIA PARKWAY, S.E.
STE 1500
ATLANTA GA 30339-5994

MAILED

MAR 11 2011

OFFICE OF PETITIONS

In re Patent No. 7,817,408 :
Issue Date: October 19, 2010 :
Application No. 12/409,050 : ON PETITION
Filed: March 23, 2009 :
Attorney Docket No. 250148-1680 :

This is a decision on the petition filed February 9, 2011, which is being treated as a request under 37 CFR 3.81(b)[1] to correct the name of the assignee on the front page of the above-identified patent by way of a Certificate of Correction.

The request is GRANTED.

Telephone inquiries concerning this decision may be directed to the undersigned at (571) 272-3205. Inquiries regarding the issuance of a certificate of correction should be directed to the Certificate of Correction Branch at (571) 272-4200.

The Certificates of Correction Branch will be notified of this decision granting the petition under 37 CFR 3.81(b) and directing issuance of the requested Certificate of Correction.

/ALESIA M. BROWN/

Alesia M. Brown
Attorney Advisor
Office of Petitions

[1] *See* MPEP 1309, subsection II; and Official Gazette of June 22, 2004.

UNITED STATES PATENT AND TRADEMARK OFFICE

UNITED STATES DEPARTMENT OF COMMERCE
United States Patent and Trademark Office
Address: COMMISSIONER FOR PATENTS
P.O. Box 1450
Alexandria, Virginia 22313-1450
www.uspto.gov

APPLICATION NO.	FILING DATE	FIRST NAMED INVENTOR	ATTORNEY DOCKET NO.	CONFIRMATION NO.
12/409,061	03/23/2009	Kurt Milan Lindenbaum	S08-05KL115639	1680

30279 7590 01/20/2012

DANA REWOLDT
Syngenta Biotechnology, Inc.
3054 E. Cornwallis Road
Durham, NC 27709

EXAMINER	
KUBELIK, ANNE R	
ART UNIT	PAPER NUMBER
1638	

NOTIFICATION DATE	DELIVERY MODE
01/20/2012	ELECTRONIC

Please find below and/or attached an Office communication concerning this application or proceeding.

The time period for reply, if any, is set in the attached communication.

Notice of the Office communication was sent electronically on above-indicated "Notification Date" to the following e-mail address(es):

ip.sbi@syngenta.com

UNITED STATES PATENT AND TRADEMARK OFFICE

Commissioner for Patents
United States Patent and Trademark Office
P.O. Box 1450
Alexandria, VA 22313-1450
www.uspto.gov

JAN 20 2012

DANA REWOLDT
Syngenta Biotechnology, Inc.
3054 E. Cornwallis Road
Durham NC 27709

In re Application of:
Lindenbaum et al.
Serial No.: 12/409,061
Filed: March 23, 2009
Attorney Docket No.: **S08-05KL115639**

: PETITION DECISION

This is in response to the renewed petition under 37 CFR § 1.59(b), filed January 13, 2012, to expunge information from the above identified application. This application has been allowed.

Petitioner requests that the material submitted to the Patent Office on January 24, 2011 be expunged from the record. Petitioner states either: (A) that the information contains trade secret material, proprietary material and/or material that is subject to a protective order which has not been made public; or (B) that the information submitted was unintentionally submitted and the failure to obtain its return would cause irreparable harm to the party who submitted the information or to the party in interest on whose behalf the information was submitted, and the information has not otherwise been made public. The petition fee set forth in 37 CFR § 1.17(g) has been paid.

The reasons set forth in this petition establishes to the satisfaction of the Director that expungement of the information is appropriate. The file entry for this document has been closed and as such the document is no longer publicly available, which is the IFW equivalent to removal of a paper document from a paper file wrapper.

Therefore, petitioner's petition is GRANTED.

Should there be any questions about this decision please contact Marianne C. Seidel by letter addressed to Director, TC 1600, at the address listed above, or by telephone at 571-272-0584 or by facsimile sent to the general Office facsimile number, 571-273-8300.

/MC Seidel/
Marianne C. Seidel, Quality Assurance Specialist
Technology Center 1600

SPE RESPONSE FOR CERTIFICATE OF CORRECTION

Paper No.: _____

DATE : 2/1/12

TO SPE OF : ART UNIT: 3721

SUBJECT : Request for Certificate of Correction for Appl. No.: 12/409,073 Patent No. 7,954,306

CofC mailroom date 1/25/12

Please respond to this request for a certificate of correction within 7 days.

FOR IFW FILES:

Please review the requested changes/corrections as shown in the **COCIN** document(s) in the IFW application image. No new matter should be introduced, nor should the scope or meaning of the claims be changed.

Please complete the response (see below) and forward the completed response to scanning using document code **COCX**.

FOR PAPER FILES:

Please review the requested changes/corrections as shown in the attached certificate of correction. Please complete this form (see below) and forward it with the file to:

Certificates of Correction Branch (CofC)
Randolph Square – 9D10-A
Palm Location 7580

Ernest C. White, LIE

Certificates of Correction Branch

703-756-1814 _____

Thank You For Your Assistance

The request for issuing the above-identified correction(s) is hereby:

Note your decision on the appropriate box.

X **Approved**	**All** changes apply.
☐ **Approved in Part**	Specify below which changes **do not** apply.
☐ **Denied**	State the reasons for denial below.

Comments: _____

_____

_____

_____

/ Gloria R. Weeks / 02/02/2012
SPE **Art Unit**

UNITED STATES PATENT AND TRADEMARK OFFICE

UNITED STATES DEPARTMENT OF COMMERCE
United States Patent and Trademark Office
Address: COMMISSIONER FOR PATENTS
P.O. Box 1450
Alexandria, Virginia 22313-1450
www.uspto.gov

APPLICATION NO.	FILING DATE	FIRST NAMED INVENTOR	ATTORNEY DOCKET NO.	CONFIRMATION NO.
12/409,100	03/23/2009	Kurt Milan Lindenbaum	71845_US_NP	1735

30279 7590 03/08/2012

DANA REWOLDT
Syngenta Biotechnology, Inc.
3054 E. Cornwallis Road
Durham, NC 27709

EXAMINER	
KUBELIK, ANNE R	
ART UNIT	PAPER NUMBER
1638	

NOTIFICATION DATE	DELIVERY MODE
03/08/2012	ELECTRONIC

Please find below and/or attached an Office communication concerning this application or proceeding.

The time period for reply, if any, is set in the attached communication.

Notice of the Office communication was sent electronically on above-indicated "Notification Date" to the following e-mail address(es):

ip.sbi@syngenta.com

UNITED STATES PATENT AND TRADEMARK OFFICE

Commissioner for Patents
United States Patent and Trademark Office
P.O. Box 1450
Alexandria, VA 22313-1450
www.uspto.gov

MAR 0 8 2012

DANA REWOLDT
Syngenta Biotechnology, Inc.
3054 E. Cornwallis Road
Durham NC 27709

In re Application of:
Kurt M. Lindenbaum
Serial No.: 12/409,100
Filed: February 23, 2009
Attorney Docket No.: **71845_US_NP**

: PETITION DECISION

This is in response to the renewed petition under 37 CFR § 1.59(b), filed February 27, 2012, to expunge information from the above identified application. This application has been allowed.

Petitioner requests that the material submitted to the Patent Office on March 29, 2011 be expunged from the record. Petitioner states either: (A) that the information contains trade secret material, proprietary material and/or material that is subject to a protective order which has not been made public; or (B) that the information submitted was unintentionally submitted and the failure to obtain its return would cause irreparable harm to the party who submitted the information or to the party in interest on whose behalf the information was submitted, and the information has not otherwise been made public. The petition fee set forth in 37 CFR § 1.17(g) has been paid.

The reasons set forth in this petition establishes to the satisfaction of the Director that expungement of the information is appropriate. The file entry for this document has been closed and as such the document is no longer publicly available, which is the IFW equivalent to removal of a paper document from a paper file wrapper.

Therefore, petitioner's petition is GRANTED.

Should there be any questions about this decision please contact Marianne C. Seidel by letter addressed to Director, TC 1600, at the address listed above, or by telephone at 571-272-0584 or by facsimile sent to the general Office facsimile number, 571-273-8300.

/MC Seidel/
Marianne C. Seidel, Quality Assurance Specialist
Technology Center 1600

UNITED STATES PATENT AND TRADEMARK OFFICE

UNITED STATES DEPARTMENT OF COMMERCE
United States Patent and Trademark Office
Address: COMMISSIONER FOR PATENTS
P.O. Box 1450
Alexandria, Virginia 22313-1450
www.uspto.gov

APPLICATION NO.	FILING DATE	FIRST NAMED INVENTOR	ATTORNEY DOCKET NO.	CONFIRMATION NO.
12/409,135	03/23/2009	Kurt Milan Lindenbaum	S08-05KL135089	1784

30279 7590 02/21/2012

DANA REWOLDT
Syngenta Biotechnology, Inc.
3054 E. Cornwallis Road
Durham, NC 27709

EXAMINER	
COLLINS, CYNTHIA E	
ART UNIT	PAPER NUMBER
1638	

NOTIFICATION DATE	DELIVERY MODE
02/21/2012	ELECTRONIC

Please find below and/or attached an Office communication concerning this application or proceeding.

The time period for reply, if any, is set in the attached communication.

Notice of the Office communication was sent electronically on above-indicated "Notification Date" to the following e-mail address(es):

ip.sbi@syngenta.com

UNITED STATES PATENT AND TRADEMARK OFFICE

Commissioner for Patents
United States Patent and Trademark Office
P.O. Box 1450
Alexandria, VA 22313-1450
www.uspto.gov

FEB 2 1 2012

DANA REWOLDT
Syngenta Biotechnology, Inc.
3054 E. Cornwallis Road
Durham NC 27709

In re Application of:
Kurt M. Lindenbaum
Serial No.: 12/409,135
Filed: March 23, 2009
Attorney Docket No.: **S08-05KL135089**

: PETITION DECISION

This is in response to the renewed petition under 37 CFR § 1.59(b), filed February 7, 2012, to expunge information from the above identified application. This application has been allowed.

Petitioner requests that the material submitted to the Patent Office on November 8, 2010 be expunged from the record. Petitioner states either: (A) that the information contains trade secret material, proprietary material and/or material that is subject to a protective order which has not been made public; or (B) that the information submitted was unintentionally submitted and the failure to obtain its return would cause irreparable harm to the party who submitted the information or to the party in interest on whose behalf the information was submitted, and the information has not otherwise been made public. The petition fee set forth in 37 CFR § 1.17(g) has been paid.

The reasons set forth in this petition establishes to the satisfaction of the Director that expungement of the information is appropriate. The file entry for this document has been closed and as such the document is no longer publicly available, which is the IFW equivalent to removal of a paper document from a paper file wrapper.

Therefore, petitioner's petition is GRANTED.

Should there be any questions about this decision please contact Marianne C. Seidel by letter addressed to Director, TC 1600, at the address listed above, or by telephone at 571-272-0584 or by facsimile sent to the general Office facsimile number, 571-273-8300.

/MC Seidel/
Marianne C. Seidel, Quality Assurance Specialist
Technology Center 1600

UNITED STATES PATENT AND TRADEMARK OFFICE

UNITED STATES DEPARTMENT OF COMMERCE
United States Patent and Trademark Office
Address: COMMISSIONER FOR PATENTS
P.O. Box 1450
Alexandria, Virginia 22313-1450
www.uspto.gov

APPLICATION NO.	FILING DATE	FIRST NAMED INVENTOR	ATTORNEY DOCKET NO.	CONFIRMATION NO.
12/409,169	03/23/2009	Kevin Threlkeld	S08-05RM304030	1851

30279 7590 03/06/2012

DANA REWOLDT
Syngenta Biotechnology, Inc.
3054 E. Cornwallis Road
Durham, NC 27709

EXAMINER	
COLLINS, CYNTHIA E	
ART UNIT	PAPER NUMBER
1638	
NOTIFICATION DATE	DELIVERY MODE
03/06/2012	ELECTRONIC

Please find below and/or attached an Office communication concerning this application or proceeding.

The time period for reply, if any, is set in the attached communication.

Notice of the Office communication was sent electronically on above-indicated "Notification Date" to the following e-mail address(es):

ip.sbi@syngenta.com

UNITED STATES PATENT AND TRADEMARK OFFICE

Commissioner for Patents
United States Patent and Trademark Office
P.O. Box 1450
Alexandria, VA 22313-1450
www.uspto.gov

MAR 0 6 2012

DANA REWOLDT
Syngenta Biotechnology, Inc.
3054 E. Cornwallis Road
Durham NC 27709

In re Application of:
Kevin Trelkeld
Serial No.: 12/409,169
Filed: March 23, 2009
Attorney Docket No.: **S08-05RM304030**

: PETITION DECISION

This is in response to the renewed petition under 37 CFR § 1.59(b), filed December 22, 2011, to expunge information from the above identified application. This application has been allowed.

Petitioner requests that the material submitted to the Patent Office on June 21, 2011 be expunged from the record. Petitioner states either: (A) that the information contains trade secret material, proprietary material and/or material that is subject to a protective order which has not been made public; or (B) that the information submitted was unintentionally submitted and the failure to obtain its return would cause irreparable harm to the party who submitted the information or to the party in interest on whose behalf the information was submitted, and the information has not otherwise been made public. The petition fee set forth in 37 CFR § 1.17(g) has been paid.

The reasons set forth in this petition establishes to the satisfaction of the Director that expungement of the information is appropriate. The file entry for this document has been closed and as such the document is no longer publicly available, which is the IFW equivalent to removal of a paper document from a paper file wrapper.

Therefore, petitioner's petition is GRANTED.

Should there be any questions about this decision please contact Marianne C. Seidel by letter addressed to Director, TC 1600, at the address listed above, or by telephone at 571-272-0584 or by facsimile sent to the general Office facsimile number, 571-273-8300.

/MC Seidel/
Marianne C. Seidel, Quality Assurance Specialist
Technology Center 1600

UNITED STATES PATENT AND TRADEMARK OFFICE

UNITED STATES DEPARTMENT OF COMMERCE
United States Patent and Trademark Office
Address: COMMISSIONER FOR PATENTS
P.O. Box 1450
Alexandria, Virginia 22313-1450
www.uspto.gov

APPLICATION NO.	FILING DATE	FIRST NAMED INVENTOR	ATTORNEY DOCKET NO.	CONFIRMATION NO.
12/409,192	03/23/2009	Kevin Threlkeld	S08-05RM310021	1891

30279 7590 01/20/2012

DANA REWOLDT
Syngenta Biotechnology, Inc.
3054 E. Cornwallis Road
Durham, NC 27709

EXAMINER	
COLLINS, CYNTHIA E	
ART UNIT	PAPER NUMBER
1638	

NOTIFICATION DATE	DELIVERY MODE
01/20/2012	ELECTRONIC

Please find below and/or attached an Office communication concerning this application or proceeding.

The time period for reply, if any, is set in the attached communication.

Notice of the Office communication was sent electronically on above-indicated "Notification Date" to the following e-mail address(es):

ip.sbi@syngenta.com

UNITED STATES PATENT AND TRADEMARK OFFICE

Commissioner for Patents
United States Patent and Trademark Office
P.O. Box 1450
Alexandria, VA 22313-1450
www.uspto.gov

DANA REWOLDT
Syngenta Biotechnology, Inc.
3054 E. Cornwallis Road
Durham NC 27709

In re Application of:
Kevin Threlkeld
Serial No.: 12/409,192
Filed: March 23, 2009
Attorney Docket No.: **S08-05RM310021**

: PETITION DECISION

This is in response to the renewed petition under 37 CFR § 1.59(b), filed December 22, 2011, to expunge information from the above identified application. This application has been allowed.

Petitioner requests that the material submitted to the Patent Office on June 20, 2011 be expunged from the record. Petitioner states either: (A) that the information contains trade secret material, proprietary material and/or material that is subject to a protective order which has not been made public; or (B) that the information submitted was unintentionally submitted and the failure to obtain its return would cause irreparable harm to the party who submitted the information or to the party in interest on whose behalf the information was submitted, and the information has not otherwise been made public. The petition fee set forth in 37 CFR § 1.17(g) has been paid.

The reasons set forth in this petition establishes to the satisfaction of the Director that expungement of the information is appropriate. The file entry for this document has been closed and as such the document is no longer publicly available, which is the IFW equivalent to removal of a paper document from a paper file wrapper.

Therefore, petitioner's petition is GRANTED.

Should there be any questions about this decision please contact Marianne C. Seidel by letter addressed to Director, TC 1600, at the address listed above, or by telephone at 571-272-0584 or by facsimile sent to the general Office facsimile number, 571-273-8300.

/MC Seidel/
Marianne C. Seidel, Quality Assurance Specialist
Technology Center 1600

UNITED STATES PATENT AND TRADEMARK OFFICE

Commissioner for Patents
United States Patent and Trademark Office
P.O. Box 1450
Alexandria, VA 22313-1450
www.uspto.gov

MAILED

DEC 09 2010

OFFICE OF PETITIONS

Kaplan Gilman & Pergament LLP
1480 Route 9 North
Woodbridge NJ 07095

In re Application of :
Jianyao Chen et al. :
Application No. 12/409,200 : NOTICE
Patent No. 7,674,047 :
Filed: March 23, 2009 :
Attorney Docket No. **566-005C**

This is a notice regarding your request for acceptance of a fee deficiency submission under 37 CFR 1.28.

The Office no longer investigates or rejects original or reissue patent under 37 CFR 1.56. **1098 Off. Gaz. Pat. Office 502 (January 3, 1989)**. Therefore, nothing in this Notice is intended to imply that an investigation was done.

Your fee deficiency submission under 37 CFR 1.28 is hereby **ACCEPTED**.

This patent is no longer entitled to small entity status. Accordingly, all future fees paid in this patent must be paid at the large entity rate.

Inquiries related to this communication should be directed to the undersigned at (571) 272-2783.

/Tredelle D. Jackson/
Paralegal Specialst
Office of Petitions

UNITED STATES PATENT AND TRADEMARK OFFICE

Commissioner for Patents
United States Patent and Trademark Office
P.O. Box 1450
Alexandria, VA 22313-1450
www.uspto.gov

MNEMOGLYPHICS, LLC
C/O CPA GLOBAL
P.O. BOX 52050
MINNEAPOLIS MN 55402

MAILED
OCT 28 2011
OFFICE OF PETITIONS

In re Application of :
Peleg et al. :
Application No. 12/409,275 : DECISION GRANTING PETITION
Filed: March 23, 2009 : UNDER 37 CFR 1.78(a)(3)
Attorney Docket No. 42P2445C5 :

This is a decision on the renewed petition under 37 CFR 1.78(a)(3), filed March 31, 2010, to accept an unintentionally delayed claim under 35 U.S.C. § 120 for the benefit of priority to prior-filed nonprovisional Application No. 09/989,736, filed November 19, 2001, as set forth in the amendment to the specification filed on August 17, 2009.

The petition is **GRANTED**.

A petition for acceptance of a claim for late priority under 37 CFR 1.78(a)(3) is only applicable to those applications filed on or after November 29, 2000. Further, the petition is appropriate only after the expiration of the period specified in 37 CFR 1.78(a)(2)(ii). In addition, the petition under 37 CFR 1.78(a)(3) must be accompanied by:

(1) the reference required by 35 U.S.C. § 120 and 37 CFR 1.78(a)(2)(i) of the prior-filed application, unless previously submitted;
(2) the surcharge set forth in § 1.17(t); and
(3) a statement that the entire delay between the date the claim was due under 37 CFR 1.78(a)(2)(ii) and the date the claim was filed was unintentional. The Commissioner may require additional information where there is a question whether the delay was unintentional.

The instant nonprovisional application was filed after November 29, 2000, and the claim herein for the benefit of priority to the prior-filed nonprovisional application is submitted after expiration of the period specified by 37 CFR 1.78(a)(2)(ii). Therefore, this is a proper petition under 37 CFR 1.78(a)(3).

The petition complies with the requirements for a grantable petition under 37 CFR 1.78(a)(3) in that (1) a reference to the above-noted, prior-filed nonprovisional application has been included in an amendment to the first sentence of the specification following the title, as provided by 37 CFR 1.78(a)(2)(iii); (2) the surcharge fee required by 37 CFR 1.17(t) has been submitted; and (3) the petition contains a proper statement of unintentional delay. Accordingly, having found that the instant petition for acceptance of an unintentionally delayed claim for the benefit of priority under 35 U.S.C. § 120 to the above-noted, prior-filed nonprovisional application satisfies the conditions of 37 CFR 1.78(a)(3), the petition is granted.

The granting of the petition to accept the delayed benefit claim to the prior-filed application under 37 CFR 1.78(a)(3) should not be construed as meaning that the instant application is entitled to the benefit of the prior-filed application. In order for the instant application to be entitled to the benefit of the prior-filed application, all other requirements under 35 U.S.C. § 120 and 37 CFR 1.78(a)(1) and (a)(2) must be met. Similarly, the fact that the corrected Filing Receipt accompanying this decision on petition includes the prior-filed application should not be construed as meaning that applicant is entitled to the claim for benefit of priority to the prior-filed application noted thereon. Accordingly, the examiner will, in due course, consider this benefit claim and determine whether the instant application is entitled to the benefit of the earlier filing date.

A corrected Filing Receipt, which includes the priority claim to the prior-filed nonprovisional application, accompanies this decision on petition.

Any inquiries concerning this decision may be directed to the undersigned at (571) 272-3282.

This matter is being referred to Technology Center Art Unit 2193 for appropriate action on the amendment filed August 17, 2009, including consideration by the examiner of applicant's entitlement to claim benefit of priority under 35 U.S.C. § 120 to the prior-filed nonprovisional applications.

/Liana Walsh/
Liana Walsh
Petitions Examiner
Office of Petitions

ATTACHMENT: Corrected Filing Receipt

UNITED STATES PATENT AND TRADEMARK OFFICE

UNITED STATES DEPARTMENT OF COMMERCE
United States Patent and Trademark Office
Address: COMMISSIONER FOR PATENTS
P.O. Box 1450
Alexandria, Virginia 22313-1450
www.uspto.gov

APPLICATION NUMBER	FILING or 371(c) DATE	GRP ART UNIT	FIL FEE REC'D	ATTY.DOCKET.NO	TOT CLAIMS	IND CLAIMS
12/409,275	03/23/2009	2193	3828	42P2445C5	10	2

CONFIRMATION NO. 1091

CORRECTED FILING RECEIPT

13293
Mnemoglyphics, LLC
c/o CPA Global
P.O. Box 52050
Minneapolis, MN 55402

OC000000050523640

Date Mailed: 10/21/2011

Receipt is acknowledged of this non-provisional patent application. The application will be taken up for examination in due course. Applicant will be notified as to the results of the examination. Any correspondence concerning the application must include the following identification information: the U.S. APPLICATION NUMBER, FILING DATE, NAME OF APPLICANT, and TITLE OF INVENTION. Fees transmitted by check or draft are subject to collection. Please verify the accuracy of the data presented on this receipt. **If an error is noted on this Filing Receipt, please submit a written request for a Filing Receipt Correction. Please provide a copy of this Filing Receipt with the changes noted thereon. If you received a "Notice to File Missing Parts" for this application, please submit any corrections to this Filing Receipt with your reply to the Notice. When the USPTO processes the reply to the Notice, the USPTO will generate another Filing Receipt incorporating the requested corrections**

Applicant(s)

Alexander D. Peleg, Haifa, ISRAEL;
Millind Mittal, South San Francisco, CA;
Larry M. Mennemeier, Boulder Creek, CA;
Benny Eitan, Haifa, ISRAEL;
Carole Dulong, Saratoga, CA;
Eiichi Kowashi, Ryugasaki-shi, JAPAN;
Wolf Witt, Sunnyvale, CA;

Power of Attorney: The patent practitioners associated with Customer Number 13293

Domestic Priority data as claimed by applicant

This application is a CON of 10/861,167 06/04/2004 PAT 7,509,367
which is a CON of 09/989,736 11/19/2001 PAT 7,424,505
which is a CON of 08/522,067 08/31/1995 PAT 6,385,634

Foreign Applications (You may be eligible to benefit from the **Patent Prosecution Highway** program at the USPTO. Please see http://www.uspto.gov for more information.)

If Required, Foreign Filing License Granted: 04/01/2009

The country code and number of your priority application, to be used for filing abroad under the Paris Convention, is **US 12/409,275**

Projected Publication Date: Not Applicable

Non-Publication Request: No

Early Publication Request: No

Title

PROCESSOR FOR PERFORMING MULTIPLY-ADD OPERATIONS ON PACKED DATA

Preliminary Class

708

PROTECTING YOUR INVENTION OUTSIDE THE UNITED STATES

Since the rights granted by a U.S. patent extend only throughout the territory of the United States and have no effect in a foreign country, an inventor who wishes patent protection in another country must apply for a patent in a specific country or in regional patent offices. Applicants may wish to consider the filing of an international application under the Patent Cooperation Treaty (PCT). An international (PCT) application generally has the same effect as a regular national patent application in each PCT-member country. The PCT process **simplifies** the filing of patent applications on the same invention in member countries, but **does not result** in a grant of "an international patent" and does not eliminate the need of applicants to file additional documents and fees in countries where patent protection is desired.

Almost every country has its own patent law, and a person desiring a patent in a particular country must make an application for patent in that country in accordance with its particular laws. Since the laws of many countries differ in various respects from the patent law of the United States, applicants are advised to seek guidance from specific foreign countries to ensure that patent rights are not lost prematurely.

Applicants also are advised that in the case of inventions made in the United States, the Director of the USPTO must issue a license before applicants can apply for a patent in a foreign country. The filing of a U.S. patent application serves as a request for a foreign filing license. The application's filing receipt contains further information and guidance as to the status of applicant's license for foreign filing.

Applicants may wish to consult the USPTO booklet, "General Information Concerning Patents" (specifically, the section entitled "Treaties and Foreign Patents") for more information on timeframes and deadlines for filing foreign patent applications. The guide is available either by contacting the USPTO Contact Center at 800-786-9199, or it can be viewed on the USPTO website at http://www.uspto.gov/web/offices/pac/doc/general/index.html.

For information on preventing theft of your intellectual property (patents, trademarks and copyrights), you may wish to consult the U.S. Government website, http://www.stopfakes.gov. Part of a Department of Commerce initiative, this website includes self-help "toolkits" giving innovators guidance on how to protect intellectual property in specific countries such as China, Korea and Mexico. For questions regarding patent enforcement issues, applicants may call the U.S. Government hotline at 1-866-999-HALT (1-866-999-4158).

LICENSE FOR FOREIGN FILING UNDER

Title 35, United States Code, Section 184

Title 37, Code of Federal Regulations, 5.11 & 5.15

GRANTED

The applicant has been granted a license under 35 U.S.C. 184, if the phrase "IF REQUIRED, FOREIGN FILING LICENSE GRANTED" followed by a date appears on this form. Such licenses are issued in all applications where the conditions for issuance of a license have been met, regardless of whether or not a license may be required as

set forth in 37 CFR 5.15. The scope and limitations of this license are set forth in 37 CFR 5.15(a) unless an earlier license has been issued under 37 CFR 5.15(b). The license is subject to revocation upon written notification. The date indicated is the effective date of the license, unless an earlier license of similar scope has been granted under 37 CFR 5.13 or 5.14.

This license is to be retained by the licensee and may be used at any time on or after the effective date thereof unless it is revoked. This license is automatically transferred to any related applications(s) filed under 37 CFR 1.53(d). This license is not retroactive.

The grant of a license does not in any way lessen the responsibility of a licensee for the security of the subject matter as imposed by any Government contract or the provisions of existing laws relating to espionage and the national security or the export of technical data. Licensees should apprise themselves of current regulations especially with respect to certain countries, of other agencies, particularly the Office of Defense Trade Controls, Department of State (with respect to Arms, Munitions and Implements of War (22 CFR 121-128)); the Bureau of Industry and Security, Department of Commerce (15 CFR parts 730-774); the Office of Foreign AssetsControl, Department of Treasury (31 CFR Parts 500+) and the Department of Energy.

NOT GRANTED

No license under 35 U.S.C. 184 has been granted at this time, if the phrase "IF REQUIRED, FOREIGN FILING LICENSE GRANTED" DOES NOT appear on this form. Applicant may still petition for a license under 37 CFR 5.12, if a license is desired before the expiration of 6 months from the filing date of the application. If 6 months has lapsed from the filing date of this application and the licensee has not received any indication of a secrecy order under 35 U.S.C. 181, the licensee may foreign file the application pursuant to 37 CFR 5.15(b).

UNITED STATES PATENT AND TRADEMARK OFFICE

UNITED STATES DEPARTMENT OF COMMERCE
United States Patent and Trademark Office
Address: COMMISSIONER FOR PATENTS
P.O. Box 1450
Alexandria, Virginia 22313-1450
www.uspto.gov

APPLICATION NO.	FILING DATE	FIRST NAMED INVENTOR	ATTORNEY DOCKET NO.	CONFIRMATION NO.
12/409,276	03/23/2009	Norihiro NAKAMURA	04329.4471	1093

7590 06/14/2011

FINNEGAN, HENDERSON, FARABOW, GARRETT & DUNNER LLP
901 NEW YORK AVENUE, NW
WASHINGTON, DC 20001-4413

EXAMINER	
WANG, ANDREW J	
ART UNIT	PAPER NUMBER
2628	
MAIL DATE	DELIVERY MODE
06/14/2011	PAPER

DECISION GRANTING PETITION UNDER 37 CFR 1.138(d)

The declaration of express abandonment is recognized

This is in response to the petition under 37 CFR 1.138(d), requesting for a refund of any previously paid search fee and excess claims fee in the above-identified application.

The petition is granted.

The express abandonment is recognized. Any previously paid search fee and excess claims fee are hereby refunded.

Telephone inquiries should be directed to the Office of Data Management at (571) 272-4200.

Patent Publication Branch
Office of Data Management

UNITED STATES PATENT AND TRADEMARK OFFICE

Commissioner for Patents
United States Patent and Trademark Office
P.O. Box 1450
Alexandria, VA 22313-1450
www.uspto.gov

QUALCOMM INCORPORATED
5775 MOREHOUSE DR.
SAN DIEGO CA 92121

MAILED
JAN 31 2012
OFFICE OF PETITIONS

In re Application of :
Kalle Ahmavaara :
Application No. 12/409307 : ON PETITION
Filing or 371(c) Date: 03/23/2009 :
Attorney Docket Number: :
081216 :

This is a decision on the petition under the unintentional provisions of 37 CFR 1.137(b), filed December 13, 2011, to revive the above-identified application.

The petition is **GRANTED**.

The application became abandoned for failure to timely file a reply within the meaning of 37 CFR 1.113 to the final Office action of April 1, 2011. The proposed reply required for consideration of a petition to revive must be a Notice of Appeal (and appeal fee required by 37 CFR 41.20(b)(2), an amendment that *prima facie* places the application in condition for allowance, a Request for Continued Examination and submission (37 CFR 1.114), or the filing of a continuing application under 37 CFR 1.53(b). See MPEP 711.03(c)(III)(A)(2). Applicant filed a reply to the Office action on May 26, 2011; however, the reply failed to place the application in condition for allowance. Accordingly, the date of abandonment of this application is May 27, 2011.

The petition satisfies the requirements of 37 CFR 1.137(b) in that petitioner has supplied (1) the reply in the form of a Request for Continued Examination (RCE) and fee (and the submission required by 37 CFR 1.114, previously filed on May 26, 2011); (2) the petition fee; and (3) a proper statement of unintentional delay.

Telephone inquiries concerning this decision should be directed to the undersigned at (571) 272-3232.

The application is being referred to Technology Center AU 2475 for processing of the RCE, and for appropriate action on the Amendment by the Examiner in the normal course of business.

/DLW/

Derek L. Woods
Attorney
Office of Petitions

UNITED STATES PATENT AND TRADEMARK OFFICE

Commissioner for Patents
United States Patent and Trademark Office
P.O. Box 1450
Alexandria, VA 22313-1450
www.uspto.gov

Decision Date : October 7,2011

In re Application of :

John COX

Application No : 12409335

Filed : 23-Mar-2009

Attorney Docket No : USGINZ07301

DECISION ON REQUEST TO WITHDRAW AS ATTORNEY/AGENTOF RECORD

This is an electronic decision on the Request to Withdraw as attorney or agent of record under 37 CFR § 1.36(b), filed October 7,2011

The request is **APPROVED.**

The request was signed by Johney U. Han (registration no. 45565) on behalf of all attorneys/agents associated with Customer Number 40518 . All attorneys/agents associated with Cusotmer Number 40518 have been withdrawn.

Since there are no remaining attorneys of record, all future communications from the Office will be directed to the first named inventor or assignee that has properly made itself of record pursuant to 37 CFR 3.71, with correspondence address:

Name USGI Medical, Inc.
Name2
Address 1 1140 Calle Cordillera
Address 2
City San Clemente
State CA
Postal Code 92673
Country US

As a reminder, requester is required to inform the first named inventor or assignee that has properly made itself of record pursuant to 37 CFR 3.71 of the electronically processed petition.

Telephone inquiries concerning this decision should be directed to the Patent Electronic Business Center (EBC) at 866-217-9197.

Office of Petitions

Doc Code: PET.AUTO **Document Description: Petition automatically granted by EFS-Web**	PTO/SB/83 U.S. Patent and Trademark Office Department of Commerce

Electronic Petition Request	**REQUEST FOR WITHDRAWAL AS ATTORNEY OR AGENT AND CHANGE OF CORRESPONDENCE ADDRESS**
Application Number	12409335
Filing Date	23-Mar-2009
First Named Inventor	John COX
Art Unit	3773
Examiner Name	MELANIE TYSON
Attorney Docket Number	USGINZ07301
Title	DEVICES AND METHODS FOR THE ENDOLUMENAL TREATMENT OF OBESITY

◉ Please withdraw me as attorney or agent for the above identified patent application and the practitioners of record associated with Customer Number: 40518

The reason(s) for this request are those described in 37 CFR:

10.40(b)(4)

Certifications

☒ I/We have given reasonable notice to the client, prior to the expiration of the response period, that the practitioner(s) intend to withdraw from employment

☒ I/We have delivered to the client or a duly authorized representative of the client all papers and property (including funds) to which the client is entitled

☒ I/We have notified the client of any responses that may be due and the time frame within which the client must respond

Change the correspondence address and direct all future correspondence to the first named inventor or assignee that has properly made itself of record pursuant to 37 CFR 3.71:

Name	USGI Medical, Inc.
Address	1140 Calle Cordillera
City	San Clemente
State	CA
Postal Code	92673
Country	US

I am authorized to sign on behalf of myself and all withdrawing practitioners.	
Signature	/Johney U. Han/
Name	Johney U. Han
Registration Number	45565

UNITED STATES PATENT AND TRADEMARK OFFICE

Commissioner for Patents
United States Patent and Trademark Office
P.O. Box 1450
Alexandria, VA 22313-1450
www.uspto.gov

HITACHI C/O WAGNER BLECHER LLP
123 WESTRIDGE DRIVE
WATSONVILLE CA 95076

MAILED

OCT 25 2010

OFFICE OF PETITIONS

In re Application of	:	
Andre S. Chan, et al.	:	
Application No. 12/409,378	:	DECISION ON PETITION
Filed: March 23, 2009	:	
Attorney Docket No. HSJ920090010US1	:	

This is a decision on the petition under the unintentional provisions of 37 CFR 1.137(b), filed October 6, 2010, to revive the above-identified application.

The petition is **GRANTED**.

The application became abandoned for failure to reply in a timely manner to the Notice to File Missing Parts of Nonprovisional Application (Notice), mailed March 31, 2010. The Notice set a period for reply of two (2) months from the mail date of the Notice. No extensions of time under the provisions of 37 CFR 1.136(a) were obtained. Accordingly, the application became abandoned on June 1, 2009. The Notice of Abandonment was mailed December 8, 2009.

The petition satisfies the requirements of 37 CFR 1.137(b) in that petitioner has supplied (1) the reply in the form of a signed oath/declaration and $130 surcharge, (2) the petition fee of $1,620, and (3) a proper statement of unintentional delay.

Telephone inquiries concerning this decision should be directed to Terri Johnson at (571) 272-2991.

This application is being referred to the Office of Data Management for appropriate action in the normal course of business on the reply received

/Terri Johnson/
Terri Johnson
Petitions Examiner
Office of Petitions

UNITED STATES PATENT AND TRADEMARK OFFICE

Commissioner for Patents
United States Patent and Trademark Office
P.O. Box 1450
Alexandria, VA 22313-1450
www.uspto.gov

JUN 2 2 2011

Myers, Andras, Sherman & Zarrabian LLP
(Samsung R & D Center)
1411 5th Street, Suite 306
Santa Monica, CA 90401

In re Application of	:	
Huai-Rong Shao et al.	:	RESPONSE TO PETITION
Application No. 12/409,385	:	TO EXPUNGE FILED
Filed: March 23, 2009	:	UNDER 37 CFR 1.59(b)
For: SYSTEM AND METHOD FOR DISCOVERING	:	
AND TRACKING COMMUNICATION DIRECTIONS	:	
WITH ASYMMETRIC ANTENNA SYSTEMS	:	

This is a response to the petition under 37 CFR 1.59(b), filed June 10, 2011 to expunge information from the above identified application.

Petitioner requests that the Proprietary Information Disclosure Statement (PIDS) filed June 10, 2011 be expunged from the record.

A petition under 37 CFR 1.59(b) must contain:

(A) a clear identification of the information to be expunged without disclosure of the details thereof;
(B) a clear statement that the information to be expunged is trade secret material, proprietary material, and/or subject to a protective order, and that the information has not been otherwise made public;
(C) a commitment on the part of the petitioner to retain such information for the period of any patent with regard to which such information is submitted;
(D) a statement that the petition to expunge is being submitted by, or on behalf of, the party in interest who originally submitted the information;
(E) the fee as set forth in 37 CFR 1.17(g) for a petition under 37 CFR 1.59(b).

The decision on the petitions will be held in abeyance until allowance of the application or mailing of an *Ex parte Quayle* action or a Notice of Abandonment, at which time the petition will be decided.

The decision on the petition is held in abeyance because prosecution on the merits is not closed. Accordingly, it is not appropriate to make a final determination of whether or not the material requested to be expunged is "material," with "materiality" being defined

as any information which the examiner considers as being important to a determination of patentability of the claims. Thus, the decision on the petition to expunge must be held in abeyance at this time.

During prosecution on the merits, the examiner will determine whether or not the identified document is considered to be "material." If petition satisfies requirements (A)-(E) above and the information is not considered by the examiner to be material, the information will be removed from the official file.

Katherine Matecki

Katherine Matecki, Director
Patent Technology Center 3600
(571) 272-5250

Snm/snm: 6/21/11

SM

UNITED STATES PATENT AND TRADEMARK OFFICE

UNITED STATES DEPARTMENT OF COMMERCE
United States Patent and Trademark Office
Address: COMMISSIONER FOR PATENTS
P.O. Box 1450
Alexandria, Virginia 22313-1450
www.uspto.gov

APPLICATION NO.	FILING DATE	FIRST NAMED INVENTOR	ATTORNEY DOCKET NO.	CONFIRMATION NO.
12/409,385	03/23/2009	Huai-Rong Shao	SAM2B.PAU.e201	1286

97001 7590 03/06/2012

Sherman & Zarrabian LLP
(Samsung R&D Center)
1411 5th Street, Suite 306
Santa Monica, CA 90401

EXAMINER	
LIU, HARRY K	
ART UNIT	PAPER NUMBER
3662	
MAIL DATE	DELIVERY MODE
03/06/2012	PAPER

Please find below and/or attached an Office communication concerning this application or proceeding.

The time period for reply, if any, is set in the attached communication.

UNITED STATES PATENT AND TRADEMARK OFFICE

Commissioner for Patents
United States Patent and Trademark Office
P.O. Box 1450
Alexandria, VA 22313-1450
www.uspto.gov

MAR - 6 2012

Sherman & Zarrabian LLP
(Samsung R&D Center)
1411 5th Street, Suite 306
Santa Monica CA 90401

In re Application of Huai-Rong Shao et al.
Appl. No.: 12/409,385
Filed: March 23, 2009
For: SYSTEM AND METHOD FOR DISCOVERING AND TRACKING COMMUNICATION DIRECTIONS WITH ASYMMETRIC ANTENNA SYSTEMS

RESPONSE TO PETITION TO EXPUNGE UNDER 37 CFR 1.59

This is a decision on the petition under 37 CFR 1.59(b), filed June 10, 2011, to expunge information from the above identified application.

The petition is **GRANTED**.

Petitioner requests that the Propriety Information Disclosure Statement (PIDS), filed June 10, 2011, be expunged from the record

A petition under 37 CFR 1.59(b) must contain:

(A) a clear identification of the information to be expunged without disclosure of the details thereof;
(B) a clear statement that the information to be expunged is trade secret material, proprietary material, and/or subject to a protective order, and that the information has not been otherwise made public;
(C) a commitment on the part of the petitioner to retain such information for the period of any patent with regard to which such information is submitted;
(D) a statement that the petition to expunge is being submitted by, or on behalf of, the party in interest who originally submitted the information;
(E) the fee as set forth in 37 CFR 1.17(g) for a petition under 37 CFR 1.59(b)

The information in question has been determined by the undersigned to not be material to the examination of the instant application.

As the above conditions have been met, the requested material has been expunged. However, the material will not be returned to the applicants. The obligation to return documents was removed from 37 CFR 1.59 (June 30, 2003 Fed Register, Vol. 68, No. 125, 38613). The documents have been closed from the IFW record so as not to be viewable by non-PTO personnel. This decision only applies to this application, and any other applications containing the proprietary information will need to be separately decided.

Applicant is required to retain the expunged material(s) for the life of any patent which issues on the above-identified application.

Any questions regarding this decision should be directed to Thomas Tarcza at (571) 272-6979.

Katherine Matecki

Katherine A. Matecki, Director
Patent Technology Center 3600
(571) 272-5250

THT/snm: 2/15/12

SM

Doc Code: PPH.PCT.652
Document Description: Petition to make special under PCT-Patent Pros Hwy

PTO/SB/20PCT-FI (01-11)
Approved for use through 01/31/2012. OMB 0651-0058
U.S. Patent and Trademark Office; U. S. DEPARTMENT OF COMMERCE
Under the Paperwork Reduction Act of 1995, no persons are required to respond to a collection of information unless it displays a valid OMB control number.

REQUEST FOR PARTICIPATION IN THE PATENT COOPERATION TREATY - PATENT PROSECUTION HIGHWAY (PCT-PPH) PILOT PROGRAM BETWEEN THE NATIONAL BOARD OF PATENTS AND REGISTRATION OF FINLAND (NBPR) AND THE USPTO

Application No:	12/409,547	Filing date:	March 24, 2009
First Named Inventor:	Alexandre A. Coelho		
Title of the Invention:	MONITORING OF DISTRIBUTED APPLICATIONS		

THIS REQUEST FOR PARTICIPATION IN THE PCT-PPH PILOT PROGRAM ALONG WITH THE REQUIRED DOCUMENTS MUST BE SUBMITTED VIA EFS-WEB. INFORMATION REGARDING EFS-WEB IS AVAILABLE AT HTTP://WWW.USPTO.GOV/EBC/EFS_HELP.HTML

APPLICANT HEREBY REQUESTS PARTICIPATION IN THE PCT-PPH PROGRAM AND PETITIONS TO MAKE THE ABOVE-IDENTIFIED APPLICATION SPECIAL UNDER THE PCT-PPH PROGRAM.

The above-identified application is (1) a national stage entry of the corresponding PCT application, or (2) a national stage entry of another PCT application which claims priority to the corresponding PCT application, or (3) a national application that claims domestic/ foreign priority to the corresponding PCT application, or (4) a national application which forms the basis for the priority claim in the corresponding PCT application, or (5) a continuing application of a U.S. application that satisfies one of (1) to (4) above, or (6) a U.S. application that claims domestic benefit to a U.S. provisional application which forms the basis for the priority claim in the corresponding PCT application.

The corresponding PCT application number(s) is/are: PCT/US10/28024

The international filing date of the corresponding PCT application(s) is/are: March 19, 2010

I. List of Required Documents:

a. **A copy of the latest international work product (WO/ISA, WO/IPEA, or IPER) in the above–identified corresponding PCT application(s)**

☑ Is attached.

☐ Is not attached because the document is already in the U.S. application.

b. **A copy of all claims which were indicated as having novelty, inventive step and industrial applicability in the above-identified corresponding PCT application(s).**

☑ Is attached.

☐ Is not attached because the document is already in the U.S. application.

c. **English translations of the documents in a. and b. above are attached (if the documents are not in the English language). A statement that the English translation is accurate is attached for the document in b. above.**

This collection of information is required by 35 U.S.C. 119, 37 CFR 1.55, and 37 CFR 1.102(d). The information is required to obtain or retain a benefit by the public, which is to file (and by the USPTO to process) an application. Confidentiality is governed by 35 U.S.C. 122 and 37 CFR 1.11 and 1.14. This collection is estimated to take 2 hours to complete, including gathering, preparing, and submitting the completed application form to the USPTO. Time will vary depending upon the individual case. Any comments on the amount of time you require to complete this form and/or suggestions for reducing this burden should be sent to the Chief Information Officer, U.S. Patent and Trademark Office, U.S. Department of Commerce, P.O. Box 1450, Alexandria, VA 22313-1450. DO NOT SEND FEES OR COMPLETED FORMS TO THIS ADDRESS.

PTO/SB/20PCT-FI (01-11)
Approved for use through 01/31/2012. OMB 0651-0058
U.S.Patent and Trademark Office; U.S. DEPARTMENT OF COMMERCE
Under the Paperwork Reduction Act of 1995, no persons are required to respond to a collection of information unless it displays a valid OMB control number.

REQUEST FOR PARTICIPATION IN THE PCT-PPH PILOT PROGRAM BETWEEN THE NBPR AND THE USPTO

(continued)

Application No.:	12/409,547
First Named Inventor:	Alexandre A. Coelho

d. **(1) An information disclosure statement listing the documents cited in the international work products (ISR, WO/ISA, WO/IPEA, IPER) of the corresponding PCT application.**

☐ Is attached

☑ Has already been filed in the above-identified U.S. application on November 24, 2010

(2) Copies of all documents (except) for U.S. patents or U.S. patent application publications)

☑ Are attached.

☐ Have already been filed in the above-identified U.S. application on _____

II. Claims Correspondence Table:

Claims in US Application	Patentable Claims in the corresponding PCT Application	Explanation regarding the correspondence
1-15	1-15	Claims are identical except for numerical references that refer to the drawings in the PCT application
16		US Claim 16 is patentable because it is dependent upon claim 13, which the ISR has deemed patentable in corresponding PCT claim 13.
17		US Claim 17 is patentable because it is dependent upon claim 16, which the ISR has deemed patentable through its dependence on PCT claim 13.
18		US Claim 18 is patentable because it is dependent upon claim 13, which the ISR has deemed patentable in corresponding PCT claim 13.
19	N/A	Claim canceled in preliminary amendment filed 4/28/11
20	N/A	Claim canceled in preliminary amendment filed 4/28/11

III. All the claims in the US application sufficiently correspond to the patentable claims in the corresponding PCT application.

Signature /Damon A. Rieth/	Date April 28, 2011
Name (Print/Typed) Damon A. Rieth	Registration Number 52,167

Privacy Act Statement

The **Privacy Act of 1974 (P.L. 93-579)** requires that you be given certain information in connection with your submission of the attached form related to a patent application or patent. Accordingly, pursuant to the requirements of the Act, please be advised that: (1) the general authority for the collection of this information is 35 U.S.C. 2(b)(2); (2) furnishing of the information solicited is voluntary; and (3) the principal purpose for which the information is used by the U.S. Patent and Trademark Office is to process and/or examine your submission related to a patent application or patent. If you do not furnish the requested information, the U.S. Patent and Trademark Office may not be able to process and/or examine your submission, which may result in termination of proceedings or abandonment of the application or expiration of the patent.

The information provided by you in this form will be subject to the following routine uses:

1. The information on this form will be treated confidentially to the extent allowed under the Freedom of Information Act (5 U.S.C. 552) and the Privacy Act (5 U.S.C 552a). Records from this system of records may be disclosed to the Department of Justice to determine whether disclosure of these records is required by the Freedom of Information Act.
2. A record from this system of records may be disclosed, as a routine use, in the course of presenting evidence to a court, magistrate, or administrative tribunal, including disclosures to opposing counsel in the course of settlement negotiations.
3. A record in this system of records may be disclosed, as a routine use, to a Member of Congress submitting a request involving an individual, to whom the record pertains, when the individual has requested assistance from the Member with respect to the subject matter of the record.
4. A record in this system of records may be disclosed, as a routine use, to a contractor of the Agency having need for the information in order to perform a contract. Recipients of information shall be required to comply with the requirements of the Privacy Act of 1974, as amended, pursuant to 5 U.S.C. 552a(m).
5. A record related to an International Application filed under the Patent Cooperation Treaty in this system of records may be disclosed, as a routine use, to the International Bureau of the World Intellectual Property Organization, pursuant to the Patent Cooperation Treaty.
6. A record in this system of records may be disclosed, as a routine use, to another federal agency for purposes of National Security review (35 U.S.C. 181) and for review pursuant to the Atomic Energy Act (42 U.S.C. 218(c)).
7. A record from this system of records may be disclosed, as a routine use, to the Administrator, General Services, or his/her designee, during an inspection of records conducted by GSA as part of that agency's responsibility to recommend improvements in records management practices and programs, under authority of 44 U.S.C. 2904 and 2906. Such disclosure shall be made in accordance with the GSA regulations governing inspection of records for this purpose, and any other relevant (*i.e.*, GSA or Commerce) directive. Such disclosure shall not be used to make determinations about individuals.
8. A record from this system of records may be disclosed, as a routine use, to the public after either publication of the application pursuant to 35 U.S.C. 122(b) or issuance of a patent pursuant to 35 U.S.C. 151. Further, a record may be disclosed, subject to the limitations of 37 CFR 1.14, as a routine use, to the public if the record was filed in an application which became abandoned or in which the proceedings were terminated and which application is referenced by either a published application, an application open to public inspection or an issued patent.
9. A record from this system of records may be disclosed, as a routine use, to a Federal, State, or local law enforcement agency, if the USPTO becomes aware of a violation or potential violation of law or regulation.

UNITED STATES PATENT AND TRADEMARK OFFICE

UNITED STATES DEPARTMENT OF COMMERCE
United States Patent and Trademark Office
Address: COMMISSIONER FOR PATENTS
P.O. Box 1450
Alexandria, Virginia 22313-1450
www.uspto.gov

APPLICATION NO.	FILING DATE	FIRST NAMED INVENTOR	ATTORNEY DOCKET NO.	CONFIRMATION NO.
12/409,547	03/24/2009	Alexandre A. Coelho	326430.01	1598

69316 7590 07/08/2011
MICROSOFT CORPORATION
ONE MICROSOFT WAY
REDMOND, WA 98052

EXAMINER	
SOUGH, HYUNG SUB	
ART UNIT	**PAPER NUMBER**
2194	

NOTIFICATION DATE	DELIVERY MODE
07/08/2011	ELECTRONIC

Please find below and/or attached an Office communication concerning this application or proceeding.

The time period for reply, if any, is set in the attached communication.

Notice of the Office communication was sent electronically on above-indicated "Notification Date" to the following e-mail address(es):

vffiling@microsoft.com
stevensp@microsoft.com
ntovar@MICROSOFT.COM

UNITED STATES PATENT AND TRADEMARK OFFICE

Commissioner for Patents
United States Patent and Trademark Office
P.O. Box 1450
Alexandria, VA 22313-1450
www.uspto.gov

MICROSOFT CORPORATION
ONE MICROSOFT WAY
REDMOND WA 98052

In re Application of: COELHO et al.
Application No. 12/409,547
Atty Docket #: **326430.01**
Filed: March 24, 2009
For: **MONITORING OF DISTRIBUTED APPLICATIONS**

DECISION ON REQUEST TO PARTICIPATE IN PATENT PROSECUTION HIGHWAY PROGRAM AND PETITION TO MAKE SPECIAL UNDER 37 CFR 1.102(a)

This is a decision on the request to participate in the PCT-Patent Prosecution Highway **(PCT-PPH)** pilot program and the petition under 37 CFR 1.102(a), filed April 28, 2011 to make the above- identified application special.

The petition is **GRANTED.**

A grantable request to participate in the PPH program and petition to make special require:

(1) The U.S. application is
(a) a national stage entry of the corresponding PCT application

Or

(b) a national application which forms the basis for the priority claim in the corresponding PCT application

Or

(c) *a* national stage entry of another PCT application (which can be filed in any competent receiving office) which claims priority to the corresponding PCT application

Or

(d) a national application claiming foreign domestic priority to the corresponding PCT application.
Applications subject to a secrecy order (35U.S.C.181) are excluded and not subject to participation in the PCT-PPH pilot program.

Or

(e) a continuing application (continuation, divisional, or continuation-in-part) of the U.S. application which satisfies one of the above (a) to (d) scenarios.

(2) The latest work product in the international phase of the PCT application corresponding to the U.S. application, namely the WO/ISA, or the WO/IPEA, or the IPER, indicates at least one claim in the PCT application has novelty, inventive step and industrial applicability. In case any observation is described in Box VIII of the WO/ISA, or the WO/IPEA, or the IPER which forms the basis for the PCT-PPH request, applicant must identify and explain why the claim(s) is/are not subject to any observation described in Box VIII irrespective of whether an amendment is submitted to correct the observation described in Box VIII. The U.S. application will not be eligible to participate in the PCT-PPH pilot program if applicant does not identify and explain why the claim(s) is/are not subject to the observation described in Box VIII.

Applicant may not file a request to participate in the PCT-PPH pilot program on the basis of an International Search Report (ISR) only.

(3) Applicant must:

a. Ensure all the claims in the U.S. application sufficiently correspond or be amended to sufficiently correspond to one or more of those claims indicated as having novelty, inventive step and industrial applicability and free of any observation described in Box VIII in the latest work product of the corresponding PCT application and

b. Submit a claims correspondence table in English;

The USPTO will accept claims written in dependent form in the U.S. application which are narrower in scope than the claims indicated as having novelty, inventive step and industrial applicability and free of any observation described in Box VIII in the latest work product of the corresponding PCT application.

(4) Substantive Examination of the U.S. application has not begun;

(5) Applicant must submit a copy of:

a. the latest international work product, WO/ISA, or WO/IPEA or PER, which indicated that the claim(s) has/have novelty, inventive step and industrial applicability along with an English translation thereof if the copy of the latest international work product is not in the English language, unless the U.S. application and the corresponding PCT application satisfy the relationship noted in (l)(a) above.

(6) Applicant must submit a copy of:

a. the claims from the corresponding PCT application which were indicated as having novelty, inventive step and industrial applicability in the latest work product of the PCT application,
b. an English translation of the claims and
c. a statement that the English translation is accurate.

If the claims in the U.S. application are identical to the claims from the corresponding PCT application, and are in the English language, applicant may just indicate such in the PCT-PPH request and it will not be necessary for applicant to submit a copy of the claims from the corresponding PCT application.

(7) Applicant must submit:

a. An IDS listing the documents cited in the work products in the international phase of the PCT application corresponding to the U.S. application, namely the WO/ISA, or the WO/IPEA, or the IPER,(unless already submitted in this application)
b. Copies of the documents except U.S. patents or U.S. patent application publications (unless already submitted in this application);

The request to participate in the PPH pilot program and petition are found to comply with the above requirements. Accordingly, the above-identified application has been accorded "special" status.

Telephone inquiries concerning this decision should be directed to Mano Padmanabhan at 571-272-4210.

All other inquiries concerning the examination or status of the application is accessible in the PAIR system at http://www.uspto.gov/ebc/index.html.

The application is being forwarded to the examiner for action on the merits commensurate with this decision.

/Mano Padmanabhan/

_____

Mano Padmanabhan
Quality Assurance Specialist, Technology Center 2100, Workgroup 2180
571-272-4210

UNITED STATES PATENT AND TRADEMARK OFFICE

Commissioner for Patents
United States Patent and Trademark Office
P.O. Box 1450
Alexandria, VA 22313-1450
www.uspto.gov

GREER, BURNS & CRAIN
300 S WACKER DR
25TH FLOOR
CHICAGO, IL 60606

MAILED

AUG 19 2011

OFFICE OF PETITIONS

In re Application of :
Kazuya Tanahashi :
Application No. 12/409,570 : Decision Refusing to Accord
Filed: March 24, 2009 : Status Under 37 CFR 1.47(b)
Attorney Docket No. 1122.84047 :
For: Document Error Inference :
Processing Program, Processing :
Device, and Processing Method :

This is a decision on the petition under 37 CFR 1.47(b) filed October 30, 2009. The Office regrets the delay in the issuance of the instant decision.

The petition is **dismissed**.

Any request for reconsideration of this decision must be submitted within TWO (2) MONTHS from the mail date of this decision. Extensions of time under 37 CFR 1.136(a) are permitted. No further petition fee is required for the request. Any response should be titled "Request for Reconsideration of Petition Under 37 CFR 1.47(b)" and may include an oath or declaration executed by the current non-signing inventor(s). **Failure to respond will result in abandonment of the application.**

A grantable petition under 37 CFR 1.47(b) requires:

(1) Proof that the non-signing inventor cannot be found or reached after diligent effort or that the inventor refused to sign the declaration after having been presented with the application papers (specification, claims, and drawings),
(2) An acceptable oath or declaration;
(3) The petition fee;
(4) A statement of the last known address of the non-signing inventor;
(5) Proof of proprietary interest; and
(6) Proof acceptance of the declaration without the inventor's signature is necessary to preserve the rights of the parties or prevent irreparable damage.

The petition fails to satisfy requirements (1) and (5) set forth above.

The Record does not Establish Constructive Refusal by the Inventor to Sign the Declaration.

MPEP § 409.03(d)(II),

> A refusal by an inventor to sign an oath or declaration when the inventor has not been presented with the application papers does not itself suggest that the inventor is refusing to join the application unless it is clear that the inventor understands exactly what he or she is being asked to sign and refuses to accept the application papers.... It is reasonable to require that the inventor be presented with the application papers before a petition under 37 CFR 1.47 is granted since such a procedure ensures that the inventor is apprised of the application to which the oath or declaration is directed. In re Gray, 115 USPQ 80 (Comm'r Pat. 1956).

Petitioner mailed letters written in Japanese to the inventor on April 15, 2009, and August 6, 2009. Petitioner has not provided a translation of either letter and the Office is unable to determine if a copy of the application was mailed with either letter. Therefore, the petition cannot be granted.

Any request for reconsideration should:

1. Include a translation of the two letters,
2. Explicitly state whether or not a copy of the application was mailed with the April 15, 2009 letter, and
3. Explicitly state whether or not a copy of the application was mailed with the August 6, 2009 letter.

If a copy of the application was not mailed to the inventor with either letter, Petitioner should send a copy of the application papers to the inventor along with instructions setting a deadline for the return of a signed declaration. The letter to the inventor should state that, if Petitioner receives no reply from the inventor, petitioner will interpret the lack of reply as a refusal to sign the declaration. This sort of ultimatum lends support to a finding of refusal by conduct when a response is not received from an inventor. The proof of the pertinent events should be made by a statement of someone with firsthand knowledge of the events and should include a translated copy of the cover letter.

The Evidence of a Proprietary Interest is Insufficient.

The petition includes a paper titled "Statement Establishing Propriety Interest by Person Signing on Behalf of Nonsigning Inventor," which is signed by Michio Nakamura, a general manager at Fujitsu Limited. The paper states,

> Although there is not [an] assignment or written agreement to assign, a sufficient proprietary interest is demonstrated by the attached legal memorandum establishing that a court of competent jurisdiction would, by the weight of authority in that jurisdiction, award title in the invention to Fujitsu Limited, on whose behalf I have authority to sign.

The petition includes a legal memorandum signed by Patent Attorney Keiko Shigehisa and dated October 30, 2009. The memorandum states,

> I have reviewed the following documents:
>
> (1) [The instant petition];
> (2) Statement of Facts and Attachments 1-4;
> (3) Statement Establishing Propriety Interest by Person Signing on behalf of Nonsigning Inventor; and
> (4) Added Page to Combined Declaration and Power of Attorney.
>
> All of the above-referenced documents have been duly executed by those who are authorized and I am confident that the rights for Fujitsu Limited to obtain patents in Japan and foreign countries relating to the patent application in question would be legally certified by a Japanese court with proper jurisdiction regarding this case.

MPEP § 409.03(f) states,

> A proprietary interest obtained other than by assignment or agreement to assign may be demonstrated by an appropriate legal memorandum to the effect that a court of competent jurisdiction (federal, state, or foreign) would by the weight of authority in that jurisdiction award title of the invention to the 37 CFR 1.47(b) applicant.... A copy (in the English language) of a statute (if other than the United States statute) or a court decision (if other than a reported decision of a federal court or a decision reported in the United States Patents Quarterly) relied on to demonstrate a proprietary interest should be made of record.

The legal memorandum fails to include a copy (in the English language) of any statute or court decision relied upon by Shigehisa when reaching the legal conclusion set forth in the memorandum.

A request for reconsideration clearly identifying the statute(s) or court decision(s) Shigehisa relied upon when he drafted the memorandum should be filed.

The current record fails to demonstrate the existence of any connection between Fujitsu and the inventor other than bare assertions Fujitsu owns all rights in the inventor's invention. For example,

1. The record (petition and papers filed with the petition) does not establish, *or even include a paper alleging*, the inventor is a former or current employee of Fujitsu;
2. The record does not establish, *or even include a paper alleging*, the inventor has ever had any business relationship with Fujitsu;
3. The record does not establish, *or even include a paper alleging*, the inventor has ever purchased any product made by Fujitsu; and
4. The record does not establish, *or even include a paper alleging*, the inventor has ever spoken with any employee of Fujitsu.

MPEP § 409.03(f) states,

> The facts in support of any conclusion that a court would award title to the 37 CFR 1.47(b) applicant should be made of record by way of an affidavit or declaration of the person having firsthand knowledge of same.

Any request for reconsideration should clearly indicate whether or not Shigehisa relied upon any facts not currently of record at the time he drafted the October 30, 2009 memorandum. If he did rely on any facts not currently of record, the request for reconsideration should clearly identify such facts and make the facts of record via the submission of an affidavit or declaration by a person with firsthand knowledge of the facts.

Further correspondence with respect to this matter may be submitted as follows:

By Internet: A request for reconsideration may be filed electronically using EFS Web.[1] Document Code "PET.OP" should be used if the request is filed electronically.

By mail:
Mail Stop Petition
Commissioner for Patents
P.O. Box 1450
Alexandria, VA 22313-1450

By facsimile: (571) 273-8300
Attn: Office of Petitions

By hand:
U.S. Patent and Trademark Office
Customer Service Window
Randolph Building
401 Dulany Street
Alexandria, VA 22314

Telephone inquiries regarding this communication should be directed to Petitions Attorney Steven Brantley at (571) 272-3203.

Charles Steven Brantley
Senior Petitions Attorney
Office of Petitions

[1] General Information concerning EFS Web can be found at http://www.uspto.gov/patents/process/file/efs/index.jsp.

UNITED STATES PATENT AND TRADEMARK OFFICE

Commissioner for Patents
United States Patent and Trademark Office
P.O. Box 1450
Alexandria, VA 22313-1450
www.uspto.gov

MAILED
DEC 13 2011
OFFICE OF PETITIONS

GREER, BURNS & CRAIN
300 S WACKER DR
25TH FLOOR
CHICAGO, IL 60606

In re Application of	:	
Kazuya Tanahashi	:	
Application No. 12/409,570	:	Decision According Status
Filed: March 24, 2009	:	Under 37 CFR 1.47(b)
Attorney Docket No. 1122.84047	:	
For: Document Error Inference Processing Program, Processing Device, and Processing Method	:	

This is a decision on the petition under 37 CFR 1.47(b) filed October 18, 2011.

The petition is **granted**.

The application and papers have been reviewed and found in compliance with 37 CFR 1.47(b). This application is hereby accorded Rule 47(b) status.

As provided in Rule 47(c), this Office will forward notice of this application's filing to the non-signing inventor at the address given in the petition. Notice of the filing of this application will also be published in the Official Gazette.

Technology Center Art Unit 2114 will be informed of the instant decision to ensure the Art Unit is aware the pending petition has been decided and that the application is in condition to be examined in due course.

Telephone inquiries regarding this communication should be directed to Petitions Attorney Steven Brantley at (571) 272-3203.

Charles Steven Brantley
Senior Petitions Attorney
Office of Petitions

Attorney Docket No. CTI-034

PATENT

IN THE UNITED STATES PATENT AND TRADEMARK OFFICE

In re application of:	Jason S. Newcom et al.		
Application No.:	12/409,626	Confirmation No:	1747
Filed:	March 24, 2009	Group Art Unit.:	1621
		Examiner	Eyler, Yvonne L.
For:	SUBSTITUTED PYRIDOXAZINES		

Commissioner for Patents
P.O. Box 1450
Alexandria, VA 22313-1450

PETITION TO MAKE SPECIAL UNDER 37 C.F.R. 1.102 AND PATENT APPLICATION BACKLOG REDUCTION STIMULUS PLAN UNDER 74 F.R. 62285 AND 75 F.R. 36063

Sir:

Pursuant to the regulations promulgated in 74 F.R. 62285 of November 27, 2009 and 75 F.R. 36063 of June 24, 2010 applicants request the above-cationed application be accorded special status for examination in view of the following:

Applicant has expressly abandoned a previously co-pending application that was filed before October 1, 2009: U.S. Serial No. 12/004,134 filed December 19, 2007.

In compliance with 74 F.R. 62285 and 75 F.R. 36063, the following conditions are met:

1. The application for which special status is sought is a non-provisional application that has an actual filing date earlier than October 1, 2009, in which the applicant has established small entity status under 37 CFR 1.27. (Although the latter requirement has been eliminated under 75 F.R. 36063);

2. Applicant has another copending non-provisional application that has an actual filing date earlier than October 1, 2009, and is complete under 37 CFR 1.53;

3. The application for which special status is sought and the other copending non-provisional application are owned by the same party or name at least one inventor in common;

4. Applicant has filed a letter of express abandonment under 37 CFR 1.138(a) signed in compliance with 37 CFR 1.33(b)(1), (b)(3) or (b)(4) (37 CFR 1.138(b)) in the copending non-provisional application before it has been taken up for examination and includes a letter stating that applicant has not and will not file a new application that claims the same invention claimed in this expressly abandoned application (the phrase "same invention" has the same meaning as used in the context of statutory double patenting under 35 U.S.C. 101);

5. Applicant has filed this petition under 37 CFR 1.102 in the application for which special status is sought.

As specified in the above-cited regulations, copy of the abandonment letter containing the required statements filed in expressly abandoned application USSN 12/004,134 is included with this submission.

Applicants believe that no fee is due in connection with the filing of this Petition to Make Special in view of the *sua sponte* waiver of the petition fee by the Office in connection with filings under 74 F.R. 62285, published November 27, 2009 and as extended under 75 F.R. 36063, published June 24, 2010.

Respectfully submitted,

Date: September 1, 2010

/Algis Anilionis/
Algis Anilionis
Registration No. 36,995

CARA THERAPEUTICS INC.
One Parrott Drive
Shelton, CT 06484-4733
(203) 567-1521

Customer No. 68423

UNITED STATES PATENT AND TRADEMARK OFFICE

Commissioner for Patents
United States Patent and Trademark Office
P.O. Box 1450
Alexandria, VA 22313-1450
www.uspto.gov

Algis Anilionis,
Senior Intellectual Property Counsel
Cara Therapeutics, Inc.
One Parrott Drive
Shelton CT 06484-4733

MAILED

SEP 17 2010

OFFICE OF PETITIONS

In re Application of :
NEWCOM, et al. :
Application No. 12/409,626 :
Filed: March 24, 2009 :
Attorney Docket No. **CTI-034** :

DECISION ON PETITION
TO MAKE SPECIAL
37 CFR 1.102

This is a decision on the petition under 37 CFR 1.102, filed September 1, 2010, to make the above-identified application special under the Patent Application Backlog Reduction Stimulus Plan which is a pilot program set forth at 74 Federal Register Notice 62285 (November 27, 2009) and 75 Federal Register Notice 36063 (June 24, 2010).

The petition is **DISMISSED**.

Any request for reconsideration of this decision should include a cover letter entitled "Renewed Petition under 37 CFR 1.102." This is **not** a final agency action within the meaning of 5 U.S.C. § 704.

A grantable petition to make an application special under 37 CFR 1.102 and the pilot program as set forth in 74 FR 62285 and 75 FR 36063 must be directed to a nonprovisional application filed prior to October 1, 2009.

The USPTO will accord special status for examination under Patent Application Backlog Reduction Stimulus Plan under the following conditions:

(1) The application for which special status is sought is a nonprovisional application that has an actual filing date earlier than October 1, 2009;

(2) The applicant has another copending nonprovisional application that has an actual filing date earlier than October 1, 2009, and is complete under 37 CFR 1.53;

(3) The application for which special status is sought and the other copending nonprovisional application either are owned by the same party as of October 1, 2009, or name at least one inventor in common;

(4) The applicant files a letter of express abandonment under 37 CFR 1.138(a) in the copending nonprovisional application before it has been taken up for examination and

a) include a statement that the applicant has not and will not file a new application that claims the same invention claimed in the expressly abandoned application;

b) includes with the letter of express abandonment a statement that the applicant has not and will not file an application that claims the benefit of the expressly abandoned application under any provision of title 35, United States Code, and

c) the applicant agrees not to request a refund of any fees paid in the expressly abandoned application; and

(5) The applicant files a petition under 37 CFR 1.102 in the application for which special status is sought that

a) includes a specific identification of the relationship between the applications that qualifies the application for special status;

b) identifies, by application number if available, the application that is being expressly abandoned;

c) provides a statement certifying that applicant has not filed petitions in more than fourteen (14) other applications requesting special status under this program; and

d) provides a statement that applicant agrees to make an election without traverse in a telephonic interview if the Office determines that the claims of the application to be made special are directed to two or more independent and distinct inventions.

The requirement for a fee for consideration of the petition to make special for applications pertaining to Patent Application Backlog Reduction Stimulus Plan has been waived.

The petition lacks Items 4b, 4c, 5c, and 5d above.

More specifically, the letter of Express Abandonment filed in Application No. 12/040,134, does not, in regard to Items 4a-c above, include the required statements directed thereto that the applicant (b) has not and will not file an application that claims the benefit of the expressly abandoned application under any provision of title 35, United States Code, and (c) agrees not to request a refund of any fees paid in the expressly abandoned application.

The petition filed in the present application, i.e., Application No. 12/409,626, does not, in regard to Items 5(c) and 5(d), provide the required statements that applicant (d) has not filed petitions in more than fourteen (14) other applications requesting special status under this program, and (e)

agrees to make an election without traverse in a telephonic interview if the Office determines that the claims of the application to be made special are directed to two or more independent and distinct inventions. The presents of such statements in the Express Abandonment, Corrected Express Abandonment, or copies thereof submitted with the petition are not sufficient to satisfy these requirements.

In view of the above, the present petition to make special must be dismissed.

Further correspondence with respect to this matter should be addressed as follows:

By Mail: Mail Stop PETITION
Commissioner for Patents
P. O. Box 1450
Alexandria, VA 22313-1450

By hand: U. S. Patent and Trademark Office
Customer Service Window, Mail Stop Petitions
Randolph Building
401 Dulany Street
Alexandria, VA 22314

By FAX: (571) 273-8300

Telephone inquires concerning this decision should be directed to Brian W. Brown at 571-272-5338.

All other inquiries concerning either examination or status of the application should be directed to the Technology Center.

The application is being forwarded to the Technology Center Art Unit 2169 for action in its regular turn.

Brian W. Brown
Petitions Examiner
Office of Petitions

Attorney Docket No. CTI-034

PATENT

IN THE UNITED STATES PATENT AND TRADEMARK OFFICE

In re application of:	Jason S. Newcom et al.		
Application No.:	12/409,626	Confirmation No:	1747
Filed:	March 24, 2009	Group Art Unit.:	1621
		Examiner	Eyler, Yvonne L.
For:	SUBSTITUTED PYRIDOXAZINES		

Mail Stop PETITION
Commissioner for Patents
P.O. Box 1450
Alexandria, VA 22313-1450

RENEWED PETITION TO MAKE SPECIAL UNDER 37 C.F.R. 1.102

Sir:

This Renewed Petition is in response to the Decision On Petition To Make Special Under 37 C.F.R. 1.102 in the above-captioned application mailed from the Office of Petitions on September 17, 2010. Applicant respectfully requests reconsideration of the dismissal of the Petition requesting that the above-captioned application be accorded special status for examination in view of the following:

Applicant has expressly abandoned a previously co-pending application that was filed before October 1, 2009: i.e. U.S. Serial No. 12/004,134 filed December 19, 2007.

In compliance with 74 F.R. 62285 and 75 F.R. 36063, the following conditions are met:

1. The application for which special status is sought is a non-provisional application that has an actual filing date earlier than October 1, 2009, in which the applicant has established small entity status under 37 CFR 1.27. (Although the latter requirement has been eliminated under 75 F.R. 36063);

2. Applicant has another copending non-provisional application that has an actual filing date earlier than October 1, 2009, and is complete under 37 CFR 1.53;

3. The application for which special status is sought and the other copending non-provisional application are owned by the same party or name at least one inventor in common;

4. Applicant has filed a letter of express abandonment under 37 CFR 1.138(a) signed in compliance with 37 CFR 1.33(b)(1), (b)(3) or (b)(4) (37 CFR 1.138(b)) in the copending non-provisional application before it has been taken up for examination and includes a letter stating that applicant has not and will not file a new application that claims the same invention claimed in this expressly abandoned application (the phrase "same invention" has the same meaning as used in the context of statutory double patenting under 35 U.S.C. 101);

5. Applicant has filed this petition under 37 CFR 1.102 in the application for which special status is sought.

A copy of the (corrected) Abandonment Letter filed August 30, 2010 filed in expressly abandoned application, USSN 12/004,134 and containing the required statements, is included with this submission as specified in the above-cited regulations.

A copy of the Letter of Express Abandonment of U.S. Serial No. 12/004,134 is co-filed with this Renewed Petition. The Letter of Express Abandonment includes the following statements:

(1) Applicant has not and will not file a new application that claims the same invention claimed in this expressly abandoned application (the phrase "same invention" has the same meaning as used in the context of statutory double patenting under 35 U.S.C. 101);

(2) Applicant has not received special status for more than fourteen other applications under this program;

(3) (iv) Applicant agrees to make an election without traverse in a telephonic interview if the US Patent and Trademark Office determined that the claims of the application to be made special are directed to two or more independent and distinct inventions (See 35 U.S.C. 121, 37 C.F.R. 1.141-142).

Applicant further hereby agrees not to request a refund of any fees paid in the expressly abandoned application, U.S. Serial No. 12/004,134.

The above statements comply with the requirements of items 4b, 4c, 5c and 5d repectively, cited in the Dismissal Letter of September 17, 2010 as lacking from the original Petition to Make Special Under 37 C.F.R. 1.102.

Therefore, Applicant asserts that the requirements of the Patent Application Backlog Reduction Stimulus Plan set forth at 74 Federal Register Notice 62285 (November 27, 2009) and 75 Federal Register Notice 36063 (June 24, 2010) have been met.

In view of the above recited submissions, Applicant respectfully requests withrawal of the dismissal of the Petition to Make Special U.S. Serial No. 12/409,626 and grant of this Renewed Petition to Make Special. Applicant earnestly requests that the Office contact the undersigned attorney of record with any issues that may remain concerning this Renewed Petition.

Applicants believe that no fee is due in connection with the filing of this Petition to Make Special in view of the *sua sponte* waiver of the petition fee by the Office in connection with filings under 74 F.R. 62285, published November 27, 2009 and as extended under 75 F.R. 36063, published June 24, 2010.

Respectfully submitted,

Date: September 22, 2010

/Algis Anilionis/
Algis Anilionis
Registration No. 36,995

CARA THERAPEUTICS INC.
One Parrott Drive
Shelton, CT 06484-4733
(203) 567-1521

Customer No. 68423

UNITED STATES PATENT AND TRADEMARK OFFICE

Commissioner for Patents
United States Patent and Trademark Office
P.O. Box 1450
Alexandria, VA 22313-1450
www.uspto.gov

Algis Anilionis,
Senior Intellectual Property Counsel
Cara Therapeutics, Inc.
One Parrott Drive
Shelton CT 06484-4733

MAILED

OCT 01 2010

OFFICE OF PETITIONS

In re Application of :
NEWCOM, et al. :
Application No. 12/409,626 :
Filed: March 24, 2009 :
Attorney Docket No. **CTI-034** :

DECISION ON PETITION
TO MAKE SPECIAL
37 CFR 1.102

This is a decision on the Renewed Petition under 37 CFR 1.102, filed September 22, 2010, to make the above-identified application special under the Patent Application Backlog Reduction Stimulus Plan which is a pilot program set forth at 74 Federal Register Notice 62285 (November 27, 2009) and 75 Federal Register Notice 36063 (June 24, 2010).

The Renewed Petition is **DISMISSED**.

Any request for reconsideration of this decision should include a cover letter entitled "Renewed Petition under 37 CFR 1.102." This is **not** a final agency action within the meaning of 5 U.S.C. § 704.

A grantable petition to make an application special under 37 CFR 1.102 and the pilot program as set forth in 74 FR 62285 and 75 FR 36063 must be directed to a nonprovisional application filed prior to October 1, 2009.

The USPTO will accord special status for examination under Patent Application Backlog Reduction Stimulus Plan under the following conditions:

(1) The application for which special status is sought is a nonprovisional application that has an actual filing date earlier than October 1, 2009;

(2) The applicant has another copending nonprovisional application that has an actual filing date earlier than October 1, 2009, and is complete under 37 CFR 1.53;

(3) The application for which special status is sought and the other copending nonprovisional application either are owned by the same party as of October 1, 2009, or name at least one inventor in common;

(4) The applicant files a letter of express abandonment under 37 CFR 1.138(a) in the copending nonprovisional application before it has been taken up for examination and

a) include a statement that the applicant has not and will not file a new application that claims the same invention claimed in the expressly abandoned application;

b) includes with the letter of express abandonment a statement that the applicant has not and will not file an application that claims the benefit of the expressly abandoned application under any provision of title 35, United States Code, and

c) the applicant agrees not to request a refund of any fees paid in the expressly abandoned application; and

(5) The applicant files a petition under 37 CFR 1.102 in the application for which special status is sought that

a) includes a specific identification of the relationship between the applications that qualifies the application for special status;

b) identifies, by application number if available, the application that is being expressly abandoned;

c) provides a statement certifying that applicant has not filed petitions in more than fourteen (14) other applications requesting special status under this program; and

d) provides a statement that applicant agrees to make an election without traverse in a telephonic interview if the Office determines that the claims of the application to be made special are directed to two or more independent and distinct inventions.

The requirement for a fee for consideration of the petition to make special for applications pertaining to Patent Application Backlog Reduction Stimulus Plan has been waived.

The petition lacks Items 4b, 4c, 5c, and 5d above.

The Letters of Express Abandonment, i.e., the EXPRESS ABANDONMENT IN COMPLIANCE WITH PATENT APPLICATION BACKLOG REDUCTION STIMULUS PLAN UNDER 37 C.F.R.§ 1.102 AND 75 FED.REG. 36063) and the "CORRECTED EXPRESS ABANDONMENT IN COMPLIANCE WITH PATENT APPLICATION BACKLOG REDUCTION STIMULUS PLAN UNDER 37 C.F.R.§ 1.102 AND 75 FED.REG. 36063) concurrently filed on August 30, 2010 in Application No. 12/004,134 (hereinafter "the '134 Application"), are insufficient to satisfy all of the cumulative Express Abandonment requirements set forth in the above-identified Federal Register Notices because the Letters of

Express Abandonment, either alone or in combination, do not included the required statements that applicant:

1. has not and will not file an application that claims the benefit of the expressly abandoned application under any provision of title 35, United States Code (Item 4b above), and

2. (c) agrees not to request a refund of any fees paid in the expressly abandoned application (Item 4c above).

Petitioner's comments urging that applicants have complied with the requirements for the Letter of Express Abandonment filed in the '565 Application have been considered, but are not persuasive.

74 Federal Register Notice 62285 (November 27, 2009) states, in part, that:

> "The USPTO will accord special status for examination under Patent Application Backlog Reduction Stimulus Plan under the following conditions...(4) the applicant files a letter of express abandonment...and includes...
>
> a statement that the applicant has not and will not file an application that claims the benefit of the expressly abandoned application under any provision of title 35, United States Code; and
>
> that the applicant agrees not to request a refund of any fees paid in the expressly abandoned application."

75 Federal Register Notice 36063 (June 24, 2010) states, in part, that:

> "the following new requirements are added to the program: (1) The letter of express abandonment filed in the copending nonprovisional application must also include a statement that the applicant has not and will not file a new application that claims the same invention claimed in the expressly abandoned application (the phrase 'same invention' has the same meaning as used in the context of statutory double patenting under 35 U.S.C. 101)".

To overcome the above express abandonment deficiencies, applicant should file a newly executed Letter of Express Abandonment in the '134 Application that includes each of the required statements set forth in Item 4a-c above.

In regard to Items 5c and 5d, the original Petition, filed September 1, 2010, and the present Renewed Petition, filed September 22, 2010, in the present application, .i.e. Application No. 12/409,626 (hereinafter "the '626 Application), for which special status is being sought does not include the required statements that applicant:

3. has not filed petitions in more than fourteen (14) other applications requesting special status under this program (Item 5c), and

4. agrees to make an election without traverse in a telephonic interview if the Office determines that the claims of the application to be made special are directed to two or more independent and distinct inventions (Item 5d).

Petitioner's comments urging that applicants have complied with the requirements for the Petition to Make Special filed in the '626 Application have been considered, but are not persuasive.

74 Federal Register Notice 62285 (November 27, 2009) also states, in part, that:

> "The USPTO will accord special status for examination under Patent Application Backlog Reduction Stimulus Plan under the following conditions:
>
> (1) The application for which special status is sought is a Nonprovisional application that has an actual filing date earlier than October 1, 2009, in which the applicant has established small entity status under 37 CFR 1.27;
>
> (2) the applicant has another copending nonprovisional application that has an actual filing date earlier than October 1, 2009, and is complete under 37 CFR 1.53...;
>
> (3) the application for which special status is sought and the other copending nonprovisional application either are owned by the same party as of October 1, 2009, or name at least one inventor in common...; and
>
> (5) the applicant files a petition under 37 CFR 1.102 in the application for which special status is sought...."

75 Federal Register Notice 36063 (June 24, 2010) eliminates the previously noted small entity status requirement and also states, in part, that:

> "the following new requirements are added to the program...:
>
> (2) the application has not received special status for more than fourteen other applications under this program; and
>
> (3) the petition under 37 CFR 1.102 must also:
>
> (i) Include a specific identification of the relationship between the applications...;

> (ii) identify, by application number if available, the application that is being expressly abandoned;
>
> (iii) provide a statement certifying that applicant has not filed petitions in more than fourteen other applications...; and
>
> (iv) provide a statement that applicant agrees to make an election without traverse in a telephone interview..."

The original and Renewed Petitions, as is set forth further above, do not, relative to the '626 Application, state that applicant:

> has not filed petitions in more than fourteen (14) other applications requesting special status under this program (Item 5c above), and
>
> agrees to make an election without traverse in a telephonic interview if the Office determines that the claims of the application to be made special are directed to two or more independent and distinct inventions (Item 5d above).

These statements, which were made in (1) the Letters of Express Abandonment filed in the '134 Application and (2) in comments about the content such Letters of Express Abandonment in the original and Renewed Petitions, are all specifically directed to the '134 Application being abandoned and not the '626 Application for which special status is sought.

To overcome the petition deficiencies, applicant should file a further Renewed Petition that includes all the required statements specifically therein and directed to the '626 Applicant, i.e., the application for which special status is sought.

Should any further Renewed Petition to Make Special be filed, any failure to fully comply with all of the collective requirements set forth in the Federal Register Notices, may result in the issuance of a final agency action denying the requested special status.

Further correspondence with respect to this matter should be addressed as follows:

By Mail:
Mail Stop PETITION
Commissioner for Patents
P. O. Box 1450
Alexandria, VA 22313-1450

By hand:
U. S. Patent and Trademark Office
Customer Service Window, Mail Stop Petitions
Randolph Building

401 Dulany Street
Alexandria, VA 22314

By FAX: (571) 273-8300

Telephone inquires concerning this decision should be directed to Brian W. Brown at 571-272-5338.

All other inquiries concerning either examination or status of the application should be directed to the Technology Center.

The application is being forwarded to the Technology Center Art Unit 1624 for action in its regular turn.

Brian W. Brown
Petitions Examiner
Office of Petitions

UNITED STATES PATENT AND TRADEMARK OFFICE

Commissioner for Patents
United States Patent and Trademark Office
P.O. Box 1450
Alexandria, VA 22313-1450
www.uspto.gov

Algis Anilionis,
Senior Intellectual Property Counsel
Cara Therapeutics, Inc.
One Parrott Drive
Shelton CT 06484-4733

MAILED

NOV 0 1 2010

OFFICE OF PETITIONS

In re Application of :
NEWCOM, et al. :
Application No. 12/409,626 :
Filed: March 24, 2009 :
Attorney Docket No. **CTI-034** :

DECISION ON
FURTHER RENEWED PETITION
TO MAKE SPECIAL
37 CFR 1.102

This is a decision on the Further Renewed Petition under 37 CFR 1.102, filed October 21, 2010, to make the above-identified application special under the Patent Application Backlog Reduction Stimulus Plan which is a pilot program set forth at 74 Federal Register Notice 62285 (November 27, 2009) and 75 Federal register Notice 36063 (June 24, 2010).

The Further Renewed Petition is **GRANTED**.

A grantable petition to make an application special under 37 CFR 1.102 and the pilot program as set forth in 74 FR 62285 and 75 FR 36063 must be directed to a nonprovisional application filed prior to October 1, 2009.

The USPTO will accord special status for examination under Patent Application Backlog Reduction Stimulus Plan under the following conditions:

(1) The application for which special status is sought is a nonprovisional application that has an actual filing date earlier than October 1, 2009;

(2) The applicant has another copending nonprovisional application that has an actual filing date earlier than October 1, 2009, and is complete under 37 CFR 1.53;

(3) The application for which special status is sought and the other copending nonprovisional application either are owned by the same party as of October 1, 2009, or name at least one inventor in common;

(4) The applicant files a letter of express abandonment under 37 CFR 1.138(a) in the copending nonprovisional application before it has been taken up for examination and

a) include a statement that the applicant has not and will not file a new application that claims the same invention claimed in the expressly abandoned application;

b) includes with the letter of express abandonment a statement that the applicant has not and will not file an application that claims the benefit of the expressly abandoned application under any provision of title 35, United States Code, and

c) the applicant agrees not to request a refund of any fees paid in the expressly abandoned application; and

(5) The applicant files a petition under 37 CFR 1.102 in the application for which special status is sought that

a) includes a specific identification of the relationship between the applications that qualifies the application for special status;

b) identifies, by application number if available, the application that is being expressly abandoned;

c) provides a statement certifying that applicant has not filed petitions in more than fourteen (14) other applications requesting special status under this program; and

d) provides a statement that applicant agrees to make an election without traverse in a telephonic interview if the Office determines that the claims of the application to be made special are directed to two or more independent and distinct inventions.

The requirement for a fee for consideration of the petition to make special for applications pertaining to Patent Application Backlog Reduction Stimulus Plan has been waived.

The instant petition complies with the conditions required under Patent Application Backlog Reduction Stimulus Plan. Accordingly, the above-identified application has been accorded "special" status.

Telephone inquires concerning this decision should be directed to Brian W. Brown at 571-272-5338.

All other inquires concerning either the examination or status of the application should be directed to the Technology Center.

The application is being forwarded to the Office of Patent Application Processing for further processing commensurate with this decision.

Brian W. Brown
Petitions Examiner
Office of Petitions

UNITED STATES PATENT AND TRADEMARK OFFICE

Commissioner for Patents
United States Patent and Trademark Office
P.O. Box 1450
Alexandria, VA 22313-1450
www.uspto.gov

GENERAL MOTORS LLC
LEGAL STAFF
MAIL CODE 482-C23-B21
P O BOX 300
DETROIT, MI 48265-3000

MAILED

APR 06 2012

OFFICE OF PETITIONS

In re Application of
Mark A. Osborne, et al.
Application No. 12/409,726
Filed: March 24, 2009
Attorney Docket No. P006617-PTC-CHE

: DECISION GRANTING PETITION
: UNDER 37 CFR 1.313(c)(2)

This is a decision on the petition under 37 CFR 1.313(c)(2), filed April 4, 2012, to withdraw the above-identified application from issue after payment of the issue fee.

The petition is **GRANTED**.

The above-identified application is withdrawn from issue for consideration of a submission under 37 CFR 1.114 (request for continued examination). *See* 37 CFR 1.313(c)(2).

Petitioner is advised that the issue fee paid on March 5, 2012 cannot be refunded. If, however, this application is again allowed, petitioner may request that it be applied towards the issue fee required by the new Notice of Allowance.[1]

Telephone inquiries regarding this decision should be directed to undersigned at (571) 272-1642. All other inquiries concerning the examination or status of this application should be directed to the Technology Center.

This application is being referred to Technology Center AU 1735 for processing of the request for continued examination under 37 CFR 1.114 and for consideration of the concurrently filed information disclosure statement.

/AMW/
April M. Wise
Petitions Examiner
Office of Petitions

[1] *The request to apply the issue fee to the new Notice may be satisfied by completing and returning the new Part B – Fee(s) Transmittal Form (along with any balance due at the time of submission). Petitioner is advised that the Issue Fee Transmittal Form must be completed and timely submitted to avoid abandonment of the application.*

Doc Code: PPH.PCT.652
Document Description: Petition to make special under PCT-Patent Pros Hwy

PTO/SB/20PCT-KR (06-10)
Approved for use through 01/31/2012. OMB 0651-0058
U.S. Patent and Trademark Office; U. S. DEPARTMENT OF COMMERCE
Under the Paperwork Reduction Act of 1995, no persons are required to respond to a collection of information unless it displays a valid OMB control number.

REQUEST FOR PARTICIPATION IN THE PATENT COOPERATION TREATY - PATENT PROSECUTION HIGHWAY (PCT-PPH) PILOT PROGRAM BETWEEN THE KOREAN INTELLECTUAL PROPERTY OFFICE (KIPO) AND THE USPTO

Application No:	12/409,741	Filing date:	24-MAR-2009
First Named Inventor:	William C. Maier		
Title of the Invention:	High Pressure Casing Access Cover		

THIS REQUEST FOR PARTICIPATION IN THE PCT-PPH PILOT PROGRAM ALONG WITH THE REQUIRED DOCUMENTS MUST BE SUBMITTED VIA EFS-WEB. INFORMATION REGARDING EFS-WEB IS AVAILABLE AT HTTP://WWW.USPTO.GOV/EBC/EFS_HELP.HTML

APPLICANT HEREBY REQUESTS PARTICIPATION IN THE PCT-PPH PROGRAM AND PETITIONS TO MAKE THE ABOVE-IDENTIFIED APPLICATION SPECIAL UNDER THE PCT-PPH PROGRAM.

The above-identified application is (1) a national stage entry of the corresponding PCT application, or (2) a national stage entry of another PCT application which claims priority to the corresponding PCT application, or (3) a national application that claims domestic/ foreign priority to the corresponding PCT application, or (4) a national application which forms the basis for the priority claim in the corresponding PCT application, or (5) a continuing application of a U.S. application that satisfies one of (1) to (4) above, or (6) a U.S. application that claims domestic benefit to a U.S. provisional application which forms the basis for the priority claim in the corresponding PCT application.

The corresponding PCT application number(s) is/are: PCT/US2010/025650

The international filing date of the corresponding PCT application(s) is/are: 26-FEBRUARY-2010

I. List of Required Documents:

a. **A copy of the latest international work product (WO/ISA, WO/IPEA, or IPER) in the above–identified corresponding PCT application(s)**

☑ Is attached.

☐ Is not attached because the document is already in the U.S. application.

b. **A copy of all claims which were indicated as having novelty, inventive step and industrial applicability in the above-identified corresponding PCT application(s).**

☑ Is attached.

☐ Is not attached because the document is already in the U.S. application.

c. **English translations of the documents in a. and b. above are attached (if the documents are not in the English language). A statement that the English translation is accurate is attached for the document in b. above.**

This collection of information is required by 35 U.S.C. 119, 37 CFR 1.55, and 37 CFR 1.102(d). The information is required to obtain or retain a benefit by the public, which is to file (and by the USPTO to process) an application. Confidentiality is governed by 35 U.S.C. 122 and 37 CFR 1.11 and 1.14. This collection is estimated to take 2 hours to complete, including gathering, preparing, and submitting the completed application form to the USPTO. Time will vary depending upon the individual case. Any comments on the amount of time you require to complete this form and/or suggestions for reducing this burden should be sent to the Chief Information Officer, U.S. Patent and Trademark Office, U.S. Department of Commerce, P.O. Box 1450, Alexandria, VA 22313-1450. DO NOT SEND FEES OR COMPLETED FORMS TO THIS ADDRESS.

PTO/SB/20PCT-KR (06-10)
Approved for use through 01/31/2012. OMB 0651-0058
U.S.Patent and Trademark Office; U.S. DEPARTMENT OF COMMERCE
Under the Paperwork Reduction Act of 1995, no persons are required to respond to a collection of information unless it displays a valid OMB control number.

REQUEST FOR PARTICIPATION IN THE PCT-PPH PILOT PROGRAM BETWEEN THE KIPO AND THE USPTO

(continued)

Application No.:	12/409,741
First Named Inventor:	William C. Maier

d. **(1) An information disclosure statement listing the documents cited in the international work products (ISR, WO/ISA, WO/IPEA, IPER) of the corresponding PCT application.**

☑ Is attached

☐ Has already been filed in the above-identified U.S. application on _____

(2) Copies of all documents (except) for U.S. patents or U.S. patent application publications)

☑ Are attached.

☐ Have already been filed in the above-identified U.S. application on _____

II. Claims Correspondence Table:

Claims in US Application	Patentable Claims in the corresponding PCT Application	Explanation regarding the correspondence
22-36	1-15	New US claims 22-36 correspond to PCT claims 1-15, respectively.

III. All the claims in the US application sufficiently correspond to the patentable claims in the corresponding PCT application.

Signature /N. Alexander Nolte/	Date August 30, 2011
Name (Print/Typed) N. Alexander Nolte	Registration Number 45,689

Privacy Act Statement

The **Privacy Act of 1974 (P.L. 93-579)** requires that you be given certain information in connection with your submission of the attached form related to a patent application or patent. Accordingly, pursuant to the requirements of the Act, please be advised that: (1) the general authority for the collection of this information is 35 U.S.C. 2(b)(2); (2) furnishing of the information solicited is voluntary; and (3) the principal purpose for which the information is used by the U.S. Patent and Trademark Office is to process and/or examine your submission related to a patent application or patent. If you do not furnish the requested information, the U.S. Patent and Trademark Office may not be able to process and/or examine your submission, which may result in termination of proceedings or abandonment of the application or expiration of the patent.

The information provided by you in this form will be subject to the following routine uses:

1. The information on this form will be treated confidentially to the extent allowed under the Freedom of Information Act (5 U.S.C. 552) and the Privacy Act (5 U.S.C 552a). Records from this system of records may be disclosed to the Department of Justice to determine whether disclosure of these records is required by the Freedom of Information Act.
2. A record from this system of records may be disclosed, as a routine use, in the course of presenting evidence to a court, magistrate, or administrative tribunal, including disclosures to opposing counsel in the course of settlement negotiations.
3. A record in this system of records may be disclosed, as a routine use, to a Member of Congress submitting a request involving an individual, to whom the record pertains, when the individual has requested assistance from the Member with respect to the subject matter of the record.
4. A record in this system of records may be disclosed, as a routine use, to a contractor of the Agency having need for the information in order to perform a contract. Recipients of information shall be required to comply with the requirements of the Privacy Act of 1974, as amended, pursuant to 5 U.S.C. 552a(m).
5. A record related to an International Application filed under the Patent Cooperation Treaty in this system of records may be disclosed, as a routine use, to the International Bureau of the World Intellectual Property Organization, pursuant to the Patent Cooperation Treaty.
6. A record in this system of records may be disclosed, as a routine use, to another federal agency for purposes of National Security review (35 U.S.C. 181) and for review pursuant to the Atomic Energy Act (42 U.S.C. 218(c)).
7. A record from this system of records may be disclosed, as a routine use, to the Administrator, General Services, or his/her designee, during an inspection of records conducted by GSA as part of that agency's responsibility to recommend improvements in records management practices and programs, under authority of 44 U.S.C. 2904 and 2906. Such disclosure shall be made in accordance with the GSA regulations governing inspection of records for this purpose, and any other relevant (*i.e.*, GSA or Commerce) directive. Such disclosure shall not be used to make determinations about individuals.
8. A record from this system of records may be disclosed, as a routine use, to the public after either publication of the application pursuant to 35 U.S.C. 122(b) or issuance of a patent pursuant to 35 U.S.C. 151. Further, a record may be disclosed, subject to the limitations of 37 CFR 1.14, as a routine use, to the public if the record was filed in an application which became abandoned or in which the proceedings were terminated and which application is referenced by either a published application, an application open to public inspection or an issued patent.
9. A record from this system of records may be disclosed, as a routine use, to a Federal, State, or local law enforcement agency, if the USPTO becomes aware of a violation or potential violation of law or regulation.

UNITED STATES PATENT AND TRADEMARK OFFICE

UNITED STATES DEPARTMENT OF COMMERCE
United States Patent and Trademark Office
Address: COMMISSIONER FOR PATENTS
P.O. Box 1450
Alexandria, Virginia 22313-1450
www.uspto.gov

APPLICATION NO.	FILING DATE	FIRST NAMED INVENTOR	ATTORNEY DOCKET NO.	CONFIRMATION NO.
12/409,741	03/24/2009	William C. Maier	42495.26	1961

60935 7590 09/15/2011

Edmonds Nolte, PC
16815 ROYAL CREST DRIVE
SUITE 130
HOUSTON, TX 77058

EXAMINER	
KERSHTEYN, IGOR	

ART UNIT	PAPER NUMBER
3745	

NOTIFICATION DATE	DELIVERY MODE
09/15/2011	ELECTRONIC

Please find below and/or attached an Office communication concerning this application or proceeding.

The time period for reply, if any, is set in the attached communication.

Notice of the Office communication was sent electronically on above-indicated "Notification Date" to the following e-mail address(es):

docketing@edmondsnolte.com

'UNITED STATES PATENT AND TRADEMARK OFFICE

Commissioner for Patents
United States Patent and Trademark Office
P.O. Box 1450
Alexandria, VA 22313-1450
www.uspto.gov

Edmonds Nolte, PC
16815 ROYAL CREST DRIVE
SUITE 130
HOUSTON TX 77058

In re Application of	:	
MAIER, WILLIAM C	:	DECISION ON REQUEST TO
Application No. 12/409,741	:	PARTICIPATE IN PATENT
Filed: March 24, 2009	:	PCT/PROSECUTION HIGHWAY
Attorney Docket No. **42495.26**	:	PROGRAM AND PETITION
For: HIGH PRESSURE CASING ACCESS INTERNAL COMBUSTION COVER	:	TO MAKE SPECIAL UNDER 37 CFR 1.102(a)

This is a decision on the request to participate in the Patent Prosecution Highway (PPH) program and the petition under 37 CFR 1.102(a), filed August 30, 2011 to make the above-identified application special.

The request and petition are granted.

A grantable request to participate in the PPH pilot program and petition to make special require:

(1) The U.S. application must validly claim priority under 35 U.S.C. 119(a) to one or more applications filed in the JPO;
(2) Applicant must submit a copy of the allowable/patentable claim(s) from the JPO/PCT application(s) along with an English translation thereof and a statement that the English translation is accurate;
(3) All the claims in the U.S. application must sufficiently correspond or be amended to sufficiently correspond to the allowable/patentable claim(s) in the JPO application(s);
(4) Examination of the U.S. application has not begun;
(5) Applicant must submit a copy of all the office actions from each of the JPO/PCT application(s) containing the allowable/patentable claim(s) along with an English translation thereof and a statement that the English translation is accurate; and
(6) Applicant must submit an IDS listing the documents cited by the JPO examiner in the JPO office action along with copies of documents except U.S. patents or U.S. patent application publications.
In light of the petition being properly submitted, the request to participate in the PPH program and the petition comply with the above requirements. Accordingly, the above-identified application has been accorded "special" status.

The applicant is encouraged to cite and submit all relevant prior art references, if any, to facilitate examination in this application. Upon completion of pre-examination processing, this application will be forwarded to an examiner for examination.

Telephone inquiries concerning this decision should be directed to Henry C. Yuen at 571-272-4485. All other inquiries concerning the examination or status of the application should be directed to Edward Look, SPE of Art Unit 3745, and 571-272-4820 for Class 415 and also accessible in the PAIR system at http://www.uspto.gov/ebc.index.html.

Petition is **granted**.

/Henry C. Yuen/

_____

Henry C. Yuen, Special Programs Examiner
Technology Center 3700 – Mechanical Engineering,
Manufacturing and Products
571-272-4856

UNITED STATES PATENT AND TRADEMARK OFFICE

Commissioner for Patents
United States Patent and Trademark Office
P.O. Box 1450
Alexandria, VA 22313-1450
www.uspto.gov

TUNG & ASSOCIATES / RANDY W. TUNG, ESQ.
838 W. LONG LAKE ROAD
SUITE 120
BLOOMFIELD HILLS MI 48302

SEP 26 2011

In re Application of
BURPO, STEVEN J., et al. :
Application No. 12/409,742 :
Filed: March 24, 2009 :
Attorney Docket No.: 08-1134 (82,000-257) :

DECISION ON PETITION

This is a decision on the Petition To Withdraw Holding Of Abandonment received in the United States Patent and Trademark Office (USPTO) on September 15, 2011.

The petition is **GRANTED**.

The application was held abandoned for failure to timely pay the issue fee as required by the Notice of Allowance and Fee(s) Due mailed May 27, 2011, which set forth a three (3) month statutory period for reply. Accordingly, the Notice of Abandonment was mailed on September 9, 2011.

Petitioner states that the issue fee transmittal and payment were timely filed via the USPTO on August 12, 2011. Petitioner submitted a copy of the original submission which included a properly completed Certificate of Mailing/Transmission.

In view of the foregoing, the holding of abandonment for failure to timely pay the issue fee is hereby withdrawn and the application restored to pending status.

Telephone inquires concerning this decision be directed to the undersigned in the Office of Patent Publication at 703-756-1547.

Kay D. Pinkney
Application Assistance Unit
Office of Data Management

UNITED STATES PATENT AND TRADEMARK OFFICE

Commissioner for Patents
United States Patent and Trademark Office
P.O. Box 1450
Alexandria, VA 22313-1450
www.uspto.gov

HAYNES AND BOONE, LLP
IP SECTION
2323 VICTORY AVENUE
SUITE 700
DALLAS, TX 75219

MAILED

JAN 18 2011

OFFICE OF PETITIONS

In re Application of :
Daniel Hammons :
Application No. 12/409,755 : DECISION ON PETITION
Filed: March 24, 2009 : TO WITHDRAW
Attorney Docket No. 41883.3 : FROM RECORD
:

This is a decision on the Request to Withdraw as attorney or agent of record under 37 C.F.R. § 1.36(b), filed December 6, 2010.

The request is **APPROVED**.

The request was signed by Alan N. Herda on behalf of the practitioners of record associated with Customer Number 27683.

Applicant is reminded that there is no attorney of record at this time.

All future correspondence will be directed to inventor Daniel Hammons at the address indicated below.

Telephone inquiries concerning this decision should be directed to Irvin Dingle at (571) 272-3210.

Irvin Dingle
Petitions Examiner
Office of Petitions

cc: Daniel Hammons
5801 County Road 1017
Joshua, TX 76058-6040

UNITED STATES PATENT AND TRADEMARK OFFICE

UNITED STATES DEPARTMENT OF COMMERCE
United States Patent and Trademark Office
Address: COMMISSIONER FOR PATENTS
P.O. Box 1450
Alexandria, Virginia 22313-1450
www.uspto.gov

APPLICATION NUMBER	FILING OR 371(C) DATE	FIRST NAMED APPLICANT	ATTY. DOCKET NO./TITLE
12/409,755	03/24/2009	Daniel Hammons	41883.3

CONFIRMATION NO. 1979

POWER OF ATTORNEY NOTICE

27683
HAYNES AND BOONE, LLP
IP Section
2323 Victory Avenue
Suite 700
Dallas, TX 75219

Date Mailed: 01/18/2011

NOTICE REGARDING CHANGE OF POWER OF ATTORNEY

This is in response to the Power of Attorney filed 12/06/2010.

- The withdrawal as attorney in this application has been accepted. Future correspondence will be mailed to the new address of record. 37 CFR 1.33.

/idingle/

Office of Data Management, Application Assistance Unit (571) 272-4000, or (571) 272-4200, or 1-888-786-0101

UNITED STATES PATENT AND TRADEMARK OFFICE

UNITED STATES DEPARTMENT OF COMMERCE
United States Patent and Trademark Office
Address: COMMISSIONER FOR PATENTS
P.O. Box 1450
Alexandria, Virginia 22313-1450
www.uspto.gov

APPLICATION NUMBER	FILING OR 371(C) DATE	FIRST NAMED APPLICANT	ATTY. DOCKET NO./TITLE
12/409,755	03/24/2009	Daniel Hammons	41883.3

CONFIRMATION NO. 1979

DANIEL HAMMONS
5801 COUNTY ROAD 1017
JOSHUA, TX 76058-6040

POA ACCEPTANCE LETTER

OC000000045465842

Date Mailed: 01/18/2011

NOTICE OF ACCEPTANCE OF POWER OF ATTORNEY

This is in response to the Power of Attorney filed 12/06/2010.

The Power of Attorney in this application is accepted. Correspondence in this application will be mailed to the above address as provided by 37 CFR 1.33.

/idingle/

Office of Data Management, Application Assistance Unit (571) 272-4000, or (571) 272-4200, or 1-888-786-0101

UNITED STATES PATENT AND TRADEMARK OFFICE

UNITED STATES DEPARTMENT OF COMMERCE
United States Patent and Trademark Office
Address: COMMISSIONER FOR PATENTS
P.O. Box 1450
Alexandria, Virginia 22313-1450
www.uspto.gov

APPLICATION NO.	FILING DATE	FIRST NAMED INVENTOR	ATTORNEY DOCKET NO.	CONFIRMATION NO.
12/409,778	03/24/2009	Toshiki FUJIYOSHI	MNL-2018-2271	2015

7590 12/09/2010

NIXON & VANDERHYE, PC
901 NORTH GLEBE ROAD, 11TH FLOOR
ARLINGTON, VA 22203

EXAMINER	
ESHETE, ZELALEM	
ART UNIT	**PAPER NUMBER**
3748	
MAIL DATE	**DELIVERY MODE**
12/09/2010	PAPER

DECISION GRANTING PETITION UNDER 37 CFR 1.138(d)

The declaration of express abandonment is recognized

This is in response to the petition under 37 CFR 1.138(d), requesting for a refund of any previously paid search fee and excess claims fee in the above-identified application.

The petition is granted.

The express abandonment is recognized. Any previously paid search fee and excess claims fee are hereby refunded.

Telephone inquiries should be directed to the Office of Data Management at (571) 272-4200.

Mimi Farmer

Patent Publication Branch
Office of Data Management

SPE RESPONSE FOR CERTIFICATE OF CORRECTION

Paper No.: _____

DATE : 12/18/10

TO SPE OF : ART UNIT 3765

SUBJECT : Request for Certificate of Correction for Appl. No.: 12409814 Patent No.: 7766053

CofC mailroom date:
12/07/10

Please respond to this request for a certificate of correction within 7 days.

FOR IFW FILES:

Please review the requested changes/corrections as shown in the **COCIN** document(s) in the IFW application image. No new matter should be introduced, nor should the scope or meaning of the claims be changed.

Please complete the response (see below) and forward the completed response to scanning using document code **COCX**.

FOR PAPER FILES:

Please review the requested changes/corrections as shown in the attached certificate of correction. Please complete this form (see below) and forward it with the file to:

Certificates of Correction Branch (CofC)
Randolph Square – 9D10-A
Palm Location 7580
You can fax the Directors/SPE response to 571-270-9990

Lamonte Newsome
Certificates of Correction Branch
571-272-3421

Thank You For Your Assistance

The request for issuing the above-identified correction(s) is hereby:
Note your decision on the appropriate box.

☒ **Approved**	**All** changes apply.
☐ **Approved in Part**	Specify below which changes **do not** apply.
☐ **Denied**	State the reasons for denial below.

Comments: _____

_____

_____

SPE RESPONSE FOR CERTIFICATE OF CORRECTION

1/20/11

GARY L. WELCH
SUPERVISORY PATENT EXAMINER
TECHNOLOGY CENTER 3700

UNITED STATES PATENT AND TRADEMARK OFFICE

Commissioner for Patents
United States Patent and Trademark Office
P.O. Box 1450
Alexandria, VA 22313-1450
www.uspto.gov

MAILED

SEP 13 2010

OFFICE OF PETITIONS

MATTINGLY & MALUR, P.C.
1800 DIAGONAL ROAD
SUITE 370
ALEXANDRIA VA 22314

In re Application of :
Jonathan Betts-LaCroix :
Application No. 12/409,890 : DECISION ON PETITION
Filed: March 24, 2009 :
Attorney Docket No. OQO-6042-02 :

This is a decision on the petition under the unintentional provisions of 37 CFR 1.137(b), filed August 11, 2010, to revive the above-identified application.

The petition is **GRANTED**.

The application became abandoned for failure to reply in a timely manner to the Notice to File Missing Parts of Non-Provisional Application (Notice), mailed April 8, 2009. The Notice set a period for reply of two (2) months from the mail date of the Notice. No extensions of time under the provisions of 37 CFR 1.136(a) was obtained. Accordingly, the application became abandoned on June 9, 2009. A Notice of Abandonment was mailed January 28, 2010.

The petition satisfies the requirements of 37 CFR 1.137(b) in that petitioner has supplied (1) the reply in the form of an examination fee of $110, a search fee of $270, a basic filing fee of $82, and a surcharge fee of $65 (2) the petition fee of $810, and (3) a proper statement of unintentional delay. Accordingly the fees are accepted as being unintentionally delayed.

This application is being referred to the Office of Patent Application Processing for appropriate action in the normal course of business on the reply received August 11, 2010. Inquires regarding the status of the application should be directed to 571-272-4000.

/Kimberly Inabinet/

Kimberly Inabinet
Petitions Examiner
Office of Petitions

UNITED STATES PATENT AND TRADEMARK OFFICE

Commissioner for Patents
United States Patent and Trademark Office
P.O. Box 1450
Alexandria, VA 22313-1450
www.uspto.gov

MATTINGLY & MALUR, PC
1800 DIAGONAL ROAD
SUITE 370
ALEXANDRIA, VA 22314

MAILED

MAY 3 1 2011

OFFICE OF PETITIONS

In re Application of :
Jonathan Betts-Lacroix :
Application No. 12/409,890 : DECISION ON PETITIONS
Filed: March 24, 2009 : UNDER 37 CFR 1.78(a)(3) AND (a)(6)
Attorney Docket No. OQO-6042-02 :

This is a decision on the petitions filed January 31, 2011, which are being treated as petitions under 37 CFR §§ 1.78(a)(3) and 1.78(a)(6), to accept an unintentionally delayed claim under 35 U.S.C. §§120 and 119(e) for the benefit of the prior-filed nonprovisional and provisional applications set forth in the concurrently filed Application Data Sheet.

The petitions are **GRANTED.**

A petition for acceptance of a claim for late priority under 37 CFR §§ 1.78(a)(3) and 1.78(a)(6) is only applicable to those applications filed on or after November 29, 2000. Further, the petition is appropriate only after the expiration of the period specified in 37 CFR §§ 1.78(a)(2)(ii) and 1.78(a)(5)(ii). In addition, the petition under 37 CFR §§ 1.78(a)(3) and 1.78(a)(6) must be accompanied by:

(1) the reference required by 35 U.S.C. §§ 120 and 119(e) and 37 CFR §§ 1.78(a)(2)(i) and 1.78(a)(5)(i) of the prior-filed application, unless previously submitted;
(2) the surcharge set forth in § 1.17(t); and
(3) a statement that the entire delay between the date the claim was due under 37 CFR §§ 1.78(a)(2)(ii) and 1.78(a)(5)(ii) and the date the claim was filed was unintentional. The Director may require additional information where there is a question whether the delay was unintentional.

Additionally, the instant nonprovisional application must be pending at the time of filing of the reference to the prior-filed provisional application as required by 37 CFR 1.78(a)(5)(ii). Further, the nonprovisional application claiming the benefit of the prior-filed provisional application must have been filed within twelve months of the filing date of the prior-filed provisional application.

All the above requirements having been satisfied, the late claim for benefit of priority under 35 U.S.C. §§ 120 and 119(e) is accepted as being unintentionally delayed.

The granting of the petition to accept the delayed benefit claim to the prior-filed applications under 37 CFR §§ 1.78(a)(3) and 1.78(a)(6) should not be construed as meaning that this application is entitled to the benefit of the filing date of the prior-filed applications. In order for this application to be entitled to the benefit of the prior-filed applications, all other requirements under 35 U.S.C. §§120 and 1.78(a)(1) and (a)(2) and under 35 U.S.C. §119(e) and 37 CFR 1.78(a)(4) and (a)(5) must be met. Similarly, the fact that the corrected Filing Receipt accompanying this decision on petition includes the prior-filed applications should not be construed as meaning that applicant is entitled to the claim for benefit of priority to the prior-filed applications noted thereon. Accordingly, the examiner will, in due course, consider this benefit claim and determine whether the application is entitled to the benefit of the earlier filing date.

A corrected Filing Receipt, which includes the priority claim to the prior-filed applications, accompanies this decision on petition.

Any questions concerning this matter may be directed to Irvin Dingle at (571) 272-3210. All other inquiries concerning either the examination procedures or status of the application should be directed to the Technology Center.

This application is being referred to Technology Center Art Unit 2432 for consideration by the examiner of the claim under 35 U.S.C. § §120 and 119(e) of the prior-filed nonprovisional and provisional applications.

David Bucci
Petition Examiner
Office of Petitions

ATTACHMENT : Corrected Filing Receipt

UNITED STATES PATENT AND TRADEMARK OFFICE

UNITED STATES DEPARTMENT OF COMMERCE
United States Patent and Trademark Office
Address: COMMISSIONER FOR PATENTS
P.O. Box 1450
Alexandria, Virginia 22313-1450
www.uspto.gov

APPLICATION NUMBER	FILING or 371(c) DATE	GRP ART UNIT	FIL FEE REC'D	ATTY.DOCKET.NO	TOT CLAIMS	IND CLAIMS
12/409,890	03/24/2009	2432	527	OQO-6042-02	20	2

CONFIRMATION NO. 2218

CORRECTED FILING RECEIPT

24956
MATTINGLY & MALUR, PC
1800 DIAGONAL ROAD
SUITE 370
ALEXANDRIA, VA 22314

Date Mailed: 05/31/2011

Receipt is acknowledged of this non-provisional patent application. The application will be taken up for examination in due course. Applicant will be notified as to the results of the examination. Any correspondence concerning the application must include the following identification information: the U.S. APPLICATION NUMBER, FILING DATE, NAME OF APPLICANT, and TITLE OF INVENTION. Fees transmitted by check or draft are subject to collection. Please verify the accuracy of the data presented on this receipt. **If an error is noted on this Filing Receipt, please submit a written request for a Filing Receipt Correction. Please provide a copy of this Filing Receipt with the changes noted thereon. If you received a "Notice to File Missing Parts" for this application, please submit any corrections to this Filing Receipt with your reply to the Notice. When the USPTO processes the reply to the Notice, the USPTO will generate another Filing Receipt incorporating the requested corrections**

Applicant(s)

Jonathan Betts-LaCroix, Chatsworth, CA;

Assignment For Published Patent Application

OQO, INC., San Francisco, CA

Power of Attorney: The patent practitioners associated with Customer Number 24956

Domestic Priority data as claimed by applicant

This application is a CON of 11/029,559 01/05/2005 ABN
which claims benefit of 60/534,351 01/05/2004

Foreign Applications (You may be eligible to benefit from the **Patent Prosecution Highway** program at the USPTO. Please see http://www.uspto.gov for more information.)

If Required, Foreign Filing License Granted: 04/03/2009

The country code and number of your priority application, to be used for filing abroad under the Paris Convention, is **US 12/409,890**

Projected Publication Date: Not Applicable

Non-Publication Request: No

Early Publication Request: No
**** SMALL ENTITY ****

Title

CONNECTOR INCLUDING ELECTRONIC DEVICE

Preliminary Class

713

PROTECTING YOUR INVENTION OUTSIDE THE UNITED STATES

Since the rights granted by a U.S. patent extend only throughout the territory of the United States and have no effect in a foreign country, an inventor who wishes patent protection in another country must apply for a patent in a specific country or in regional patent offices. Applicants may wish to consider the filing of an international application under the Patent Cooperation Treaty (PCT). An international (PCT) application generally has the same effect as a regular national patent application in each PCT-member country. The PCT process **simplifies** the filing of patent applications on the same invention in member countries, but **does not result** in a grant of "an international patent" and does not eliminate the need of applicants to file additional documents and fees in countries where patent protection is desired.

Almost every country has its own patent law, and a person desiring a patent in a particular country must make an application for patent in that country in accordance with its particular laws. Since the laws of many countries differ in various respects from the patent law of the United States, applicants are advised to seek guidance from specific foreign countries to ensure that patent rights are not lost prematurely.

Applicants also are advised that in the case of inventions made in the United States, the Director of the USPTO must issue a license before applicants can apply for a patent in a foreign country. The filing of a U.S. patent application serves as a request for a foreign filing license. The application's filing receipt contains further information and guidance as to the status of applicant's license for foreign filing.

Applicants may wish to consult the USPTO booklet, "General Information Concerning Patents" (specifically, the section entitled "Treaties and Foreign Patents") for more information on timeframes and deadlines for filing foreign patent applications. The guide is available either by contacting the USPTO Contact Center at 800-786-9199, or it can be viewed on the USPTO website at http://www.uspto.gov/web/offices/pac/doc/general/index.html.

For information on preventing theft of your intellectual property (patents, trademarks and copyrights), you may wish to consult the U.S. Government website, http://www.stopfakes.gov. Part of a Department of Commerce initiative, this website includes self-help "toolkits" giving innovators guidance on how to protect intellectual property in specific countries such as China, Korea and Mexico. For questions regarding patent enforcement issues, applicants may call the U.S. Government hotline at 1-866-999-HALT (1-866-999-4158).

LICENSE FOR FOREIGN FILING UNDER

Title 35, United States Code, Section 184

Title 37, Code of Federal Regulations, 5.11 & 5.15

GRANTED

The applicant has been granted a license under 35 U.S.C. 184, if the phrase "IF REQUIRED, FOREIGN FILING LICENSE GRANTED" followed by a date appears on this form. Such licenses are issued in all applications where the conditions for issuance of a license have been met, regardless of whether or not a license may be required as

set forth in 37 CFR 5.15. The scope and limitations of this license are set forth in 37 CFR 5.15(a) unless an earlier license has been issued under 37 CFR 5.15(b). The license is subject to revocation upon written notification. The date indicated is the effective date of the license, unless an earlier license of similar scope has been granted under 37 CFR 5.13 or 5.14.

This license is to be retained by the licensee and may be used at any time on or after the effective date thereof unless it is revoked. This license is automatically transferred to any related applications(s) filed under 37 CFR 1.53(d). This license is not retroactive.

The grant of a license does not in any way lessen the responsibility of a licensee for the security of the subject matter as imposed by any Government contract or the provisions of existing laws relating to espionage and the national security or the export of technical data. Licensees should apprise themselves of current regulations especially with respect to certain countries, of other agencies, particularly the Office of Defense Trade Controls, Department of State (with respect to Arms, Munitions and Implements of War (22 CFR 121-128)); the Bureau of Industry and Security, Department of Commerce (15 CFR parts 730-774); the Office of Foreign AssetsControl, Department of Treasury (31 CFR Parts 500+) and the Department of Energy.

NOT GRANTED

No license under 35 U.S.C. 184 has been granted at this time, if the phrase "IF REQUIRED, FOREIGN FILING LICENSE GRANTED" DOES NOT appear on this form. Applicant may still petition for a license under 37 CFR 5.12, if a license is desired before the expiration of 6 months from the filing date of the application. If 6 months has lapsed from the filing date of this application and the licensee has not received any indication of a secrecy order under 35 U.S.C. 181, the licensee may foreign file the application pursuant to 37 CFR 5.15(b).

UNITED STATES PATENT AND TRADEMARK OFFICE

Commissioner for Patents
United States Patent and Trademark Office
P.O. Box 1450
Alexandria, VA 22313-1450
www.uspto.gov

GENERAL ELECTRIC COMPANY
GE AVIATION
ONE NEUMANN WAY MD F16
CINCINNATI OH 45215

MAILED

NOV 16 2010

OFFICE OF PETITIONS

In re Application of :
Peretti et al. :
Application No. 12/409,927 : DECISION ON PETITION
Filed: March 24, 2009 :
Attorney Docket No. 234087-2 :

This is a decision on the petition under the unintentional provisions of 37 CFR 1.137(b), filed September 17, 2010, to revive the above-identified application.

The petition is **DISMISSED**.

Any request for reconsideration of this decision must be submitted within TWO (2) MONTHS from the mail date of this decision. Extensions of time under 37 CFR 1.136(a) are permitted. The reconsideration request should include a cover letter entitled "Renewed Petition under 37 CFR 1.137(b)." This is **not** a final agency action within the meaning of 5 U.S.C. § 704.

This above-identified application became abandoned for failure to file a response to a Notice to File Missing Parts of Nonprovisional Application, which was mailed on January 6, 2010. The Notice to File Missing Parts set an extendable two (2) month period for reply. No timely request for extension of time was obtained under the provisions of 37 CFR §1.136(a). Accordingly, this application became abandoned on March 7, 2010. A Notice of Abandonment was mailed on September 7, 2010.

A grantable petition under 37 CFR 1.137(b) must be accompanied by: (1) the required reply, unless previously filed; (2) the petition fee as set forth in 37 CFR 1.17(m); (3) a statement that the entire delay in filing the required reply from the due date for the reply until the filing of a grantable petition pursuant to 37 CFR 1.137(b) was unintentional; and (4) any terminal disclaimer (and fee as set forth in 37 CFR 1.20(d)) required by 37 CFR 1.137(c). Where there is a question as to whether either the abandonment or the delay in filing a petition under 37 CFR 1.137 was unintentional, the Director may require additional information. See MPEP 711.03 (c)(III)(c) and (D).

The instant petition lacks item(s) (1).

As to item (1), although a declaration was submitted on petition, the declaration presented is incomplete as page 4 of 4 has not been presented.

An extension of time under 37 CFR 1.136 must be filed prior to the expiration of the maximum extendable period for reply. *See* In re Application of S., 8 USPQ2d 1630, 1631 (Comm'r Pats. 1988). Since the $2,350.00 extension of time fee submitted with the petition on August 31, 2010 was subsequent to the maximum extendable period for reply, this fee is unnecessary and will be credited to petitioner's deposit account.

Further correspondence with respect to this matter should be addressed as follows:

By Mail: Mail Stop PETITION
Commissioner for Patents
P. O. Box 1450
Alexandria, VA 22313-1450

By hand: U. S. Patent and Trademark Office
Customer Service Window, Mail Stop Petitions
Randolph Building
401 Dulany Street
Alexandria, VA 22314

The centralized facsimile number is **(571) 273-8300.**

Telephone inquiries concerning this decision should be directed to the undersigned at (571) 272-3215.

Charlema Grant
Petitions Attorney
Office of Petitions

UNITED STATES PATENT AND TRADEMARK OFFICE

Commissioner for Patents
United States Patent and Trademark Office
P.O. Box 1450
Alexandria, VA 22313-1450
www.uspto.gov

GENERAL ELECTRIC COMPANY
GE AVIATION
ONE NEUMANN WAY MD F16
CINCINNATI OH 45215

MAILED

FEB 28 2011

OFFICE OF PETITIONS

In re Application of :
Peretti et al. :
Application No. 12/409,927 : DECISION ON PETITION
Filed: March 24, 2009 :
Attorney Docket No. 234087-2 :

This is a decision on the renewed petition under the unintentional provisions of 37 CFR 1.137(b), filed January 18, 2011, to revive the above-identified application.

The petition is **GRANTED**.

This above-identified application became abandoned for failure to file a response to a Notice to File Missing Parts of Nonprovisional Application, which was mailed on January 6, 2010. The Notice to File Missing Parts set an extendable two (2) month period for reply. No timely request for extension of time was obtained under the provisions of 37 CFR §1.136(a). Accordingly, this application became abandoned on March 7, 2010. A Notice of Abandonment was mailed on September 7, 2010. A petition filed under 37 CFR 1.137(b) was dismissed on November 15, 2010.

The petition satisfies the requirements of 37 CFR 1.137(b) in that petitioner has supplied (1) the reply in the form of the declaration and surcharge (2) the petition fee of $1620, and (3) a proper statement of unintentional delay.

This application is being referred to the Office of Patent Application Processing for pre-examination processing.

Telephone inquiries concerning this decision should be directed to the undersigned at (571) 272-3215.

Charlema Grant
Petitions Attorney
Office of Petitions

Doc Code: PPH.PCT.652
Document Description: Petition to make special under PCT-Patent Pros Hwy

PTO/SB/20PCT-EP (05-10)
Approved for use through 01/31/2012. OMB 0651-0058
U.S. Patent and Trademark Office; U.S. DEPARTMENT OF COMMERCE
Under the Paperwork Reduction Act of 1995, no persons are required to respond to a collection of information unless it displays a valid OMB control number.

REQUEST FOR PARTICIPATION IN THE PATENT COOPERATION TREATY - PATENT PROSECUTION HIGHWAY (PCT-PPH) PILOT PROGRAM BETWEEN THE EUROPEAN PATENT OFFICE (EPO) AND THE USPTO

Application No:	12409929	Filing date:	March 24, 2009
First Named Inventor:	O'Hara, Kevin Swayne		
Title of the Invention:	SUPER OXIDATION AND CYCLIC DAMAGE RESISTANT NICKEL-BASE SUPERALLOY AND ARTICLE		

THIS REQUEST FOR PARTICIPATION IN THE PCT-PPH PILOT PROGRAM ALONG WITH THE REQUIRED DOCUMENTS MUST BE SUBMITTED VIA EFS-WEB. INFORMATION REGARDING EFS-WEB IS AVAILABLE AT HTTP://WWW.USPTO.GOV/EBC/EFS_HELP.HTML

APPLICANT HEREBY REQUESTS PARTICIPATION IN THE PCT-PPH PROGRAM AND PETITIONS TO MAKE THE ABOVE-IDENTIFIED APPLICATION SPECIAL UNDER THE PCT-PPH PROGRAM.

The above-identified application is (1) a national stage entry of the corresponding PCT application, or (2) a national stage entry of another PCT application which claims priority to the corresponding PCT application, or (3) a national application that claims domestic/ foreign priority to the corresponding PCT application, or (4) a national application which forms the basis for the priority claim in the corresponding PCT application, or (5) a continuing application of a U.S. application that satisfies one of (1) to (4) above, or (6) a U.S. application that claims domestic benefit to a U.S. provisional application which forms the basis for the priority claim in the corresponding PCT application.

The corresponding PCT application number(s) is/are: PCT/US2010/028202

The international date of the corresponding PCT application(s) is/are: March 23,2010

I. List of Required Documents:

a. **A copy of the latest international work product (WO/ISA, WO/IPEA, or IPER) in the above–identified corresponding PCT application(s)**

☐ Is attached

☑ Is not attached because the document is already in the U.S. application.

b. **A copy of all claims which were indicated as having novelty, inventive step and industrial applicability in the above-identified corresponding PCT application(s).**

☑ Is attached.

☐ Is not attached because the document is already in the U.S. application.

c. **English translations of the documents in a. and b. above are attached (if the documents are not in the English language). A statement that the English translation is accurate is attached for the document in b. above.**

This collection of information is required by 35 U.S.C. 119, 37 CFR 1.55, and 37 CFR 1.102(d). The information is required to obtain or retain a benefit by the public, which is to file (and by the USPTO to process) an application. Confidentiality is governed by 35 U.S.C. 122 and 37 CFR 1.11 and 1.14. This collection is estimated to take 2 hours to complete, including gathering, preparing, and submitting the completed application form to the USPTO. Time will vary depending upon the individual case. Any comments on the amount of time you require to complete this form and/or suggestions for reducing this burden should be sent to the Chief Information Officer, U.S. Patent and Trademark Office, U.S. Department of Commerce, P.O. Box 1450, Alexandria, VA 22313-1450. DO NOT SEND FEES OR COMPLETED FORMS TO THIS ADDRESS.

PTO/SB/20PCT-EP (05-10)
Approved for use through 01/31/2012. OMB 0651-0058
U.S.Patent and Trademark Office; U.S. DEPARTMENT OF COMMERCE
Under the Paperwork Reduction Act of 1995, no persons are required to respond to a collection of information unless it displays a valid OMB control number.

REQUEST FOR PARTICIPATION IN THE PCT-PPH PILOT PROGRAM BETWEEN THE EPO AND THE USPTO

(continued)

Application No.:	12409929
First Named Inventor:	O'Hara, Kevin Swayne

d (1) **An information disclosure statement listing the documents cited in the international work products (ISR, WO/ISA, WO/IPEA, IPER) of the corresponding PCT application.**

☐ is attached

☑ Has already been filed in the above-identified U.S. application on August 3, 2010

(2) Copies of all documents (except) for U.S. patents or U.S. patent application publications)

☐ Are attached.

☑ Have already been filed in the above-identified U.S. application on August 3, 2010

II. Claims Correspondence Table:

Claims in US Application	Patentable Claims in the corresponding PCT Application	Explanation regarding the correspondence
1 to 17		Claims 1 to 17 of PCT/US2010/028202 correspond to US Claim

III. All the claims in the US application sufficiently correspond to the patentable claims in the corresponding PCT application.

Signature /mmg38162/	Date September 10, 2010
Name (Print/Typed) Michael M. Gnibus	Registration Number 38,162

Privacy Act Statement

The **Privacy Act of 1974 (P.L. 93-579)** requires that you be given certain information in connection with your submission of the attached form related to a patent application or patent. Accordingly, pursuant to the requirements of the Act, please be advised that: (1) the general authority for the collection of this information is 35 U.S.C. 2(b)(2); (2) furnishing of the information solicited is voluntary; and (3) the principal purpose for which the information is used by the U.S. Patent and Trademark Office is to process and/or examine your submission related to a patent application or patent. If you do not furnish the requested information, the U.S. Patent and Trademark Office may not be able to process and/or examine your submission, which may result in termination of proceedings or abandonment of the application or expiration of the patent.

The information provided by you in this form will be subject to the following routine uses:

1. The information on this form will be treated confidentially to the extent allowed under the Freedom of Information Act (5 U.S.C. 552) and the Privacy Act (5 U.S.C 552a). Records from this system of records may be disclosed to the Department of Justice to determine whether disclosure of these records is required by the Freedom of Information Act.
2. A record from this system of records may be disclosed, as a routine use, in the course of presenting evidence to a court, magistrate, or administrative tribunal, including disclosures to opposing counsel in the course of settlement negotiations.
3. A record in this system of records may be disclosed, as a routine use, to a Member of Congress submitting a request involving an individual, to whom the record pertains, when the individual has requested assistance from the Member with respect to the subject matter of the record.
4. A record in this system of records may be disclosed, as a routine use, to a contractor of the Agency having need for the information in order to perform a contract. Recipients of information shall be required to comply with the requirements of the Privacy Act of 1974, as amended, pursuant to 5 U.S.C. 552a(m).
5. A record related to an International Application filed under the Patent Cooperation Treaty in this system of records may be disclosed, as a routine use, to the International Bureau of the World Intellectual Property Organization, pursuant to the Patent Cooperation Treaty.
6. A record in this system of records may be disclosed, as a routine use, to another federal agency for purposes of National Security review (35 U.S.C. 181) and for review pursuant to the Atomic Energy Act (42 U.S.C. 218(c)).
7. A record from this system of records may be disclosed, as a routine use, to the Administrator, General Services, or his/her designee, during an inspection of records conducted by GSA as part of that agency's responsibility to recommend improvements in records management practices and programs, under authority of 44 U.S.C. 2904 and 2906. Such disclosure shall be made in accordance with the GSA regulations governing inspection of records for this purpose, and any other relevant (*i.e.*, GSA or Commerce) directive. Such disclosure shall not be used to make determinations about individuals.
8. A record from this system of records may be disclosed, as a routine use, to the public after either publication of the application pursuant to 35 U.S.C. 122(b) or issuance of a patent pursuant to 35 U.S.C. 151. Further, a record may be disclosed, subject to the limitations of 37 CFR 1.14, as a routine use, to the public if the record was filed in an application which became abandoned or in which the proceedings were terminated and which application is referenced by either a published application, an application open to public inspection or an issued patent.
9. A record from this system of records may be disclosed, as a routine use, to a Federal, State, or local law enforcement agency, if the USPTO becomes aware of a violation or potential violation of law or regulation.

WHAT IS CLAIMED IS:

1. A composition of matter consisting essentially of, in weight percent, from about 6.8 to about 7.5% aluminum, from about 4 to about 8% tantalum, from about 4 to about 10% chromium, from about 2 to about 7% tungsten, from 0 to about 6% rhenium, from 0 to about 5% cobalt, from 0 to about 0.2% silicon, optionally, from about 0.15 to about 0.7% hafnium, from 0 to about 0.5% titanium, from 0 to about 4% molybdenum, from 0 to about 0.005% boron, from 0 to about 0.06% carbon, from 0 to about 0.03% of a rare earth addition selected from the group consisting of yttrium, lanthanum, cesium, and combinations thereof, balance nickel and incidental impurities.

2. The composition of matter according to claim 1, wherein the composition includes from about 6.8 to about 7.2 wt % aluminum.

3. The composition of matter according to claim 1, wherein the composition includes from about 4 to about 7.5 wt % chromium.

4. The composition of matter according to claim 1, wherein the composition includes, in weight percent, from about 6.8 to about 7.2% aluminum, from about 4.5 to about 6.4% tantalum, about 7.5% chromium, about 3.85% tungsten, from about 1.6 to about 3.0% rhenium, about 3.1 % cobalt, and about 0.05% silicon.

5. The composition of matter according to claim 1 wherein a total of tungsten, rhenium, and molybdenum is in a range of from about 6 to about 8 wt%.

6. The composition of matter according to claim 4 wherein a total of tungsten, rhenium, and molybdenum is in a range of from about 6 to about 8 wt %.

7. The composition of matter according to claim 1 having a density within a range of about 0.3 to about 0.315 lb/in^3, inclusive.

8. A composition of matter consisting essentially of, in weight percent, from about 6.8 to about 7.5% aluminum, from about 4 to about 8% tantalum, from about 4 to about 10% chromium, from about 2 to about 7% tungsten, up to about 6% rhenium, up to about 5% cobalt, up to about 0.2% silicon, from about 0.15 to about 0.7% hafnium, optionally, up to about 0.5% titanium, optionally, up to about 4% molybdenum, optionally, up to about 0.005% boron, optionally, up to about 0.06% carbon, optionally, up to about 0.03% of a rare earth addition selected from the group consisting of yttrium, lanthanum, cesium, and combinations thereof, balance nickel and incidental impurities.

9. The composition of matter according to claim 8 wherein a total of tungsten, rhenium, and molybdenum is in a range of from about 6 to about 8 wt%.

10. The composition of matter according to claim 8 wherein the composition includes from about 6 to about 7 wt% chromium.

11. An article comprising a substantially single crystal having a composition consisting essentially of, in weight percent, from about 6.8 to about 7.5% aluminum, from about 4 to about 8% tantalum, from about 4 to about 10% chromium, from about 2 to about 7% tungsten, from 0 to about 6% rhenium, from 0 to about 5% cobalt, from 0 to about 0.2% silicon, optionally, from about 0.15 to about 0.7% hafnium, from 0 to about 0.5% titanium, from 0 to about 4% molybdenum, from 0 to about 0.005% boron, from 0 to about 0.06% carbon, from 0 to about 0.03% of a rare earth addition selected from the group consisting of yttrium, lanthanum, cesium, and combinations thereof, balance nickel and incidental impurities.

12. The article according to claim 11 comprising a single-crystal component.

13. The article according to claim 12 wherein the single-crystal component comprises a blade of a gas turbine.

14. The article according to claim 11 comprising a component of a gas turbine engine selected from a nozzle, a shroud, a splash plate, and a combustor component.

15. The article according to claim 11 comprising a directionally solidified component.

16. The article according to claim 15 wherein the directionally solidified component comprises a blade of a gas turbine.

17. The article according to claim 11 comprising from about 6 to about 7 wt% chromium.

UNITED STATES PATENT AND TRADEMARK OFFICE

UNITED STATES DEPARTMENT OF COMMERCE
United States Patent and Trademark Office
Address: COMMISSIONER FOR PATENTS
P.O. Box 1450
Alexandria, Virginia 22313-1450
www.uspto.gov

APPLICATION NO.	FILING DATE	FIRST NAMED INVENTOR	ATTORNEY DOCKET NO.	CONFIRMATION NO.
12/409,929	03/24/2009	Kevin Swayne O'Hara	232798-1	2282

6111 7590 10/26/2010

GENERAL ELECTRIC COMPANY
GE AVIATION
ONE NEUMANN WAY MD F16
CINCINNATI, OH 45215

EXAMINER	
ART UNIT	PAPER NUMBER

NOTIFICATION DATE	DELIVERY MODE
10/26/2010	ELECTRONIC

Please find below and/or attached an Office communication concerning this application or proceeding.

The time period for reply, if any, is set in the attached communication.

Notice of the Office communication was sent electronically on above-indicated "Notification Date" to the following e-mail address(es):

Aviation.GPODocketing@ge.com
scott.andes@ge.com
kim.howard@ge.com

UNITED STATES PATENT AND TRADEMARK OFFICE

Commissioner for Patents
United States Patent and Trademark Office
P.O. Box 1450
Alexandria, VA 22313-1450
www.uspto.gov

BC

October 25, 2010

In re application of Kevin S. O'Hara et al. Serial No. 12/409,929 Filed: March 24, 2009 For: SUPER OXIDATION AND CYCLIC DAMAGE RESISTANT NICKEL-BASE SUPERALLOY AND ARTICLES FORMED THEREOF	: : : : : : : :	DECISION ON REQUEST TO PARTICIPATE IN PATENT PROSECUTION HIGHWAY PROGRAM AND PETITION TO MAKE SPECIAL UNDER 37 CFR 1.102(a)

This is a decision on the request to participate in the PCT Patent Prosecution Highway (PCT-PPH) pilot program and the petition under 37 CFR 1.102(a), filed September 13, 2010, to make the above-identified application special.

The request and petition are **DISMISSED**.

A grantable request to participate in the PCT-PPH pilot program and petition to make special require:

(1) The U.S. application must disclose an eligible relationship to one or more PCT applications where the ISA or IPEA are the JPO, EPO, or USPTO;

(2) At least one claim in the PCT application has novelty, inventive step, and industrial applicability and must be free of any observations in Box VIII in the latest work product in the international stage or applicant must identify and explain why the claim(s) is/are not subject to the observation in Box VIII;

(3) Applicant must submit a copy of the claim(s) from the PCT application(s) that have novelty, inventive step, and industrial applicability along with an English translation thereof and a statement that the English translation is accurate, if the claims are not in the English language;

(4) All the claims in the U.S. application must sufficiently correspond or be amended to sufficiently correspond to the claim(s) that have novelty, inventive step, and industrial applicability in the PCT application(s);

(5) Examination of the U.S. application has not begun;

(6) Applicant must submit a copy of the latest international work product from the PCT application indicating that the claim(s) have novelty, inventive step, and industrial

applicability along with an English translation thereof if the latest international work product is not in the English language; and

(7) Applicant must submit an IDS listing the documents cited by the PCT examiner in the international work product along with copies of documents except U.S. patents or U.S. patent application publications.

Conditions (1) and (3-7) above are considered to have been met. However, the request to participate in the PPH pilot program and petition fails meet condition (2). Regarding the requirement of condition (2), the ISA/237 in PCT/US2010/028202 contained observations in Box VIII and the Petitioner has failed to explain why the claims are not subject to these observations. As set forth in the USPTO/PCT PPH agreement, any observation described in Box VIII of the WO/ISA, which forms the basis for the PCT-PPH request, applicant must identify and explain why the claims are not subject to any observation described in Box VIII. The US application will not be eligible to participate in the PCT-PPH pilot program if applicant does not identify and explain why the claims are not subject to the observation described in Box VIII.

Applicant is given **ONE** opportunity within a time period of **ONE MONTH or THIRTY DAYS**, whichever is longer, from the mailing date of this decision to correct the deficiencies. **NO EXTENSION OF TIME UNDER 37 CFR 1.136 IS PERMITTED.** If the deficiencies are not corrected with the time period given, the application will await action in its regular turn.

Response must be filed via the Electronic Filing System (EFS). Any preliminary amendments and IDS submitted with the PPH documents must be separately indexed as a preliminary amendment and IDS, respectively.

Any inquiry regarding this decision should be directed to Blaine Copenheaver, Quality Assurance Specialist, at (571) 272-1156.

All other inquiries concerning the examination or status of the application is accessible in the PAIR system at http://www.uspto.gov/ebc/index.html.

/Blaine Copenheaver/

Blaine Copenheaver
Quality Assurance Specialist
Technology Center 1700

IN THE UNITED STATES PATENT AND TRADEMARK OFFICE

Inventor(s):	O'Hara, et. al.	Examiner:	Not Yet Available
Appl. No.:	12/409,929	Art Unit:	1735
Filed:	March 24, 2009	Confirmation No.:	2282
Title:	SUPER OXIDATION AND CYCLIC DAMAGE RESISTANT NICKEL-BASE SUPERALLOY AND ARTICLES FORMED THEREFROM	Atty Docket No.:	232798-1

VIA EFS
Commissioner for Patents
P.O. Box 1450
Alexandria, VA 22313-1450

REQUEST FOR RECONSIDERATION

Sir:

This is responsive to the Decision on Petition, dated as mailed October 25, 2010, in the above-referenced application.

Applicant respectfully requests reconsideration of Applicant's Petition to Participate in the PCT Patent Prosecution Highway pilot program and the Petition to Make Special under 37 CFR 1.102(a). Applicant respectfully submits that the present application meets all requirements for a grantable request to participate in the PCT-PPH pilot program and petition to make special.

Applicant's Petition has been dismissed for failing to explain why the claims are not subject to the observations contained in Box VIII of the ISA/237 in PCT/US2010/028202.

Observation 1 in Box VIII indicates that the relative terms "about" and "essentially" used in claims 1-11 and 17 have no well-recognized meaning and leaves the

reader in doubt as to the meaning of the technical features to which it refers, thereby rendering the definition of the subject-matter of said claims unclear. The ISA/237 suggests that the terms be deleted.

Applicant respectfully submits that observation 1 in Box VIII does not apply to the claims of the present invention because the term "about" does not render the claims indefinite. The fact that claim language, including terms of degree, may not be precise, does not automatically render the claim indefinite under 35 U.S.C. 112, second paragraph. *Seattle Box Co., v. Industrial Crating & Packing, Inc.*, 731 F.2d 818, 221 USPQ 568 (Fed. Cir. 1984). Acceptability of the claim language depends on whether one of ordinary skill in the art would understand what is claimed, in light of the specification. (MPEP 2173.05(b)). The term "about" has specifically been held to be definite. (see *W.L. Gore & Associates, Inc. v. Garlock, Inc.*, 721 F.2d 1540, 220 USPQ 303 (Fed. Cir. 1983)).

Applicant respectfully submits that observation 1 in Box VIII does not apply to the claims of the present invention because the term "essentially" does not render the claims indefinite. The term "essentially" as used in the claims of the present application appears within the commonly used and well-defined transitional phrase "consisting essentially of". The transitional phrases "comprising", "consisting essentially of" and "consisting of" define the scope of a claim with respect to what unrecited additional components or steps, if any, are excluded from the scope of the claim. (MPEP 2111.03).

Observation 2 in Box VIII indicates that the unit of density employed in Claim 7 is not additionally expressed in terms of the units stipulated by Rule 10.1(a) PCT. Rule 10.1(a) PCT requires that units of weights and measures shall be expressed in terms of

the metric system, or also expressed in such terms if first expressed in terms of a different system.

Applicant respectfully submits that observation 2 in Box VIII does not apply to the claims of the present invention because there is no requirement to express units in terms of the metric system in the claims of a United States patent application.

Please charge any fees that are incurred in connection with this request to deposit account no. 09-0470. The undersigned attorney may be contacted at the number below to facilitate the resolution of any matters.

Respectfully submitted,

By: /mac39148/
Mark A. Conklin
Reg. No. 39148
Attorney for Applicant

General Electric Company
Global Patent Operation
2 Corporate Drive, Suite 648
Shelton, CT 06484
Phone: (203)-944-6717
Fax: (203)-944-6712

UNITED STATES PATENT AND TRADEMARK OFFICE

UNITED STATES DEPARTMENT OF COMMERCE
United States Patent and Trademark Office
Address: COMMISSIONER FOR PATENTS
P.O. Box 1450
Alexandria, Virginia 22313-1450
www.uspto.gov

APPLICATION NO.	FILING DATE	FIRST NAMED INVENTOR	ATTORNEY DOCKET NO.	CONFIRMATION NO.
12/409,929	03/24/2009	Kevin Swayne O'Hara	232798-1	2282

6111 7590 01/21/2011

GENERAL ELECTRIC COMPANY
Global Patent Operation-Aviation
2 Corporate Drive
STE 648
Shelton, CT 06484

EXAMINER	
ROE, JESSEE RANDALL	

ART UNIT	PAPER NUMBER
1733	

NOTIFICATION DATE	DELIVERY MODE
01/21/2011	ELECTRONIC

Please find below and/or attached an Office communication concerning this application or proceeding.

The time period for reply, if any, is set in the attached communication.

Notice of the Office communication was sent electronically on above-indicated "Notification Date" to the following e-mail address(es):

Aviation.GPODocketing@ge.com
gpo.mail@ge.com

UNITED STATES PATENT AND TRADEMARK OFFICE

Commissioner for Patents
United States Patent and Trademark Office
P.O. Box 1450
Alexandria, VA 22313-1450
www.uspto.gov

BC

January 20, 2011

In re application of Kevin S. O'Hara et al. Serial No. 12/409,929 Filed: March 24, 2009 For: SUPER OXIDATION AND CYCLIC DAMAGE RESISTANT NICKEL-BASE SUPERALLOY AND ARTICLES FORMED THEREOF	: : : : : : :	DECISION ON REQUEST TO PARTICIPATE IN PATENT PROSECUTION HIGHWAY PROGRAM AND PETITION TO MAKE SPECIAL UNDER 37 CFR 1.102(a)

This is a decision on the request for reconsideration to participate in the PCT Patent Prosecution Highway (PCT-PPH) pilot program and the petition under 37 CFR 1.102(a), filed November 24, 2010, to make the above-identified application special.

The request and petition are **GRANTED**.

A grantable request to participate in the PCT-PPH pilot program and petition to make special require:

(1) The U.S. application must disclose an eligible relationship to one or more PCT applications where the ISA or IPEA are the JPO, EPO, or USPTO;

(2) At least one claim in the PCT application has novelty, inventive step, and industrial applicability and must be free of any observations in Box VIII in the latest work product in the international stage or applicant must identify and explain why the claim(s) is/are not subject to the observation in Box VIII;

(3) Applicant must submit a copy of the claim(s) from the PCT application(s) that have novelty, inventive step, and industrial applicability along with an English translation thereof and a statement that the English translation is accurate, if the claims are not in the English language;

(4) All the claims in the U.S. application must sufficiently correspond or be amended to sufficiently correspond to the claim(s) that have novelty, inventive step, and industrial applicability in the PCT application(s);

(5) Examination of the U.S. application has not begun;

(6) Applicant must submit a copy of the latest international work product from the PCT application indicating that the claim(s) have novelty, inventive step, and industrial

applicability along with an English translation thereof if the latest international work product is not in the English language; and

(7) Applicant must submit an IDS listing the documents cited by the PCT examiner in the international work product along with copies of documents except U.S. patents or U.S. patent application publications.

The request to participate in the PPH program and petition comply with the above requirements. Accordingly, the above-identified application has been accorded "special" status.

The application is being forwarded to the examiner for action on the merits commensurate with this decision.

Any inquiry regarding this decision should be directed to Blaine Copenheaver, Quality Assurance Specialist, at (571) 272-1156.

All other inquiries concerning the examination or status of the application is accessible in the PAIR system at http://www.uspto.gov/ebc/index.html.

/Blaine Copenheaver/

Blaine Copenheaver
Quality Assurance Specialist
Technology Center 1700

UNITED STATES PATENT AND TRADEMARK OFFICE

Commissioner for Patents
United States Patent and Trademark Office
P.O. Box 1450
Alexandria, VA 22313-1450
www.uspto.gov

GENERAL ELECTRIC COMPANY
GE AVIATION
ONE NEUMANN WAY MD F16
CINCINNATI OH 45215

MAILED

NOV 22 2010

OFFICE OF PETITIONS

In re Application of :
Peretti, et al. : DECISION ON PETITION
Application No. 12/409,950 :
Filed: March 24, 2009 :
Atty. Dkt. No.: 234087-3 :

This is a decision on the petition under 37 CFR 1.137(b), filed September 14, 2010.

The petition is **GRANTED**.

This application became abandoned March 1, 2010 for failure to timely reply to the Notice to File Missing Parts of Nonprovisional Application (Notice) mailed December 30, 2009. The Notice set a two month statutory period of time for reply. Notice of Abandonment was mailed September 8, 2010.

A grantable petition under 37 CFR 1.137(b) must be accompanied by: (1) the required reply, unless previously filed; (2) the petition fee as set forth in 37 CFR 1.17(m); (3) a statement that the entire delay in filing the required reply from the due date for the reply until the filing of a grantable petition pursuant to 37 CFR 1.137(b) was unintentional; and (4) any terminal disclaimer (and fee as set forth in 37 CFR 1.20(d)) required by 37 CFR 1.137(d). Where there is a question as to whether either the abandonment or the delay in filing a petition under 37 CFR 1.137 was unintentional, the Director may require additional information. See MPEP 711.03(c)(II)(C) and (D).

The instant petition has been carefully reviewed and found in compliance with the requirements set forth above.

In view thereof, this application is being forwarded to the Office of Patent Application Processing for further processing.

Telephone inquiries concerning this matter may be directed to the undersigned at (571) 272-3205.

/ALESIA M. BROWN/

Alesia M. Brown
Petitions Attorney
Office of Petitions

UNITED STATES PATENT AND TRADEMARK OFFICE

Commissioner for Patents
United States Patent and Trademark Office
P.O. Box 1450
Alexandria, VA 22313-1450
www.uspto.gov

STEPOE & JOHNSON LLP
1330 CONNECTICUT AVE., NW
WASHINGTON, DC 20036

MAILED
MAY 04 2011
OFFICE OF PETITIONS

In re Application of :
Nobuhiro Katsuma et al :
Application No. 12/409,965 : ON PETITION
Filed: March 24, 2009 :
Attorney Docket No. 28951.5686

This is a decision on the petition, filed April 27, 2011 under 37 CFR 1.313(c)(2) to withdraw the above-identified application from issue after payment of the issue fee.

The petition is **GRANTED**.

The above-identified application is withdrawn from issue for consideration of a submission under 37 CFR 1.114 (request for continued examination). See 37 CFR 1.313(c)(2).

Petitioner is advised that the issue fee paid on April 7, 2011 in the above-identified application cannot be refunded. If, however, the above-identified application is again allowed, petitioner may request that it be applied towards the issue fee required by the new Notice of Allowance.[1]

Telephone inquiries should be directed to Irvin Dingle at (571) 272-3210.

This matter is being referred to Technology Center AU 2858 for processing of the request for continued examination under 37 CFR 1.114 and for consideration of the concurrently filed Information Disclosure Statement.

/Irvin Dingle/
Irvin Dingle
Petitions Examiner
Office of Petitions

[1] The request to apply the issue fee to the new Notice may be satisfied by completing and returning the new Issue Fee Transmittal Form PTOL-85(b), which includes the following language thereon: Commissioner for Patents is requested to apply the Issue Fee and Publication Fee (if any) or re-apply any previously paid issue fee to the application identified above. Petitioner is advised that, whether a fee is indicated as being due or not, the Issue Fee Transmittal Form **must** be completed and timely submitted to avoid abandonment. Note the language in bold text on the first page of the Notice of Allowance and Fee(s) Due (PTOL-85).

UNITED STATES PATENT AND TRADEMARK OFFICE

Commissioner for Patents
United States Patent and Trademark Office
P.O. Box 1450
Alexandria, VA 22313-1450
www.uspto.gov

ARCHER DANIELS MIDLAND COMPANY
4666 FARIES PARKWAY
DECATUR IL 62526

MAILED

FEB 06 2012

OFFICE OF PETITIONS

In re Application of :
Sanborn, et al. : DECISION ON PETITION
Application No. 12/410,016 :
Filed: March 24, 2009 :
Atty. Dkt. No.: CP.0114.US01 :

This decision is in response to the petition under 37 CFR 1.137(b), filed January 19, 2012.

The petition is **GRANTED**.

The application became abandoned August 6, 2011 for failure to timely submit a proper reply to the Office action mailed July 5, 2011. The Office action set a one month shortened statutory period of time for reply. Notice of Abandonment was mailed January 24, 2012.

A grantable petition pursuant to 37 C.F.R. § 1.137(b) must be accompanied by: (1) the required reply to the outstanding Office action or notice, unless previously filed; (2) the petition fee as set forth in 37 C.F.R. § 1.17(m); (3) a statement that the entire delay in filing the required reply from the due date for the reply until the filing of a grantable petition pursuant to 37 C.F.R. § 1.137(b) was unintentional; and (4) any terminal disclaimer (and fee set forth in 37 C.F.R. § 1.20(d)) required pursuant to 37 C.F.R. § 1.137(c).

The instant petition has been carefully reviewed and found in compliance with the requirements set forth above.

This application is being forwarded to Group Art Unit 1622 for further processing.

Telephone inquiries concerning this decision should be directed to the undersigned at (571) 272-3205.

/ALESIA M. BROWN/

Alesia M. Brown
Attorney Advisor
Office of Petitions

UNITED STATES PATENT AND TRADEMARK OFFICE

UNITED STATES DEPARTMENT OF COMMERCE
United States Patent and Trademark Office
Address: COMMISSIONER FOR PATENTS
P.O. Box 1450
Alexandria, Virginia 22313-1450
www.uspto.gov

APPLICATION NO.	FILING DATE	FIRST NAMED INVENTOR	ATTORNEY DOCKET NO.	CONFIRMATION NO.
12/410,036	03/24/2009	Bryan M. Waltersdorf	026281-9002-00	2469

23409 7590 02/10/2011

MICHAEL BEST & FRIEDRICH LLP
100 E WISCONSIN AVENUE
Suite 3300
MILWAUKEE, WI 53202

EXAMINER	
KIM, SHIN H	

ART UNIT	PAPER NUMBER
3611	

MAIL DATE	DELIVERY MODE
02/10/2011	PAPER

Please find below and/or attached an Office communication concerning this application or proceeding.

The time period for reply, if any, is set in the attached communication.

UNITED STATES PATENT AND TRADEMARK OFFICE

Commissioner for Patents
United States Patent and Trademark Office
P.O. Box 1450
Alexandria, VA 22313-1450
www.uspto.gov

FEB 10 2011

MICHAEL BEST & FRIEDRICH LLP
100 E WISCONSIN AVENUE
Suite 3300
MILWAUKEE WI 53202

In re Application of: Bryan WALTERSDORF	:	DECISION ON PETITION
Application No. : 12/410,036	:	FOR SUPERVISORY REVIEW
Filed: March 24, 2009	:	UNDER 37 CFR 1.181
For: WRISTBAND TAG	:	

This is in response to applicant's petition filed on January 27, 2011 to have the final Office action of November 19, 2010 withdrawn.

The petition is **DENIED.**

The applicant has requested a review of claims 1-19 as presented in applicant's response of August 31, 2010 and the final Office action of November 19, 2010. The applicant has presented arguments to the examiner's action and, indicated that the examiner has failed to provide a reference that teaches a combination of a through-cut portion and a kiss-cut portion in a 103 (a) rejection of claims 1-19. The issues raised by applicant are questions relate to the merits which go to the patentability of the claims. As such, these questions are matters appealable to the Board of Patent Appeals and Inferences, and not petitionable matters. MPEP § 1201 states that "Where the differences of opinion concern the denial of patent claims because of prior art or other patentability issues, the questions thereby raised are said to relate to the merits, and appeal procedure within the Office and to the courts has long been provided by statute (35 U.S.C. 134)."

Further, a review of the Office action dated November 19, 2010 finds that there is no evidence of any arbitrary or capricious actions on the part of the examiner assigned to examine the application.

Any questions or comments with respect to this decision should be directed to Quality Assurance Specialist Lanna Mai at (571) 272-6867.

David L. Talbott, Director
Technology Center 3600
571-272-5150

lm: 2/7/11
LM

Doc Code: PPH.PCT.652
Document Description: Petition to make special under PCT-Patent Pros Hwy

PTO/SB/20PCT-KR (06-10)
Approved for use through 01/31/2012. OMB 0651-0058
U.S. Patent and Trademark Office; U. S. DEPARTMENT OF COMMERCE
Under the Paperwork Reduction Act of 1995, no persons are required to respond to a collection of information unless it displays a valid OMB control number.

REQUEST FOR PARTICIPATION IN THE PATENT COOPERATION TREATY - PATENT PROSECUTION HIGHWAY (PCT-PPH) PILOT PROGRAM BETWEEN THE KOREAN INTELLECTUAL PROPERTY OFFICE (KIPO) AND THE USPTO

Application No:	12410042	Filing date:	March 24, 2009
First Named Inventor:	Kristian SOLHAUG		
Title of the Invention:	WELL TOOLS UTILIZING SWELLABLE MATERIALS ACTIVATED ON DEMAND		

THIS REQUEST FOR PARTICIPATION IN THE PCT-PPH PILOT PROGRAM ALONG WITH THE REQUIRED DOCUMENTS MUST BE SUBMITTED VIA EFS-WEB. INFORMATION REGARDING EFS-WEB IS AVAILABLE AT HTTP://WWW.USPTO.GOV/EBC/EFS_HELP.HTML

APPLICANT HEREBY REQUESTS PARTICIPATION IN THE PCT-PPH PROGRAM AND PETITIONS TO MAKE THE ABOVE-IDENTIFIED APPLICATION SPECIAL UNDER THE PCT-PPH PROGRAM.

The above-identified application is (1) a national stage entry of the corresponding PCT application, or (2) a national stage entry of another PCT application which claims priority to the corresponding PCT application, or (3) a national application that claims domestic/ foreign priority to the corresponding PCT application, or (4) a national application which forms the basis for the priority claim in the corresponding PCT application, or (5) a continuing application of a U.S. application that satisfies one of (1) to (4) above, or (6) a U.S. application that claims domestic benefit to a U.S. provisional application which forms the basis for the priority claim in the corresponding PCT application.

The corresponding PCT application number(s) is/are: PCT/US10/27561

The international date of the corresponding PCT application(s) is/are: 17 March 2010

I. List of Required Documents:

a. **A copy of the latest international work product (WO/ISA, WO/IPEA, or IPER) in the above–identified corresponding PCT application(s)**

☒ Is attached.

☐ Is not attached because the document is already in the U.S. application.

b. **A copy of all claims which were indicated as having novelty, inventive step and industrial applicability in the above-identified corresponding PCT application(s).**

☒ Is attached.

☐ Is not attached because the document is already in the U.S. application.

c. **English translations of the documents in a. and b. above are attached (if the documents are not in the English language). A statement that the English translation is accurate is attached for the document in b. above.**

This collection of information is required by 35 U.S.C. 119, 37 CFR 1.55, and 37 CFR 1.102(d). The information is required to obtain or retain a benefit by the public, which is to file (and by the USPTO to process) an application. Confidentiality is governed by 35 U.S.C. 122 and 37 CFR 1.11 and 1.14. This collection is estimated to take 2 hours to complete, including gathering, preparing, and submitting the completed application form to the USPTO. Time will vary depending upon the individual case. Any comments on the amount of time you require to complete this form and/or suggestions for reducing this burden should be sent to the Chief Information Officer, U.S. Patent and Trademark Office, U.S. Department of Commerce, P.O. Box 1450, Alexandria, VA 22313-1450. DO NOT SEND FEES OR COMPLETED FORMS TO THIS ADDRESS.

PTO/SB/20PCT-KR (06-10)
Approved for use through 01/31/2012. OMB 0651-0058
U.S.Patent and Trademark Office; U.S. DEPARTMENT OF COMMERCE
Under the Paperwork Reduction Act of 1995, no persons are required to respond to a collection of information unless it displays a valid OMB control number.

REQUEST FOR PARTICIPATION IN THE PCT-PPH PILOT PROGRAM BETWEEN THE KIPO AND THE USPTO

(continued)

Application No.:	12/410,042
First Named Inventor:	Kristian SOLAUG

d. **(1) An information disclosure statement listing the documents cited in the international work products (ISR, WO/ISA, WO/IPEA, IPER) of the corresponding PCT application.**

☐ Is attached

☒ Has already been filed in the above-identified U.S. application on November 3, 2010

(2) Copies of all documents (except) for U.S. patents or U.S. patent application publications)

☒ Are attached.

Have already been filed in the above-identified U.S. application on _____

II. Claims Correspondence Table:

Claims in US Application	Patentable Claims in the corresponding PCT Application	Explanation regarding the correspondence
11	11	IDENTICAL
12	12	IDENTICAL
13	13	IDENTICAL
14	14	IDENTICAL
15	15	IDENTICAL
16	16	IDENTICAL
19	19	IDENTICAL - written in independent form

III. All the claims in the US application sufficiently correspond to the patentable claims in the corresponding PCT application.

Signature /Marlin R. Smith/	Date January 31, 2011
Name (Print/Typed) Marlin R. Smith	Registration Number 38310

Privacy Act Statement

The **Privacy Act of 1974 (P.L. 93-579)** requires that you be given certain information in connection with your submission of the attached form related to a patent application or patent. Accordingly, pursuant to the requirements of the Act, please be advised that: (1) the general authority for the collection of this information is 35 U.S.C. 2(b)(2); (2) furnishing of the information solicited is voluntary; and (3) the principal purpose for which the information is used by the U.S. Patent and Trademark Office is to process and/or examine your submission related to a patent application or patent. If you do not furnish the requested information, the U.S. Patent and Trademark Office may not be able to process and/or examine your submission, which may result in termination of proceedings or abandonment of the application or expiration of the patent.

The information provided by you in this form will be subject to the following routine uses:

1. The information on this form will be treated confidentially to the extent allowed under the Freedom of Information Act (5 U.S.C. 552) and the Privacy Act (5 U.S.C 552a). Records from this system of records may be disclosed to the Department of Justice to determine whether disclosure of these records is required by the Freedom of Information Act.
2. A record from this system of records may be disclosed, as a routine use, in the course of presenting evidence to a court, magistrate, or administrative tribunal, including disclosures to opposing counsel in the course of settlement negotiations.
3. A record in this system of records may be disclosed, as a routine use, to a Member of Congress submitting a request involving an individual, to whom the record pertains, when the individual has requested assistance from the Member with respect to the subject matter of the record.
4. A record in this system of records may be disclosed, as a routine use, to a contractor of the Agency having need for the information in order to perform a contract. Recipients of information shall be required to comply with the requirements of the Privacy Act of 1974, as amended, pursuant to 5 U.S.C. 552a(m).
5. A record related to an International Application filed under the Patent Cooperation Treaty in this system of records may be disclosed, as a routine use, to the International Bureau of the World Intellectual Property Organization, pursuant to the Patent Cooperation Treaty.
6. A record in this system of records may be disclosed, as a routine use, to another federal agency for purposes of National Security review (35 U.S.C. 181) and for review pursuant to the Atomic Energy Act (42 U.S.C. 218(c)).
7. A record from this system of records may be disclosed, as a routine use, to the Administrator, General Services, or his/her designee, during an inspection of records conducted by GSA as part of that agency's responsibility to recommend improvements in records management practices and programs, under authority of 44 U.S.C. 2904 and 2906. Such disclosure shall be made in accordance with the GSA regulations governing inspection of records for this purpose, and any other relevant (*i.e.*, GSA or Commerce) directive. Such disclosure shall not be used to make determinations about individuals.
8. A record from this system of records may be disclosed, as a routine use, to the public after either publication of the application pursuant to 35 U.S.C. 122(b) or issuance of a patent pursuant to 35 U.S.C. 151. Further, a record may be disclosed, subject to the limitations of 37 CFR 1.14, as a routine use, to the public if the record was filed in an application which became abandoned or in which the proceedings were terminated and which application is referenced by either a published application, an application open to public inspection or an issued patent.
9. A record from this system of records may be disclosed, as a routine use, to a Federal, State, or local law enforcement agency, if the USPTO becomes aware of a violation or potential violation of law or regulation.

UNITED STATES PATENT AND TRADEMARK OFFICE

UNITED STATES DEPARTMENT OF COMMERCE
United States Patent and Trademark Office
Address: COMMISSIONER FOR PATENTS
P.O. Box 1450
Alexandria, Virginia 22313-1450
www.uspto.gov

APPLICATION NO.	FILING DATE	FIRST NAMED INVENTOR	ATTORNEY DOCKET NO.	CONFIRMATION NO.
12/410,042	03/24/2009	Kristian Solhaug	2008-IP-016837 U1 US	2477

49431 7590 03/09/2011

SMITH IP SERVICES, P.C.
P.O. Box 997
Rockwall, TX 75087

EXAMINER	
NEUDER, WILLIAM P	

ART UNIT	PAPER NUMBER
3672	

NOTIFICATION DATE	DELIVERY MODE
03/09/2011	ELECTRONIC

Please find below and/or attached an Office communication concerning this application or proceeding.

The time period for reply, if any, is set in the attached communication.

Notice of the Office communication was sent electronically on above-indicated "Notification Date" to the following e-mail address(es):

sally@smithipservices.com
mail@smithipservices.com
scrawford@smithipservices.com

UNITED STATES PATENT AND TRADEMARK OFFICE

Commissioner for Patents
United States Patent and Trademark Office
P.O. Box 1450
Alexandria, VA 22313-1450
www.uspto.gov

MAR - 9 2011

SMITH IP SERVICES, P.C.
P.O. Box 997
Rockwall TX 75087

In re application of Solhaug et al. Application No. 12/410,042 Filed: March 24, 2009 For: WELL TOOLS UTILIZING SWELLABLE MATERIALS ACTIVATED ON DEMAND	:	**DECISION ON REQUEST TO PARTICIPATE IN PATENT PROSECUTION HIGHWAY PROGRAM AND PETITION TO MAKE SPECIAL UNDER 37 CFR 1.102(a)**

This is a decision on the request to participate in the Patent Prosecution Highway (PPH) program and the petition under 37 CFR 1.102(a), filed January 31, 2011, to make the above-identified application special.

The request and petition are **GRANTED**.

A grantable request to participate in the PPH program and petition to make special require:

(1) The U.S. application must disclose an eligible relationship to one or more PCT applications filed in the KIPO, EPO or USPTO;
(2) Applicant must submit a copy of the allowable/patentable claim(s) from the PCT application(s) latest international work product (the written opinion or the IPER) along with an English translation thereof and a statement that the English translation is accurate;
(3) All the claims in the U.S. application must sufficiently correspond or be amended to sufficiently correspond to the allowable/patentable claim(s) in the PCT application(s);
(4) Examination of the U.S. application has not begun;
(5) Applicant must submit a copy of the latest international work product from the PCT application containing the allowable/patentable claim(s) along with an English translation thereof and a statement that the English translation is accurate;
(6) Applicant must submit an IDS listing the documents cited by the PCT examiner in the international work product along with copies of documents except U.S. patents or U.S. patent application publications.

In light of the petition being properly submitted via EFS-Web as is required, and the preliminary amendment of January 31, 2011, the request to participate in the PPH program complies with the above requirements, the above-identified application has been accorded "special" status.

All other inquiries concerning the examination or status of the application should be directed to the Patent Application Information Retrieval (PAIR) system.

The application is being forwarded to the examiner for action on the merits commensurate with this decision as soon as any pre-exam processing has been completed.

Any inquiry regarding this decision should be directed to Mikado Buiz, Quality Assurance Specialist, at (571) 272-6578.

/ Mikado Buiz /

Mikado Buiz,
Quality Assurance Specialist
Technology Center 3600

MB/MB: 03/08/11

UNITED STATES PATENT AND TRADEMARK OFFICE

Commissioner for Patents
United States Patent and Trademark Office
P.O. Box 1450
Alexandria, VA 22313-1450
www.uspto.gov

HOWARD & HOWARD ATTORNEYS PLLC
450 West Fourth Street
Royal Oak MI 48067

MAILED

NOV 0 8 2010

OFFICE OF PETITIONS

In re Application of :
Sergey Gurin et al. :
Application No. 12/410,129 :
Filed: March 24, 2009 :
Attorney Docket No. **071078.00003** :

DECISION ON PETITION
TO WITHDRAW
FROM RECORD

This is a decision on the request to withdraw as attorney of record under 37 CFR § 1.36(b), filed October 12, 2010.

The request is **APPROVED**.

A grantable request to withdraw as attorney/agent of record must be signed by every attorney/agent seeking to withdraw or contain a clear indication that one attorney is signing on behalf of another/others. The Office requires the practitioner(s) requesting withdrawal to certify that he, she, or they have: (1) given reasonable notice to the client, prior to the expiration of the response period, that the practitioner(s) intends to withdraw from employment; (2) delivered to the client or a duly authorized representative of the client all papers and property (including funds) to which the client is entitled; and (3) notified the client of any responses that may be due and the time frame within which the client must respond , pursuant to 37 CFR 10.40.

The request was signed by Matthew Binkowiski on behalf of all attorneys of record who are associated with Customer Number 27305.

All attorneys/agents associated with Customer Number 27305 have been withdrawn.

Applicant is reminded that there is no attorney of record at this time.

The correspondence address of record has been changed and all future correspondence will be directed to the first named inventor Sergey Gurin at the address indicated below.

There is no outstanding Office action that requires a reply from the applicant.

Telephone inquiries concerning this decision should be directed to the undersigned at 571-272-4584.

/JoAnne Burke/
JoAnne Burke
Petitions Examiner
Office of Petitions

cc: Sergey Gurin
150 SE 2nd Avenue
Suite 1010
Miami, FL 33139

UNITED STATES PATENT AND TRADEMARK OFFICE

Commissioner for Patents
United States Patent and Trademark Office
P.O. Box 1450
Alexandria, VA 22313-1450
www.uspto.gov

THE ESTEE LAUDER COS, INC
155 PINELAWN ROAD
STE 345 S
MELVILLE NY 11747

MAILED

MAR 10 2011

OFFICE OF PETITIONS

In re Application of :
Maes et al. :
Application No. 12/410,130 : DECISION ON PETITION
Filed: March 24, 2009 : UNDER 37 CFR 1.78(a)(3)
Attorney Docket No. 00.22C1 :

This is a decision on the petition under 37 CFR 1.78(a)(3), filed January 20, 2011, to accept an unintentionally delayed claim under 35 U.S.C. § 120 for the benefit of priority to a prior-filed nonprovisional application set forth in the amendment previously filed July 21, 2010.

The petition is **DISMISSED**.

A petition for acceptance of a claim for late priority under 37 CFR 1.78(a)(3) is only applicable to those applications filed on or after November 29, 2000. Further, the petition is appropriate only after the expiration of the period specified in 37 CFR 1.78(a)(2)(ii). In addition, the petition under 37 CFR 1.78(a)(3) must be accompanied by:

(1) the reference required by 35 U.S.C. § 120 and 37 CFR 1.78(a)(2)(i) of the prior-filed application(s), unless previously submitted;
(2) the surcharge set forth in § 1.17(t); and
(3) a statement that the entire delay between the date the claim was due under 37 CFR 1.78(a)(2)(ii) and the date the claim was filed was unintentional. The Commissioner may require additional information where there is a question whether the delay was unintentional.

The instant petition does not comply with item (1) above.

With regards to item (1), when a later-filed application is claiming the benefit of a prior-filed nonprovisional application under 35 U.S.C. 120, 121, or 365(c), the later-filed application must be copending with the prior application or with an intermediate nonprovisional application similarly entitled to the benefit of the filing date of the prior application. Copendency is defined in the clause which requires that the later-filed application must be filed before: (A) the patenting of the prior application; (B) the

abandonment of the prior application; or (C) the termination of proceedings in the prior application.

Petitioner has requested benefit of Application No. 09/773,351, filed on January 31, 2001 and abandoned on February 9, 2009. Since the instant application was filed on March 24, 2009, no copendency exists between these two applications. Copendency between the instant application and the prior application is required. Since the applications are not copending, the benefit claim to the prior-filed nonprovisional is improper. Applicant is required to delete the reference to the prior-filed application from the first sentence(s) of the specification, unless applicant can establish copendency between the applications.

Accordingly, before the petition under 37 CFR 1.78(a)(3) can be granted, a substitute amendment correcting the above matters, along with a renewed petition under 37 CFR 1.78(a)(3), is required. No further petition fee is necessary.

Further, it is not apparent whether the person signing the instant petition was ever given a power of attorney or authorization of agent to prosecute this patent application. In accordance with 37 CFR 1.34(a), the signature appearing on the petition shall constitute a representation to the United States Patent and Trademark Office that he/she is authorized to represent the particular party in whose behalf he/she acts.

Further correspondence with respect to this matter should be addressed as follows:

By mail: Mail Stop PETITIONS
Commissioner for Patents
Post Office Box 1450
Alexandria, VA 22313-1450

By hand: Customer Window located at:
U.S. Patent and Trademark Office
Customer Service Window Randolph Building
401 Dulany Street
Alexandria, VA 22314

By fax: (571) 273-8300
ATTN: Office of Petitions

Any questions concerning this matter may be directed to Joan Olszewski at (571) 272-7751.

/Liana Walsh/
Liana Walsh
Petitions Examiner
Office of Petitions

UNITED STATES PATENT AND TRADEMARK OFFICE

Commissioner for Patents
United States Patent and Trademark Office
P.O. Box 1450
Alexandria, VA 22313-1450
www.uspto.gov

THE ESTEE LAUDER COS, INC
155 PINELAWN ROAD
STE 345 S
MELVILLE NY 11747

MAILED
APR 25 2011
OFFICE OF PETITIONS

In re Application of
Maes et al.
Application No. 12/410,130
Filed: March 24, 2009
Attorney Docket No. 00.22C1

: DECISION GRANTING PETITION
: UNDER 37 CFR 1.78(a)(3)

This is a decision on the renewed petition under 37 CFR 1.78(a)(3), filed April 4, 2011, to accept an unintentionally delayed claim under 35 U.S.C. § 120 for the benefit of priority to the prior-filed nonprovisional application as set forth in the amendment previously filed July 21, 2010.

The petition is **GRANTED**.

A petition for acceptance of a claim for late priority under 37 CFR 1.78(a)(3) is only applicable to those applications filed on or after November 29, 2000. Further, the petition is appropriate only after the expiration of the period specified in 37 CFR 1.78(a)(2)(ii). In addition, the petition under 37 CFR 1.78(a)(3) must be accompanied by:

(1) the reference required by 35 U.S.C. § 120 and 37 CFR 1.78(a)(2)(i) of the prior-filed application, unless previously submitted;
(2) the surcharge set forth in § 1.17(t); and
(3) a statement that the entire delay between the date the claim was due under 37 CFR 1.78(a)(2)(ii) and the date the claim was filed was unintentional. The Commissioner may require additional information where there is a question whether the delay was unintentional.

The instant nonprovisional application was filed after November 29, 2000, and the claim herein for the benefit of priority to the prior-filed nonprovisional application is submitted after expiration of the period specified by 37 CFR 1.78(a)(2)(ii). Therefore, this is a proper petition under 37 CFR 1.78(a)(3).

The petition complies with the requirements for a grantable petition under 37 CFR 1.78(a)(3) in that (1) a reference to the prior-filed nonprovisional application has been included in an amendment to the first sentence of the specification following the title, as provided by 37 CFR 1.78(a)(2)(iii); (2) the surcharge fee required by 37 CFR 1.17(t) has been submitted; and (3) the petition contains a proper statement of unintentional delay. Accordingly, having found that the instant petition for acceptance of an unintentionally delayed claim for the benefit of priority under 35 U.S.C. § 120 to the prior-filed nonprovisional application satisfies the conditions of 37 CFR 1.78(a)(3), the petition is granted.

The granting of the petition to accept the delayed benefit claim to the prior-filed application under 37 CFR 1.78(a)(3) should not be construed as meaning that the instant application is entitled to the benefit of the prior-filed application. In order for the instant application to be entitled to the benefit of the prior-filed application, all other requirements under 35 U.S.C. § 120 and 37 CFR 1.78(a)(1) and (a)(2) must be met. Similarly, the fact that the corrected Filing Receipt accompanying this decision on petition includes the prior-filed application should not be construed as meaning that applicant is entitled to the claim for benefit of priority to the prior-filed application noted thereon. Accordingly, the examiner will, in due course, consider this benefit claim and determine whether the instant application is entitled to the benefit of the earlier filing date.

A corrected Filing Receipt, which includes the priority claim to the prior-filed nonprovisional application, accompanies this decision on petition.

Any inquiries concerning this decision may be directed to Joan Olszewski at (571) 272-7751.

This matter is being referred to Technology Center Art Unit 1655 for appropriate action on the amendment filed July 21, 2010, including consideration by the examiner of applicant's entitlement to claim benefit of priority under 35 U.S.C. § 120 to the prior-filed nonprovisional application.

/Liana Walsh/
Liana Walsh
Petitions Examiner
Office of Petitions

ATTACHMENT: Corrected Filing Receipt

UNITED STATES PATENT AND TRADEMARK OFFICE

UNITED STATES DEPARTMENT OF COMMERCE
United States Patent and Trademark Office
Address: COMMISSIONER FOR PATENTS
P.O. Box 1450
Alexandria, Virginia 22313-1450
www.uspto.gov

APPLICATION NUMBER	FILING or 371(c) DATE	GRP ART UNIT	FIL FEE REC'D	ATTY.DOCKET.NO	TOT CLAIMS	IND CLAIMS
12/410,130	03/24/2009	1655	1310	00.22C1	19	4

CONFIRMATION NO. 2635

CORRECTED FILING RECEIPT

23487
THE ESTEE LAUDER COS, INC
155 PINELAWN ROAD
STE 345 S
MELVILLE, NY 11747

OC000000047309049

Date Mailed: 04/21/2011

Receipt is acknowledged of this non-provisional patent application. The application will be taken up for examination in due course. Applicant will be notified as to the results of the examination. Any correspondence concerning the application must include the following identification information: the U.S. APPLICATION NUMBER, FILING DATE, NAME OF APPLICANT, and TITLE OF INVENTION. Fees transmitted by check or draft are subject to collection. Please verify the accuracy of the data presented on this receipt. **If an error is noted on this Filing Receipt, please submit a written request for a Filing Receipt Correction. Please provide a copy of this Filing Receipt with the changes noted thereon. If you received a "Notice to File Missing Parts" for this application, please submit any corrections to this Filing Receipt with your reply to the Notice. When the USPTO processes the reply to the Notice, the USPTO will generate another Filing Receipt incorporating the requested corrections**

Applicant(s)

Daniel H. Maes, Huntington, NY;
Jules Zecchino, Closter, NJ;

Power of Attorney:
Karen Lowney--31274
Dorene Price--43018

Domestic Priority data as claimed by applicant

This application is a CON of 09/773,351 01/31/2001 ABN

Foreign Applications (You may be eligible to benefit from the **Patent Prosecution Highway** program at the USPTO. Please see http://www.uspto.gov for more information.)

If Required, Foreign Filing License Granted: 04/01/2009

The country code and number of your priority application, to be used for filing abroad under the Paris Convention, is **US 12/410,130**

Projected Publication Date: Not Applicable

Non-Publication Request: No

Early Publication Request: No

Title

Cholesterol Sulfate And Amino Sugar Compositions For Enhancement Of Stratum Corneum Function

Preliminary Class

424

PROTECTING YOUR INVENTION OUTSIDE THE UNITED STATES

Since the rights granted by a U.S. patent extend only throughout the territory of the United States and have no effect in a foreign country, an inventor who wishes patent protection in another country must apply for a patent in a specific country or in regional patent offices. Applicants may wish to consider the filing of an international application under the Patent Cooperation Treaty (PCT). An international (PCT) application generally has the same effect as a regular national patent application in each PCT-member country. The PCT process **simplifies** the filing of patent applications on the same invention in member countries, but **does not result** in a grant of "an international patent" and does not eliminate the need of applicants to file additional documents and fees in countries where patent protection is desired.

Almost every country has its own patent law, and a person desiring a patent in a particular country must make an application for patent in that country in accordance with its particular laws. Since the laws of many countries differ in various respects from the patent law of the United States, applicants are advised to seek guidance from specific foreign countries to ensure that patent rights are not lost prematurely.

Applicants also are advised that in the case of inventions made in the United States, the Director of the USPTO must issue a license before applicants can apply for a patent in a foreign country. The filing of a U.S. patent application serves as a request for a foreign filing license. The application's filing receipt contains further information and guidance as to the status of applicant's license for foreign filing.

Applicants may wish to consult the USPTO booklet, "General Information Concerning Patents" (specifically, the section entitled "Treaties and Foreign Patents") for more information on timeframes and deadlines for filing foreign patent applications. The guide is available either by contacting the USPTO Contact Center at 800-786-9199, or it can be viewed on the USPTO website at http://www.uspto.gov/web/offices/pac/doc/general/index.html.

For information on preventing theft of your intellectual property (patents, trademarks and copyrights), you may wish to consult the U.S. Government website, http://www.stopfakes.gov. Part of a Department of Commerce initiative, this website includes self-help "toolkits" giving innovators guidance on how to protect intellectual property in specific countries such as China, Korea and Mexico. For questions regarding patent enforcement issues, applicants may call the U.S. Government hotline at 1-866-999-HALT (1-866-999-4158).

LICENSE FOR FOREIGN FILING UNDER

Title 35, United States Code, Section 184

Title 37, Code of Federal Regulations, 5.11 & 5.15

GRANTED

The applicant has been granted a license under 35 U.S.C. 184, if the phrase "IF REQUIRED, FOREIGN FILING LICENSE GRANTED" followed by a date appears on this form. Such licenses are issued in all applications where

the conditions for issuance of a license have been met, regardless of whether or not a license may be required as set forth in 37 CFR 5.15. The scope and limitations of this license are set forth in 37 CFR 5.15(a) unless an earlier license has been issued under 37 CFR 5.15(b). The license is subject to revocation upon written notification. The date indicated is the effective date of the license, unless an earlier license of similar scope has been granted under 37 CFR 5.13 or 5.14.

This license is to be retained by the licensee and may be used at any time on or after the effective date thereof unless it is revoked. This license is automatically transferred to any related applications(s) filed under 37 CFR 1.53(d). This license is not retroactive.

The grant of a license does not in any way lessen the responsibility of a licensee for the security of the subject matter as imposed by any Government contract or the provisions of existing laws relating to espionage and the national security or the export of technical data. Licensees should apprise themselves of current regulations especially with respect to certain countries, of other agencies, particularly the Office of Defense Trade Controls, Department of State (with respect to Arms, Munitions and Implements of War (22 CFR 121-128)); the Bureau of Industry and Security, Department of Commerce (15 CFR parts 730-774); the Office of Foreign AssetsControl, Department of Treasury (31 CFR Parts 500+) and the Department of Energy.

NOT GRANTED

No license under 35 U.S.C. 184 has been granted at this time, if the phrase "IF REQUIRED, FOREIGN FILING LICENSE GRANTED" DOES NOT appear on this form. Applicant may still petition for a license under 37 CFR 5.12, if a license is desired before the expiration of 6 months from the filing date of the application. If 6 months has lapsed from the filing date of this application and the licensee has not received any indication of a secrecy order under 35 U.S.C. 181, the licensee may foreign file the application pursuant to 37 CFR 5.15(b).

UNITED STATES PATENT AND TRADEMARK OFFICE

Commissioner for Patents
United States Patent and Trademark Office
P.O. Box 1450
Alexandria, VA 22313-1450
www.uspto.gov

Decision Date : October 5,2011

In re Application of :

Medrith Nolan

Application No : 12410169

Filed : 24-Mar-2009

Attorney Docket No : AOF001

DECISION ON REQUEST TO WITHDRAW AS ATTORNEY/AGENTOF RECORD

This is an electronic decision on the Request to Withdraw as attorney or agent of record under 37 CFR § 1.36(b), filed October 5,2011

The request is **APPROVED.**

The request was signed by Amir H. Raubvogel (registration no. 37070) on behalf of all attorneys/agents associated with Customer Number 48384 . All attorneys/agents associated with Cusotmer Number 48384 have been withdrawn.

Since there are no remaining attorneys of record, all future communications from the Office will be directed to the first named inventor or assignee that has properly made itself of record pursuant to 37 CFR 3.71, with correspondence address:

Name	Medrith Deborah Nolan
Name2	Art of Flame
Address 1	849 Almar Ave., #C-419
Address 2	
City	Santa Cruz
State	CA
Postal Code	95060
Country	US

As a reminder, requester is required to inform the first named inventor or assignee that has properly made itself of record pursuant to 37 CFR 3.71 of the electronically processed petition.

Telephone inquiries concerning this decision should be directed to the Patent Electronic Business Center (EBC) at 866-217-9197.

Office of Petitions

Doc Code: PET.AUTO **Document Description: Petition automatically granted by EFS-Web**	PTO/SB/83 U.S. Patent and Trademark Office Department of Commerce

Electronic Petition Request	**REQUEST FOR WITHDRAWAL AS ATTORNEY OR AGENT AND CHANGE OF CORRESPONDENCE ADDRESS**
Application Number	12410169
Filing Date	24-Mar-2009
First Named Inventor	Medrith Nolan
Art Unit	1774
Examiner Name	CHRISTOPHER VANDEUSEN
Attorney Docket Number	AOF001
Title	SYSTEMS AND METHODS FOR HEATING A LIQUID FUEL OF A CANDLE

◉ Please withdraw me as attorney or agent for the above identified patent application and the practitioners of record associated with Customer Number: 48384

The reason(s) for this request are those described in 37 CFR:

10.40(b)(4)

Certifications

☒ I/We have given reasonable notice to the client, prior to the expiration of the response period, that the practitioner(s) intend to withdraw from employment

☒ I/We have delivered to the client or a duly authorized representative of the client all papers and property (including funds) to which the client is entitled

☒ I/We have notified the client of any responses that may be due and the time frame within which the client must respond

Change the correspondence address and direct all future correspondence to the first named inventor or assignee that has properly made itself of record pursuant to 37 CFR 3.71:

Name	Medrith Deborah Nolan Art of Flame
Address	849 Almar Ave., #C-419
City	Santa Cruz
State	CA
Postal Code	95060
Country	US

I am authorized to sign on behalf of myself and all withdrawing practitioners.	
Signature	/Amir H. Raubvogel/
Name	Amir H. Raubvogel
Registration Number	37070

UNITED STATES PATENT AND TRADEMARK OFFICE

UNITED STATES DEPARTMENT OF COMMERCE
United States Patent and Trademark Office
Address: COMMISSIONER FOR PATENTS
P.O. Box 1450
Alexandria, Virginia 22313-1450
www.uspto.gov

APPLICATION NO.	FILING DATE	FIRST NAMED INVENTOR	ATTORNEY DOCKET NO.	CONFIRMATION NO.
12/410,176	03/24/2009	Kazuhito Ichihara	1924.83954	2721

7590 09/23/2010

GREER, BURNS & CRAIN
300 S WACKER DR
25TH FLOOR
CHICAGO, IL 60606

EXAMINER	
LOUIS JACQUES, JACQUES H	

ART UNIT	PAPER NUMBER
2112	

MAIL DATE	DELIVERY MODE
09/23/2010	PAPER

DECISION GRANTING PETITION UNDER 37 CFR 1.138(d)

The declaration of express abandonment is recognized

This is in response to the petition under 37 CFR 1.138(d), requesting for a refund of any previously paid search fee and excess claims fee in the above-identified application.

The petition is granted.

The express abandonment is recognized. Any previously paid search fee and excess claims fee are hereby refunded.

Telephone inquiries should be directed to the Office of Data Management at (571) 272-4200.

Betty Powell

Patent Publication Branch
Office of Data Management

UNITED STATES PATENT AND TRADEMARK OFFICE

Commissioner for Patents
United States Patent and Trademark Office
P.O. Box 1450
Alexandria, VA 22313-1450
www.uspto.gov

STERNE, KESSLER, GOLDSTEIN & FOX, P.L.L.C.
1100 NEW YORK AVE., N.W.
WASHINGTON DC 20005

MAILED

JAN 30 2012

OFFICE OF PETITIONS

In re Application of :
Mi et al. :
Application No. 12/410,181 : DECISION DISMISSING PETITION
Filed: March 24, 2009 : UNDER 37 CFR 1.78(a)(6)
Attorney Docket No. 2159.1280002/EJH/CLD :

This is a decision on the petition under 37 CFR 1.78(a)(6), filed January 23, 2012, to accept an unintentionally delayed claim under 35 U.S.C. 119(e) for the benefit of prior-filed provisional Application No. 60/879,324, filed January 9, 2007.

The petition is **DISMISSED**.

A petition under 37 CFR 1.78(a)(6) for acceptance of a delayed benefit claim is only applicable to those applications filed on or after November 29, 2000 and after the expiration of the period specified in 37 CFR 1.78(a)(5)(ii). In addition, the petition under 37 CFR 1.78(a)(6) must be accompanied by:

(1) the reference required by 35 U.S.C. § 119(e) and 37 CFR 1.78(a)(5)(i) of the prior-filed application, unless previously submitted;
(2) the surcharge set forth in § 1.17(t); and
(3) a statement that the entire delay between the date the claim was due under 37 CFR 1.78(a)(5)(ii) and the date the claim was filed was unintentional. The Director may require additional information where there is a question whether the delay was unintentional.

The petition fails to comply with item (1) above.

The reference to add the above-noted prior-filed application in the first sentence of the specification on page one following the title is not acceptable as drafted since it improperly incorporates by reference prior-filed Application No. 60/879,324.

Pursuant to MPEP 201.11(III)(F),

> An incorporation by reference statement added after an application's filing date is not effective because no new matter can be added to an application after its filing date (see 35 U.S.C. 132(a)). If an incorporation by reference statement is included in an amendment to the specification to add a benefit claim after the filing date of the application, the amendment would not be proper. When a benefit claim is submitted after the filing of an application, the reference to the prior application cannot include an incorporation by reference statement of the prior application unless an incorporation by reference statement of the prior application was presented upon filing of the application. See Dart Indus. v. Banner, 636 F.2d 684, 207 USPQ 273 (C.A.D.C. 1980).

If reconsideration of this decision is desired, a renewed petition under 37 CFR 1.78(a)(6) and a supplemental Application Data Sheet or an amendment to the specification removing the incorporation by reference statement of prior filed Application No. 60/879,324 is required. The incorporation by reference statement of prior filed PCT/US2008/000316 may remain because the incorporation by reference statement was presented upon the filing of this application. The Office notes that 37 CFR 1.33(b) requires that amendments and other papers, except for written assertions pursuant to 37 CFR 1.27(c)(2)(ii), filed in an application must be signed by an appropriate party. Therefore, a supplemental Application Data Sheet or an amendment submitted after the filing of an application must be signed in accordance with 37 CFR 1.33(b).

Further correspondence with respect to this matter should be addressed as follows:

By mail: Mail Stop PETITIONS
Commissioner for Patents
Post Office Box 1450
Alexandria, VA 22313-1450

By hand: Customer Service Window
Mail Stop Petitions
Randolph Building
401 Dulany Street
Alexandria, VA 22314

By fax: (571) 273-8300
ATTN: Office of Petitions

Correspondence may also be submitted via the Electronic Filing System of the USPTO.

Any questions concerning this matter may be directed to the undersigned at (571) 272-3211.

/Christina Tartera Donnell/

Christina Tartera Donnell
Senior Petitions Attorney
Office of Petitions

UNITED STATES PATENT AND TRADEMARK OFFICE

UNITED STATES DEPARTMENT OF COMMERCE
United States Patent and Trademark Office
Address: COMMISSIONER FOR PATENTS
P.O. Box 1450
Alexandria, Virginia 22313-1450
www.uspto.gov

APPLICATION NUMBER	FILING or 371(c) DATE	GRP ART UNIT	FIL FEE REC'D	ATTY.DOCKET.NO	TOT CLAIMS	IND CLAIMS
12/410,181	03/24/2009	1649	3410	2159.1280002/EJH/CLD	30	8

CONFIRMATION NO. 2732

53644
STERNE, KESSLER, GOLDSTEIN & FOX, P.L.L.C.
1100 NEW YORK AVE., N.W.
WASHINGTON, DC 20005

CORRECTED FILING RECEIPT

Date Mailed: 01/30/2012

Receipt is acknowledged of this non-provisional patent application. The application will be taken up for examination in due course. Applicant will be notified as to the results of the examination. Any correspondence concerning the application must include the following identification information: the U.S. APPLICATION NUMBER, FILING DATE, NAME OF APPLICANT, and TITLE OF INVENTION. Fees transmitted by check or draft are subject to collection. Please verify the accuracy of the data presented on this receipt. **If an error is noted on this Filing Receipt, please submit a written request for a Filing Receipt Correction. Please provide a copy of this Filing Receipt with the changes noted thereon. If you received a "Notice to File Missing Parts" for this application, please submit any corrections to this Filing Receipt with your reply to the Notice. When the USPTO processes the reply to the Notice, the USPTO will generate another Filing Receipt incorporating the requested corrections**

Applicant(s)

Sha Mi, Belmont, MA;
R. Blake Pepinsky, Arlington, MA;
Zhaohui Shao, Brookline, MA;
Ellen A. Garber, Cambridge, MA;
Steven D. Miklasz, Upton, MA;
Christilyn Graff, Cambridge, MA;

Assignment For Published Patent Application

Biogen IDEC MA Inc.

Power of Attorney: The patent practitioners associated with Customer Number 53644

Domestic Priority data as claimed by applicant

This application is a CON of PCT/US2008/000316 01/09/2008

Foreign Applications (You may be eligible to benefit from the **Patent Prosecution Highway** program at the USPTO. Please see http://www.uspto.gov for more information.)

If Required, Foreign Filing License Granted: 04/16/2009

The country code and number of your priority application, to be used for filing abroad under the Paris Convention, is **US 12/410,181**

Projected Publication Date: Not Applicable

Non-Publication Request: No

Early Publication Request: No

Title

SP35 ANTIBODIES AND USES THEREOF

Preliminary Class

424

PROTECTING YOUR INVENTION OUTSIDE THE UNITED STATES

Since the rights granted by a U.S. patent extend only throughout the territory of the United States and have no effect in a foreign country, an inventor who wishes patent protection in another country must apply for a patent in a specific country or in regional patent offices. Applicants may wish to consider the filing of an international application under the Patent Cooperation Treaty (PCT). An international (PCT) application generally has the same effect as a regular national patent application in each PCT-member country. The PCT process **simplifies** the filing of patent applications on the same invention in member countries, but **does not result** in a grant of "an international patent" and does not eliminate the need of applicants to file additional documents and fees in countries where patent protection is desired.

Almost every country has its own patent law, and a person desiring a patent in a particular country must make an application for patent in that country in accordance with its particular laws. Since the laws of many countries differ in various respects from the patent law of the United States, applicants are advised to seek guidance from specific foreign countries to ensure that patent rights are not lost prematurely.

Applicants also are advised that in the case of inventions made in the United States, the Director of the USPTO must issue a license before applicants can apply for a patent in a foreign country. The filing of a U.S. patent application serves as a request for a foreign filing license. The application's filing receipt contains further information and guidance as to the status of applicant's license for foreign filing.

Applicants may wish to consult the USPTO booklet, "General Information Concerning Patents" (specifically, the section entitled "Treaties and Foreign Patents") for more information on timeframes and deadlines for filing foreign patent applications. The guide is available either by contacting the USPTO Contact Center at 800-786-9199, or it can be viewed on the USPTO website at http://www.uspto.gov/web/offices/pac/doc/general/index.html.

For information on preventing theft of your intellectual property (patents, trademarks and copyrights), you may wish to consult the U.S. Government website, http://www.stopfakes.gov. Part of a Department of Commerce initiative, this website includes self-help "toolkits" giving innovators guidance on how to protect intellectual property in specific countries such as China, Korea and Mexico. For questions regarding patent enforcement issues, applicants may call the U.S. Government hotline at 1-866-999-HALT (1-866-999-4158).

LICENSE FOR FOREIGN FILING UNDER

Title 35, United States Code, Section 184

Title 37, Code of Federal Regulations, 5.11 & 5.15

GRANTED

The applicant has been granted a license under 35 U.S.C. 184, if the phrase "IF REQUIRED, FOREIGN FILING LICENSE GRANTED" followed by a date appears on this form. Such licenses are issued in all applications where the conditions for issuance of a license have been met, regardless of whether or not a license may be required as

set forth in 37 CFR 5.15. The scope and limitations of this license are set forth in 37 CFR 5.15(a) unless an earlier license has been issued under 37 CFR 5.15(b). The license is subject to revocation upon written notification. The date indicated is the effective date of the license, unless an earlier license of similar scope has been granted under 37 CFR 5.13 or 5.14.

This license is to be retained by the licensee and may be used at any time on or after the effective date thereof unless it is revoked. This license is automatically transferred to any related applications(s) filed under 37 CFR 1.53(d). This license is not retroactive.

The grant of a license does not in any way lessen the responsibility of a licensee for the security of the subject matter as imposed by any Government contract or the provisions of existing laws relating to espionage and the national security or the export of technical data. Licensees should apprise themselves of current regulations especially with respect to certain countries, of other agencies, particularly the Office of Defense Trade Controls, Department of State (with respect to Arms, Munitions and Implements of War (22 CFR 121-128)); the Bureau of Industry and Security, Department of Commerce (15 CFR parts 730-774); the Office of Foreign AssetsControl, Department of Treasury (31 CFR Parts 500+) and the Department of Energy.

NOT GRANTED

No license under 35 U.S.C. 184 has been granted at this time, if the phrase "IF REQUIRED, FOREIGN FILING LICENSE GRANTED" DOES NOT appear on this form. Applicant may still petition for a license under 37 CFR 5.12, if a license is desired before the expiration of 6 months from the filing date of the application. If 6 months has lapsed from the filing date of this application and the licensee has not received any indication of a secrecy order under 35 U.S.C. 181, the licensee may foreign file the application pursuant to 37 CFR 5.15(b).

SelectUSA

The United States represents the largest, most dynamic marketplace in the world and is an unparalleled location for business investment, innovation and commercialization of new technologies. The USA offers tremendous resources and advantages for those who invest and manufacture goods here. Through SelectUSA, our nation works to encourage, facilitate, and accelerate business investment. To learn more about why the USA is the best country in the world to develop technology, manufacture products, and grow your business, visit SelectUSA.gov.

UNITED STATES PATENT AND TRADEMARK OFFICE

Commissioner for Patents
United States Patent and Trademark Office
P.O. Box 1450
Alexandria, VA 22313-1450
www.uspto.gov

STERNE, KESSLER, GOLDSTEIN & FOX, P.L.L.C.
1100 NEW YORK AVE., N.W.
WASHINGTON DC 20005

MAILED
FEB 06 2012
OFFICE OF PETITIONS

In re Application of	:	
Mi et al.	:	
Application No. 12/410,181	:	DECISION GRANTING PETITION
Filed: March 24, 2009	:	UNDER 37 CFR 1.78(a)(6)
Attorney Docket No. 2159.1280002/EJH/CLD	:	

This is a decision on the renewed petition under 37 CFR 1.78(a)(6), filed February 2, 2012, to accept an unintentionally delayed claim under 35 U.S.C. 119(e) for the benefit of prior-filed provisional Application No. 60/879,324, filed January 9, 2007.

The petition is **GRANTED**.

A petition under 37 CFR 1.78(a)(6) for acceptance of a delayed benefit claim is only applicable to those applications filed on or after November 29, 2000 and after the expiration of the period specified in 37 CFR 1.78(a)(5)(ii). In addition, the petition under 37 CFR 1.78(a)(6) must be accompanied by:

(1) the reference required by 35 U.S.C. § 119(e) and 37 CFR 1.78(a)(5)(i) of the prior-filed application, unless previously submitted;
(2) the surcharge set forth in § 1.17(t); and
(3) a statement that the entire delay between the date the claim was due under 37 CFR 1.78(a)(5)(ii) and the date the claim was filed was unintentional. The Director may require additional information where there is a question whether the delay was unintentional.

Additionally, the present nonprovisional application must be pending at the time of filing of the reference to the prior-filed provisional application as required by 37 CFR 1.78(a)(5)(ii). Further,

the nonprovisional application claiming the benefit of the prior-filed provisional application must have been filed within twelve months of the filing date of the prior-filed provisional application.

All of the above requirements having been satisfied, the late claim under 35 U.S.C. 119(e) for the benefit of the prior-filed provisional application is accepted as being unintentionally delayed.

The granting of the petition to accept the delayed benefit claim to the prior-filed application under 37 CFR 1.78(a)(6) should not be construed as meaning that this application is entitled to the benefit of the filing date of the prior-filed application. In order for this application to be entitled to the benefit of the prior-filed application, all other requirements under 35 U.S.C. 119(e) and 37 CFR 1.78(a)(4) and (a)(5) must be met. Similarly, the fact that the corrected Filing Receipt accompanying this decision on petition includes the prior-filed application should not be construed as meaning that applicant is entitled to the claim for benefit of priority to the prior-filed application noted thereon. Accordingly, the examiner will, in due course, consider this benefit claim and determine whether the application is entitled to the benefit of the earlier filing date.

A corrected Filing Receipt, which includes the benefit claim to the prior-filed provisional application, accompanies this decision on petition.

Any inquiries concerning this decision may be directed to the undersigned at (571) 272-3211. All other inquiries concerning either the examination procedures or status of the application should be directed to the Technology Center.

The application is being forwarded to Technology Center AU 1649 for consideration by the examiner of the claim under 35 U.S.C. 119(e) for the benefit of the prior-filed provisional application.

/Christina Tartera Donnell/

Christina Tartera Donnell
Senior Petitions Attorney
Office of Petitions

ATTACHMENT: Corrected Filing Receipt

UNITED STATES PATENT AND TRADEMARK OFFICE

UNITED STATES DEPARTMENT OF COMMERCE
United States Patent and Trademark Office
Address: COMMISSIONER FOR PATENTS
P.O. Box 1450
Alexandria, Virginia 22313-1450
www.uspto.gov

APPLICATION NUMBER	FILING or 371(c) DATE	GRP ART UNIT	FIL FEE REC'D	ATTY.DOCKET.NO	TOT CLAIMS	IND CLAIMS
12/410,181	03/24/2009	1649	3410	2159.1280002/EJH/CLD	30	8

CONFIRMATION NO. 2732

53644
STERNE, KESSLER, GOLDSTEIN & FOX, P.L.L.C.
1100 NEW YORK AVE., N.W.
WASHINGTON, DC 20005

CORRECTED FILING RECEIPT

OC00000052409769

Date Mailed: 02/03/2012

Receipt is acknowledged of this non-provisional patent application. The application will be taken up for examination in due course. Applicant will be notified as to the results of the examination. Any correspondence concerning the application must include the following identification information: the U.S. APPLICATION NUMBER, FILING DATE, NAME OF APPLICANT, and TITLE OF INVENTION. Fees transmitted by check or draft are subject to collection. Please verify the accuracy of the data presented on this receipt. **If an error is noted on this Filing Receipt, please submit a written request for a Filing Receipt Correction. Please provide a copy of this Filing Receipt with the changes noted thereon. If you received a "Notice to File Missing Parts" for this application, please submit any corrections to this Filing Receipt with your reply to the Notice. When the USPTO processes the reply to the Notice, the USPTO will generate another Filing Receipt incorporating the requested corrections**

Applicant(s)

Sha Mi, Belmont, MA;
R. Blake Pepinsky, Arlington, MA;
Zhaohui Shao, Brookline, MA;
Ellen A. Garber, Cambridge, MA;
Steven D. Miklasz, Upton, MA;
Christilyn Graff, Cambridge, MA;

Assignment For Published Patent Application

Biogen IDEC MA Inc.

Power of Attorney: The patent practitioners associated with Customer Number 53644

Domestic Priority data as claimed by applicant

This application is a CON of PCT/US2008/000316 01/09/2008
which claims benefit of 60/879,324 01/09/2007

Foreign Applications (You may be eligible to benefit from the **Patent Prosecution Highway** program at the USPTO. Please see http://www.uspto.gov for more information.)

If Required, Foreign Filing License Granted: 04/16/2009

The country code and number of your priority application, to be used for filing abroad under the Paris Convention, is **US 12/410,181**

Projected Publication Date: Not Applicable

Non-Publication Request: No

Early Publication Request: No

Title

SP35 ANTIBODIES AND USES THEREOF

Preliminary Class

424

PROTECTING YOUR INVENTION OUTSIDE THE UNITED STATES

Since the rights granted by a U.S. patent extend only throughout the territory of the United States and have no effect in a foreign country, an inventor who wishes patent protection in another country must apply for a patent in a specific country or in regional patent offices. Applicants may wish to consider the filing of an international application under the Patent Cooperation Treaty (PCT). An international (PCT) application generally has the same effect as a regular national patent application in each PCT-member country. The PCT process **simplifies** the filing of patent applications on the same invention in member countries, but **does not result** in a grant of "an international patent" and does not eliminate the need of applicants to file additional documents and fees in countries where patent protection is desired.

Almost every country has its own patent law, and a person desiring a patent in a particular country must make an application for patent in that country in accordance with its particular laws. Since the laws of many countries differ in various respects from the patent law of the United States, applicants are advised to seek guidance from specific foreign countries to ensure that patent rights are not lost prematurely.

Applicants also are advised that in the case of inventions made in the United States, the Director of the USPTO must issue a license before applicants can apply for a patent in a foreign country. The filing of a U.S. patent application serves as a request for a foreign filing license. The application's filing receipt contains further information and guidance as to the status of applicant's license for foreign filing.

Applicants may wish to consult the USPTO booklet, "General Information Concerning Patents" (specifically, the section entitled "Treaties and Foreign Patents") for more information on timeframes and deadlines for filing foreign patent applications. The guide is available either by contacting the USPTO Contact Center at 800-786-9199, or it can be viewed on the USPTO website at http://www.uspto.gov/web/offices/pac/doc/general/index.html.

For information on preventing theft of your intellectual property (patents, trademarks and copyrights), you may wish to consult the U.S. Government website, http://www.stopfakes.gov. Part of a Department of Commerce initiative, this website includes self-help "toolkits" giving innovators guidance on how to protect intellectual property in specific countries such as China, Korea and Mexico. For questions regarding patent enforcement issues, applicants may call the U.S. Government hotline at 1-866-999-HALT (1-866-999-4158).

LICENSE FOR FOREIGN FILING UNDER

Title 35, United States Code, Section 184

Title 37, Code of Federal Regulations, 5.11 & 5.15

GRANTED

The applicant has been granted a license under 35 U.S.C. 184, if the phrase "IF REQUIRED, FOREIGN FILING LICENSE GRANTED" followed by a date appears on this form. Such licenses are issued in all applications where the conditions for issuance of a license have been met, regardless of whether or not a license may be required as

set forth in 37 CFR 5.15. The scope and limitations of this license are set forth in 37 CFR 5.15(a) unless an earlier license has been issued under 37 CFR 5.15(b). The license is subject to revocation upon written notification. The date indicated is the effective date of the license, unless an earlier license of similar scope has been granted under 37 CFR 5.13 or 5.14.

This license is to be retained by the licensee and may be used at any time on or after the effective date thereof unless it is revoked. This license is automatically transferred to any related applications(s) filed under 37 CFR 1.53(d). This license is not retroactive.

The grant of a license does not in any way lessen the responsibility of a licensee for the security of the subject matter as imposed by any Government contract or the provisions of existing laws relating to espionage and the national security or the export of technical data. Licensees should apprise themselves of current regulations especially with respect to certain countries, of other agencies, particularly the Office of Defense Trade Controls, Department of State (with respect to Arms, Munitions and Implements of War (22 CFR 121-128)); the Bureau of Industry and Security, Department of Commerce (15 CFR parts 730-774); the Office of Foreign AssetsControl, Department of Treasury (31 CFR Parts 500+) and the Department of Energy.

NOT GRANTED

No license under 35 U.S.C. 184 has been granted at this time, if the phrase "IF REQUIRED, FOREIGN FILING LICENSE GRANTED" DOES NOT appear on this form. Applicant may still petition for a license under 37 CFR 5.12, if a license is desired before the expiration of 6 months from the filing date of the application. If 6 months has lapsed from the filing date of this application and the licensee has not received any indication of a secrecy order under 35 U.S.C. 181, the licensee may foreign file the application pursuant to 37 CFR 5.15(b).

SelectUSA

The United States represents the largest, most dynamic marketplace in the world and is an unparalleled location for business investment, innovation and commercialization of new technologies. The USA offers tremendous resources and advantages for those who invest and manufacture goods here. Through SelectUSA, our nation works to encourage, facilitate, and accelerate business investment. To learn more about why the USA is the best country in the world to develop technology, manufacture products, and grow your business, visit SelectUSA.gov.

UNITED STATES PATENT AND TRADEMARK OFFICE

Commissioner for Patents
United States Patent and Trademark Office
P.O. Box 1450
Alexandria, VA 22313-1450
www.uspto.gov

HOLLAND & KNIGHT LLP
10 ST. JAMES AVENUE
BOSTON MA 02116-3889

MAILED

APR 15 2011

OFFICE OF PETITIONS

In re Application of
Louis Jack Norman II
Application No. 12/410,242
Filed: March 24, 2009
Attorney Docket No. 113493.00005

DECISION ON PETITION
TO WITHDRAW
FROM RECORD

This is a decision on the Request to Withdraw as attorney or agent of record under 37 C.F.R. § 1.36(b), filed March 16, 2011.

The request is **APPROVED**.

A grantable request to withdraw as attorney/agent of record must be signed by every attorney/agent seeking to withdraw or contain a clear indication that one attorney is signing on behalf of another/others. A request to withdraw will not be approved unless at least 30 (thirty) days would remain between the date of approval and the later of the expiration date of a time to file a response or the expiration date of the maximum time period which can be extended under 37 C.F.R. § 1.136(a).

The request was signed by V. Raman Bharatula on behalf of all attorneys/agents associated with customer number 54975. All attorneys/agents associated with customer number 54975 have been withdrawn.

The correspondence address has been changed and is copied below.

Telephone inquiries concerning this decision should be directed to Kimberly Inabinet at 571-272-4618.

/Kimberly Inabinet/

Kimberly Inabinet
Petitions Examiner
Office of Petitions

cc: Louis Jack Norman
20 Sturges Street
Binghamton, NY 13901

UNITED STATES PATENT AND TRADEMARK OFFICE

UNITED STATES DEPARTMENT OF COMMERCE
United States Patent and Trademark Office
Address: COMMISSIONER FOR PATENTS
P.O. Box 1450
Alexandria, Virginia 22313-1450
www.uspto.gov

APPLICATION NUMBER	FILING OR 371(C) DATE	FIRST NAMED APPLICANT	ATTY. DOCKET NO./TITLE
12/410,242	03/24/2009	Louis Jack Norman	113493.00005

CONFIRMATION NO. 2850

54975
HOLLAND & KNIGHT LLP
10 ST. JAMES AVENUE
BOSTON, MA 02116-3889

POWER OF ATTORNEY NOTICE

OC000000047171317

Date Mailed: 04/15/2011

NOTICE REGARDING CHANGE OF POWER OF ATTORNEY

This is in response to the Power of Attorney filed 03/16/2011.

- The withdrawal as attorney in this application has been accepted. Future correspondence will be mailed to the new address of record. 37 CFR 1.33.

/kainabinet/

Office of Data Management, Application Assistance Unit (571) 272-4000, or (571) 272-4200, or 1-888-786-0101

UNITED STATES PATENT AND TRADEMARK OFFICE

UNITED STATES DEPARTMENT OF COMMERCE
United States Patent and Trademark Office
Address: COMMISSIONER FOR PATENTS
P.O. Box 1450
Alexandria, Virginia 22313-1450
www.uspto.gov

APPLICATION NO.	FILING DATE	FIRST NAMED INVENTOR	ATTORNEY DOCKET NO.	CONFIRMATION NO.
12/410,264	03/24/2009	Isao Tsuyama	1924.84046	2895

7590 10/08/2010
GREER, BURNS & CRAIN
300 S WACKER DR
25TH FLOOR
CHICAGO, IL 60606

EXAMINER
LE, DINH THANH

ART UNIT	PAPER NUMBER
2816	

MAIL DATE	DELIVERY MODE
10/08/2010	PAPER

DECISION GRANTING PETITION UNDER 37 CFR 1.138(d)

The declaration of express abandonment is recognized

This is in response to the petition under 37 CFR 1.138(d), requesting for a refund of any previously paid search fee and excess claims fee in the above-identified application.

The petition is granted.

The express abandonment is recognized. Any previously paid search fee and excess claims fee are hereby refunded.

Telephone inquiries should be directed to the Office of Data Management at (571) 272-4200.

Nimi Farmer

Patent Publication Branch
Office of Data Management

Adjustment date: 10/12/2010 [illegible]
03/25/2009 INTERSW 00000373 072069 12410264
[illegible]

FORM PET651G (Rev. 08/07)

Doc Code: PPH.PCT.652
Document Description: Petition to make special under PCT-Patent Pros Hwy

PTO/SB/20PCT-KR (06-10)
Approved for use through 01/31/2012. OMB 0651-0058
U.S. Patent and Trademark Office; U. S. DEPARTMENT OF COMMERCE
Under the Paperwork Reduction Act of 1995, no persons are required to respond to a collection of information unless it displays a valid OMB control number.

REQUEST FOR PARTICIPATION IN THE PATENT COOPERATION TREATY - PATENT PROSECUTION HIGHWAY (PCT-PPH) PILOT PROGRAM BETWEEN THE KOREAN INTELLECTUAL PROPERTY OFFICE (KIPO) AND THE USPTO

Application No:	12/410,393	Filing date:	Mar. 24, 2009
First Named Inventor:	Christopher Engel		
Title of the Invention:	FASTENING MECHANISM		

THIS REQUEST FOR PARTICIPATION IN THE PCT-PPH PILOT PROGRAM ALONG WITH THE REQUIRED DOCUMENTS MUST BE SUBMITTED VIA EFS-WEB. INFORMATION REGARDING EFS-WEB IS AVAILABLE AT HTTP://WWW.USPTO.GOV/EBC/EFS_HELP.HTML

APPLICANT HEREBY REQUESTS PARTICIPATION IN THE PCT-PPH PROGRAM AND PETITIONS TO MAKE THE ABOVE-IDENTIFIED APPLICATION SPECIAL UNDER THE PCT-PPH PROGRAM.

The above-identified application is (1) a national stage entry of the corresponding PCT application, or (2) a national stage entry of another PCT application which claims priority to the corresponding PCT application, or (3) a national application that claims domestic/ foreign priority to the corresponding PCT application, or (4) a national application which forms the basis for the priority claim in the corresponding PCT application, or (5) a continuing application of a U.S. application that satisfies one of (1) to (4) above, or (6) a U.S. application that claims domestic benefit to a U.S. provisional application which forms the basis for the priority claim in the corresponding PCT application.

The corresponding PCT application number(s) is/are: US2010/028259

The international filing date of the corresponding PCT application(s) is/are: 03/23/2010

I. List of Required Documents:

a. **A copy of the latest international work product (WO/ISA, WO/IPEA, or IPER) in the above–identified corresponding PCT application(s)**

☑ Is attached.

☐ Is not attached because the document is already in the U.S. application.

b. **A copy of all claims which were indicated as having novelty, inventive step and industrial applicability in the above-identified corresponding PCT application(s).**

☐ Is attached.

☑ Is not attached because the document is already in the U.S. application.

c. **English translations of the documents in a. and b. above are attached (if the documents are not in the English language). A statement that the English translation is accurate is attached for the document in b. above.**

This collection of information is required by 35 U.S.C. 119, 37 CFR 1.55, and 37 CFR 1.102(d). The information is required to obtain or retain a benefit by the public, which is to file (and by the USPTO to process) an application. Confidentiality is governed by 35 U.S.C. 122 and 37 CFR 1.11 and 1.14. This collection is estimated to take 2 hours to complete, including gathering, preparing, and submitting the completed application form to the USPTO. Time will vary depending upon the individual case. Any comments on the amount of time you require to complete this form and/or suggestions for reducing this burden should be sent to the Chief Information Officer, U.S. Patent and Trademark Office, U.S. Department of Commerce, P.O. Box 1450, Alexandria, VA 22313-1450. DO NOT SEND FEES OR COMPLETED FORMS TO THIS ADDRESS.

PTO/SB/20PCT-KR (06-10)
Approved for use through 01/31/2012. OMB 0651-0058
U.S.Patent and Trademark Office; U.S. DEPARTMENT OF COMMERCE
Under the Paperwork Reduction Act of 1995, no persons are required to respond to a collection of information unless it displays a valid OMB control number.

REQUEST FOR PARTICIPATION IN THE PCT-PPH PILOT PROGRAM BETWEEN THE KIPO AND THE USPTO

(continued)

Application No.:	12/432,265
First Named Inventor:	Ronald L. Wilson

d. **(1) An information disclosure statement listing the documents cited in the international work products (ISR, WO/ISA, WO/IPEA, IPER) of the corresponding PCT application.**

☑ Is attached

☐ Has already been filed in the above-identified U.S. application on _____

(2) Copies of all documents (except) for U.S. patents or U.S. patent application publications)

☑ Are attached.

☐ Have already been filed in the above-identified U.S. application on _____

II. Claims Correspondence Table:

Claims in US Application	Patentable Claims in the corresponding PCT Application	Explanation regarding the correspondence
1-20	1-20	Claims are identical

III. All the claims in the US application sufficiently correspond to the patentable claims in the corresponding PCT application.

Signature /kyri tsircou/	Date 02/02/2011
Name (Print/Typed) Kyriacos Tsircou	Registration Number 53705

Privacy Act Statement

The **Privacy Act of 1974 (P.L. 93-579)** requires that you be given certain information in connection with your submission of the attached form related to a patent application or patent. Accordingly, pursuant to the requirements of the Act, please be advised that: (1) the general authority for the collection of this information is 35 U.S.C. 2(b)(2); (2) furnishing of the information solicited is voluntary; and (3) the principal purpose for which the information is used by the U.S. Patent and Trademark Office is to process and/or examine your submission related to a patent application or patent. If you do not furnish the requested information, the U.S. Patent and Trademark Office may not be able to process and/or examine your submission, which may result in termination of proceedings or abandonment of the application or expiration of the patent.

The information provided by you in this form will be subject to the following routine uses:

1. The information on this form will be treated confidentially to the extent allowed under the Freedom of Information Act (5 U.S.C. 552) and the Privacy Act (5 U.S.C 552a). Records from this system of records may be disclosed to the Department of Justice to determine whether disclosure of these records is required by the Freedom of Information Act.
2. A record from this system of records may be disclosed, as a routine use, in the course of presenting evidence to a court, magistrate, or administrative tribunal, including disclosures to opposing counsel in the course of settlement negotiations.
3. A record in this system of records may be disclosed, as a routine use, to a Member of Congress submitting a request involving an individual, to whom the record pertains, when the individual has requested assistance from the Member with respect to the subject matter of the record.
4. A record in this system of records may be disclosed, as a routine use, to a contractor of the Agency having need for the information in order to perform a contract. Recipients of information shall be required to comply with the requirements of the Privacy Act of 1974, as amended, pursuant to 5 U.S.C. 552a(m).
5. A record related to an International Application filed under the Patent Cooperation Treaty in this system of records may be disclosed, as a routine use, to the International Bureau of the World Intellectual Property Organization, pursuant to the Patent Cooperation Treaty.
6. A record in this system of records may be disclosed, as a routine use, to another federal agency for purposes of National Security review (35 U.S.C. 181) and for review pursuant to the Atomic Energy Act (42 U.S.C. 218(c)).
7. A record from this system of records may be disclosed, as a routine use, to the Administrator, General Services, or his/her designee, during an inspection of records conducted by GSA as part of that agency's responsibility to recommend improvements in records management practices and programs, under authority of 44 U.S.C. 2904 and 2906. Such disclosure shall be made in accordance with the GSA regulations governing inspection of records for this purpose, and any other relevant (*i.e.*, GSA or Commerce) directive. Such disclosure shall not be used to make determinations about individuals.
8. A record from this system of records may be disclosed, as a routine use, to the public after either publication of the application pursuant to 35 U.S.C. 122(b) or issuance of a patent pursuant to 35 U.S.C. 151. Further, a record may be disclosed, subject to the limitations of 37 CFR 1.14, as a routine use, to the public if the record was filed in an application which became abandoned or in which the proceedings were terminated and which application is referenced by either a published application, an application open to public inspection or an issued patent.
9. A record from this system of records may be disclosed, as a routine use, to a Federal, State, or local law enforcement agency, if the USPTO becomes aware of a violation or potential violation of law or regulation.

UNITED STATES PATENT AND TRADEMARK OFFICE

UNITED STATES DEPARTMENT OF COMMERCE
United States Patent and Trademark Office
Address: COMMISSIONER FOR PATENTS
P.O. Box 1450
Alexandria, Virginia 22313-1450
www.uspto.gov

APPLICATION NO.	FILING DATE	FIRST NAMED INVENTOR	ATTORNEY DOCKET NO.	CONFIRMATION NO.
12/410,393	03/24/2009	Christopher Engel	TMX-00365	3108

60780 7590 03/17/2011

TSIRCOU INTELLECTUAL PROPERTY LAW
655 Central Ave., 17th Floor
Glendale, CA 91203

EXAMINER	
JOHNSON, PHILIP	

ART UNIT	PAPER NUMBER
3677	

MAIL DATE	DELIVERY MODE
03/17/2011	PAPER

Please find below and/or attached an Office communication concerning this application or proceeding.

The time period for reply, if any, is set in the attached communication.

UNITED STATES PATENT AND TRADEMARK OFFICE

Commissioner for Patents
United States Patent and Trademark Office
P.O. Box 1450
Alexandria, VA 22313-1450
www.uspto.gov

MAR 16 2011

TSIRCOU INTELLECTUAL PROPERTY LAW
655 Central Ave., 17th Floor
Glendale CA 91203

In re application of
Engel et al.
Application No. 12/410,393
Filed: March 24, 2009
For: FASTENING MECHANISM

: **DECISION ON REQUEST TO**
: **PARTICIPATE IN PATENT**
: **PROSECUTION HIGHWAY**
: **PROGRAM AND PETITION**
: **TO MAKE SPECIAL UNDER**
: **37 CFR 1.102(a)**

This is a decision on the request to participate in the Patent Prosecution Highway (PPH) program and the petition under 37 CFR 1.102(a), filed February 2, 2011 to make the above-identified application special.

The request and petition are **GRANTED**.

A grantable request to participate in the PPH program and petition to make special require:

(1) The U.S. application must disclose an eligible relationship to one or more PCT applications filed in the KIPO or USPTO;
(2) Applicant must submit a copy of the allowable/patentable claim(s) from the PCT application(s) latest international work product (the written opinion or the IPER) along with an English translation thereof and a statement that the English translation is accurate;
(3) All the claims in the U.S. application must sufficiently correspond or be amended to sufficiently correspond to the allowable/patentable claim(s) in the PCT application(s);
(4) Examination of the U.S. application has not begun;
(5) Applicant must submit a copy of the latest international work product from the PCT application containing the allowable/patentable claim(s) along with an English translation thereof and a statement that the English translation is accurate;
(6) Applicant must submit an IDS listing the documents cited by the PCT examiner in the international work product along with copies of documents except U.S. patents or U.S. patent application publications.

In light of the petition being properly submitted via EFS-Web as is required, the request to participate in the PPH program complies with the above requirements, the above-identified application has been accorded "special" status.

All other inquiries concerning the examination or status of the application should be directed to the Patent Application Information Retrieval (PAIR) system.

The application is being forwarded to the examiner for action on the merits commensurate with this decision as soon as any pre-exam processing has been completed.

Any inquiry regarding this decision should be directed to Mikado Buiz, Quality Assurance Specialist, at (571) 272-6578.

/ Mikado Buiz /

Mikado Buiz,
Quality Assurance Specialist
Technology Center 3600

MB/MB: 03/16/11

UNITED STATES PATENT AND TRADEMARK OFFICE

Commissioner for Patents
United States Patent and Trademark Office
P.O. Box 1450
Alexandria, VA 22313-1450
www.uspto.gov

PAUL, HASTINGS. JANOFSKY & WALKER, LLP
875 15TH STREET, NW
WASHINGTON, DC 20005

MAILED

MAR 21 2011

OFFICE OF PETITIONS

In re Application of :
Carl L. Silva, Jr., et al. :
Application No. 12/410,401 : DECISION ON PETITION
Filed: March 24, 2009 : TO WITHDRAW
Attorney Docket No. 74838.00003.UTL1 : FROM RECORD
:

This is a decision on the Request to Withdraw as attorney or agent of record under 37 C.F.R. § 1.36(b), filed January 21, 2011.

The request is **APPROVED**.

A grantable request to withdraw as attorney/agent of record must be signed by every attorney/agent seeking to withdraw or contain a clear indication that one attorney is signing on behalf of another/others.

The request was signed by Todd M. Schneider on behalf of all attorneys of record who are associated with customer No. 36183All attorneys/agents associated with the Customer Number 36183 have been withdrawn. Applicant is reminded that there is no attorney of record at this time.

The correspondence address of record has been changed and the new correspondence address is the address indicated below.

There are no pending Office actions at the present time.

Telephone inquiries concerning this decision should be directed to undersigned at 571-272-1642. All other inquiries concerning the examination or status of this application should be directed to the Technology Center.

/AMW/
April M. Wise
Petitions Examiner
Office of Petitions

cc: NEXAIRA, INC.
6650 LISK BLVD
SUITE B-203
SAN DIEGO, CA 92121

UNITED STATES PATENT AND TRADEMARK OFFICE

UNITED STATES DEPARTMENT OF COMMERCE
United States Patent and Trademark Office
Address: COMMISSIONER FOR PATENTS
P.O. Box 1450
Alexandria, Virginia 22313-1450
www.uspto.gov

APPLICATION NUMBER	FILING OR 371(C) DATE	FIRST NAMED APPLICANT	ATTY. DOCKET NO./TITLE
12/410,401	03/24/2009	Carl L. Silva JR.	74838.00003.UTL1

CONFIRMATION NO. 3123

POWER OF ATTORNEY NOTICE

36183
PAUL, HASTINGS, JANOFSKY & WALKER LLP
875 15th Street, NW
Washington, DC 20005

Date Mailed: 02/28/2011

NOTICE REGARDING CHANGE OF POWER OF ATTORNEY

This is in response to the Power of Attorney filed 01/21/2011.

- The withdrawal as attorney in this application has been accepted. Future correspondence will be mailed to the new address of record. 37 CFR 1.33.

/amwise/

Office of Data Management, Application Assistance Unit (571) 272-4000, or (571) 272-4200, or 1-888-786-0101

UNITED STATES PATENT AND TRADEMARK OFFICE

Commissioner for Patents
United States Patent and Trademark Office
P.O. Box 1450
Alexandria, VA 22313-1450
www.uspto.gov

Ashok Tankha
36 Greenleigh Drive
Sewell NJ 08080

MAILED
JAN 18 2012
OFFICE OF PETITIONS

In re Application of :
Goyal :
Application No. 12/410,465 : NOTICE
Filed: March 25, 2009 :
Attorney Docket No. KETERA_05 :

This is a notice regarding your request for acceptance of a fee deficiency submission under 37 CFR 1.28(c), filed December 19, 2011.

The Office no longer investigates or rejects original or reissue patent under 37 CFR 1.56. **1098 Off. Gaz. Pat. Office 502 (January 3, 1989)**. Therefore, nothing in this Notice is intended to imply that an investigation was done.

Your fee deficiency submission under 37 CFR 1.28 is hereby **ACCEPTED**.

This patent is no longer entitled to small entity status. Accordingly, all future fees paid in this patent must be paid at the large entity rate.

Inquiries related to this communication should be directed to the undersigned at (571) 272-3230.

Shirene Willis Brantley
Senior Petitions Attorney
Office of Petitions

UNITED STATES PATENT AND TRADEMARK OFFICE

UNITED STATES DEPARTMENT OF COMMERCE
United States Patent and Trademark Office
Address: COMMISSIONER FOR PATENTS
P.O. Box 1450
Alexandria, Virginia 22313-1450
www.uspto.gov

APPLICATION NO.	FILING DATE	FIRST NAMED INVENTOR	ATTORNEY DOCKET NO.	CONFIRMATION NO.
12/410,606	03/25/2009	Masahiro OGAWA	09207/LH	3556

1933 7590 10/27/2010

HOLTZ, HOLTZ, GOODMAN & CHICK PC
220 Fifth Avenue
16TH Floor
NEW YORK, NY 10001-7708

EXAMINER	
EPPS, GEORGIA Y	
ART UNIT	PAPER NUMBER
2878	

MAIL DATE	DELIVERY MODE
10/27/2010	PAPER

Please find below and/or attached an Office communication concerning this application or proceeding.

The time period for reply, if any, is set in the attached communication.

UNITED STATES PATENT AND TRADEMARK OFFICE

Commissioner for Patents
United States Patent and Trademark Office
P.O. Box 1450
Alexandria, VA 22313-1450
www.uspto.gov

HOLTZ, HOLTZ, GOODMAN & CHICK PC
220 Fifth Avenue
16TH Floor
NEW YORK NY 10001-7708

In re Application of
OGAWA et al.
Application No.: 12/410,606
Filed: 25 March 2009
Attorney Docket No.: 09207/LH
For: COLOR WHEEL HAVING A PLURALITY OF SEGMENTS AND PROJECTOR EMPLOYING THE SAME

: DECISION ON REQUEST TO
: PARTICIPATE IN THE PATENT
: PROSECUTION HIGHWAY
: PROGRAM AND PETITION
: TO MAKE SPECIAL UNDER
: 37 CFR 1.102(d)

This is a decision on the request to participate in 02 September 2010, to make the above-identified application special.

The request and petition are **DISMISSED**.

A grantable request to participate in the PPH program and petition to make special require:

1. The U.S. application must validly claim priority under 35 U.S.C. 119(a) to one or more applications filed in the JPO, note where the JPO application with similar claims is not the same application from which the U.S. application claims priority that the applicant must identify the relationship between the JPO application with similar claims and the JPO priority application;

2. Applicant must submit a copy of:
   a. The allowable/patentable claim(s) from the JPO application(s) or if a copy of the allowable/patentable claims is available via the Dossier Access System (DAS) applicant may request the USPTO obtain a copy from the DAS, however if the USPTO is unable to obtain a copy from the DAS the applicant will be required to submit a copy;
   b. An English translation of the allowable/patentable claim(s) and
   c. A statement that the English translation is accurate;

3. Applicant must
   a. Ensure all the claims in the U.S. application must sufficiently correspond or be amended to sufficiently correspond to the allowable/patentable claim(s) in the JPO application(s) and

b. Submit a claims correspondence table in English;

4. Examination of the U.S. application has not begun;

5. Applicant must submit:
   a. Documentation of prior office action:
      i. a copy of the office action(s) just prior to the "Decision to Grant a Patent" from each of the JPO application(s) containing the allowable/patentable claim(s) or
      ii. if the allowable/patentable claims(s) are from a "Notification of Reasons for Refusal" then the Notification of Reasons for Refusal or
      iii. if the JPO application is a first action allowance then no office action from the JPO is necessary should be indicated on the request/petition form;

      Further, if a copy of the documents from a or b above is available via the Dossier Access System (DAS) applicant may request the USPTO obtain a copy from the DAS, however if the USPTO is unable to obtain a copy from the DAS the applicant will be required to submit a copy;
   b. An English language translation of the JPO Office action from (5)(a)(i)-(ii) above
   c. A statement that the English translation is accurate;

6. Applicant must submit:
   a. An IDS listing the documents cited by the JPO examiner in the JPO office action (unless already submitted in this application)
   b. Copies of the documents except U.S. patents or U.S. patent application publications (unless already submitted in this application);

Conditions (1-5) above are considered to have been met. However, the request to participate in the PPH pilot program and petition fails meet condition (6).

Regarding the requirement of condition (6), applicant failed to submit an IDS listing all the prior art cited by the JPO examiner and copies thereof. Specifically, applicant failed to cite and provide copies of JP 07-184215 A, JP 2003~307609 A, JP 2004-361833 A, JP 2005°274656 A, and JP 2004~279900 A.

Applicant is given **ONE** opportunity within a time period of **ONE MONTH or THIRTY DAYS**, whichever is longer, from the mailing date of this decision to correct the deficiencies. **NO EXTENSION OF TIME UNDER 37 CFR 1.136 IS PERMITTED.** If the deficiencies are not corrected with the time period given, the application will await action in its regular turn.

Response must be filed via the Electronic Filing System (EFS) using the document description: Petition to make special under Patent Pros Hwy. Any preliminary amendments and IDS submitted with the PPH documents must be separately indexed as a preliminary amendment and IDS, respectively.

Telephone inquiries concerning this decision should be directed to Lee W. Young at 571-272-4549.

All other inquiries concerning the examination or status of the application is accessible in the PAIR system at http://www.uspto.gov/ebc/index.html.

Lee W. Young
TQAS Technology Center 2800

UNITED STATES PATENT AND TRADEMARK OFFICE

UNITED STATES DEPARTMENT OF COMMERCE
United States Patent and Trademark Office
Address: COMMISSIONER FOR PATENTS
P.O. Box 1450
Alexandria, Virginia 22313-1450
www.uspto.gov

APPLICATION NO.	FILING DATE	FIRST NAMED INVENTOR	ATTORNEY DOCKET NO.	CONFIRMATION NO.
12/410,606	03/25/2009	Masahiro OGAWA	09207/LH	3556

1933 7590 11/30/2010

HOLTZ, HOLTZ, GOODMAN & CHICK PC
220 Fifth Avenue
16TH Floor
NEW YORK, NY 10001-7708

EXAMINER	
CRUZ, MAGDA	
ART UNIT	**PAPER NUMBER**
2878	

MAIL DATE	DELIVERY MODE
11/30/2010	PAPER

Please find below and/or attached an Office communication concerning this application or proceeding.

The time period for reply, if any, is set in the attached communication.

UNITED STATES PATENT AND TRADEMARK OFFICE

Commissioner for Patents
United States Patent and Trademark Office
P.O. Box 1450
Alexandria, VA 22313-1450
www.uspto.gov

HOLTZ, HOLTZ, GOODMAN & CHICK PC
220 Fifth Avenue
16TH Floor
NEW YORK NY 10001-7708

In re Application of
Masahiro OGAWA
Application No.: 12/410,606
Filed: 25 March 2009
Attorney Docket No.: 09207/LH
For: COLOR WHEEL HAVING A PLURALITY OF SEGMENTS AND PROJECTOR EMPLOYING THE SAME

: DECISION ON REQUEST TO
: PARTICIPATE IN THE PATENT
: PROSECUTION HIGHWAY
: PROGRAM AND PETITION
: TO MAKE SPECIAL UNDER
: 37 CFR 1.102(d)

This is a decision on the request to participate in 02 September 2010 and renewed on 19 November 2010, to make the above-identified application special.

The request and petition are **GRANTED**.

Discussion

A grantable request to participate in the PPH pilot program and petition to make special require:

1. The U.S. application is
    a. a Paris Convention application which either
        i. validly claims priority under 35 U.S.C. 119(a) and 37 CFR 1.55 to one or more applications filed in the JPO, or
        ii. validly claims priority to a PCT application that contains no priority claims, or
    b. a national stage application under the PCT (an application which entered the national stage in the U.S. from a PCT international application after compliance with 35 U.S.C. 371), which PCT application
        i. validly claims priority to an application filed in the JPO, or
        ii. validly claims priority to a PCT application that contains no priority claims, or
        iii. contains no priority claim, or
    c. a so-called bypass application filed under 35 U.S.C. 111(a) which validly claims benefit under 35 U.S.C. 120 to a PCT application, which PCT application
        i. validly claims priority to an application filed in the JPO, or

ii. validly claims priority to a PCT application that contains no priority claims, or
iii. contains no priority claim;

2. Applicant must submit a copy of:
   a. The allowable/patentable claim(s) from the JPO application(s);
   b. An English translation of the allowable/patentable claim(s) and
   c. A statement that the English translation is accurate;
3. Applicant must:
   a. Ensure all the claims in the U.S. application must sufficiently correspond or be amended to sufficiently correspond to the allowable/patentable claim(s) in the JPO application(s) and
   b. Submit a claims correspondence table in English;
4. Examination of the U.S. application has not begun;
5. Applicant must submit:
   a. Documentation of prior office action:
      i. a copy of the office action(s) just prior to the "Decision to Grant a Patent" from each of the JPO application(s) containing the allowable/patentable claim(s) or
      ii. if the allowable/patentable claims(s) are from a "Notification of Reasons for Refusal" then the Notification of Reasons for Refusal or
      iii. if the JPO application is a first action allowance then no office action from the JPO is necessary should be indicated on the request/petition form;
   b. An English language translation of the JPO Office action from (5)(a)(i)-(ii) above
   c. A statement that the English translation is accurate;
6. Applicant must submit:
   a. An IDS listing the documents cited by the JPO examiner in the JPO office action (unless already submitted in this application)
   b. Copies of the documents except U.S. patents or U.S. patent application publications (unless already submitted in this application);

The request to participate in the PPH pilot program and petition comply with the above requirements. Accordingly, the above-identified application has been accorded "special" status.

Inquiries concerning this decision should be directed to Lee W. Young at 571-272-4549.

All other inquiries concerning the examination or status of the application is accessible in the PAIR system at http://www.uspto.gov/ebc.index.html.

This application will be forwarded to the examiner for action on the merits commensurate with this decision.

Lee W. Young
TQAS
Technology Center 2800

UNITED STATES PATENT AND TRADEMARK OFFICE

UNITED STATES DEPARTMENT OF COMMERCE
United States Patent and Trademark Office
Address: COMMISSIONER FOR PATENTS
P.O. Box 1450
Alexandria, Virginia 22313-1450
www.uspto.gov

APPLICATION NO.	FILING DATE	FIRST NAMED INVENTOR	ATTORNEY DOCKET NO.	CONFIRMATION NO.
12/410,626	03/25/2009	Tsutomu Terazaki	08744/LH	3592

1933 7590 04/01/2011

HOLTZ, HOLTZ, GOODMAN & CHICK PC
220 Fifth Avenue
16TH Floor
NEW YORK, NY 10001-7708

EXAMINER	
DOVE, TRACY MAE	

ART UNIT	PAPER NUMBER
1726	

MAIL DATE	DELIVERY MODE
04/01/2011	PAPER

Please find below and/or attached an Office communication concerning this application or proceeding.

The time period for reply, if any, is set in the attached communication.

UNITED STATES PATENT AND TRADEMARK OFFICE

Commissioner for Patents
United States Patent and Trademark Office
P.O. Box 1450
Alexandria, VA 22313-1450
www.uspto.gov

APR - 1 2011

CST

In re application of	:	DECISION ON REQUEST TO
Tsutomu Terazaki et al	:	PARTICIPATE IN PATENT
Serial No. 12/410,626	:	PROSECUTION HIGHWAY
Filed: March 25, 2009	:	PROGRAM AND
For: REACTION DEVICE AND	:	PETITION TO MAKE SPECIAL
ELECTRONIC EQUIPMENT	:	UNDER 37 CFR 1.102(a)

This is a decision on the request to participate in the Patent Prosecution Highway (PPH) program filed February 18, 2011.

The request and petition are **GRANTED**.

A grantable request to participate in the PPH program and petition to make special require:

(1) The U.S. application must validly claim priority under 35 U.S.C. 119(a) to one or more applications filed in the JPO, note where the JPO application with similar claims is not the same application from which the U.S. application claims priority that the applicant must identify the relationship between the JPO application with similar claims and the JPO priority application;

(2) Applicant must submit a copy of:
a. The allowable/patentable claim(s) from the JPO application(s) or if a copy of the allowable/patentable claims is available via the Dossier Access System (DAS) applicant may request the USPTO to obtain a copy from DAS; however, if the USPTO is unable to obtain a copy from the DAS, the applicant will be required to submit a copy;
b. An English translation of the allowable/ patentable claim(s), if applicable; and
c. A statement that the English translation is accurate, if applicable;

(3) Applicant must:
a. Ensure all the claims in the U.S. application must sufficiently correspond or be amended to sufficiently correspond to the allowable/patentable claim(s) in the JPO application(s); and
b. Submit a claims correspondence table in English;

(4) Examination of the U.S. application has not begun;

(5) Applicant must submit:
- a. Documentation of prior office action:
  - i. a copy of the office action(s) just prior to the "Decision to Grant a Patent" from each of the JPO application(s) containing the allowable/patentable claims(s) or
  - ii. if the allowable/patentable claim(s) are from "Notification of Reasons for Refusal" then the Notification of Reasons for Refusal or
  - iii. if the JPO application is a first action allowance then no office action from the JPO is necessary should be indicated on the request/petition form: Further, if a copy of the documents from a or b is available via the Dossier Access System (DAS), applicant may request the USPO obtain a copy from the DAS; however, if the USPTO is unable to obtain a copy of the DAS, the applicant will be required to submit a copy;
- b. An English language translation of the JPO Office action from (5)(a)(i)-(ii) above if applicable; and
- c. A statement that the English translation is accurate; and

(6) Applicant must submit:
- a. An IDS listing the documents cited by the JPO examiner in the JPO office action (unless already submitted in this application)
- b. Copies of documents except U.S. patents or U.S. patent application publications (unless already submitted in this application).

The request to participate in the PPH program and petition comply with the above requirements. Accordingly, the above-identified application has been accorded "special" status.

The application is being forwarded to the examiner for action on the merits commensurate with this decision.

Any inquiry regarding this decision should be directed to Christine Tierney, Quality Assurance Specialist, at (571) 272-1055.

All other inquiries concerning the examination or status of the application is accessible in the PAIR system at http://www.uspto.gov/ebc/index.html.

/Christine Tierney/

Christine Tierney
Quality Assurance Specialist
Technology Center 1700

UNITED STATES PATENT AND TRADEMARK OFFICE

Commissioner for Patents
United States Patent and Trademark Office
P.O. Box 1450
Alexandria, VA 22313-1450
www.uspto.gov

BANNER & WITCOFF, LTD.
1100 13th STREET, N.W.
SUITE 1200
WASHINGTON DC 20005-4051

MAILED
MAY 10 2011
OFFICE OF PETITIONS

In re Application of	:	
Gunter G. FUSS et al.	:	
Application No. 12/410,705	:	ON PETITION
Filed: March 25, 2009	:	
Attorney Docket No. 006759.00121	:	

This is a decision on the petition under 37 CFR 1.181, filed December 28, 2010, requesting entry of the terminal disclaimer filed February 19, 2010.

The petition is **GRANTED**.

Petitioner asserts that on February 19, 2010, a terminal disclaimer identifying Free-Flow Packaging International, Inc as 100% owner was filed with the USPTO. Entry of the terminal disclaimer was subsequently not approved as the owner/assignee on the terminal disclaimer was inconsistent with USPTO assignment records. However, as set forth in MPEP 306, [i]n the case of a division or continuation application, a prior assignment recorded against the original application is applied (effective) to the division or continuation application because the assignment recorded against the original application gives the assignee rights to the subject matter common to both applications. As the above-identified application is a division of 11/867,032, which is a continuation of 10/843,904, which is a division of 09/765,064, and 09/765,064 has been assigned to Free-Flow Packaging International, Inc. as 100% owner, the terminal disclaimer filed February 19, 2010 is approved and entered.

Telephone inquiries concerning this decision should be directed to David A. Bucci at (571) 272-7099.

The application file is being referred to Technology Center AU 3721 for appropriate processing commensurate with this decision.

David Bucci
Petitions Examiner
Office of Petitions

PATENT

First Named Inventor: David A. Maltz
Application No.: 12/410,745
Filed: March 25, 2009
Customer No.: 47766
Confirmation Number: 3836

Attorney Docket No.: MSFT-01242US1
Group Art Unit: 2465
Examiner: PATEL, JAYANTI K
Quality Assurance Specialist: Hassan Kizou

Title: DATA CENTER INTERCONNECT AND TRAFFIC ENGINEERING

Commissioner for Patents
P.O. Box 1460
Alexandria, VA 22313-1450

Statement on Decision to Request Participation in the PCT-Patent Prosecution Highway Pilot Program

Dear Sir:

Applicants acknowledge the dismissal of our request to participate in the PCT – Patent Prosecution Highway program due to item (6), in which the applicant must submit a copy of the claims from the corresponding PCT application or a statement that the claims in the US application are identical to the claims from the corresponding PCT application. In response, applicants state that the claims in the PCT application are identical to the claims in the US application. The only formatting difference is that the claims in the PCT application contain numerical references that refer to the drawings. For your convenience, however, a copy of the claims in the PCT application is also included.

Accordingly, applicants respectfully request the petition to participate in the PCT – Patent Prosecution Highway Pilot Program be granted. If you have any questions, please do not hesitate to call the Applicant's attorney at the telephone number listed below.

Respectfully submitted,

Date: August 27, 2010

By:/James R. Banowsky/
Atty: James R. Banowsky
Reg. No.: 37,773
Direct telephone: (425) 705-3539
Microsoft Corporation
One Microsoft Way
Redmond WA 98052-6399

CERTIFICATE OF MAILING OR TRANSMISSION
(Under 37 CFR § 1.8(a)) or ELECTRONIC FILING

I hereby certify that this correspondence is being electronically deposited with the USPTO via EFS-Web on the date shown below:

August 27, 2010
Date

/Eric Matt/
Eric Matt

UNITED STATES PATENT AND TRADEMARK OFFICE

UNITED STATES DEPARTMENT OF COMMERCE
United States Patent and Trademark Office
Address: COMMISSIONER FOR PATENTS
P.O. Box 1450
Alexandria, Virginia 22313-1450
www.uspto.gov

APPLICATION NO.	FILING DATE	FIRST NAMED INVENTOR	ATTORNEY DOCKET NO.	CONFIRMATION NO.
12/410,745	03/25/2009	David A. Maltz	MSFT-01242US1/324353PPH	3836

47766 7590 09/03/2010

VIERRA MAGEN/MICROSOFT CORPORATION
575 MARKET STREET, SUITE 2500
SAN FRANCISCO, CA 94105

EXAMINER	
PATEL, JAYANTI K	

ART UNIT	PAPER NUMBER
2465	

MAIL DATE	DELIVERY MODE
09/03/2010	PAPER

Please find below and/or attached an Office communication concerning this application or proceeding.

The time period for reply, if any, is set in the attached communication.

MAILED

SEP 03 2010

DIRECTOR OFFICE
TECHNOLOGY CENTER 2400

UNITED STATES PATENT AND TRADEMARK OFFICE

Commissioner for Patents
United States Patent and Trademark Office
P.O. Box 1450
Alexandria, VA 22313-1450
www.uspto.gov

VIERRA MAGEN/MICROSOFT CORPORATION
575 MARKET STREET, SUITE 2500
SAN FRANCISCO CA 94105

In re Application of: MALTZ, DAVID et al.
Application No. 12410745
Filed: March 25, 2009
For: DATA CENTER INTERCONNECT AND TRAFFIC ENGINEERING

DECISION ON REQUEST TO PARTICIPATE IN PATENT PROSECUTION HIGHWAY PROGRAM AND PETITION TO MAKE SPECIAL UNDER 37 CFR 1.102(d)

This is a decision on the request to participate in the PCT- Patent Prosecution Highway (PPH) pilot program and the petition under 37 CFR 1.102(d), filed July 6, 2010 and renewed August 27, 2010, to make the above-identified application special.

The petition is **GRANTED.**

A grantable request to participate in the PCT PPH program and petition to make special require:

(1) The relationship between the corresponding U.S. application for which participation in the PCT-PPH pilot program is requested and the PCT application satisfies one of the following:

(a) The U.S. application is a national stage entry of the corresponding PCT application.

(b)The U.S. application is a national application which forms the basis for the priority claim in the corresponding PCT application.

(c) The U.S. application is a national stage entry of another PCT application (which can be filed in any competent receiving office) which claims priority to the corresponding PCT application.

(d) The U.S. application is a national application claiming foreign/domestic priority to the corresponding PCT application.

(e) The U.S. application is a continuing application (continuation, divisional, or continuation-in-part) of the U.S. application which satisfies one of the above (a) to (d) scenarios.

(2) The latest work product in the international phase of the PCT application corresponding to the U.S. application indicates at least one claim in the PCT application has novelty, inventive step and industrial applicability. In case any observation is described in Box VIII of the WO/ISA, or WO/IPEA, or IPER which forms the basis for the PCT-PPH request, applicant must identify and explain why the claim(s) is/are not subject to any observation described in Box VIII irrespective of whether an amendment is submitted to correct the observation described in Box VIII.

(3) All the claims in each U.S. application for which a request for participation in the PCT-PPH pilot program is made must sufficiently correspond to or be mended to sufficiently correspond to one or more of those claims indicated as having novelty, inventive step and industrial applicability and free of any observation described in Box VIII in the latest work product of the corresponding PCT application.

(4) Substantive examination of the U.S. application for which participation in the PCT-PPH pilot program is requested has not begun.

(5) Applicant must submit a copy of the latest international work product which indicated that the claim(s) has/have novelty, inventive step and industrial applicability along with an English translation thereof if the copy of the latest international work product is not in the English language.

(6) Applicant must submit a copy of the claims from the corresponding PCT application which were indicated as having novelty, inventive step and industrial applicability in the latest work product of the PCT application along with an English translation thereof and a statement that the English translation is accurate if the claims are not in the English language. Applicant is required to submit a claims correspondence table in English. The claims correspondence table must indicate how all the claims in the U.S. application sufficiently correspond to the claims indicated as having novelty, inventive step and industrial applicability in the latest international work product.

(7) Applicant must submit an information disclosure statement (IDS) listing the documents cited in the international work products (ISR, WOIISA, WOIIPEA, PER) of the PCT.

(8) The request for participation in the PCT-PPH pilot program and all the supporting documents must be submitted to the USPTO via EFS-Web and indexed with the following document description: "Petition to make special under PCT-Patent Pros Hwy. Any preliminary amendments and IDS submitted with the PCT-PPH documents must be separately indexed as a preliminary amendment and IDS, respectively.

The request to participate in the PCT-PPH program and petition was previously dismissed for failing to meet the requirement of item **(6)** above. The renewed request has addressed this deficiency. The request to participate in the PCT-PPH program and petition are now found to comply with all the above requirements. Accordingly, the above-identified application has been accorded "special" status.

Telephone inquiries concerning this decision should be directed to Hassan Kizou at 571-272-3088

All other inquiries concerning the examination or status of the application is accessible in the PAIR system at http://www.uspto.gov/ebc/index.html.

The application is being forwarded to the examiner for action on the merits commensurate with this decision

/Hassan Kizou/

Hassan Kizou
Quality Assurance Specialist
Technology Center 2400

UNITED STATES PATENT AND TRADEMARK OFFICE

UNITED STATES DEPARTMENT OF COMMERCE
United States Patent and Trademark Office
Address: COMMISSIONER FOR PATENTS
P.O. Box 1450
Alexandria, Virginia 22313-1450
www.uspto.gov

APPLICATION NO.	FILING DATE	FIRST NAMED INVENTOR	ATTORNEY DOCKET NO.	CONFIRMATION NO.
12/410,816	03/25/2009	Tomonori MASUDA	2091-0498PUS1	3973

2292 7590 06/09/2011
BIRCH STEWART KOLASCH & BIRCH
PO BOX 747
FALLS CHURCH, VA 22040-0747

EXAMINER	
DOLLINGER, TONIA LYNN MEONSKE	
ART UNIT	PAPER NUMBER
2443	

NOTIFICATION DATE	DELIVERY MODE
06/09/2011	ELECTRONIC

Please find below and/or attached an Office communication concerning this application or proceeding.

The time period for reply, if any, is set in the attached communication.

Notice of the Office communication was sent electronically on above-indicated "Notification Date" to the following e-mail address(es):

mailroom@bskb.com

UNITED STATES PATENT AND TRADEMARK OFFICE

Commissioner for Patents
United States Patent and Trademark Office
P.O. Box 1450
Alexandria, VA 22313-1450
www.uspto.gov

BIRCH STEWART KOLASCH & BIRCH
PO BOX 747
FALLS CHURCH VA 22040-0747

In re Application of: MASUDA et al.
Application No. 12/410816
Filed: March 24, 2009
For: METHOD, APPARATUS, AND PROGRAM FOR PROCESSING STEREOSCOPIC VIDEOS

DECISION ON REQUEST TO PARTICIPATE IN PATENT PROSECUTION HIGHWAY PILOT PROGRAM AND PETITION TO MAKE SPECIAL UNDER 37 CFR 1.102(d)

This is a decision on the request to participate in the Patent Prosecution Highway (PPH) program and the petition under 37 CFR 1.102(d), filed Feb 24, 2011, to make the above-identified application special.

The request and petition are **GRANTED**.

A grantable request to participate in the PPH program and petition to make special require:

(1) The U.S. application is
(a) a Paris Convention application which either
(i) validly claims priority under 35 U.S.C. 119(a) and 37 CFR 1.55 to one or more applications filed in the JPO, or
(ii) validly claims priority to a PCT application that contains no priority claims,

Or

(b) a national stage application under the PCT (an application which entered the national stage in the U.S. from a PCT international application after compliance with 35 U.S.C. 371), which PCT application
(i) validly claims priority to an application filed in the JPO, or
(ii) validly claims priority to a PCT application that contains no priority claims, or
(iii) contains no priority claim,

Or

(c) a so-called bypass application filed under 35 U.S.C. 111 (a) which validly claims benefit under 35 U.S.C. 120 to a PCT application, which PCT application
(i) validly claims priority to an application filed in the JPO, or

(ii) validly claims priority to a PCT application that contains no priority claims, or
(iii) contains no priority claim.

Where the JPO application that contains the allowable/patentable claims is not the same application for which priority is claimed in the U.S. application, applicant must identify the relationship between the JPO application that contains the allowable/patentable claims and the JPO priority application claimed in the U.S. application.

(2) Applicant must submit a copy of:
a. The allowable/patentable claim(s) from the JPO application(s) or if a copy of the allowable/patentable claims is available via the Dossier Access System (DAS) applicant may request the USPTO obtain a copy from the DAS, however if the USPTO is unable to obtain a copy from the DAS the applicant will be required to submit a copy;
b. An English translation of the allowable/patentable claim(s) and
c. A statement that the English translation is accurate;

(3) Applicant must:
a. Ensure all the claims in the U.S. application must sufficiently correspond or be amended to sufficiently correspond to the allowable/patentable claim(s) in the JPO application(s) and
b. Submit a claims correspondence table in English;

(4) Examination of the U.S. application has not begun;

(5) Applicant must submit:
a. Documentation of prior office action:
i. a copy of the office action(s)just prior to the "Decision to Grant a Patent" from each of the JPO application(s) containing the allowable/patentable claim(s) or
ii. if the identification of allowable/patentable claims(s) are from a "Notification of Reasons for Refusal" then the Notification of Reasons for Refusal or
iii. if the JPO application is a first action allowance then applicant should indicate no office action from the JPO is necessary on the request/petition form;

b. An English language translation of the JPO Office action from (5)(a)(i)-(ii) above
c. A statement that the English translation is accurate;

(6) Applicant must submit:
a. An IDS listing the documents cited by the JPO examiner in the JPO office action (unless already submitted in this application)
b. Copies of the documents except U.S. patents or U.S. patent application publications (unless already submitted in this application);

The request to participate in the PPH pilot program and petition are found to comply with the above requirements. Accordingly, the above-identified application has been accorded "special" status.

Telephone inquiries concerning this decision should be directed to Kim Huynh at 571-272-4147.

All other inquiries concerning the examination or status of the application is accessible in the PAIR system at http://www.uspto.gov/ebc/index.html.

/Kim Huynh/

Kim Huynh
Quality Assurance Specialist
Technology Center 2400

UNITED STATES PATENT AND TRADEMARK OFFICE

Commissioner for Patents
United States Patent and Trademark Office
P.O. Box 1450
Alexandria, VA 22313-1450
www.uspto.gov

E I DU PONT DE NEMOURS AND COMPANY
LEGAL PATENT RECORDS CENTER
BARLEY MILL PLAZA 25/1122B
4417 LANCASTER PIKE
WILMINGTON DE 19805

MAILED

OCT 12 2010

OFFICE OF PETITIONS

In re Application of	:	
Kolosov et al.	:	
Application No. 12/410,890	:	DECISION ON PETITION
Filed: March 25, 2009	:	
Attorney Docket No. UC0715USNA	:	

This is a decision on the petition under the unintentional provisions of 37 CFR 1.137(b), filed April 1, 2010, to revive the above-identified application.

The petition is **GRANTED**.

The above-identified application became abandoned for failure to reply in a timely manner to the Notice to File Missing Parts of Nonprovisional Application (Notice) mailed April 8, 2009. The Notice set a period for reply of two (2) months from the mail date of the Notice. No extensions of time under the provisions of 37 CFR 1.136(a) were obtained. Accordingly, the above-identified application became abandoned on June 9, 2009. A Notice of Abandonment was mailed on December 15, 2009.

The petition satisfies the requirements of 37 CFR 1.137(b) in that petitioner has supplied (1) an Oath or Declaration and the $130.00 Surcharge fee; (2) the petition fee of $1,620.00, and (3) a proper statement of unintentional delay.

Telephone inquiries concerning this decision should be directed to the undersigned at (571) 272-7751.

This application is being referred to the Office of Patent Application Processing for further processing in accordance with this decision on petition.

Joan Olszewski
Petitions Examiner
Office of Petitions

UNITED STATES PATENT AND TRADEMARK OFFICE

Commissioner for Patents
United States Patent and Trademark Office
P.O. Box 1450
Alexandria, VA 22313-1450
www.uspto.gov

GENERAL ELECTRIC COMPANY
GLOBAL RESEARCH
ONE RESEARCH CIRCLE
BLDG. K1-3A59
NISKAYUNA NY 12309

MAILED
NOV 07 2011
OFFICE OF PETITIONS

In re Application of :
Buckley et al. :
Application No. 12/410,916 : DECISION ON PETITION
Filed: March 25, 2009 : UNDER 37 CFR 1.78(a)(3)
Attorney Docket No. 230934-1 :

This is a decision on the petition under 37 CFR 1.78(a)(3), filed October 25, 2011, to accept an unintentionally delayed claim under 35 U.S.C. § 120 for the benefit of priority to the prior-filed nonprovisional application set forth in the amendment filed with the petition.

The petition is **GRANTED**.

A petition for acceptance of a claim for late priority under 37 CFR 1.78(a)(3) is only applicable to those applications filed on or after November 29, 2000. Further, the petition is appropriate only after the expiration of the period specified in 37 CFR 1.78(a)(2)(ii). In addition, the petition under 37 CFR 1.78(a)(3) must be accompanied by:

(1) the reference required by 35 U.S.C. § 120 and 37 CFR 1.78(a)(2)(i) of the prior-filed application, unless previously submitted;
(2) the surcharge set forth in § 1.17(t); and
(3) a statement that the entire delay between the date the claim was due under 37 CFR 1.78(a)(2)(ii) and the date the claim was filed was unintentional. The Director may require additional information where there is a question whether the delay was unintentional.

All of the above requirements having been satisfied, the late claim for priority under 35 U.S.C. § 120 is accepted as being unintentionally delayed.

The granting of the petition to accept the delayed benefit claim to the prior-filed application under 37 CFR 1.78(a)(3) should not be construed as meaning that this application is entitled to the benefit of the prior-filed application. In order for this application to be entitled to the

benefit of the prior-filed application, all other requirements under 35 U.S.C. § 120 and 37 CFR 1.78(a)(1) and (a)(2) must be met. Similarly, the fact that the corrected Filing Receipt accompanying this decision on petition includes the prior-filed application should not be construed as meaning that applicant is entitled to the claim for benefit of priority to the prior-filed application noted thereon. Accordingly, the examiner will, in due course, consider this benefit claim and determine whether the application is entitled to the benefit of the earlier filing date.

A corrected Filing Receipt, which includes the priority claim to the prior-filed nonprovisional application, accompanies this decision on petition.

Any inquiries concerning this decision may be directed to the undersigned at (571) 272-3230. All other inquiries concerning either the examination procedures or status of the application should be directed to the Technology Center.

This application is being forwarded to Technology Center Art Unit 3737 for consideration by the examiner of applicant's entitlement to claim benefit of priority under 35 U.S.C. § 120 to the prior-filed applications.

Shirene Willis Brantley
Senior Petitions Attorney
Office of Petitions

ATTACHMENT: Corrected Filing Receipt

UNITED STATES PATENT AND TRADEMARK OFFICE

UNITED STATES DEPARTMENT OF COMMERCE
United States Patent and Trademark Office
Address: COMMISSIONER FOR PATENTS
P.O. Box 1450
Alexandria, Virginia 22313-1450
www.uspto.gov

APPLICATION NUMBER	FILING or 371(c) DATE	GRP ART UNIT	FIL FEE REC'D	ATTY.DOCKET.NO	TOT CLAIMS	IND CLAIMS
12/410,916	03/25/2009	3737	1142	230934-1	21	3

CONFIRMATION NO. 4163

CORRECTED FILING RECEIPT

6147
GENERAL ELECTRIC COMPANY
GLOBAL RESEARCH
ONE RESEARCH CIRCLE
BLDG. K1-3A59
NISKAYUNA, NY 12309

Date Mailed: 11/07/2011

Receipt is acknowledged of this non-provisional patent application. The application will be taken up for examination in due course. Applicant will be notified as to the results of the examination. Any correspondence concerning the application must include the following identification information: the U.S. APPLICATION NUMBER, FILING DATE, NAME OF APPLICANT, and TITLE OF INVENTION. Fees transmitted by check or draft are subject to collection. Please verify the accuracy of the data presented on this receipt. **If an error is noted on this Filing Receipt, please submit a written request for a Filing Receipt Correction. Please provide a copy of this Filing Receipt with the changes noted thereon. If you received a "Notice to File Missing Parts" for this application, please submit any corrections to this Filing Receipt with your reply to the Notice. When the USPTO processes the reply to the Notice, the USPTO will generate another Filing Receipt incorporating the requested corrections**

Applicant(s)

Donald Joseph Buckley, Schenectady, NY;
Douglas Glenn Wildes, Ballston Lake, NY;
Warren Lee, Niskayuna, NY;
Weston Blaine Griffin, Niskayuna, NY;

Assignment For Published Patent Application

GENERAL ELECTRIC COMPANY, Schenectady, NY

Power of Attorney: The patent practitioners associated with Customer Number 006147

Domestic Priority data as claimed by applicant

This application is a CIP of 11/624,344 01/18/2007

Foreign Applications (You may be eligible to benefit from the **Patent Prosecution Highway** program at the USPTO. Please see http://www.uspto.gov for more information.)

Permission to Access - A proper **Authorization to Permit Access to Application by Participating Offices** (PTO/SB/39 or its equivalent) has been received by the USPTO.

If Required, Foreign Filing License Granted: 04/14/2009

The country code and number of your priority application, to be used for filing abroad under the Paris Convention, is **US 12/410,916**

Projected Publication Date: Not Applicable

Non-Publication Request: No

Early Publication Request: No

Title

ULTRASOUND CATHETER HOUSING WITH ELECTROMAGNETIC SHIELDING PROPERTIES AND METHODS OF MANUFACTURE

Preliminary Class

600

PROTECTING YOUR INVENTION OUTSIDE THE UNITED STATES

Since the rights granted by a U.S. patent extend only throughout the territory of the United States and have no effect in a foreign country, an inventor who wishes patent protection in another country must apply for a patent in a specific country or in regional patent offices. Applicants may wish to consider the filing of an international application under the Patent Cooperation Treaty (PCT). An international (PCT) application generally has the same effect as a regular national patent application in each PCT-member country. The PCT process **simplifies** the filing of patent applications on the same invention in member countries, but **does not result** in a grant of "an international patent" and does not eliminate the need of applicants to file additional documents and fees in countries where patent protection is desired.

Almost every country has its own patent law, and a person desiring a patent in a particular country must make an application for patent in that country in accordance with its particular laws. Since the laws of many countries differ in various respects from the patent law of the United States, applicants are advised to seek guidance from specific foreign countries to ensure that patent rights are not lost prematurely.

Applicants also are advised that in the case of inventions made in the United States, the Director of the USPTO must issue a license before applicants can apply for a patent in a foreign country. The filing of a U.S. patent application serves as a request for a foreign filing license. The application's filing receipt contains further information and guidance as to the status of applicant's license for foreign filing.

Applicants may wish to consult the USPTO booklet, "General Information Concerning Patents" (specifically, the section entitled "Treaties and Foreign Patents") for more information on timeframes and deadlines for filing foreign patent applications. The guide is available either by contacting the USPTO Contact Center at 800-786-9199, or it can be viewed on the USPTO website at http://www.uspto.gov/web/offices/pac/doc/general/index.html.

For information on preventing theft of your intellectual property (patents, trademarks and copyrights), you may wish to consult the U.S. Government website, http://www.stopfakes.gov. Part of a Department of Commerce initiative, this website includes self-help "toolkits" giving innovators guidance on how to protect intellectual property in specific countries such as China, Korea and Mexico. For questions regarding patent enforcement issues, applicants may call the U.S. Government hotline at 1-866-999-HALT (1-866-999-4158).

LICENSE FOR FOREIGN FILING UNDER

Title 35, United States Code, Section 184

Title 37, Code of Federal Regulations, 5.11 & 5.15

GRANTED

The applicant has been granted a license under 35 U.S.C. 184, if the phrase "IF REQUIRED, FOREIGN FILING LICENSE GRANTED" followed by a date appears on this form. Such licenses are issued in all applications where

the conditions for issuance of a license have been met, regardless of whether or not a license may be required as set forth in 37 CFR 5.15. The scope and limitations of this license are set forth in 37 CFR 5.15(a) unless an earlier license has been issued under 37 CFR 5.15(b). The license is subject to revocation upon written notification. The date indicated is the effective date of the license, unless an earlier license of similar scope has been granted under 37 CFR 5.13 or 5.14.

This license is to be retained by the licensee and may be used at any time on or after the effective date thereof unless it is revoked. This license is automatically transferred to any related applications(s) filed under 37 CFR 1.53(d). This license is not retroactive.

The grant of a license does not in any way lessen the responsibility of a licensee for the security of the subject matter as imposed by any Government contract or the provisions of existing laws relating to espionage and the national security or the export of technical data. Licensees should apprise themselves of current regulations especially with respect to certain countries, of other agencies, particularly the Office of Defense Trade Controls, Department of State (with respect to Arms, Munitions and Implements of War (22 CFR 121-128)); the Bureau of Industry and Security, Department of Commerce (15 CFR parts 730-774); the Office of Foreign AssetsControl, Department of Treasury (31 CFR Parts 500+) and the Department of Energy.

NOT GRANTED

No license under 35 U.S.C. 184 has been granted at this time, if the phrase "IF REQUIRED, FOREIGN FILING LICENSE GRANTED" DOES NOT appear on this form. Applicant may still petition for a license under 37 CFR 5.12, if a license is desired before the expiration of 6 months from the filing date of the application. If 6 months has lapsed from the filing date of this application and the licensee has not received any indication of a secrecy order under 35 U.S.C. 181, the licensee may foreign file the application pursuant to 37 CFR 5.15(b).

SelectUSA

The United States represents the largest, most dynamic marketplace in the world; an unparalleled location for innovation and commercialization of new technologies. Through SelectUSA, our nation works to encourage, facilitate, and accelerate business investment. Go to www.SelectUSA.gov for more information. Whether you choose to visit www.SelectUSA.gov will have no effect on the examination of your patent application.

SPE RESPONSE FOR CERTIFICATE OF CORRECTION

Paper No.: _____

DATE : 12/21/10

TO SPE OF : ART UNIT: 2819 Attn: BARNIE REXFORD N (SPE)

SUBJECT : Request for Certificate of Correction for Appl. No.: 12/410964 Patent No.: 7808415

CofC Mailroom date: 12/15/10

Please respond to this request for a certificate of correction within 7 days.

FOR IFW FILES:

Please review the requested changes/corrections as shown in the **COCIN** document(s) in the IFW application image. No new matter should be introduced, nor should the scope or meaning of the claims be changed.

Please complete the response (see below) and forward the completed response to scanning using document code **COCX**.

FOR PAPER FILES:

Please review the requested changes/corrections as shown in the attached certificate of correction. Please complete this form (see below) and forward it with the file to:

Certificates of Correction Branch (CofC)
Randolph Square – 9D10-A
Palm Location 7580

Tasneem Siddiqui
Certificates of Correction Branch
703-756-1593 or 703-756-1814

Thank You For Your Assistance

The request for issuing the above-identified correction(s) is hereby:
Note your decision on the appropriate box.

XApproved	**All** changes apply.
☐ **Approved in Part**	Specify below which changes **do not** apply.
☐ **Denied**	State the reasons for denial below.

Comments: _____

_____

_____

_____ _/Rexford

Barnie/_____

SPE **Art Unit**

2819

UNITED STATES PATENT AND TRADEMARK OFFICE

COMMISSIONER FOR PATENTS
UNITED STATES PATENT AND TRADEMARK OFFICE
P.O. BOX 1450
ALEXANDRIA, VA 22313-1450
www.uspto.gov

OBLON, SPIVAK, MCCLELLAND MAIER & NEUSTADT, L.L.P.
1940 DUKE STREET
ALEXANDRIA VA 22314

MAILED

MAR 17 2011

OFFICE OF PETITIONS

In re Application of :
Koshimizu, et al. :
Application No. 12/411,001 : DECISION ON PETITION
Filed: March 25, 2009 : UNDER 37 CFR 1.78(a)(6)
Attorney Docket No. 340324US26 :

This is a decision on the petition under 37 CFR 1.78(a)(6), filed February 25, 2011, to accept an unintentionally delayed claim under 35 U.S.C. §119(e) for the benefit of the prior-filed provisional application set forth in the concurrently filed amendment.

The petition is **GRANTED.**

A petition under 37 CFR 1.78(a)(6) is only applicable to those applications filed on or after November 29, 2000. Further, the petition is appropriate only after expiration of the period specified in 37 CFR 1.78(a)(5)(ii) and must be filed during the pendency of the nonprovisional application. In addition, the petition must be accompanied by:

(1) the reference required by 35 U.S.C. § 119(e) and 37 CFR 1.78(a)(5)(i) to the prior-filed application, unless previously submitted;
(2) the surcharge set forth in § 1.17(t); and
(3) a statement that the entire delay between the date the claim was due under 37 CFR 1.78(a)(5)(ii) and the date the claim was filed was unintentional. The Director may require additional information where there is a question whether the delay was unintentional.

Additionally, the instant nonprovisional application must be pending at the time of filing of the reference to the prior-filed provisional application as required by 37 CFR 1.78(a)(5)(ii). Further, the nonprovisional application claiming the benefit of the prior-filed provisional application must have been filed within twelve months of the filing date of the prior-filed provisional application.

37 CFR § 1.78(a)(6) requires a statement that the entire delay between the date the claim was due under 37 CFR § 1.78(a)(5)(ii) and the date the claim was filed was unintentional. Since the statement appearing in the petition varies from the required language, the statement is being construed as the statement required by 37 CFR §1.78(a)(6). If this is not a correct reading of the statement appearing in the petition, petitioner should promptly notify the Office.

All of the above requirements having been satisfied, the late claim for priority under 35 U.S.C. § 119(e) is accepted as being unintentionally delayed.

The granting of the petition to accept the delayed benefit claim to the prior-filed application under 37 CFR 1.78(a)(6) should not be construed as meaning that this application is entitled to the benefit of the filing date of the prior-filed application. In order for this application to be entitled to the benefit of the prior-filed application, all other requirements under 35 U.S.C. §119(e) and 37 CFR 1.78(a)(4) and (a)(5) must be met. Similarly, the fact that the corrected Filing Receipt accompanying this decision on petition includes the prior-filed application should not be construed as meaning that applicant is entitled to the claim for benefit of priority to the prior-filed application noted thereon. Accordingly, the examiner will, in due course, consider this benefit claim and determine whether the application is entitled to the benefit of the earlier filing date.

A corrected Filing Receipt, which includes the priority claim to the prior-filed provisional application, accompanies this decision on petition.

Any inquiries concerning this decision may be directed to Attorney Advisor Alesia M. Brown at (571) 272-3205. All other inquiries concerning either the examination procedures or status of the application should be directed to the Technology Center.

The application is being forwarded to Technology Center AU 1716 for consideration by the examiner of the claim under 35 U.S.C. §119(e) for the benefit of priority to the prior-filed provisional application.

Chris Bottorff
Supervisor
Office of Petitions

ATTACHMENT: Corrected Filing Receipt

UNITED STATES PATENT AND TRADEMARK OFFICE

UNITED STATES DEPARTMENT OF COMMERCE
United States Patent and Trademark Office
Address: COMMISSIONER FOR PATENTS
P.O. Box 1450
Alexandria, Virginia 22313-1450
www.uspto.gov

APPLICATION NUMBER	FILING or 371(c) DATE	GRP ART UNIT	FIL FEE REC'D	ATTY.DOCKET.NO	TOT CLAIMS	IND CLAIMS
12/411,001	03/25/2009	1716	1090	340324US26	20	3

CONFIRMATION NO. 4328

CORRECTED FILING RECEIPT

22850
OBLON, SPIVAK, MCCLELLAND MAIER & NEUSTADT, L.L.P.
1940 DUKE STREET
ALEXANDRIA, VA 22314

OC000000046538489

Date Mailed: 03/14/2011

Receipt is acknowledged of this non-provisional patent application. The application will be taken up for examination in due course. Applicant will be notified as to the results of the examination. Any correspondence concerning the application must include the following identification information: the U.S. APPLICATION NUMBER, FILING DATE, NAME OF APPLICANT, and TITLE OF INVENTION. Fees transmitted by check or draft are subject to collection. Please verify the accuracy of the data presented on this receipt. **If an error is noted on this Filing Receipt, please submit a written request for a Filing Receipt Correction. Please provide a copy of this Filing Receipt with the changes noted thereon. If you received a "Notice to File Missing Parts" for this application, please submit any corrections to this Filing Receipt with your reply to the Notice. When the USPTO processes the reply to the Notice, the USPTO will generate another Filing Receipt incorporating the requested corrections**

Applicant(s)

Chishio KOSHIMIZU, Nirasaki City, JAPAN;
Manabu IWATA, Nirasaki City, JAPAN;
Masanobu HONDA, Nirasaki City, JAPAN;
Hiroyuki NAKAYAMA, Nirasaki City, JAPAN;

Assignment For Published Patent Application

TOKYO ELECTRON LIMITED, Tokyo, JAPAN

Power of Attorney: The patent practitioners associated with Customer Number 22850

Domestic Priority data as claimed by applicant

This appln claims benefit of 61/109,963 10/31/2008

Foreign Applications (You may be eligible to benefit from the **Patent Prosecution Highway** program at the USPTO. Please see http://www.uspto.gov for more information.)
JAPAN 2008-086861 03/28/2008

Request to Retrieve - This application either claims priority to one or more applications filed in an intellectual property Office that participates in the Priority Document Exchange (PDX) program or contains a proper **Request to Retrieve Electronic Priority Application(s)** (PTO/SB/38 or its equivalent). Consequently, the USPTO will attempt to electronically retrieve these priority documents.

If Required, Foreign Filing License Granted: 04/03/2009

The country code and number of your priority application, to be used for filing abroad under the Paris Convention, is **US 12/411,001**

Projected Publication Date: Not Applicable

Non-Publication Request: No

Early Publication Request: No

Title

PLASMA ETCHING APPARATUS AND METHOD, AND COMPUTER-READABLE STORAGE MEDIUM

Preliminary Class

156

PROTECTING YOUR INVENTION OUTSIDE THE UNITED STATES

Since the rights granted by a U.S. patent extend only throughout the territory of the United States and have no effect in a foreign country, an inventor who wishes patent protection in another country must apply for a patent in a specific country or in regional patent offices. Applicants may wish to consider the filing of an international application under the Patent Cooperation Treaty (PCT). An international (PCT) application generally has the same effect as a regular national patent application in each PCT-member country. The PCT process **simplifies** the filing of patent applications on the same invention in member countries, but **does not result** in a grant of "an international patent" and does not eliminate the need of applicants to file additional documents and fees in countries where patent protection is desired.

Almost every country has its own patent law, and a person desiring a patent in a particular country must make an application for patent in that country in accordance with its particular laws. Since the laws of many countries differ in various respects from the patent law of the United States, applicants are advised to seek guidance from specific foreign countries to ensure that patent rights are not lost prematurely.

Applicants also are advised that in the case of inventions made in the United States, the Director of the USPTO must issue a license before applicants can apply for a patent in a foreign country. The filing of a U.S. patent application serves as a request for a foreign filing license. The application's filing receipt contains further information and guidance as to the status of applicant's license for foreign filing.

Applicants may wish to consult the USPTO booklet, "General Information Concerning Patents" (specifically, the section entitled "Treaties and Foreign Patents") for more information on timeframes and deadlines for filing foreign patent applications. The guide is available either by contacting the USPTO Contact Center at 800-786-9199, or it can be viewed on the USPTO website at http://www.uspto.gov/web/offices/pac/doc/general/index.html.

For information on preventing theft of your intellectual property (patents, trademarks and copyrights), you may wish to consult the U.S. Government website, http://www.stopfakes.gov. Part of a Department of Commerce initiative, this website includes self-help "toolkits" giving innovators guidance on how to protect intellectual property in specific countries such as China, Korea and Mexico. For questions regarding patent enforcement issues, applicants may call the U.S. Government hotline at 1-866-999-HALT (1-866-999-4158).

LICENSE FOR FOREIGN FILING UNDER

Title 35, United States Code, Section 184

Title 37, Code of Federal Regulations, 5.11 & 5.15

GRANTED

The applicant has been granted a license under 35 U.S.C. 184, if the phrase "IF REQUIRED, FOREIGN FILING LICENSE GRANTED" followed by a date appears on this form. Such licenses are issued in all applications where the conditions for issuance of a license have been met, regardless of whether or not a license may be required as set forth in 37 CFR 5.15. The scope and limitations of this license are set forth in 37 CFR 5.15(a) unless an earlier license has been issued under 37 CFR 5.15(b). The license is subject to revocation upon written notification. The date indicated is the effective date of the license, unless an earlier license of similar scope has been granted under 37 CFR 5.13 or 5.14.

This license is to be retained by the licensee and may be used at any time on or after the effective date thereof unless it is revoked. This license is automatically transferred to any related applications(s) filed under 37 CFR 1.53(d). This license is not retroactive.

The grant of a license does not in any way lessen the responsibility of a licensee for the security of the subject matter as imposed by any Government contract or the provisions of existing laws relating to espionage and the national security or the export of technical data. Licensees should apprise themselves of current regulations especially with respect to certain countries, of other agencies, particularly the Office of Defense Trade Controls, Department of State (with respect to Arms, Munitions and Implements of War (22 CFR 121-128)); the Bureau of Industry and Security, Department of Commerce (15 CFR parts 730-774); the Office of Foreign AssetsControl, Department of Treasury (31 CFR Parts 500+) and the Department of Energy.

NOT GRANTED

No license under 35 U.S.C. 184 has been granted at this time, if the phrase "IF REQUIRED, FOREIGN FILING LICENSE GRANTED" DOES NOT appear on this form. Applicant may still petition for a license under 37 CFR 5.12, if a license is desired before the expiration of 6 months from the filing date of the application. If 6 months has lapsed from the filing date of this application and the licensee has not received any indication of a secrecy order under 35 U.S.C. 181, the licensee may foreign file the application pursuant to 37 CFR 5.15(b).

UNITED STATES PATENT AND TRADEMARK OFFICE

UNITED STATES DEPARTMENT OF COMMERCE
United States Patent and Trademark Office
Address: COMMISSIONER FOR PATENTS
P.O. Box 1450
Alexandria, Virginia 22313-1450
www.uspto.gov

APPLICATION NO.	FILING DATE	FIRST NAMED INVENTOR	ATTORNEY DOCKET NO.	CONFIRMATION NO.
12/411,073	03/25/2009	Mikio WATANABE	2091-0499PUS1	4466

2292 7590 02/02/2011

BIRCH STEWART KOLASCH & BIRCH
PO BOX 747
FALLS CHURCH, VA 22040-0747

EXAMINER	
BANKS HAROLD, MARSHA DENISE	

ART UNIT	PAPER NUMBER
2482	

NOTIFICATION DATE	DELIVERY MODE
02/02/2011	ELECTRONIC

Please find below and/or attached an Office communication concerning this application or proceeding.

The time period for reply, if any, is set in the attached communication.

Notice of the Office communication was sent electronically on above-indicated "Notification Date" to the following e-mail address(es):

mailroom@bskb.com

UNITED STATES PATENT AND TRADEMARK OFFICE

Commissioner for Patents
United States Patent and Trademark Office
P.O. Box 1450
Alexandria, VA 22313-1450
www.uspto.gov

MAILED

FEB 02 2011

DIRECTOR OFFICE
TECHNOLOGY CENTER 2400

BIRCH STEWART KOLASCH & BIRCH
PO BOX 747
FALLS CHURCH VA 22040-0747

In re Application of :
WATANABE, MIKIO, et al. :
Application No. 12/411,073 :
Filed: March 25, 2009 :
Attorney Docket No. **2091-0499PUS1** :

DECISION ON REQUEST TO PARTICIPATE IN PATENT PROSECUTION HIGHWAY PROGRAM AND PETITION TO MAKE SPECIAL UNDER 37 CFR 1.102(d)

This is a decision on the request to participate in the Patent Prosecution Highway (PPH) program and the petition under 37 CFR 1.102(d), filed December 21, 2010 to make the above-identified application special.

The request and petition are **GRANTED**.

A grantable request to participate in the PPH program and petition to make special require:

(1) The U.S. application must validly claim priority under 35 U.S.C. 119(a) to one or more applications filed in the JPO;
(2) Applicant must submit a copy of the allowable/patentable claim(s) from the JPO application(s) along with an English translation thereof and a statement that the English translation is accurate;
(3) All the claims in the U.S. application must sufficiently correspond or be amended to sufficiently correspond to the allowable/patentable claim(s) in the JPO application(s);
(4) Examination of the U.S. application has not begun;
(5) Applicant must submit a copy of all the office actions from each of the JPO application(s) containing the allowable/patentable claim(s) along with an English translation thereof and a statement that the English translation is accurate;
(6) Applicant must submit an IDS listing the documents cited by the JPO examiner in the JPO office action along with copies of documents except U.S. patents or U.S. patent application publications; and

The request to participate in the PPH program and petition comply with the above requirements. Accordingly, the above-identified application has been accorded "special" status.
Telephone inquiries concerning this decision should be directed to Mehrdad Dastouri at 571-272-7418.

All other inquiries concerning the examination or status of the application should be directed to Patent Application Information Retrieval (PAIR) system.

The application is being forwarded to the examiner for action on the merits commensurate with this decision.

/ Mehrdad Dastouri /

Mehrdad Dastouri
Quality Assurance Specialist
Technology Center 2400

SPE RESPONSE FOR CERTIFICATE OF CORRECTION

DATE : 4-5-11 Paper No.: _____

TO SPE OF : ART UNIT 3745

SUBJECT : Request for Certificate of Correction for Appl. No.: 12/411,231 Patent No.: 7891949

CofC mailroom date: 3-30-11

Please respond to this request for a certificate of correction within 7 days.

FOR IFW FILES: Check figs.

Please review the requested changes/corrections as shown in the **COCIN** document(s) in the IFW application image. No new matter should be introduced, nor should the scope or meaning of the claims be changed.

Please complete the response (see below) and forward the completed response to scanning using document code **COCX**.

FOR PAPER FILES:

Please review the requested changes/corrections as shown in the attached certificate of correction. Please complete this form (see below) and forward it with the file to:

Certificates of Correction Branch (CofC)
Randolph Square – 9D10-A
Palm Location 7580

Ennis Young
Certificates of Correction Branch
703-756-1814 _____

Thank You For Your Assistance

The request for issuing the above-identified correction(s) is hereby:
Note your decision on the appropriate box.

- ☒ **Approved** — **All** changes apply.
- ☐ **Approved in Part** — Specify below which changes **do not** apply.
- ☐ **Denied** — State the reasons for denial below.

Comments: _____

Edward Tso — **SPE**

3745 — **Art Unit**

UNITED STATES PATENT AND TRADEMARK OFFICE

Commissioner for Patents
United States Patent and Trademark Office
P.O. Box 1450
Alexandria, VA 22313-1450
www.uspto.gov

DOCKET CLERK
P.O. DRAWER 800889
DALLAS TX 75380

MAILED
AUG 02 2011
OFFICE OF PETITIONS

In re Application of	:	
Nam et al.	:	
Application No. 12/411,251	:	DECISION ON PETITION
Filed: March 25, 2009	:	
Attorney Docket No. 2008.04.010.WS0	:	

This is a decision on the petition under the unintentional provisions of 37 CFR 1.137(b), filed July 13, 2011, to revive the above-identified application.

The petition is **GRANTED.**

The application became abandoned for failure to reply in a timely manner to the non-final Office action mailed, November 15, 2010, which set a shortened statutory period for reply of three (3) months. No extensions of time under the provisions of 37 CFR 1.136(a) were obtained. Accordingly, the application became abandoned on February 16, 2011. A Notice of Abandonment was mailed June 28, 2011.

The petition satisfies the requirements of 37 CFR 1.137(b) in that petitioner has supplied (1) the reply in the form of an Amendment, (2) the petition fee of $1,620.00, and (3) a proper statement of unintentional delay.

Further, the address given on the petition differs from the address of record. A courtesy copy of this decision is being mailed to the address given on the petition; however, the Office will mail all future correspondence solely to the address of record.

Telephone inquiries concerning this decision should be directed to the undersigned at (571) 272-7751.

This application is being referred to Technology Center AU 2474 for appropriate action by the Examiner in the normal course of business on the reply received.

/Joan Olszewski/
Joan Olszewski
Petitions Examiner
Office of Petitions

cc: John T. Mockler
12770 Coit Road
600 Banner Place
Dallas, TX 75251

UNITED STATES PATENT AND TRADEMARK OFFICE

UNITED STATES DEPARTMENT OF COMMERCE
United States Patent and Trademark Office
Address: COMMISSIONER FOR PATENTS
P.O. Box 1450
Alexandria, Virginia 22313-1450
www.uspto.gov

APPLICATION NO.	FILING DATE	FIRST NAMED INVENTOR	ATTORNEY DOCKET NO.	CONFIRMATION NO.
12/411,257	03/25/2009	Daniel J. BEDELL	MARE 3808	4818

7812 7590 04/08/2011

CHERNOFF, VILHAUER, MCCLUNG & STENZEL, LLP
601 SW Second Avenue, Suite 1600
Portland, OR 97204

EXAMINER	
JALALZADEH ABYANE, SHILA	
ART UNIT	PAPER NUMBER
3764	
MAIL DATE	DELIVERY MODE
04/08/2011	PAPER

Please find below and/or attached an Office communication concerning this application or proceeding.

The time period for reply, if any, is set in the attached communication.

UNITED STATES PATENT AND TRADEMARK OFFICE

Commissioner for Patents
United States Patent and Trademark Office
P.O. Box 1450
Alexandria, VA 22313-1450
www.uspto.gov

CHERNOFF, VILHAUER, MCCLUNG & STENZEL, LLP
601 SW Second Avenue, Suite 1600
Portland OR 97204

In re Application of:
BEDELL, DANIEL J. et al
Serial No.: 12/411,257
Filed: March 25, 2009
Docket: MARE 3808
Title: EXERCISE APPARATUS WITH AUTOMATICALLY ADJUSTABLE FOOT MOTION

DECISION ON PETITION

This is a decision on the petition filed on March 21, 2011 by which petitioner requests reconsideration and withdrawal of the restriction between two inventions and election of species requirements mailed on Sep. 16, 2010 and repeated on February 18, 2011. This petition is being considered pursuant to 37 CFR 1.144 and 37 CFR 1.181, and no fee is required.

The petition is granted.

In finding petitioner's points of argument persuasive, the requested relief is granted. The restriction requirements mailed on September 16, 2010 and repeated on February 8, 2011 are hereby withdrawn. The examiner has been directed to issue a new Office action to treat previously held withdrawn claims 9-13 and 22-36 on the merits as soon as possible.

The application is being forwarded to the examiner via the Supervisory Patent Examiner of Art Unit 3764 for the examiner's preparation of an Office action consistent with this decision. The mere filing of a petition will not stay any period for reply that may be running against the application, nor act as a stay of other proceedings. Any inquiry regarding this decision should be directed to Henry Yuen, Special Programs Examiner, at (571) 272-4856.

PETITION GRANTED.

Donald T. Hajec, Director
Technology Center 3700

PATENT

IN THE UNITED STATES PATENT AND TRADEMARK OFFICE

In re application of: Jeffrey Phillips, et al.	Docket No.: PWRGP036
Application No.: 12/411,282	Examiner: *to be assigned*
Filed: March 25, 2009	Art Unit: 1795
Title: CYLINDRICAL NICKEL-ZINC CELL WITH NEGATIVE CAN	Confirmation No.: 4873

CERTIFICATE OF EFS-WEB TRANSMISSION
I hereby certify that this correspondence is being transmitted electronically through EFS-WEB to the Commissioner for Patents, P.O. Box 1450 Alexandria, VA 22313-1450 on January 27, 2011.

Signed: /Kelly Simpson/
Kelly Simpson

STATEMENT OF SPECIAL STATUS FOR ELIGIBILITY REQUIREMENT FOR GREEN TECHNOLOGY PILOT PROGRAM (74 Fed. Reg. 64666)

Commissioner for Patents
P.O. Box 1450
Alexandria, VA 22313-1450

Dear Sir/Madam:

This statement accompanies a Petition to Make Special Under the Green Technology Pilot Program (74 Fed. Reg. 64666). The subject patent application meets the following conditions of eligibility:

Basis for Special Status and Statement Pertaining to Materiality Standard

1. The claims of the subject patent application are directed to a single invention that materially contributes to renewable energy resources, energy use and conservation as well as greenhouse gas emission reduction. The invention is directed to rechargeable nickel-zinc battery technology developed as energy storage devices that deliver exceptionally high power in a safe, low cost, lightweight and reusable package.

2. The invention materially contributes to renewable energy resources, energy use and conservation because their high power output allows more efficient energy utilization and their rechargeability allows conservation of energy resources. With respect to energy conservation, the technology is particularly well suited for grid storage applications where the low cost per Watt and high round trip energy efficiency are highly valued.

3. The invention materially contributes to greenhouse gas emission reduction because the economics and high power delivery of the battery technology make it one of the most attractive candidates for inclusion in both full and micro (stop-start) hybrid electric vehicles. Testing has already demonstrated its ability to meet automotive specifications in both applications.

4. If the USPTO determines that the claims are directed to multiple inventions, Applicants agree to make an election without traverse in a telephonic interview, and to elect an invention that meets the eligibility requirements of the Green Technology Pilot Program.

5. The subject patent application is a non-reissue, non-reexamination, non-provisional utility application filed under 35 USC §111(a).

I declare that all statements made herein of my own knowledge are true; that all statements made on the information and behalf are believed to be true and further that these statements made with the knowledge that willful false statements are punishable by fine or imprisonment, or both under section 1001 of Title 18 of the United States Code, and that such willful false statements may jeopardize the validity of the application or any patent issuing thereon.

Respectfully submitted,
WEAVER AUSTIN VILLENEUVE & SAMPSON LLP

/Brian D. Griedel/
Brian D. Griedel
Reg. No. 48,425

P.O. Box 70250
Oakland, CA 94612-0250
(510) 663-1100

Doc Code: PET.GREEN
Document Description: Petition for Green Tech Pilot

PTO/SB/420 (11-10)
Approved for use through 01/31/2011. OMB 0651-0062
U.S. Patent and Trademark Office; U. S. DEPARTMENT OF COMMERCE
Under the Paperwork Reduction Act of 1995, no persons are required to respond to a collection of information unless it displays a valid OMB control number.

PETITION TO MAKE SPECIAL UNDER THE GREEN TECHNOLOGY PILOT PROGRAM

Attorney Docket Number: PWRGP036	Application Number (if known): 12/411,282	Filing date: March 25, 2009

First Named Inventor: Jeffrey Phillips, et al.

Title: CYLINDRICAL NICKEL-ZINC CELL WITH NEGATIVE CAN

APPLICANT HEREBY REQUESTS TO PARTICIPATE IN THE GREEN TECHNOLOGY PILOT PROGRAM FOR THE ABOVE-IDENTIFIED APPLICATION. See Instruction Sheet on page 2.

This petition must be timely filed electronically using the USPTO electronic filing system, EFS-Web.

1. By filing this petition:

   Applicant is requesting early publication: Applicant hereby requests early publication under 37 CFR 1.219 and the publication fee set forth in 37 CFR 1.18(d) accompanies this request.

2. By filing this petition: applicant is agreeing to make an election without traverse in a telephonic interview and elect an invention that meets the eligibility requirements for the Green Technology Pilot Program, if the Office determines that the claims are not obviously directed to a single invention. See Instruction Sheet.

3. This request is accompanied by statements of special status for the eligibility requirement.

4. The application contains no more than three (3) independent claims and twenty (20) total claims.

5. The application does not contain any multiple dependent claims.

6. Other attachments: Preliminary Amendment

Signature	Date January 27, 2011
Name (Print/Typed) Brian D. Griedel	Registration Number 48,425

Note: *Signatures of all the inventors or assignees of record of the entire interest or their representative(s) are required in accordance with 37 CFR 1.33 and 11.18. Please see 37 CFR 1.4(d) for the form of the signature. If necessary, submit multiple forms for more than one signature see below*.*

☐ *Total of ..... forms are submitted.

The information is required to obtain or retain a benefit by the public which is to file (and by the USPTO to process) an application. Confidentiality is governed by 35 U.S.C. 122 and 37 CFR 1.11 and 1.14. This collection is estimated to take 12 hours to complete, including gathering, preparing, and submitting the completed application form to the USPTO. Time will vary depending upon the individual case. Any comments on the amount of time you require to complete this form and/or suggestions for reducing this burden, should be sent to the Chief Information Officer, U.S. Patent and Trademark Office, U.S. Department of Commerce, P.O. Box 1450, Alexandria, VA 22313-1450. DO NOT SEND FEES OR COMPLETED FORMS TO THIS ADDRESS. **SEND TO: Commissioner for Patents, P.O. Box 1450, Alexandria, VA 22313-1450.**

If you need assistance in completing the form, call 1-800-PTO-9199 and select option 2.

UNITED STATES PATENT AND TRADEMARK OFFICE

UNITED STATES DEPARTMENT OF COMMERCE
United States Patent and Trademark Office
Address: COMMISSIONER FOR PATENTS
P.O. Box 1450
Alexandria, Virginia 22313-1450
www.uspto.gov

APPLICATION NO.	FILING DATE	FIRST NAMED INVENTOR	ATTORNEY DOCKET NO.	CONFIRMATION NO.
12/411,282	03/25/2009	Jeffrey Phillips	PWRGP036	4873

22434 7590 02/17/2011
Weaver Austin Villeneuve & Sampson LLP
P.O. BOX 70250
OAKLAND, CA 94612-0250

EXAMINER	
CONLEY, OI K	

ART UNIT	PAPER NUMBER
1726	

NOTIFICATION DATE	DELIVERY MODE
02/17/2011	ELECTRONIC

Please find below and/or attached an Office communication concerning this application or proceeding.

The time period for reply, if any, is set in the attached communication.

Notice of the Office communication was sent electronically on above-indicated "Notification Date" to the following e-mail address(es):

USPTO@wavsip.com

UNITED STATES PATENT AND TRADEMARK OFFICE

Commissioner for Patents
United States Patent and Trademark Office
P.O. Box 1450
Alexandria, VA 22313-1450
www.uspto.gov

2/17/2011

Weaver Austin Villeneuve & Sampson LLP
P.O. BOX 70250
OAKLAND CA 94612-0250

In re Application of	:	
Phillips et al.	:	DECISION ON PETITION
Application No. 12/411,282	:	TO MAKE SPECIAL UNDER
Filed: 3/25/2009	:	THE GREEN TECHNOLOGY
Attorney Docket No. **PWRGP036**	:	PILOT PROGRAM

This is a decision on the petition under 37 CFR 1.102, filed 1/27/2011, to make the above-identified application special under the pilot program for applications pertaining to Green Technologies as set forth in 74 Federal Register Notice 64666 (December 8, 2009) and amended by 75 Federal Register Notice 28554 (May 21, 2010) and 75 Federal Register Notice 69049 (November 10, 2010).

The petition is **GRANTED**.

A grantable petition to make an application special under 37 CFR 1.102 and the pilot program as set forth in 74 FR 64666 must be directed to a nonprovisional application filed under 35 USC 111(a) or be a national stage entry under 35 USC 371, exclusive of any reissue applications.

In order to qualify for special status, the following requirements must be met. 1) The application must have no more than 3 independent claims and no more than 20 total claims. 2) The application must not contain any multiple dependent claims. 3) The petition must state the basis for seeking special status, i.e., the claimed invention either: A) materially enhances the quality of the environment or B) materially contributes to: i) the discovery or development of renewable energy resources, ii) the more efficient utilization and conservation of energy resources, or iii) greenhouse gas emission reduction. 4) If the disclosure is not clear on its face that the claimed invention materially contributes under category (A) or (B), the petition must be accompanied by a statement by the applicant, assignee, or an attorney/agent registered to practice before the Office explaining how the materiality standard is met. 5) A statement that applicant will agree to make an election without traverse in a telephonic interview if a restriction requirement is made by the examiner. 6) The petition to make special must be filed electronically. 7) The petition must be filed at least one day prior to the date that a first Office Action appears in the Patent Application Information Retrieval (PAIR) system. 8) The petition must be accompanied by a request for early publication in compliance with 37 CFR 1.219 and include the publication fee as set forth in 37 CFR 1.18(d).

The requirement for a fee for consideration of the petition to make special for applications pertaining to Green Technologies has been waived.

The instant petition complies with items 1 – 8 above. Accordingly, the above-identified application has been accorded "special" status.

Telephone inquires concerning this decision should be directed to Tom Dunn at 571-272-1171.

The application is being forwarded to the Technology Center Art Unit 1726 for action on the merits commensurate with this decision.

/Tom Dunn/

Tom Dunn
Quality Assurance Specialist
Technology Center 1700

I hereby certify that this correspondence is being filed via EFS-Web with the United States Patent and Trademark Office on February 2, 2011.

TOWNSEND and TOWNSEND and CREW LLP

By: /Kelly Mak/

PATENT
Docket No.: 017018-008820US
Client Ref. No.: VS-0182-US-3

IN THE UNITED STATES PATENT AND TRADEMARK OFFICE

In re application of:	Confirmation No.: 4940
Mark J. Miller	Examiner: Maung, Nay Aung
Application No.: 12/411,315	Art Unit: 2618
Filed: March 25, 2009	PETITION TO MAKE SPECIAL PURSUANT TO 37 C.F.R. §1.102
For: PLACEMENT OF GATEWAYS NEAR SERVICE BEAMS	
Customer No.: 61668	

Commissioner for Patents
P.O. Box 1450
Alexandria, VA 22313-1450

Sir:

Applicant hereby petitions the Commissioner to make special the above-identified application in accordance with the Patent Application Backlog Reduction Stimulus Plan, as most recently published in the Federal Register on November 22, 2010 at 75 Fed. Reg. 71072, pursuant to 37 C.F.R. §1.102. Applicant states the following:

a) the basis under which special status is being sought is express abandonment of another copending application, pursuant to the Patent Application Backlog Reduction Stimulus Plan;

b) a copy of the letter of express abandonment and the statements accompanying the letter of express abandonment from the copending application that is expressly abandoned, as filed with the USPTO, is attached as exhibit A;

c) both the instant application and the expressly abandoned application are currently commonly assigned to Viasat, Inc., and were so assigned prior to October 1, 2009;

d) the application that is expressly abandoned is application serial number 12/276,134, which was filed on November 21, 2008;

e) applicant hereby certifies that applicant has not filed petitions in more than fourteen other applications requesting special status under the Patent Application Backlog Reduction Stimulus Plan program; and

f) applicant hereby agrees to make an election without traverse in a telephonic interview if the Office determines that the claims of the instant application are directed to two or more independent and distinct inventions.

Below are the applications involved in this Patent Application Exchange Program transaction. Please notify the undersigned immediately if you notice any inconsistencies between this information and the information on file.

Application being Advanced	Application being Abandoned
Serial Number: 12/411,315 Title: PLACEMENT OF GATEWAYS NEAR SERVICE BEAMS First Named Inventor: Miller Filing Date: 25-Mar-2009 Attorney Docket: 017018-008820US Client Docket: VS-0182-US-3	Serial Number: 12/276,134 Title: FLEXIBLE ASSIGNMENT OF SCHEDULED AND REQUEST TRANSMISSIONS First Named Inventor: Becker Filing Date: 21-Nov-2008 Attorney Docket: 017018-017010US Client Docket: VS-0270-US-2

Pursuant to the conditions for being accorded special status for examination under the Patent Application Backlog Stimulus Reduction Plan, applicant believes no fee is required for the instant petition. Applicant respectfully requests that this petition to make special pursuant to 37 C.F.R. §1.102 be granted.

Respectfully submitted,

Preetam B. Pagar

Preetam B. Pagar
Reg. No. 57,684

TOWNSEND and TOWNSEND and CREW LLP
Two Embarcadero Center, Eighth Floor
San Francisco, California 94111-3834
Tel: (415) 576-0200
Fax: (415) 576-0300
PBP:pbp

63064573 v1

EXHIBIT A

Mailroom date of February 2, 2011 as downloaded from PAIR

Electronic Acknowledgement Receipt

EFS ID:	9360153
Application Number:	12276134
International Application Number:	
Confirmation Number:	3421
Title of Invention:	FLEXIBLE ASSIGNMENT OF SCHEDULED AND REQUEST TRANSMISSIONS
First Named Inventor/Applicant Name:	Donald W. Becker
Customer Number:	61668
Filer:	Preetam Baburao Pagar/Kelly Mak
Filer Authorized By:	Preetam Baburao Pagar
Attorney Docket Number:	017018-017010US
Receipt Date:	02-FEB-2011
Filing Date:	21-NOV-2008
Time Stamp:	13:30:23
Application Type:	Utility under 35 USC 111(a)

COPY

Payment information:

Submitted with Payment	no

File Listing:

Document Number	Document Description	File Name	File Size(Bytes)/ Message Digest	Multi Part /.zip	Pages (if appl.)
1	Letter Express Abandonment of the application	Express_Abandonment_017018_017010US.pdf	80970 25d0d1ff41f2aa3b44e4b2e72e6a7d121a345c6c	no	1

Warnings:	
Information:	

2	Letter Express Abandonment of the application	Abandonment_Statement_017018_017010US.pdf	83390 ac220e4ea6b556475cbd0944b6477ae3da214a78	no	2
Warnings:					
Information:					
			Total Files Size (in bytes):	164360	

This Acknowledgement Receipt evidences receipt on the noted date by the USPTO of the indicated documents, characterized by the applicant, and including page counts, where applicable. It serves as evidence of receipt similar to a Post Card, as described in MPEP 503.

New Applications Under 35 U.S.C. 111
If a new application is being filed and the application includes the necessary components for a filing date (see 37 CFR 1.53(b)-(d) and MPEP 506), a Filing Receipt (37 CFR 1.54) will be issued in due course and the date shown on this Acknowledgement Receipt will establish the filing date of the application.

National Stage of an International Application under 35 U.S.C. 371
If a timely submission to enter the national stage of an international application is compliant with the conditions of 35 U.S.C. 371 and other applicable requirements a Form PCT/DO/EO/903 indicating acceptance of the application as a national stage submission under 35 U.S.C. 371 will be issued in addition to the Filing Receipt, in due course.

New International Application Filed with the USPTO as a Receiving Office
If a new international application is being filed and the international application includes the necessary components for an international filing date (see PCT Article 11 and MPEP 1810), a Notification of the International Application Number and of the International Filing Date (Form PCT/RO/105) will be issued in due course, subject to prescriptions concerning national security, and the date shown on this Acknowledgement Receipt will establish the international filing date of the application.

COPY

PTO/SB/24 (07-09)

EXPRESS ABANDONMENT UNDER 37 CFR 1.138

File the petition electronically using EFS-Web
Or **Mail** the petition to:
Mail Stop Express Abandonment
Commissioner for Patents
P.O. Box 1450, Alexandria, VA 22313-1450

Application Number	12/276,134
Filing Date	November 21, 2008
First Named Inventor	Becker, Donald W.
Art Unit	2473
Examiner Name	Yao, Kwang Bin
Attorney Docket Number	017018-017010US

Please **check only one** of boxes 1 or 2 below:
(If no box is checked, this paper will be treated as a request for express abandonment as if box 1 is checked.)

1. ☒ **Express Abandonment**
I request that the above-identified application be expressly abandoned as of the filing date of this paper.

2. ☐ **Express Abandonment in Favor of a Continuing Application**
I request that the above-identified application be expressly abandoned as of the filing date accorded the continuing application filed previously or herewith.

NOTE: A paper requesting express abandonment of an application is not effective unless and until an appropriate USPTO official recognizes and acts on the paper. See the Manual of Patent Examining Procedure (MPEP), section 711.01.

COPY

TO AVOID PUBLICATION, PLEASE USE FORM PTO/SB/24A INSTEAD OF THIS FORM.

TO REQUEST A REFUND OF SEARCH FEE AND EXCESS CLAIMS FEE (IF ELIGIBLE), USE FORM PTO/SB/24B INSTEAD OF THIS FORM.

I am the

☐ applicant.

☐ assignee of record of the entire interest. See 37 CFR 3.71.
Statement under 37 CFR 3.73(b) is enclosed. (Form PTO/SB/96)

☒ attorney or agent of record. Attorney or agent registration number is 57,684

☐ attorney or agent acting under 37 CFR 1.34, who is authorized under 37 CFR 1.138(b) because the application is expressly abandoned in favor of a continuing application (box 2 above must be checked). Attorney or agent registration number is _____.

/Preetam B. Pagar/
Signature

February 2, 2011
Date

Preetam B. Pagar
Typed or printed name

415-576-0200
Telephone Number

Note: Signatures of all the inventors or assignees of record of the entire interest or their representative(s) are required. Submit multiple forms if more than one signature is required, see below.

☒ Total of 1 forms are submitted.

63070145 v1

I hereby certify that this correspondence is being filed via EFS-Web with the United States Patent and Trademark Office on February 2, 2011.

TOWNSEND and TOWNSEND and CREW LLP

By: /Kelly Mak/

PATENT
Docket No.: 017018-017010US
Client Ref. No.: VS-0270-US-2

IN THE UNITED STATES PATENT AND TRADEMARK OFFICE

In re application of:

Donald W. Becker

Application No.: 12/276,134

Filed: November 21, 2008

For: FLEXIBLE ASSIGNMENT OF SCHEDULED AND REQUEST TRANSMISSIONS

Customer No.: 61668

Confirmation No.: 3421

Examiner: Yao, Kwang Bin

Art Unit: 2473

STATEMENT PURSUANT TO PATENT APPLICATION BACKLOG REDUCTION STIMULUS PLAN

COPY

Commissioner for Patents
P.O. Box 1450
Alexandria, VA 22313-1450

Commissioner:

Pursuant to the Patent Application Backlog Reduction Stimulus Plan, as most recently published in the Federal Register on November 22, 2010 at 75 Fed. Reg. 71072, applicant hereby expressly abandons the instant application. A petition for express abandonment of the instant application pursuant to 37 C.F.R. §1.138(a) is filed concurrently with this paper. Pursuant to the requirements of the Patent Application Backlog Reduction Stimulus Plan, applicant hereby makes the following statements:

a) applicant has not and will not file an application that claims the benefit of the instant expressly abandoned application under any provision of Title 35, United States Code;

b) applicant agrees not to request a refund of any fees paid in the instant expressly abandoned application; and

c) applicant has not and will not file a new application that claims the same invention claimed in the instant expressly abandoned application.

Below are the applications involved in this Patent Application Exchange Program transaction. Please notify the undersigned immediately if you notice any inconsistencies between this information and the information on file.

Application being Advanced	Application being Abandoned
Serial Number: 12/411,315 Title: PLACEMENT OF GATEWAYS NEAR SERVICE BEAMS First Named Inventor: Miller Filing Date: 25-Mar-2009 Attorney Docket: 017018-008820US Client Docket: VS-0182-US-3	Serial Number: 12/276,134 Title: FLEXIBLE ASSIGNMENT OF SCHEDULED AND REQUEST TRANSMISSIONS First Named Inventor: Becker Filing Date: 21-Nov-2008 Attorney Docket: 017018-017010US Client Docket: VS-0270-US-2

COPY

Respectfully submitted,

/Preetam B. Pagar/

Preetam B. Pagar
Reg. No. 57,684

TOWNSEND and TOWNSEND and CREW LLP
Two Embarcadero Center, Eighth Floor
San Francisco, California 94111-3834
Tel: (415) 576-0200
Fax: (415) 576-0300
PBP:pbp
63070211 v1

UNITED STATES PATENT AND TRADEMARK OFFICE

Commissioner for Patents
United States Patent and Trademark Office
P.O. Box 1450
Alexandria, VA 22313-1450
www.uspto.gov

TOWNSEND AND TOWNSEND AND CREW LLP/VIASAT
VIASAT, INC. (CLIENT #017018)
TWO EMBARCADERO CENTER
8TH FLOOR
SAN FRANCISCO CA 94111

MAILED

FEB 15 2011

OFFICE OF PETITIONS

In re Application of :
MILLER :
Application No. 12/411,315 :
Filed: March 25, 2009 :
Attorney Docket No. **017018-008820US** :

DECISION ON PETITION
TO MAKE SPECIAL
37 CFR 1.102

This is a decision on the petition under 37 CFR 1.102, filed February 2, 2011, to make the above-identified application special under the Patent Application Backlog Reduction Stimulus Plan which is a pilot program set forth at 74 Federal Register Notice 62285 (November 27, 2009) and 75 Federal register Notice 36063 (June 24, 2010).

The petition is **GRANTED**.

A grantable petition to make an application special under 37 CFR 1.102 and the pilot program as set forth in 74 FR 62285 and 75 FR 36063 must be directed to a nonprovisional application filed prior to October 1, 2009.

The USPTO will accord special status for examination under Patent Application Backlog Reduction Stimulus Plan under the following conditions:

(1) The application for which special status is sought is a nonprovisional application that has an actual filing date earlier than October 1, 2009;

(2) The applicant has another copending nonprovisional application that has an actual filing date earlier than October 1, 2009, and is complete under 37 CFR 1.53;

(3) The application for which special status is sought and the other copending nonprovisional application either are owned by the same party as of October 1, 2009, or name at least one inventor in common;

(4) The applicant files a letter of express abandonment under 37 CFR 1.138(a) in the copending nonprovisional application before it has been taken up for examination and

a) includes a statement that the applicant has not and will not file a new application that claims the same invention claimed in the expressly abandoned application;

b) includes a statement that the applicant has not and will not file an application that claims the benefit of the expressly abandoned application under any provision of title 35, United States Code, and

c) includes a statement that the applicant agrees not to request a refund of any fees paid in the expressly abandoned application; and

(5) The applicant files a petition under 37 CFR 1.102 in the application for which special status is sought that

a) includes a specific identification of the relationship between the applications that qualifies the application for special status;

b) identifies, by application number if available, the application that is being expressly abandoned;

c) provides a statement certifying that applicant has not filed petitions in more than fourteen (14) other applications requesting special status under this program; and

d) provides a statement that applicant agrees to make an election without traverse in a telephonic interview if the Office determines that the claims of the application to be made special are directed to two or more independent and distinct inventions.

The requirement for a fee for consideration of the petition to make special for applications pertaining to Patent Application Backlog Reduction Stimulus Plan has been waived.

The instant petition complies with the conditions required under Patent Application Backlog Reduction Stimulus Plan. Accordingly, the above-identified application has been accorded "special" status.

Telephone inquires concerning this decision should be directed to Brian W. Brown at 571-272-5338.

All other inquires concerning either the examination or status of the application should be directed to the Technology Center.

The application is being forwarded to the Office of Patent Application Processing for further processing commensurate with this decision.

Brian W. Brown
Petitions Examiner
Office of Petitions

UNITED STATES PATENT AND TRADEMARK OFFICE

UNITED STATES DEPARTMENT OF COMMERCE
United States Patent and Trademark Office
Address: COMMISSIONER FOR PATENTS
P.O. Box 1450
Alexandria, Virginia 22313-1450
www.uspto.gov

APPLICATION NO.	FILING DATE	FIRST NAMED INVENTOR	ATTORNEY DOCKET NO.	CONFIRMATION NO.
12/411,331	03/25/2009	Katsuhiko TAKEUCHI	4880.85112	4972

7590 07/07/2011

GREER, BURNS & CRAIN
300 S WACKER DR
25TH FLOOR
CHICAGO, IL 60606

EXAMINER	
HUYNH, KIM T	
ART UNIT	**PAPER NUMBER**
2111	
MAIL DATE	**DELIVERY MODE**
07/07/2011	PAPER

DECISION GRANTING PETITION UNDER 37 CFR 1.138(d)

The declaration of express abandonment is recognized

This is in response to the petition under 37 CFR 1.138(d), requesting for a refund of any previously paid search fee and excess claims fee in the above-identified application.

The petition is granted.

The express abandonment is recognized. Any previously paid search fee and excess claims fee are hereby refunded.

Telephone inquiries should be directed to the Office of Data Management at (571) 272-4200.

Patent Publication Branch
Office of Data Management

UNITED STATES PATENT AND TRADEMARK OFFICE

Commissioner for Patents
United States Patent and Trademark Office
P.O. Box 1450
Alexandria, VA 22313-1450
www.uspto.gov

BIRCH STEWART KOLASCH & BIRCH
PO BOX 747
FALLS CHURCH VA 22040-0747

MAILED

FEB 23 2011

OFFICE OF PETITIONS

In re Application :
Je Hyung Lee et al. :
Application No. 12/411,333 : ON PETITION
Filed: March 25, 2009 :
Attorney Docket No. **0465-1984PUS7** :

This is a decision on the May 19, 2010 "PETITION TO SUSPEND RULES UNDER 37 C.F.R. 1.183".

The petition is before the Office of Petitions of the United States Patent and Trademark Office.

The petition is **DISMISSED**.

DECISION

The present application was filed for reissue of U.S. patent 5,587,789.

37 CFR 1.125(d) prohibits the filing of a substitute specification in a reissue application, while the present petition requests entry of the substitute specification filed on May 19, 2010. Accordingly, this petition is being considered as a petition under 37 CFR 1.183 for a waiver of 37 CFR 1.125(d). Further, 37 CFR 1.173(a)(1) requires the filing of the specification in the form of "a copy of the printed patent, in double column format, each page on only one side of a single sheet of paper."

On May 19, 2010, the substitute specification was filed together with an Amendment.

The substitute specification filed on May 19, 2010, is not a copy of the printed patent, in double column format. Accordingly, this petition is also being considered as a petition under 37 CFR 1.183 for a waiver of 37 CFR 1.173(a)(1).

Petitioner argues that, at the Examiner's request, the specification has been amended to update the status of the family applications according to U.S. patent practice and is requesting waiver of the requirements of 37 CFR 1.125(d) and 37 CFR 1.173(a)(1). This basis is considered to be insufficient for granting the petition. 37 CFR 1.183 provides that "in an extraordinary situation, where justice requires" a regulation may be waived. An extraordinary situation is not present where there is an avenue for relief that does not necessitate waiver of any rules. See also *Cantello v. Rasmussen*, 220 USPQ 664 (Comr. 1982) for the principle that extraordinary relief will not normally be considered if the rules provide an avenue for obtaining the relief sought.

In this instance, petitioner fails to show that applicant cannot accomplish the desired result – the entry of an amendment placing the application in proper format – within the ordinary procedures set out by the Office. Petitioner has not shown why the desired result cannot be accomplished by providing replacement paragraphs, and incorporating the material in the certificate of correction to be entered without the use of underlining and bracketing.

It appears that applicant can submit an amendment which directs the Office to replace the appropriate paragraphs in order to conform the application to the patent. For example, applicant can direct the Office to "replace the paragraph starting on Column 1, line 56, with the following paragraph...," where the paragraph supplied would reflect the change to column 1 line 57 (and as retyped in the substitute specification) with no underlining or brackets provided.

It is to be noted that, in this instance, it has not been shown that the examiner required a substitute declaration to address the examiner's request that the specification be amended to update the status of the family applications according to U.S. patent practice.

In view of the above discussion, waiver of the rules has not been shown to be appropriate in this instance. Therefore, the petition is **dismissed**.

CONCLUSION

1. The petition under 37 CFR 1.183 to waive, for the instant application, the requirements of 37 CFR 1.125(d) and 37 CFR 1.173(a)(1) is **dismissed**.

2. Applicant is being provided with a period of **one month** to file a response.

3. Jurisdiction over the reissue application is being returned to the Technology Center, Art Unit 2481.

3. Telephone inquiries with regard to this decision should be directed to Senior Petitions Attorney Patricia Faison-Ball, Office of Petitions, at (571) 272-3212.

/Kenneth M. Schor/

Kenneth M. Schor
Senior Legal Advisor
Office of Patent Legal Administration

UNITED STATES PATENT AND TRADEMARK OFFICE

Commissioner for Patents
United States Patent and Trademark Office
P.O. Box 1450
Alexandria, VA 22313-1450
www.uspto.gov

MAILED

FEB 24 2011

OFFICE OF PETITIONS

BIRCH STEWART KOLASCH & BIRCH
PO BOX 747
FALLS CHURCH VA 22040-0747

In re Application :
Je Hyung Lee et al. :
Application No. 12/411,339 : ON PETITION
Filed: March 25, 2009 :
Attorney Docket No. **0465-1984PUS8** :

This is a decision on the May 19, 2010 "PETITION TO SUSPEND RULES UNDER 37 C.F.R. 1.183".

The petition is before the Office of Petitions of the United States Patent and Trademark Office.

The petition is **DISMISSED**.

DECISION

The present application was filed for reissue of U.S. patent 5,587,789.

37 CFR 1.125(d) prohibits the filing of a substitute specification in a reissue application, while the present petition requests entry of the substitute specification filed on May 19, 2010. Accordingly, this petition is being considered as a petition under 37 CFR 1.183 for a waiver of 37 CFR 1.125(d). Further, 37 CFR 1.173(a)(1) requires the filing of the specification in the form of "a copy of the printed patent, in double column format, each page on only one side of a single sheet of paper."

On May 19, 2010, the substitute specification was filed together with an Amendment.

The substitute specification filed on May 19, 2010, is not a copy of the printed patent, in double column format. Accordingly, this petition is also being considered as a petition under 37 CFR 1.183 for a waiver of 37 CFR 1.173(a)(1).

Petitioner argues that, at the Examiner's request, the specification has been amended to update the status of the family applications according to U.S. patent practice and is requesting waiver of the requirements of 37 CFR 1.125(d) and 37 CFR 1.173(a)(1). This basis is considered to be insufficient for granting the petition. 37 CFR 1.183 provides that "in an extraordinary situation, where justice requires" a regulation may be waived. An extraordinary situation is not present where there is an avenue for relief that does not necessitate waiver of any rules. See also *Cantello v. Rasmussen*, 220 USPQ 664 (Comr. 1982) for the principle that extraordinary relief will not normally be considered if the rules provide an avenue for obtaining the relief sought.

In this instance, petitioner fails to show that applicant cannot accomplish the desired result – the entry of an amendment placing the application in proper format – within the ordinary procedures set out by the Office. Petitioner has not shown why the desired result cannot be accomplished by providing replacement paragraphs, and incorporating the material in the certificate of correction to be entered without the use of underlining and bracketing.

It appears that applicant can submit an amendment which directs the Office to replace the appropriate paragraphs in order to conform the application to the patent. For example, applicant can direct the Office to "replace the paragraph starting on Column 1, line 56, with the following paragraph...," where the paragraph supplied would reflect the change to column 1 line 57 (and as retyped in the substitute specification) with no underlining or brackets provided.

It is to be noted that, in this instance, it has not been shown that the examiner required a substitute declaration to address the examiner's request that the specification be amended to update the status of the family applications according to U.S. patent practice.

In view of the above discussion, waiver of the rules has not been shown to be appropriate in this instance. Therefore, the petition is **dismissed**.

CONCLUSION

1. The petition under 37 CFR 1.183 to waive, for the instant application, the requirements of 37 CFR 1.125(d) and 37 CFR 1.173(a)(1) is **dismissed**.

2. Applicant is being provided with a period of **one month** to file a response.

3. Jurisdiction over the reissue application is being returned to the Technology Center, Art Unit 2481.

3. Telephone inquiries with regard to this decision should be directed to Senior Petitions Attorney Patricia Faison-Ball, Office of Petitions, at (571) 272-3212.

/Kenneth M. Schor/

Kenneth M. Schor
Senior Legal Advisor
Office of Patent Legal Administration

2-22-11

UNITED STATES PATENT AND TRADEMARK OFFICE

COMMISSIONER FOR PATENTS
UNITED STATES PATENT AND TRADEMARK OFFICE
P.O. BOX 1450

Mr. Leonard D. Amalaha
8305 Keeler Street
Alexandria, Virginia 22309

MAILED

JAN 06 2011

OFFICE OF PETITIONS

In re Application of	:	
Leonard AMALAHA	:	DECISION GRANTING PETITION
Application No. 12/411,373	:	UNDER 37 CFR 1.137(b)
Filed: 25 March 2009	:	
Docket No. AMLHA01	:	

This is a decision on the petition under 37 CFR 1.137(b), filed 18 May 2010, to revive the above-identified application.

The petition is **GRANTED**.

The application became abandoned for failure to reply in a timely manner to Notice to File Corrected Application Papers mailed 6 May 2009 ("Notice"), which set a reply period of (2) months. No reply was sent, and no extension of time under the provisions of 37 CFR 1.136(a) was obtained. The application thus became abandoned on 7 July 2009, with notice subsequently mailed on 13 January 2010.

The petition satisfies the conditions for revival pursuant to 37 CFR 1.137(b) by including (1) a reply in the form of a Response to the outstanding Office action, (2) a petition fee of $810.00 (small entity), and (3) a Statement of unintentional delay. The reply to the Notice is accepted as having been unintentionally delayed.

General inquiries relating to this decision should be directed to Robert DeWitty, Office of Petitions (571-272-6051), or, if unavailable, the undersigned at 571-272-7099.

The application file will be referred to Office of Patent Application Processing for further action on the filed Reply.

David Bucci
Petitions Examiner
Office of Petitions

UNITED STATES PATENT AND TRADEMARK OFFICE

UNITED STATES DEPARTMENT OF COMMERCE
United States Patent and Trademark Office
Address: COMMISSIONER FOR PATENTS
P.O. Box 1450
Alexandria, Virginia 22313-1450
www.uspto.gov

APPLICATION NO.	FILING DATE	FIRST NAMED INVENTOR	ATTORNEY DOCKET NO.	CONFIRMATION NO.
12/411,437	03/26/2009	Yonpyo Hon	4952-043	5163

22429 7590 08/31/2010
LOWE HAUPTMAN HAM & BERNER, LLP
1700 DIAGONAL ROAD
SUITE 300
ALEXANDRIA, VA 22314

EXAMINER	
DECADY, ALBERT	
ART UNIT	**PAPER NUMBER**
2121	
MAIL DATE	**DELIVERY MODE**
08/31/2010	PAPER

Please find below and/or attached an Office communication concerning this application or proceeding.

The time period for reply, if any, is set in the attached communication.

UNITED STATES PATENT AND TRADEMARK OFFICE

Commissioner for Patents
United States Patent and Trademark Office
P.O. Box 1450
Alexandria, VA 22313-1450
www.uspto.gov

Lowe, Hauptman, Ham & Berner, LLP
1700 Diagonal Road
Suite 300
Alexandria, VA 22314

In re Application of: HON, et al.
Application No. 12/411,437
Filed March 26, 2009
For: Machine Tool with Numerical Controller and On-Machine Measuring Device

DECISION ON REQUEST TO PARTICIPATE IN PATENT PROSECUTION HIGHWAY PROGRAM AND PETITION TO MAKE SPECIAL UNDER 37 CFR 1.102(d)

This is a decision on the request to participate in the Patent Prosecution Highway (PPH) program and the petition under 37 CFR 1.102(d), filed June 2, 2010 to make the above-identified application special.

The petition is **GRANTED.**

A grantable request to participate in the PPH program and petition to make special require:

(1) The U.S. application is
(a) a Paris Convention application which either
(i) validly claims priority under 35 U.S.C. 119(a) and 37 CFR 1.55 to one or more applications filed in the JPO, or
(ii) validly claims priority to a PCT application that contains no priority claims,

Or

(b) a national stage application under the PCT (an application which entered the national stage in the U.S. from a PCT international application after compliance with 35 U.S.C. 371), which PCT application
(i) validly claims priority to an application filed in the JPO, or
(ii) validly claims priority to a PCT application that contains no priority claims, or
(iii) contains no priority claim,

Or

(c) a so-called bypass application filed under 35 U.S.C. 111 (a) which validly claims benefit under 35 U.S.C. 120 to a PCT application, which PCT application

(i) validly claims priority to an application filed in the JPO, or
(ii) validly claims priority to a PCT application that contains no priority claims, or
(iii) contains no priority claim.

Where the JPO application that contains the allowable/patentable claims is not the same application for which priority is claimed in the U.S. application, applicant must identify the relationship between the JPO application that contains the allowable/patentable claims and the JPO priority application claimed in the U.S. application.

(2) Applicant must submit a copy of:
a. The allowable/patentable claim(s) from the JPO application(s) or if a copy of the allowable/patentable claims is available via the Dossier Access System (DAS) applicant may request the USPTO obtain a copy from the DAS, however if the USPTO is unable to obtain a copy from the DAS the applicant will be required to submit a copy;
b. An English translation of the allowable/patentable claim(s) and
c. A statement that the English translation is accurate;

(3) Applicant must:
a. Ensure all the claims in the U.S. application must sufficiently correspond or be amended to sufficiently correspond to the allowable/patentable claim(s) in the JPO application(s) and
b. Submit a claims correspondence table in English;

(4) Examination of the U.S. application has not begun;

(5) Applicant must submit:
a. Documentation of prior office action:
i. a copy of the office action(s)just prior to the "Decision to Grant a Patent" from each of the JPO application(s) containing the allowable/patentable claim(s) or
ii. if the allowable/patentable claims(s) are from a "Notification of Reasons for Refusal" then the Notification of Reasons for Refusal or
iii. if the JPO application is a first action allowance then no office action from the JPO is necessary should be indicated on the request/petition form;

Further, if a copy of the documents from a or b above is available via the Dossier Access System (DAS) applicant may request the USPTO obtain a copy from the DAS, however if the USPTO is unable to obtain a copy from the DAS the applicant will be required to submit a copy; b. An English language translation of the JPO Office action from (5)(a)(i)-(ii) above c. A statement that the English translation is accurate;

(6) Applicant must submit:
a. An IDS listing the documents cited by the JPO examiner in the JPO office action (unless already submitted in this application)
b. Copies of the documents except U.S. patents or U.S. patent application publications (unless already submitted in this application);

MP ~~(7) The required petition fee under 37 CFR 1.17(h).~~

The petition is **GRANTED.**

The request to participate in the PPH pilot program and petition are found to comply with the above requirements. Accordingly, the above-identified application has been accorded "special" status.

Telephone inquiries concerning this decision should be directed to Mano Padmanabhan at 571-272-4210.

All other inquiries concerning the examination or status of the application is accessible in the PAIR system at http://www.uspto.gov/ebc/index.html.

The application is being forwarded to the examiner for action on the merits commensurate with this decision.

/Mano Padmanabhan/

_____

Mano Padmanabhan
Quality Assurance Specialist, Technology Center 2100, Workgroup 2180
571-272-4210

UNITED STATES PATENT AND TRADEMARK OFFICE

Commissioner for Patents
United States Patent and Trademark Office
P.O. Box 1450
Alexandria, VA 22313-1450
www.uspto.gov

SHELL OIL COMPANY
P.O. BOX 2463
HOUSTON, TX 77252-2463

MAILED

AUG 11 2011

OFFICE OF PETITIONS

In re Application of :
Andreas Hugo Brunner, et. al. :
Application No. 12/411,512 : ON PETITION
Filed: March 26, 2009 :
Attorney Docket No. TS9641 (US) :

This is a decision on the petition under 37 CFR 1.137(b), filed June 28, 2011, to revive the above-identified application.

The application became abandoned for failure to file a reply to the Restriction/Election Requirement mailed August 25, 2010. A Notice of Abandonment was mailed on June 15, 2011.

The petition satisfies the requirements of 37 CFR 1.137(b) in that petitioner has supplied (1) the reply in the form of an amendment/election; (2) the petition fee of $1,620; and (3) an adequate statement of unintentional delay[1]. Therefore, the petition is **GRANTED**.

37 CFR 1.137(c) requires a terminal disclaimer dedicating to the public a terminal part of the term of any patent granted on the above-identified application or any patent granted on any continuing application that contains a specific reference under 35 U.S.C. 120, 121, or 365(c) to the above-identified application. Since the application is not a utility or plant application filed on or before June 8, 1995, a terminal disclaimer is not required. Accordingly, since the terminal disclaimer filed with the present petition is unnecessary, the $140 fee will be credited to petitioner's deposit account.

This application file is being referred to Technology Center Art Unit 1775 for review of the response filed with the present petition.

Telephone inquiries concerning this decision should be directed to the undersigned at (571) 272-3226.

Andrea Smith
Petitions Examiner
Office of Petitions

[1] 37 CFR 1.137(b)(3) requires a statement that the entire delay in filing the required reply from the due date for the reply until the filing of a grantable petition pursuant to 37 CFR 1.137(b) was unintentional. Since the statement contained in the instant petition varies from the language required by 37 CFR 1.137(b)(3), the statement is being construed as the statement required by 37 CFR 1.137(b)(3) and petitioner must notify the Office if this is **not** a correct interpretation of the statement.

PATENT COOPERATION TREATY

From the INTERNATIONAL SEARCHING AUTHORITY

To:
Gratton, Max Stephen
DISH NETWORK L.L.C.
Legal department
9601S Meridian Blvd
Englewood CO 80112
ETATS-UNIS D'AMERIQUE

PCT

NOTIFICATION OF TRANSMITTAL OF THE INTERNATIONAL SEARCH REPORT AND THE WRITTEN OPINION OF THE INTERNATIONAL SEARCHING AUTHORITY, OR THE DECLARATION

(PCT Rule 44.1)

Applicant's or agent's file reference P2009-01-02*	Date of mailing *(day/month/year)* 6 October 2010 (06-10-2010) **FOR FURTHER ACTION** See paragraphs 1 and 4 below
International application No. PCT/US2010/028266	International filing date *(day/month/year)* 23 March 2010 (23-03-2010)
Applicant DISH NETWORK LLC	

1. [X] The applicant is hereby notified that the international search report and the written opinion of the International Searching Authority have been established and are transmitted herewith.

   Filing of amendments and statement under Article 19:
   The applicant is entitled, if he so wishes, to amend the claims of the International Application (see Rule 46).

   When? The time limit for filing such amendments is normally two months from the date of transmittal of the International Search Report.

   Where? Directly to the International Bureau of WIPO, 34 chemin des Colombettes 1211 Geneva 20, Switzerland, Facsimile No.: (41-22) 338.82.70

   For more detailed instructions, see the notes on the accompanying sheet.

2. [ ] The applicant is hereby notified that no international search report will be established and that the declaration under Article 17(2)(a) to that effect and the written opinion of the International Searching Authority are transmitted herewith.

3. [ ] **With regard to any protest** against payment of (an) additional fee(s) under Rule 40.2, the applicant is notified that:

   [ ] the protest together with the decision thereon has been transmitted to the International Bureau together with the applicant's request to forward the texts of both the protest and the decision thereon to the designated Offices.

   [ ] no decision has been made yet on the protest; the applicant will be notified as soon as a decision is made.

4. **Reminders**

   Shortly after the expiration of **18 months** from the priority date, the international application will be published by the International Bureau. If the applicant wishes to avoid or postpone publication, a notice of withdrawal of the international application, or of the priority claim, must reach the International Bureau as provided in Rules 90*bis*.1 and 90*bis*.3, respectively, before the completion of the technical preparations for international publication.

   The applicant may submit comments on an informal basis on the written opinion of the International Searching Authority to the International Bureau. The International Bureau will send a copy of such comments to all designated Offices unless an international preliminary examination report has been or is to be established. These comments would also be made available to the public but not before the expiration of 30 months from the priority date.

   Within **19 months** from the priority date, but only in respect of some designated Offices, a demand for international preliminary examination must be filed if the applicant wishes to postpone the entry into the national phase **until 30 months** from the priority date (in some Offices even later); otherwise, the applicant must, **within 20 months** from the priority date, perform the prescribed acts for entry into the national phase before those designated Offices.

   In respect of other designated Offices, the time limit of **30 months** (or later) will apply even if no demand is filed within 19 months.

   See the Annex to Form PCT/IB/301 and, for details about the applicable time limits, Office by Office, see the *PCT Applicant's Guide*, National Chapters.

Name and mailing address of the International Searching Authority European Patent Office, P.B. 5818 Patentlaan 2 NL-2280 HV Rijswijk Tel. (+31-70) 340-2040 Fax: (+31-70) 340-3016	Authorized officer SCHALINATUS, Dana Tel: +49 (0)89 2399-8242

NOTES TO FORM PCT/ISA/220

These Notes are intended to give the basic instructions concerning the filing of amendments under article 19. The Notes are based on the requirements of the Patent Cooperation Treaty, the Regulations and the Administrative Instructions under that Treaty. In case of discrepancy between these Notes and those requirements, the latter are applicable. For more detailed information, see also the *PCT Applicant's Guide*.

In these Notes, "Article", "Rule", and "Section" refer to the provisions of the PCT, the PCT Regulations and the PCT Administrative Instructions, respectively.

INSTRUCTIONS CONCERNING AMENDMENTS UNDER ARTICLE 19

The applicant has, after having received the international search report and the written opinion of the International Searching Authority, one opportunity to amend the claims of the international application. It should however be emphasized that, since all parts of the international application (claims,description and drawings) may be amended during the international preliminary examination procedure, there is usually no need to file amendments of the claims under Article 19 except where, e.g. the applicant wants the latter to be published for the purposes of provisional protection or has another reason for amending the claims before international publication. Furthermore, it should be emphasized that provisional protection is available in some States only (see *PCT Applicant's Guide*, Annex B).

The attention of the applicant is drawn to the fact that amendments to the claims under Article 19 are not allowed where the International Searching Authority has declared, under Article 17(2), that no international search report would be established (see *PCT Applicant's Guide*, International Phase, paragraph 296).

What parts of the international application may be amended?

Under Article 19, only the claims may be amended.

During the international phase, the claims may also be amended (or further amended) under Article 34 before the International Preliminary Examining Authority. The description and drawings may only be amended under Article 34 before the International Examining Authority.

Upon entry into the national phase, all parts of the international application may be amended under Article 28 or, where applicable, Article 41.

When? Within 2 months from the date of transmittal of the international search report or 16 months from the priority date, whichever time limit expires later. It should be noted, however, that the amendments will be considered as having been received on time if they are received by the International Bureau after the expiration of the applicable time limit but before the completion of the technical preparations for international publication (Rule 46.1).

Where not to file the amendments?

The amendments may only be filed with the International Bureau and not with the receiving Office or the International Searching Authority (Rule 46.2).

Where a demand for international preliminary examination has been/is filed, see below.

How? Either by cancelling one or more entire claims, by adding one or more new claims or by amending the text of one or more of the claims as filed.

A replacement sheet or sheets containing a complete set of claims in replacement of all the claims previously filed must be submitted.

Where a claim is cancelled, no renumbering of the other claims is required. In all cases where claims are renumbered, they must be renumbered consecutively in Arabic numerals (Section 205(a)).

The amendments must be made in the language in which the international application is to be published.

What documents must/may accompany the amendments?

Letter (Section 205(b)):

The amendments must be submitted with a letter.

The letter will not be published with the international application and the amended claims. It should not be confused with the "Statement under Article 19(1)" (see below, under "Statement under Article 19(1)").

The letter must be in English or French, at the choice of the applicant. However, if the language of the international application is English, the letter must be in English; if the language of the international application is French, the letter must be in French.

SDOCID: <WO_____2010080119A1_1_>

NOTES TO FORM PCT/ISA/220 (continued)

The letter must indicate the differences between the claims as filed and the claims as amended. It must, in particular, indicate, in connection with each claim appearing in the international application (it being understood that identical indications concerning several claims may be grouped),whether

(i) the claim is unchanged;

(ii) the claim is cancelled;

(iii) the claim is new;

(iv) the claim replaces one or more claims as filed;

(v) the claim is the result of the division of a claim as filed.

The following examples illustrate the manner in which amendments must be explained in the accompanying letter:

1. [Where originally there were 48 claims and after amendment of some claims there are 51]:
"Claims 1 to 29, 31, 32, 34, 35, 37 to 48 replaced by amended claims bearing the same numbers; claims 30, 33 and 36 unchanged; new claims 49 to 51 added."

2. [Where originally there were 15 claims and after amendment of all claims there are 11]:
"Claims 1 to 15 replaced by amended claims 1 to 11."

3. [Where originally there were 14 claims and the amendments consist in cancelling some claims and in adding new claims]:
"Claims 1 to 6 and 14 unchanged; claims 7 to 13 cancelled; new claims 15, 16 and 17 added." or
"Claims 7 to 13 cancelled; new claims 15, 16 and 17 added; all other claims unchanged."

4. [Where various kinds of amendments are made]:
"Claims 1-10 unchanged; claims 11 to 13, 18 and 19 cancelled; claims 14, 15 and 16 replaced by amended claim 14; claim 17 subdivided into amended claims 15, 16 and 17; new claims 20 and 21 added."

"Statement under article 19(1)" (Rule 46.4)

The amendments may be accompanied by a statement explaining the amendments and indicating any impact that such amendments might have on the description and the drawings (which cannot be amended under Article 19(1)).

The statement will be published with the international application and the amended claims.

It must be in the language in which the international application is to be published.

It must be brief, not exceeding 500 words if in English or if translated into English.

It should not be confused with and does not replace the letter indicating the differences between the claims as filed and as amended. It must be filed on a separate sheet and must be identified as such by a heading, preferably by using the words "Statement under Article 19(1)."

It may not contain any disparaging comments on the international search report or the relevance of citations contained in that report. Reference to citations, relevant to a given claim, contained in the international search report may be made only in connection with an amendment of that claim.

Consequence if a demand for international preliminary examination has already been filed

If, at the time of filing any amendments and any accompanying statement, under Article 19, a demand for international preliminary examination has already been submitted, the applicant must preferably, at the time of filing the amendments (and any statement) with the International Bureau, also file with the International Preliminary Examining Authority a copy of such amendments (and of any statement) and, where required, a translation of such amendments for the procedure before that Authority (see Rules 55.3(a) and 62.2, first sentence). For further information, see the Notes to the demand form (PCT/IPEA/401).

If a demand for international preliminary examination is made, the written opinion of the International Searching Authority will, except in certain cases where the International Preliminary Examining Authority did not act as International Searching Authority and where it has notified the International Bureau under Rule 66.1*bis*(b), be considered to be a written opinion of the International Preliminary Examining Authority. If a demand is made, the applicant may submit to the International Preliminary Examining Authority a reply to the written opinion together, where appropriate, with amendments before the expiration of 3 months from the date of mailing of Form PCT/ISA/220 or before the expiration of 22 months from the priority date, whichever expires later (Rule 43*bis*.1(c)).

Consequence with regard to translation of the international application for entry into the national phase

The applicant's attention is drawn to the fact that, upon entry into the national phase, a translation of the claims as amended under Article 19 may have to be furnished to the designated/elected Offices, instead of, or in addition to, the translation of the claims as filed.

For further details on the requirements of each designated/elected Office, see the *PCT Applicant's Guide*, National Chapters.

NSDOCID: <KS_____201006011P4_I_>

PATENT COOPERATION TREATY

PCT

INTERNATIONAL SEARCH REPORT

(PCT Article 18 and Rules 43 and 44)

Applicant's or agent's file reference	FOR FURTHER ACTION	see Form PCT/ISA/220 as well as, where applicable, item 5 below.
P2009-01-02*		
International application No.	International filing date *(day/month/year)*	(Earliest) Priority Date *(day/month/year)*
PCT/US2010/028266	23/03/2010	26/03/2009
Applicant		
DISH NETWORK LLC		

This international search report has been prepared by this International Searching Authority and is transmitted to the applicant according to Article 18. A copy is being transmitted to the International Bureau.

This international search report consists of a total of 4 sheets.

[X] It is also accompanied by a copy of each prior art document cited in this report.

1. **Basis of the report**
   a. With regard to the **language**, the international search was carried out on the basis of:
      [X] the international application in the language in which it was filed
      [ ] a translation of the international application into _____, which is the language of a translation furnished for the purposes of international search (Rules 12.3(a) and 23.1(b))
   b. [ ] This international search report has been established taking into account the **rectification of an obvious mistake** authorized by or notified to this Authority under Rule 91 (Rule 43.6*bis*(a)).
   c. [ ] With regard to any **nucleotide and/or amino acid sequence** disclosed in the international application, see Box No. I.

2. [ ] **Certain claims were found unsearchable** (See Box No. II)

3. [ ] **Unity of invention is lacking** (see Box No III)

4. With regard to the **title**,
   [X] the text is approved as submitted by the applicant
   [ ] the text has been established by this Authority to read as follows:

5. With regard to the **abstract**,
   [X] the text is approved as submitted by the applicant
   [ ] the text has been established, according to Rule 38.2(b), by this Authority as it appears in Box No. IV. The applicant may, within one month from the date of mailing of this international search report, submit comments to this Authority

6. With regard to the **drawings**,
   a. the figure of the **drawings** to be published with the abstract is Figure No. 3
      [X] as suggested by the applicant
      [ ] as selected by this Authority, because the applicant failed to suggest a figure
      [ ] as selected by this Authority, because this figure better characterizes the invention
   b. [ ] none of the figures is to be published with the abstract

INTERNATIONAL SEARCH REPORT

International application No
PCT/US2010/028266

A. CLASSIFICATION OF SUBJECT MATTER
INV. H04N5/76 H04N5/781
ADD.

According to International Patent Classification (IPC) or to both national classification and IPC

B. FIELDS SEARCHED

Minimum documentation searched (classification system followed by classification symbols)
H04N

Documentation searched other than minimum documentation to the extent that such documents are included in the fields searched

Electronic data base consulted during the international search (name of data base and, where practical, search terms used)
EPO-Internal

C. DOCUMENTS CONSIDERED TO BE RELEVANT

Category*	Citation of document, with indication, where appropriate, of the relevant passages	Relevant to claim No.
X	EP 1 768 399 A2 (BRITISH SKY BROADCASTING LTD) 28 March 2007 (2007-03-28)	1,12
Y	paragraph [0018] - paragraph [0020]	2,13
A	paragraph [0035]	3-11,
	paragraph [0039]	14-21
	paragraph [0052]	
	paragraph [0059]	
	paragraph [0078]	
	page 90	
	figures 1,2	

-/--

[X] Further documents are listed in the continuation of Box C. [X] See patent family annex.

* Special categories of cited documents :

"A" document defining the general state of the art which is not considered to be of particular relevance

"E" earlier document but published on or after the international filing date

"L" document which may throw doubts on priority claim(s) or which is cited to establish the publication date of another citation or other special reason (as specified)

"O" document referring to an oral disclosure, use, exhibition or other means

"P" document published prior to the international filing date but later than the priority date claimed

"T" later document published after the international filing date or priority date and not in conflict with the application but cited to understand the principle or theory underlying the invention

"X" document of particular relevance; the claimed invention cannot be considered novel or cannot be considered to involve an inventive step when the document is taken alone

"Y" document of particular relevance; the claimed invention cannot be considered to involve an inventive step when the document is combined with one or more other such documents, such combination being obvious to a person skilled in the art.

"&" document member of the same patent family

Date of the actual completion of the international search	Date of mailing of the international search report
30 September 2010	06/10/2010

Name and mailing address of the ISA/	Authorized officer
European Patent Office, P.B. 5818 Patentlaan 2 NL - 2280 HV Rijswijk Tel. (+31-70) 340-2040, Fax: (+31-70) 340-3016	Fragua, Miguel Angel

2

Form PCT/ISA/210 (second sheet) (April 2005)

INTERNATIONAL SEARCH REPORT

International application No
PCT/US2010/028266

C(Continuation). DOCUMENTS CONSIDERED TO BE RELEVANT

Category*	Citation of document, with indication, where appropriate, of the relevant passages	Relevant to claim No.
X	WO 03/034426 A1 (KONINKL PHILIPS ELECTRONICS NV) 24 April 2003 (2003-04-24)	4-7,9, 15,17, 18,21
Y	page 3, line 12 - line 24	2,13
A	page 4, line 24 - page 5, line 23 page 5, line 33 - page 8, line 9 page 8, line 32 - page 10, line 13 figures 2-5	3,8, 10-12, 14,16, 19,20
A	US 2006/120688 A1 (UCHIDA) 8 June 2006 (2006-06-08) paragraph [0005] paragraph [0008] - paragraph [0013] paragraph [0031] - paragraph [0036] figures 1, 3, 4	1-21

Form PCT/ISA/210 (continuation of second sheet) (April 2005)

INTERNATIONAL SEARCH REPORT

Information on patent family members

International application No
PCT/US2010/028266

Patent document cited in search report	Publication date	Patent family member(s)	Publication date
EP 1768399 A2	28-03-2007	NONE	
WO 03034426 A1	24-04-2003	JP 2005506021 T	24-02-2005
		US 2003072559 A1	17-04-2003
US 2006120688 A1	08-06-2006	JP 2006166054 A	22-06-2006

PATENT COOPERATION TREATY

From the
INTERNATIONAL SEARCHING AUTHORITY

To:

see form PCT/ISA/220

PCT

WRITTEN OPINION OF THE INTERNATIONAL SEARCHING AUTHORITY
(PCT Rule 43*bis*.1)

Date of mailing
(day/month/year) see form PCT/ISA/210 (second sheet)

Applicant's or agent's file reference
see form PCT/ISA/220

FOR FURTHER ACTION
See paragraph 2 below

International application No.	International filing date *(day/month/year)*	Priority date *(day/month/year)*
PCT/US2010/028266	23.03.2010	26.03.2009

International Patent Classification (IPC) or both national classification and IPC
INV. H04N5/76 H04N5/781

Applicant
DISH NETWORK LLC

1. This opinion contains indications relating to the following items:

- ☑ Box No. I Basis of the opinion
- ☐ Box No. II Priority
- ☐ Box No. III Non-establishment of opinion with regard to novelty, inventive step and industrial applicability
- ☐ Box No. IV Lack of unity of invention
- ☑ Box No. V Reasoned statement under Rule 43*bis*.1(a)(i) with regard to novelty, inventive step and industrial applicability; citations and explanations supporting such statement
- ☐ Box No. VI Certain documents cited
- ☐ Box No. VII Certain defects in the international application
- ☐ Box No. VIII Certain observations on the international application

2. **FURTHER ACTION**

If a demand for international preliminary examination is made, this opinion will usually be considered to be a written opinion of the International Preliminary Examining Authority ("IPEA") except that this does not apply where the applicant chooses an Authority other than this one to be the IPEA and the chosen IPEA has notified the International Bureau under Rule 66.1*bis*(b) that written opinions of this International Searching Authority will not be so considered.

If this opinion is, as provided above, considered to be a written opinion of the IPEA, the applicant is invited to submit to the IPEA a written reply together, where appropriate, with amendments, before the expiration of 3 months from the date of mailing of Form PCT/ISA/220 or before the expiration of 22 months from the priority date, whichever expires later.

For further options, see Form PCT/ISA/220.

3. For further details, see notes to Form PCT/ISA/220.

Name and mailing address of the ISA:	Date of completion of this opinion	Authorized Officer
European Patent Office D-80298 Munich Tel. +49 89 2399 - 0 Fax: +49 89 2399 - 4465	see form PCT/ISA/210	Fragua, Miguel Angel Telephone No. +49 89 2399-5675

Box No. I Basis of the opinion

1. With regard to the **language**, this opinion has been established on the basis of:

   ☑ the international application in the language in which it was filed

   ☐ a translation of the international application into , which is the language of a translation furnished for the purposes of international search (Rules 12.3(a) and 23.1 (b)).

2. ☐ This opinion has been established taking into account the **rectification of an obvious mistake** authorized by or notified to this Authority under Rule 91 (Rule 43bis.1(a))

3. With regard to any **nucleotide and/or amino acid sequence** disclosed in the international application, this opinion has been established on the basis of a sequence listing filed or furnished:

   a. (means)

      ☐ on paper

      ☐ in electronic form

   b. (time)

      ☐ in the international application as filed

      ☐ together with the international application in electronic form

      ☐ subsequently to this Authority for the purposes of search

4. ☐ In addition, in the case that more than one version or copy of a sequence listing has been filed or furnished, the required statements that the information in the subsequent or additional copies is identical to that in the application as filed or does not go beyond the application as filed, as appropriate, were furnished.

5. Additional comments:

Box No. V Reasoned statement under Rule 43*bis*.1(a)(i) with regard to novelty, inventive step or industrial applicability; citations and explanations supporting such statement

1. Statement

Novelty (N)	Yes:	Claims	2, 3, 8, 10, 11, 13, 14, 16, 19, 20
	No:	Claims	1, 4-7, 9, 12, 15, 17, 18, 21
Inventive step (IS)	Yes:	Claims	3, 8, 10, 11, 14, 16, 19, 20
	No:	Claims	1, 2, 4-7, 9, 12, 13, 15, 17, 18, 21
Industrial applicability (IA)	Yes:	Claims	1-21
	No:	Claims	

2. Citations and explanations

see separate sheet

Re Item V.

1 Reference is made to the following documents:

D1 EP 1 768 399 A2 (BRITISH SKY BROADCASTING LTD) 28 March 2007 (2007-03-28)

D2 WO 03/034426 A1 (KONINKL PHILIPS ELECTRONICS NV) 24 April 2003 (2003-04-24)

D3 US 2006/120688 A1 (UCHIDA) 8 June 2006 (2006-06-08)

2 INDEPENDENT CLAIM 1

The present application does not meet the criteria of Article 33 (1) PCT, because the subject-matter of claim 1 is not new in the sense of Article 33(2) PCT. Document D1 discloses (the references in parentheses applying to this document):

A method for recording multiple television programs (paragraph [0001]), the method comprising:

- identifying a first recording timer on a digital video recorder, the first recording timer associated with a channel and having a first beginning time and a first ending time (paragraphs [0032]-[0033]);

- identifying a second recording timer on the digital video recorder, the second recording timer associated with the channel and having a second beginning time and a second ending time (paragraphs [0032]- [0033]), the second beginning time occurring temporally before the first ending time and the second ending time occurring temporally after the first ending time (paragraph [0078]);

- receiving a video stream using a tuner of the digital video recorder (paragraph [0039]);

- recording the video stream between the first beginning time and the first ending time into a first tile (lines 6-9 of paragraph [0039] together with paragraph [0052] and with paragraph [0018]); and

- recording the video stream between the second beginning time and the second ending time into a second file (lines 6-9 of paragraph [0039] together with paragraph [0052] and with paragraph [0018]).

3 INDEPENDENT CLAIM 4

Document D2 discloses (the references in parentheses applying to this document):

A method for recording multiple television programs (page 4, lines 17-23), the method comprising:

- identifying a first recording timer on a digital video recorder, the first recording timer associated with a channel and having a first beginning time and a first ending time (page 4, lines 19-20);

- identifying a second recording timer on the digital video recorder, the second recording timer associated with the channel and having a second beginning time and a second ending time (page 4, lines 20-21), the second beginning time occurring temporally before the first ending time and the second ending time occurring temporally after the first ending time (page 9, lines 1-8);

- identifying a temporal overlap between the second beginning time and the second ending time (page 9, lines 15-18);

- identifying a dividing time within the temporal overlap (page 9, lines 18-23);

- receiving a video stream using a tuner of the digital video recorder (Fig. 3b; page 5, lines 6-16);

- recording the video stream between the first beginning time and the dividing time into a first file (page 7, lines 5-8, together with page 10, lines 15-20);

- recording the video stream, between the dividing time and the second ending time into a second file (page 7, lines 5-8, together with page 10, lines 15-20); and

- associating a first portion of the first file, corresponding with the first beginning time and the dividing time, with the second file (page 9, lines 15-23: the dividing time is determined by the associated begin/end recording parameters of two adjacent programs).

Therefore, the subject-matter of claim 1 is not new in the sense of Article 33(2) PCT.

4 INDEPENDENT CLAIMS 12 AND 15

Independent claims 13 and 15 define the apparatuses that perform the methods described in claims 1 and 4 respectively. The objections regarding novelty raised in points 2 and 3 of the present written opinion against claims 1 and 4, apply to claims 12 and 15 accordingly.

5 DEPENDENT CLAIMS 2, 5-7, 9, 13, 17, 18, 21.

Dependent claims 2, 5-7, 9, 13, 17, 18 do not contain any features which, in combination with the features of any claim to which they refer, meet the requirements of the PCT in respect of a novelty and/or inventive step (Article 33(2) and (3) PCT).

For instance the features defined in claims 2 and 13 are known from document D2 (D2: page 4, lines 24-30; Fig. 2) in combination with document D1.

The feature defined in claim 5 is known from document D2 (D2: page 4, lines 24-30; Fig. 2).

The features defined in claims 6, 7, 9, 17, 18 and 21 are known from document D2 (D2: page 9, lines 15-23).

6 DEPENDENT CLAIMS 3, 8, 10, 11, 14, 16, 19, 20.

The features of dependent claims 3, 8, 10, 11, 14, 16, 19, 20 are neither described nor suggested in the prior art documents D1-D3 available at the moment of issuing the International Search Report.

7 INDUSTRIAL APPLICABILITY

No objections.

Possible steps after receipt of the international search report (ISR) and written opinion of the International Searching Authority (WO-ISA)

General information	For all international applications filed on or after 01/01/2004 the competent ISA will establish an ISR. It is accompanied by the WO-ISA. Unlike the former written opinion of the IPEA (Rule 66.2 PCT), the WO-ISA is not meant to be responded to, but to be taken into consideration for further procedural steps. This document explains about the possibilities.
Amending claims under Art. 19 PCT	Within 2 months after the date of mailing of the ISR and the WO-ISA the applicant may file amended claims under Art. 19 PCT directly with the International Bureau of WIPO. The PCT reform of 2004 did not change this procedure. For further information please see Rule 46 PCT as well as form PCT/ISA/220 and the corresponding Notes to form PCT/ISA/220.
Filing a demand for international preliminary examination	In principle, the WO-ISA will be considered as the written opinion of the IPEA. This should, in many cases, make it unnecessary to file a demand for international preliminary examination. If the applicant nevertheless wishes to file a demand this must be done before expiry of 3 months after the date of mailing of the ISR/WO-ISA or 22 months after priority date, whichever expires later (Rule 54bis PCT). Amendments under Art. 34 PCT can be filed with the IPEA as before, normally at the same time as filing the demand (Rule 66.1 (b) PCT). If a demand for international preliminary examination is filed and no comments/amendments have been received the WO-ISA will be transformed by the IPEA into an IPRP (International Preliminary Report on Patentability) which would merely reflect the content of the WO-ISA. The demand can still be withdrawn (Art. 37 PCT).
Filing informal comments	After receipt of the ISR/WO-ISA the applicant may file informal comments on the WO-ISA directly with the International Bureau of WIPO. These will be communicated to the designated Offices together with the IPRP (International Preliminary Report on Patentability) at 30 months from the priority date. Please also refer to the next box.
End of the international phase	At the end of the international phase the International Bureau of WIPO will transform the WO-ISA or, if a demand was filed, the written opinion of the IPEA into the IPRP, which will then be transmitted together with possible informal comments to the designated Offices. The IPRP replaces the former IPER (international preliminary examination report).
Relevant PCT Rules and more information	Rule 43 PCT, Rule 43bis PCT, Rule 44 PCT, Rule 44bis PCT, PCT Newsletter 12/2003, OJ 11/2003, OJ 12/2003

PCT Application Claims as Filed

1. A method for recording multiple television programs, the method comprising:

identifying a first recording timer on a digital video recorder, the first recording timer associated with a channel and having a first beginning time and a first ending time;

identifying a second recording timer on the digital video recorder, the second recording timer associated with the channel and having a second beginning time and a second ending time, the second beginning time occurring temporally before the first ending time and the second beginning time occurring temporally after the first ending time;

receiving a video stream using a tuner of the digital video recorder;

recording the video stream between the first beginning time and the first ending time into a first file; and

recording the video stream between the second beginning time and the second ending time into a second file.

2. The method of claim 1, wherein the first recording timer is associated with a first television program broadcast during a first time slot, wherein the first ending time occurs after an ending of the first time slot and wherein the second recording timer is associated with a second television program, broadcast during a second time slot, wherein the second beginning time occurs before a start of the second time slot.

3. The method of claim 1, wherein recording the video stream to the first file and recording the video stream to the second file further comprise:

recording the video stream between the first beginning time and the first ending time into the first file;

recording the video stream between the first ending time and the second ending time into the second file; and

copying a portion of the first file, corresponding with the video stream between the second beginning time and the first ending time, to the second file after the second ending time.

4. A method for recording multiple television programs, the method comprising:

identifying a first recording timer on a digital video recorder, the first recording timer associated with a channel and having a first beginning time and a first ending time;

identifying a second recording timer on the digital video recorder, the second recording timer associated with the channel and having a second beginning time and a second ending time, the second beginning time occurring temporally before the first ending time and the second ending time occurring temporally after the first ending time;

identifying a temporal overlap between the second beginning time and the second ending time;

identifying a dividing time within the temporal overlap;

receiving a video stream using a tuner of the digital video recorder;

recording the video stream between the first beginning time and the dividing time into a first file;

recording the video stream between the dividing time and the second ending time into a second file; and

associating a first portion of the first file, corresponding with the first beginning time and the dividing time, with the second file.

5. The method of claim 4, wherein the first recording timer is associated with a first television program broadcast during a first time slot, wherein the first ending time occurs after an ending of the first time slot and wherein the second recording timer is associated with a second television program, broadcast during a second time slot, wherein the second beginning time occurs before a start of the second time slot.

6. The method of claim 4, wherein the dividing time corresponds with the ending of the first time slot.

7. The method of claim 4, further comprising:

associating a first portion of the second file corresponding with the dividing time and the ending time with the second file.

8. The method of claim 7, further comprising:

receiving input requesting playback of a television program associated with the second file;

outputting first video content corresponding with the first portion of the first file from the digital video recorder responsive to the input; and

outputting second video content corresponding with the second file from the digital video recorder after completing the output of the first video content.

9. The method of claim 4, wherein the dividing time corresponds with the first ending time.

10. The method of claim 4, further comprising:

receiving input requesting to delete the first file;

determining whether the second file has been deleted; and

deleting a second portion of the first file responsive to determining that the second file has not been deleted, wherein the first portion of the first file is retained on the digital video recorder until the second file is deleted.

11. The method of claim 4, wherein associating the portion of the first file further comprises:

generating a pointer, to the first portion of the first file, in the second file, the pointer specifying playback of the first portion of the first file prior to playback of the video content of the second file.

12. A digital video recorder comprising:

a storage medium;

a communication interface operable to receive a video stream associated with a channel;

control logic communicatively coupled to the storage medium and the communication interface, the control logic operable to:

identify a first recording timer associated with the channel and having a first beginning time and a first ending time;

identify a second recording timer associated with the channel and having a second beginning time and a second ending time, the second beginning time occurring temporally before the first ending time and the second ending time occurring temporally after the first ending time;

record the video stream into a first file of the storage medium between the first beginning time and the first ending time; and

record the video stream into a second file of the storage medium between the second beginning time and the second ending time.

13. The digital video recorder of claim 12, wherein the first recording timer is associated with a first television program broadcast during a first time slot, wherein the first ending time occurs after an ending of the first time slot and wherein the second recording timer is associated with a second television program, broadcast during a second time slot, wherein the second beginning time occurs before a start of the second time slot.

14. The digital video recorder of claim 12, wherein the control logic is further operable to:

record the video stream between the first beginning time and the first ending time into the first file;

record the video stream between the first ending time and the second ending time into the second file; and

copy a portion of the first file, corresponding with the video stream between the second beginning time and the first ending time, to the second file after second ending time.

15. A digital video recorder comprising:

a storage medium;

a communication interface operable to receive a video stream associated with a channel;

control logic communicatively coupled to the storage medium and the communication interface, the control logic operable to:

identify a first recording timer associated with the channel and having a first beginning time and a first ending time;

identify a second recording timer associated with the channel and having a second beginning time and a second ending time, the second beginning time occurring temporally before the first ending time and the second ending time occurring temporally after the first ending time;

identify a temporal overlap between the second beginning time and the second ending time;

identify a dividing time within the temporal overlap;

record the video stream between the first beginning time and the dividing time into a first file;

record the video stream between the dividing time and the second ending time into a second file; and

associate a first portion of the first file, corresponding with the temporal overlap of the first and second recording timers, with the second file.

16. The digital video recorder of claim 15, wherein the control logic is further operable to:

receive input requesting playback of a television program associated with the second file;

output first video content corresponding with the first portion of the first file from the digital video recorder responsive to the input; and

output second video content corresponding with the second file from the digital video recorder after completing the output of the first video content.

17. The digital video recorder of claim 15, wherein the dividing time corresponds with the ending of the first time slot.

18. The digital video recorder of claim 17, wherein the control logic is further operable to associate a first portion of the second file, corresponding with the dividing time and the ending time, with the second file.

19. The digital video recorder of claim 15, wherein the control logic is further operable to:

receive input requesting to delete the first file;

determine whether the second file has been deleted; and

delete a second portion of the first file responsive to determining that the second file has not been deleted, wherein the first portion of the first file is retained on the digital video recorder until the second file is deleted.

20. The digital video recorder of claim 15, wherein the control logic is further operable to:

generate a pointer to the first portion of the first file in the second file, the pointer specifying playback of the portion of the first file prior to playback of the video content of the second file.

21. The digital video recorder of claim of claim 15, wherein the dividing time corresponds with the first ending time.

Doc Code: PPH.PCT.652
Document Description: Petition to make special under PCT-Patent Pros Hwy

PTO/SB/20PCT-EP (05-10)
Approved for use through 01/31/2012. OMB 0651-0058
U.S. Patent and Trademark Office; U. S. DEPARTMENT OF COMMERCE
Under the Paperwork Reduction Act of 1995, no persons are required to respond to a collection of information unless it displays a valid OMB control number.

REQUEST FOR PARTICIPATION IN THE PATENT COOPERATION TREATY - PATENT PROSECUTION HIGHWAY (PCT-PPH) PILOT PROGRAM BETWEEN THE EUROPEAN PATENT OFFICE (EPO) AND THE USPTO

Application No:	12411521	Filing date:	26 March 2009
First Named Inventor:	Gratton, Max Stephen		
Title of the Invention:	Apparatus and Methods for Recording Adjacent Time Slots of Television Programming on the Same Channel		

THIS REQUEST FOR PARTICIPATION IN THE PCT-PPH PILOT PROGRAM ALONG WITH THE REQUIRED DOCUMENTS MUST BE SUBMITTED VIA EFS-WEB. INFORMATION REGARDING EFS-WEB IS AVAILABLE AT HTTP://WWW.USPTO.GOV/EBC/EFS_HELP.HTML

APPLICANT HEREBY REQUESTS PARTICIPATION IN THE PCT-PPH PROGRAM AND PETITIONS TO MAKE THE ABOVE-IDENTIFIED APPLICATION SPECIAL UNDER THE PCT-PPH PROGRAM.

The above-identified application is (1) a national stage entry of the corresponding PCT application, or (2) a national stage entry of another PCT application which claims priority to the corresponding PCT application, or (3) a national application that claims domestic/ foreign priority to the corresponding PCT application, or (4) a national application which forms the basis for the priority claim in the corresponding PCT application, or (5) a continuing application of a U.S. application that satisfies one of (1) to (4) above, or (6) a U.S. application that claims domestic benefit to a U.S. provisional application which forms the basis for the priority claim in the corresponding PCT application.

The corresponding PCT application number(s) is/are: PCT/US2010/028266

The international filing date of the corresponding PCT application(s) is/are: 23 March 2010

I. List of Required Documents:

a. **A copy of the latest international work product (WO/ISA, WO/IPEA, or IPER) in the above–identified corresponding PCT application(s)**

☒ Is attached

☐ Is not attached because the document is already in the U.S. application.

b. **A copy of all claims which were indicated as having novelty, inventive step and industrial applicability in the above-identified corresponding PCT application(s).**

☒ Is attached.

☐ Is not attached because the document is already in the U.S. application.

c. **English translations of the documents in a. and b. above are attached (if the documents are not in the English language). A statement that the English translation is accurate is attached for the document in b. above.**

This collection of information is required by 35 U.S.C. 119, 37 CFR 1.55, and 37 CFR 1.102(d). The information is required to obtain or retain a benefit by the public, which is to file (and by the USPTO to process) an application. Confidentiality is governed by 35 U.S.C. 122 and 37 CFR 1.11 and 1.14. This collection is estimated to take 2 hours to complete, including gathering, preparing, and submitting the completed application form to the USPTO. Time will vary depending upon the individual case. Any comments on the amount of time you require to complete this form and/or suggestions for reducing this burden should be sent to the Chief Information Officer, U.S. Patent and Trademark Office, U.S. Department of Commerce, P.O. Box 1450, Alexandria, VA 22313-1450. DO NOT SEND FEES OR COMPLETED FORMS TO THIS ADDRESS.

PTO/SB/20PCT-EP (05-10)
Approved for use through 01/31/2012. OMB 0651-0058
U.S.Patent and Trademark Office; U.S. DEPARTMENT OF COMMERCE
Under the Paperwork Reduction Act of 1995, no persons are required to respond to a collection of information unless it displays a valid OMB control number.

REQUEST FOR PARTICIPATION IN THE PCT-PPH PILOT PROGRAM BETWEEN THE EPO AND THE USPTO

(continued)

Application No.:	12411521
First Named Inventor:	Grattton, Max Stephen

d. **(1) An information disclosure statement listing the documents cited in the international work products (ISR, WO/ISA, WO/IPEA, IPER) of the corresponding PCT application.**

☒ Is attached

☐ Has already been filed in the above-identified U.S. application on _____

(2) Copies of all documents (except) for U.S. patents or U.S. patent application publications)

☒ Are attached.

☐ Have already been filed in the above-identified U.S. application on _____

II. Claims Correspondence Table:

Claims in US Application	Patentable Claims in the corresponding PCT Application	Explanation regarding the correspondence
1	3	Claim was amended to include patentable limitations of PCT claim 3.
2	2	Claim depends on amended claim 1.
4	11	Claim was amended to include patentable limitations of PCT claim 11.
5 -10	5 -10	Claims depend on amended claim 4.
12	14	Claim was amended to include patentable limitations of PCT claim 14.
13	13	Claim depends on amended claim 12.
15	16	Claim was amended to include patentable limitations of PCT claim 16.
17-21	17-21	Claims depend on amended claim 15.

III. All the claims in the US application sufficiently correspond to the patentable claims in the corresponding PCT application.

Signature	Date 2 December 2010
Name (Print/Typed) Benjamin D. Roberts	Registration Number 64,541

Privacy Act Statement

The **Privacy Act of 1974 (P.L. 93-579)** requires that you be given certain information in connection with your submission of the attached form related to a patent application or patent. Accordingly, pursuant to the requirements of the Act, please be advised that: (1) the general authority for the collection of this information is 35 U.S.C. 2(b)(2); (2) furnishing of the information solicited is voluntary; and (3) the principal purpose for which the information is used by the U.S. Patent and Trademark Office is to process and/or examine your submission related to a patent application or patent. If you do not furnish the requested information, the U.S. Patent and Trademark Office may not be able to process and/or examine your submission, which may result in termination of proceedings or abandonment of the application or expiration of the patent.

The information provided by you in this form will be subject to the following routine uses:

1. The information on this form will be treated confidentially to the extent allowed under the Freedom of Information Act (5 U.S.C. 552) and the Privacy Act (5 U.S.C 552a). Records from this system of records may be disclosed to the Department of Justice to determine whether disclosure of these records is required by the Freedom of Information Act.
2. A record from this system of records may be disclosed, as a routine use, in the course of presenting evidence to a court, magistrate, or administrative tribunal, including disclosures to opposing counsel in the course of settlement negotiations.
3. A record in this system of records may be disclosed, as a routine use, to a Member of Congress submitting a request involving an individual, to whom the record pertains, when the individual has requested assistance from the Member with respect to the subject matter of the record.
4. A record in this system of records may be disclosed, as a routine use, to a contractor of the Agency having need for the information in order to perform a contract. Recipients of information shall be required to comply with the requirements of the Privacy Act of 1974, as amended, pursuant to 5 U.S.C. 552a(m).
5. A record related to an International Application filed under the Patent Cooperation Treaty in this system of records may be disclosed, as a routine use, to the International Bureau of the World Intellectual Property Organization, pursuant to the Patent Cooperation Treaty.
6. A record in this system of records may be disclosed, as a routine use, to another federal agency for purposes of National Security review (35 U.S.C. 181) and for review pursuant to the Atomic Energy Act (42 U.S.C. 218(c)).
7. A record from this system of records may be disclosed, as a routine use, to the Administrator, General Services, or his/her designee, during an inspection of records conducted by GSA as part of that agency's responsibility to recommend improvements in records management practices and programs, under authority of 44 U.S.C. 2904 and 2906. Such disclosure shall be made in accordance with the GSA regulations governing inspection of records for this purpose, and any other relevant (*i.e.*, GSA or Commerce) directive. Such disclosure shall not be used to make determinations about individuals.
8. A record from this system of records may be disclosed, as a routine use, to the public after either publication of the application pursuant to 35 U.S.C. 122(b) or issuance of a patent pursuant to 35 U.S.C. 151. Further, a record may be disclosed, subject to the limitations of 37 CFR 1.14, as a routine use, to the public if the record was filed in an application which became abandoned or in which the proceedings were terminated and which application is referenced by either a published application, an application open to public inspection or an issued patent.
9. A record from this system of records may be disclosed, as a routine use, to a Federal, State, or local law enforcement agency, if the USPTO becomes aware of a violation or potential violation of law or regulation.

UNITED STATES PATENT AND TRADEMARK OFFICE

UNITED STATES DEPARTMENT OF COMMERCE
United States Patent and Trademark Office
Address: COMMISSIONER FOR PATENTS
P.O. Box 1450
Alexandria, Virginia 22313-1450
www.uspto.gov

APPLICATION NO.	FILING DATE	FIRST NAMED INVENTOR	ATTORNEY DOCKET NO.	CONFIRMATION NO.
12/411,521	03/26/2009	Max Stephen Gratton	P2009-02-01	5327

80491 7590 02/01/2011

DISH Network L.L.C.
9601 S. Meridian Blvd
Englewood, CO 80112

EXAMINER	
TRAN, THAI Q	
ART UNIT	PAPER NUMBER
2484	
MAIL DATE	DELIVERY MODE
02/01/2011	PAPER

Please find below and/or attached an Office communication concerning this application or proceeding.

The time period for reply, if any, is set in the attached communication.

UNITED STATES PATENT AND TRADEMARK OFFICE

Commissioner for Patents
United States Patent and Trademark Office
P.O. Box 1450
Alexandria, VA 22313-1450
www.uspto.gov

MAILED

FEB 02 2011

DIRECTOR OFFICE
TECHNOLOGY CENTER 2400

DISH NETWORK L.L.C.
9601 S. MERIDIAN BLVD
ENGLEWOOD, CO 80112

In re Application of
GRATTON, MAX STEPHEN
Application No. 12/411,521
Filed: March 26, 2009
Attorney Docket No. **P2009-02-01**

DECISION ON REQUEST TO PARTICIPATE IN PATENT PROSECUTION HIGHWAY PROGRAM AND PETITION TO MAKE SPECIAL UNDER 37 CFR 1.102(d)

This is a decision on the request to participate in the PCT Patent Prosecution Highway (PPH) pilot program and the petition under 37 CFR 1.102(d), filed December 2, 2010 to make the above-identified application special.

The request and petition are **GRANTED**.

A grantable request to participate in the PCT-PPH pilot program and petition to make special require:

(1) The U.S. application be (a) a national stage entry of the corresponding PCT application, or (b) a national stage entry of another PCT application which claims priority to the corresponding PCT application, or (c) a national stage application that claims domestic/foreign priority to the corresponding PCT application, (d) a national application which forms the basis for the priority claim in the corresponding PCT application, or (e) a continuation application of the U.S. application which satisfies one of the above (a) to (d) scenarios.
(2) A copy of the latest international work product (WO/ISA, WO/IPEA, or IPER) in the corresponding PCT application(s) which indicates at least one claim in the PCT application has novelty, inventive step, and industrial applicability.
(3) A copy of all claims which were indicated as having novelty, inventive step and industrial applicability in the corresponding PCT application(s).
(4) English translations of the documents in (2) and (3) (if the documents are not in the English language).
(5) All the claims in the U.S. application must sufficiently correspond or be amended to sufficiently correspond to the claims which were indicated as having novelty, inventive step, and industrial applicability in the corresponding PCT application(s).
(6) Examination of the U.S. application has not begun;
(7) An information disclosure statement listing the documents cited in the international work products (ISR, WO/ISA. WO/IPEA, IPER) of the corresponding PCT application(s) and
(8) The petition fee under 37 CFR 1.17(h).

The request to participate in the PCT-PPH pilot program and petition comply with the above requirements. Accordingly, the above-identified application has been accorded "special" status.

Telephone inquiries concerning this decision should be directed to Mehrdad Dastouri at 571-272-7418.

All other inquiries concerning the examination or status of the application should be directed to Patent Application Information Retrieval (PAIR) system.

The application is being forwarded to the examiner for action on the merits commensurate with this decision.

/Mehrdad Dastouri/

Mehrdad Dastouri
Quality Assurance Specialist
Technology Center 2400

UNITED STATES PATENT AND TRADEMARK OFFICE

UNITED STATES DEPARTMENT OF COMMERCE
United States Patent and Trademark Office
Address: COMMISSIONER FOR PATENTS
P.O. Box 1450
Alexandria, Virginia 22313-1450
www.uspto.gov

APPLICATION NO.	FILING DATE	FIRST NAMED INVENTOR	ATTORNEY DOCKET NO.	CONFIRMATION NO.
12/411,578	03/26/2009	Takahito Yamanaka	P08-1046	5438

7590 04/04/2012

Toshiyuki Yokoi
13700 Marina Pointe Drive
Unit 723
Marina del Rey, CA 90292

EXAMINER	
LI, TRACY Y	

ART UNIT	PAPER NUMBER
2487	

NOTIFICATION DATE	DELIVERY MODE
04/04/2012	ELECTRONIC

DECISION GRANTING PETITION UNDER 37 CFR 1.138(d)

The declaration of express abandonment is recognized

This is in response to the petition under 37 CFR 1.138(d), requesting for a refund of any previously paid search fee and excess claims fee in the above-identified application.

The petition is granted.

The express abandonment is recognized. Any previously paid search fee and excess claims fee are hereby refunded.

Telephone inquiries should be directed to the Office of Data Management at (571) 272-4200.

Betty Powell

Patent Publication Branch
Office of Data Management

UNITED STATES PATENT AND TRADEMARK OFFICE

Commissioner for Patents
United States Patent and Trademark Office
P.O. Box 1450
Alexandria, VA 22313-1450
www.uspto.gov

MAILED

AUG 08 2011

OFFICE OF PETITIONS

BROUILLETTE & PARTNERS
377 DE LA COMMUNE WEST
MONTREAL QC H2Y 2E2 CA CANADA

In re Application of	:	
OUREGA	:	
Application No. 12/411,588	:	DECISION ON PETITION
Filed: March 26, 2009	:	TO WITHDRAW
Attorney Docket No. 1601-15	:	FROM RECORD
	:	

This is a decision on the Request to Withdraw as attorney or agent of record under 37 C.F.R. § 1.36(b), filed July 26, 2011.

The request is **DISMISSED**.

The request to withdraw from record cannot be approved because the request to change the correspondence address is not acceptable. The Office will either change the correspondence address of record to the most current address information provided for the assignee of the entire interest who properly became of record under 37 CFR 3.71 or, if no assignee of the entire interest has properly been made of record under 37 CFR 3.71, the most current address information provided for the first named inventor. 37 CFR 3.71 states:

> *An assignee becomes of record either in a national patent application or a reexamination proceeding by filing a statement incompliance with § 3.73(b) that is signed by a party who is authorized to act on behalf of the assignee.*

According to a review of USPTO records, there is currently no Statement under 37 CFR 3.73(b) of record in the instant application for the assignee indicated on the Request to Withdraw as attorney. Since the assignee has not been properly made of record, the address cannot be changed.

Further, the Request for Withdrawal as Attorney cannot be approved because the attorney of record was not appointed through use of Customer Number 56535, as indicated. Any future submissions should include the proper designation by which the attorneys were initially appointed to assist the Office in reviewing and to expedite processing.

All future communications from the Office will continue to be directed to the above-identified address until otherwise properly notified.

Telephone inquiries concerning this decision should be directed to the undersigned at (571) 272-6735.

/Diane C. Goodwyn/
Diane C. Goodwyn
Petitions Examiner
Office of Petitions

cc: SHOPMEDIA INC.
432, RUE SAINTE-HELENE
MONTREAL QUEBEC H2Y 2K7 CANADA

UNITED STATES PATENT AND TRADEMARK OFFICE

Commissioner for Patents
United States Patent and Trademark Office
P.O. Box 1450
Alexandria, VA 22313-1450
www.uspto.gov

BROUILLETTE & PARTNERS
377 DE LA COMMUNE WEST
MONTREAL QC H2Y 2E2 CA CANADA

MAILED

AUG 22 2011

OFFICE OF PETITIONS

In re Application of	:	
OUREGA	:	
Application No. 12/411,588	:	DECISION ON PETITION
Filed: March 26, 2009	:	TO WITHDRAW
Attorney Docket No. 1601-15	:	FROM RECORD
	:	

This is a decision on the Request to Withdraw as attorney or agent of record under 37 C.F.R. § 1.36(b), filed August 15, 2011.

The request is **APPROVED**.

A grantable request to withdraw as attorney/agent of record must be signed by every attorney/agent seeking to withdraw or contain a clear indication that one attorney is signing on behalf of another/others. The Office requires the practitioner(s) requesting withdrawal to certify that he, she, or they have: (1) given reasonable notice to the client, prior to the expiration of the response period, that the practitioner(s) intends to withdraw from employment; (2) delivered to the client or a duly authorized representative of the client all papers and property (including funds) to which the client is entitled; and (3) notified the client of any responses that may be due and the time frame within which the client must respond, pursuant 37 CFR 10.40(c).

The request was signed by Robert Brouillette on behalf of all the attorneys of record.

All the attorneys of record have been withdrawn.

Applicant is reminded that there is no attorney of record at this time.

The correspondence address of record has been changed and the new address is the address indicated below until otherwise properly notified by the applicant.

Telephone inquiries concerning this decision should be directed to the undersigned at (571) 272-6735.

/Diane C. Goodwyn/
Diane C. Goodwyn
Petitions Examiner
Office of Petitions

cc: JEAN DOBEY OUREGA
3064 JACQUES-LAUZON
VERDUN QUEBEC H4G 3M8 CANADA

UNITED STATES PATENT AND TRADEMARK OFFICE

UNITED STATES DEPARTMENT OF COMMERCE
United States Patent and Trademark Office
Address: COMMISSIONER FOR PATENTS
P.O. Box 1450
Alexandria, Virginia 22313-1450
www.uspto.gov

APPLICATION NUMBER	FILING OR 371(C) DATE	FIRST NAMED APPLICANT	ATTY. DOCKET NO./TITLE
12/411,588	03/26/2009	JEAN DOBEY OUREGA	1601-15

CONFIRMATION NO. 5460

56535
BROUILLETTE & PARTNERS
377 de la Commune West
Montreal, QC H2Y 2E2
CANADA

POWER OF ATTORNEY NOTICE

OC000000049439051

Date Mailed: 08/22/2011

NOTICE REGARDING CHANGE OF POWER OF ATTORNEY

This is in response to the Power of Attorney filed 08/15/2011.

- The withdrawal as attorney in this application has been accepted. Future correspondence will be mailed to the new address of record. 37 CFR 1.33.

/dcgoodwyn/

Office of Data Management, Application Assistance Unit (571) 272-4000, or (571) 272-4200, or 1-888-786-0101

UNITED STATES PATENT AND TRADEMARK OFFICE

Commissioner for Patents
United States Patent and Trademark Office
P.O. Box 1450
Alexandria, VA 22313-1450
www.uspto.gov

TOM TILDEN
C/O WEST CORPORATION
11808 MIRACLE HILLS DR
MAIL STOP: W11-LEGAL
OMAHA NE 68154

MAILED

AUG 09 2011

OFFICE OF PETITIONS

In re Application of :
Steinbeck, et al. :
Application No. 12/411,637 : DECISION ON PETITION
Filing Date: March 26, 2009 : TO REVIVE
Attorney Docket No. PAT-045A :

This is in response to the petition to revive under 37 CFR 1.137(b), filed July 20, 2011.

The petition under 37 CFR 1.137(b) is **GRANTED**.

The above application became abandoned for failure to timely file pay the issue fee in response to the Notice of Allowance, mailed April 1, 2011. This Notice set a statutory period for reply of three months. No issue fee having been received, the application became abandoned on July 2, 2011.

With the instant petition, applicants paid the petition fee, submitted the required reply in the form of the issue fee, and made the proper statement of unintentional delay.

The application is being forwarded to the Office of Data Management for processing into a patent.

Telephone inquiries concerning this decision may be directed to the undersigned at (571)272-3207.

Cliff Congo
Petitions Attorney
Office of Petitions

UNITED STATES PATENT AND TRADEMARK OFFICE

Commissioner for Patents
United States Patent and Trademark Office
P.O. Box 1450
Alexandria, VA 22313-1450
www.uspto.gov

HEWLETT-PACKARD COMPANY
Intellectual Property Administration
3404 E. Harmony Road
Mail Stop 35
FORT COLLINS CO 80528

MAILED

AUG 11 2011

OFFICE OF PETITIONS

In re Application of :
Jong-Souk Yeo et al. :
Application No. 12/411,828 : DECISION ON PETITION
Filed: March 26, 2009 :
Attorney Docket No. 200803510-1 :

This is a decision on the petition under the unintentional provisions of 37 CFR 1.137(b), filed July 8, 2011, to revive the above-identified application.

The petition is **GRANTED**.

This application became abandoned for failure to timely pay the issue and publication fees on or before June 6, 2011, as required by the Notice of Allowance and Fee(s) Due, mailed March 4, 2011. Accordingly, the date of abandonment of this application is June 7, 2011. A Notice of Abandonment was mailed on June 21, 2011.

The petition satisfies the requirements of 37 CFR 1.137(b) in that petitioner has supplied (1) the reply in the form of payment of the issue fee of $1,510 and the publication fee of $300, (2) the petition fee of $1,620, and (3) a proper statement of unintentional delay. Accordingly, the issue and publication fees are accepted as being unintentionally delayed.

Telephone inquiries concerning this decision should be directed to Kimberly Inabinet at (571) 272-4618.

This application is being referred to the Office of Data Management for further processing into a patent.

/Kimberly A. Inabinet/

Kimberly A. Inabinet
Petitions Examiner
Office of Petitions

UNITED STATES PATENT AND TRADEMARK OFFICE

Commissioner for Patents
United States Patent and Trademark Office
P.O. Box 1450
Alexandria, VA 22313-1450
www.uspto.gov

HOFFMANN & BARON, LLP
6900 JERICHO TURNPIKE
SYOSSET NY 11791

MAILED

DEC 07 2011

OFFICE OF PETITIONS

In re Patent No. 7,910,031 :
Issued: March 22, 2011 :
Application No. 12/411,835 : NOTICE
Filed: March 26, 2009 :
Atty. Dkt. No.: 1199-4B DIV/CON :

This is a notice regarding your request for acceptance of a fee deficiency submission under 37 CFR 1.28.

The Office no longer investigates or rejects original or reissue applications under 37 CFR 1.56. **1098 Off. Gaz. Pat. Office 502 (January 3, 1989)**. Therefore, nothing in this Notice is intended to imply that an investigation was done.

Your fee deficiency submission under 37 CFR 1.28 is hereby **ACCEPTED**.

This application is no longer entitled to small entity status. Accordingly, all future fees paid in this application must be paid at the large entity rate.

Inquiries related to this communication should be directed to the undersigned at (571) 272-3205.

/ALESIA M. BROWN/

Alesia M. Brown
Attorney Advisor
Office of Petitions

UNITED STATES PATENT AND TRADEMARK OFFICE

Commissioner for Patents
United States Patent and Trademark Office
P.O. Box 1450
Alexandria, VA 22313-1450
www.uspto.gov

ASTRAZENECA R&D BOSTON
35 GATEHOUSE DRIVE
WALTHAM MA 02451-1215

MAILED
DEC 14 2011
OFFICE OF PETITIONS

In re Application of :
Bateman et al. :
Application No. 12/411,865 : ON PETITION
Filed: March 26, 2009 :
Attorney Docket No. 103271-1 US/0 :

This is a decision on the petition under the unintentional provisions of 37 CFR 1.137(b), filed November 10, 2011, to revive the above-identified application.

The petition is **DISMISSED**.

Any request for reconsideration of this decision must be submitted within TWO (2) MONTHS from the mail date of this decision. Extensions of time under 37 CFR 1.136(a) are permitted. The reconsideration request should include a cover letter entitled "Renewed Petition under 37 CFR 1.137(b)." This is **not** a final agency action within the meaning of 5 U.S.C. § 704.

The application became abandoned for failure to timely file a reply within the meaning of 37 CFR 1.113 to the final Office action of April 26, 2011. The proposed reply required for consideration of a petition to revive must be a Notice of Appeal (and appeal fee required by 37 CFR 41.20(b)(2)), an amendment that *prima facie* places the application in condition for allowance, a Request for Continued Examination (RCE) and submission (37 CFR 1.114), or the filing of a continuing application under 37 CFR 1.53(b). *See* MPEP 711.03(c)(III)(A)(2).

The petition fee of $930.00 will be charged to deposit account 50-3231.

A grantable petition under 37 CFR 1.137(b) must be accompanied by: (1) the required reply, unless previously filed; (2) the petition fee as set forth in 37 CFR 1.17(m); (3) a statement that the entire delay in filing the required reply from the due date for the reply until the filing of a grantable petition pursuant to 37 CFR 1.137(b) was unintentional; and (4) any terminal disclaimer (and fee as set forth in 37 CFR 1.20(d)) required by 37 CFR 1.137(d). Where there is a question as to whether either the abandonment or the delay in filing a petition under 37 CFR 1.137 was unintentional, the Director may require additional information. See MPEP 711.03(c)(II)(C) and (D). The instant petition lacks item(s) 1.

As to item (1), the examiner has determined that the amendment after final does not place the application in condition for allowance. An advisory action accompanies this decision.

An extension of time under 37 CFR 1.136 must be filed prior to the expiration of the maximum extendable period for reply. *See* In re Application of S., 8 USPQ2d 1630, 1631 (Comm'r Pats. 1988). Since the $1270 extension of time fee submitted on November 10, 2011 was subsequent to the maximum extendable period for reply, the fee will be refunded.

Further correspondence with respect to this matter should be addressed as follows:

By Mail:
Mail Stop PETITION
Commissioner for Patents
P. O. Box 1450
Alexandria, VA 22313-1450

By hand:
U. S. Patent and Trademark Office
Customer Service Window, Mail Stop Petitions
Randolph Building
401 Dulany Street
Alexandria, VA 22314

The centralized facsimile number is **(571) 273-8300.**

Telephone inquiries concerning this decision should be directed to the undersigned at (571) 272-3215.

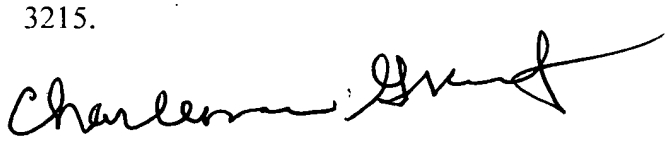

Charlema Grant
Attorney Advisor
Office of Petitions

Enclosure: Advisory Action

Advisory Action Before the Filing of an Appeal Brief	**Application No.** 12/411,865	**Applicant(s)** BATEMAN ET AL.
	Examiner SEAN BASQUILL	**Art Unit** 1613

--The MAILING DATE of this communication appears on the cover sheet with the correspondence address --

THE REPLY FILED 10 November 2011 FAILS TO PLACE THIS APPLICATION IN CONDITION FOR ALLOWANCE.

1. ☒ The reply was filed after a final rejection, but prior to or on the same day as filing a Notice of Appeal. To avoid abandonment of this application, applicant must timely file one of the following replies: (1) an amendment, affidavit, or other evidence, which places the application in condition for allowance; (2) a Notice of Appeal (with appeal fee) in compliance with 37 CFR 41.31; or (3) a Request for Continued Examination (RCE) in compliance with 37 CFR 1.114. The reply must be filed within one of the following time periods:
   a) ☒ The period for reply expires *3* months from the mailing date of the final rejection.
   b) ☐ The period for reply expires on: (1) the mailing date of this Advisory Action, or (2) the date set forth in the final rejection, whichever is later. In no event, however, will the statutory period for reply expire later than SIX MONTHS from the mailing date of the final rejection.

   Examiner Note: If box 1 is checked, check either box (a) or (b). ONLY CHECK BOX (b) WHEN THE FIRST REPLY WAS FILED WITHIN TWO MONTHS OF THE FINAL REJECTION. See MPEP 706.07(f).

Extensions of time may be obtained under 37 CFR 1.136(a). The date on which the petition under 37 CFR 1.136(a) and the appropriate extension fee have been filed is the date for purposes of determining the period of extension and the corresponding amount of the fee. The appropriate extension fee under 37 CFR 1.17(a) is calculated from: (1) the expiration date of the shortened statutory period for reply originally set in the final Office action; or (2) as set forth in (b) above, if checked. Any reply received by the Office later than three months after the mailing date of the final rejection, even if timely filed, may reduce any earned patent term adjustment. See 37 CFR 1.704(b).

NOTICE OF APPEAL

2. ☐ The Notice of Appeal was filed on _____. A brief in compliance with 37 CFR 41.37 must be filed within two months of the date of filing the Notice of Appeal (37 CFR 41.37(a)), or any extension thereof (37 CFR 41.37(e)), to avoid dismissal of the appeal. Since a Notice of Appeal has been filed, any reply must be filed within the time period set forth in 37 CFR 41.37(a).

AMENDMENTS

3. ☐ The proposed amendment(s) filed after a final rejection, but prior to the date of filing a brief, will not be entered because
   (a) ☐ They raise new issues that would require further consideration and/or search (see NOTE below);
   (b) ☐ They raise the issue of new matter (see NOTE below);
   (c) ☐ They are not deemed to place the application in better form for appeal by materially reducing or simplifying the issues for appeal; and/or
   (d) ☐ They present additional claims without canceling a corresponding number of finally rejected claims.

   NOTE: _____. (See 37 CFR 1.116 and 41.33(a)).
4. ☐ The amendments are not in compliance with 37 CFR 1.121. See attached Notice of Non-Compliant Amendment (PTOL-324).
5. ☐ Applicant's reply has overcome the following rejection(s): _____.
6. ☐ Newly proposed or amended claim(s) _____ would be allowable if submitted in a separate, timely filed amendment canceling the non-allowable claim(s).
7. ☒ For purposes of appeal, the proposed amendment(s): a) ☐ will not be entered, or b) ☒ will be entered and an explanation of how the new or amended claims would be rejected is provided below or appended.
   The status of the claim(s) is (or will be) as follows:
   Claim(s) allowed: _____.
   Claim(s) objected to: _____.
   Claim(s) rejected: *1-4 and 6-15*.
   Claim(s) withdrawn from consideration: *5 and 16-18*.

AFFIDAVIT OR OTHER EVIDENCE

8. ☐ The affidavit or other evidence filed after a final action, but before or on the date of filing a Notice of Appeal will not be entered because applicant failed to provide a showing of good and sufficient reasons why the affidavit or other evidence is necessary and was not earlier presented. See 37 CFR 1.116(e).
9. ☐ The affidavit or other evidence filed after the date of filing a Notice of Appeal, but prior to the date of filing a brief, will not be entered because the affidavit or other evidence failed to overcome all rejections under appeal and/or appellant fails to provide a showing a good and sufficient reasons why it is necessary and was not earlier presented. See 37 CFR 41.33(d)(1).
10. ☐ The affidavit or other evidence is entered. An explanation of the status of the claims after entry is below or attached.

REQUEST FOR RECONSIDERATION/OTHER

11. ☐ The request for reconsideration has been considered but does NOT place the application in condition for allowance because: _____.
12. ☐ Note the attached Information *Disclosure Statement*(s). (PTO/SB/08) Paper No(s). _____
13. ☒ Other: See Continuation Sheet.

/S. B./
Examiner, Art Unit 1613

Continuation of 13. Other: Applicants characterization of the art, namely that the hydrogen sulfate salt demonstrates "high" bioavailability, is misleading. The Squire reference makes no such absolute claims, but instead merely indicates that the hydrogen sulfate salt has "higher bioavailability" than either the free base or alternative salt forms. Merely because a reference, in this case Squire, indicates that a particular form of a compound demonstrates higher bioavailability when compared to a form with distinctly low bioavailability as the free base and other salt forms of the salified compound are described, does not preclude the skilled artisan from further extending and improving upon that bioavailability. Applicants are reminded that for art to properly "teach away from" a combination, the art relied upon must itself "criticize, discredit, or otherwise discourage the solution claimed." MPEP 2141.02(VI). Not only is no such criticism, discrediting, or discouragement to be found within either of the Squire or Guzman references, as the skilled artisan is well aware, additional improvements in bioavailability increases the benefit to cost ratio associated with the administration of any bioactive compound; less compound, administered less frequently, is required to achieve a therapeutic result. Because neither the Squire nor Guzman references properly "teach away from" their combination, applicants arguments are unpersuasive. Unless and until applicants amend their claims to avoid the combined teachings of Squire and Guzman, or provide evidence of secondary indicia of nonobviousness commensurate in scope with the invention claimed, the rejections of record shall stand..

UNITED STATES PATENT AND TRADEMARK OFFICE

Commissioner for Patents
United States Patent and Trademark Office
P.O. Box 1450
Alexandria, VA 22313-1450
www.uspto.gov

ASTRAZENECA R&D BOSTON
35 GATEHOUSE DRIVE
WALTHAM MA 02451-1215

MAILED

JAN 26 2012

OFFICE OF PETITIONS

In re Application of :
Bateman et al. :
Application No. 12/411,865 : ON PETITION
Filed: March 26, 2009 :
Attorney Docket No. 103271-1 US/0 :

This is a decision on the renewed petition under the unintentional provisions of 37 CFR 1.137(b), filed January 6, 2012, to revive the above-identified application.

The petition is **GRANTED**.

The application became abandoned for failure to timely file a reply within the meaning of 37 CFR 1.113 to the final Office action of April 26, 2011. The proposed reply required for consideration of a petition to revive must be a Notice of Appeal (and appeal fee required by 37 CFR 41.20(b)(2)), an amendment that *prima facie* places the application in condition for allowance, a Request for Continued Examination (RCE) and submission (37 CFR 1.114), or the filing of a continuing application under 37 CFR 1.53(b). *See* MPEP 711.03(c)(III)(A)(2).

The petition satisfies the requirements of 37 CFR 1.137(b) in that petitioner has supplied (1) the reply in the form of a continuing application under 37 CFR 1.53(b); (2) the petition fee of $930; and (3) a proper statement of unintentional delay.

This application is being revived solely for purposes of continuity. As continuity has been established by this decision, the application is again abandoned in favor of continuation application No. 13/293,368.

Telephone inquiries concerning this decision should be directed to the undersigned at (571) 272-3215.

Charlema Grant
Attorney Advisor
Office of Petitions

UNITED STATES PATENT AND TRADEMARK OFFICE

UNITED STATES DEPARTMENT OF COMMERCE
United States Patent and Trademark Office
Address: COMMISSIONER FOR PATENTS
P.O. Box 1450
Alexandria, Virginia 22313-1450
www.uspto.gov

APPLICATION NO.	FILING DATE	FIRST NAMED INVENTOR	ATTORNEY DOCKET NO.	CONFIRMATION NO.
12/411,923	03/26/2009	Masamichi KOBAYASHI	Q110994	6056

7590 06/28/2011

SUGHRUE MION, PLLC
2100 PENNSYLVANIA AVENUE, N.W.
SUITE 800
WASHINGTON, DC 20037

EXAMINER	
REDDY, SATHAVARAM I	

ART UNIT	PAPER NUMBER
1785	

NOTIFICATION DATE	DELIVERY MODE
06/28/2011	ELECTRONIC

DECISION GRANTING PETITION UNDER 37 CFR 1.138(d)

The declaration of express abandonment is recognized

This is in response to the petition under 37 CFR 1.138(d), requesting for a refund of any previously paid search fee and excess claims fee in the above-identified application.

The petition is granted.

The express abandonment is recognized. Any previously paid search fee and excess claims fee are hereby refunded.

Telephone inquiries should be directed to the Office of Data Management at (571) 272-4200.

Patent Publication Branch
Office of Data Management

UNITED STATES PATENT AND TRADEMARK OFFICE

UNITED STATES DEPARTMENT OF COMMERCE
United States Patent and Trademark Office
Address: COMMISSIONER FOR PATENTS
P.O. Box 1450
Alexandria, Virginia 22313-1450
www.uspto.gov

APPLICATION NO.	FILING DATE	FIRST NAMED INVENTOR	ATTORNEY DOCKET NO.	CONFIRMATION NO.
12/411,939	03/26/2009	Ryosuke Yagi	340413US2SRD	6087

7590 06/20/2011

OBLON, SPIVAK, MCCLELLAND MAIER & NEUSTADT, L.L.P.
1940 DUKE STREET
ALEXANDRIA, VA 22314

EXAMINER	
KALAFUT, STEPHEN J	

ART UNIT	PAPER NUMBER
1727	

NOTIFICATION DATE	DELIVERY MODE
06/20/2011	ELECTRONIC

DECISION GRANTING PETITION UNDER 37 CFR 1.138(d)

The declaration of express abandonment is recognized

This is in response to the petition under 37 CFR 1.138(d), requesting for a refund of any previously paid search fee and excess claims fee in the above-identified application.

The petition is granted.

The express abandonment is recognized. Any previously paid search fee and excess claims fee are hereby refunded.

Telephone inquiries should be directed to the Office of Data Management at (571) 272-4200.

Betty Powell

Patent Publication Branch
Office of Data Management

UNITED STATES PATENT AND TRADEMARK OFFICE

Commissioner for Patents
United States Patent and Trademark Office
P.O. Box 1450
Alexandria, VA 22313-1450
www.uspto.gov

MAILED
FEB 02 2012
OFFICE OF PETITIONS

ANTONELLI, TERRY, STOUT & KRAUS, LLP
1300 NORTH SEVENTEENTH STREET
SUITE 1800
ARLINGTON VA 22209-3873

In re Application of	
Takayanagi	
Application No. 12/411,996	
Filed: March 26, 2009	DECISION ON PETITION
Attorney Docket No.: 572.45876CX1	UNDER 37 C.F.R. § 1.181
Title: INFORMATION TRANSMITTING METHOD AND INFORMATION TRANSMITTING SYSTEM	

This is a decision on the petition pursuant to 37 C.F.R. § 1.181(a) to withdraw the holding of abandonment, filed on January 20, 2012.

BACKGROUND

The above-identified application became abandoned for failure to reply within the meaning of 37 C.F.R § 1.113 in a timely manner to the final Office action mailed February 17, 2011, which set a shortened statutory period for reply of three months. An after-final amendment was received on July 18, 2011 along with a two-month extension of time so as to make timely the submission,[1] and an advisory action was mailed on August 18, 2011. No extensions of time under the provisions of 37 C.F.R § 1.136(a) were obtained, and no further responses were received. Accordingly, the above-identified application became abandoned on July 18, 2011. A notice of abandonment was mailed on December 22, 2011.

ANALYSIS

With this petition, Petitioner has alleged that a conditional Request for Continued Examination (RCE) was filed on August 17, 2011.

The electronic file has been reviewed, and a copy of a conditional RCE (pursuant to MPEP § 706.07(h)(III)(C)) has been

1 It is noted that July 17, 2011 fell on Sunday.

located in the same. The submission was received on August 17, 2011. Moreover, Office records show that a payment of $620 so as to convert the aforementioned two-month extension of time into a three-month extension of time was received in the Office on August 17, 2011, so as to make timely the conditional RCE.

Considering the facts and circumstances of the delay at issue, as set forth on petition, it is concluded that Petitioner has met his burden of establishing that a response was timely submitted.

The $810 fee that was associated with the filing of an RCE on August 17, 2011 will be charged to Deposit Account No. 01-2135 in due course.

Accordingly, the petition pursuant to 37 C.F.R. § 1.181(a) is **GRANTED**. The holding of abandonment is **WITHDRAWN**.

CONCLUSION

The Technology Center will be notified of this decision. The Technology Center's support staff will notify the Examiner of this decision, so that both the RCE and the submission under 37 C.F.R. § 1.114 - the amendment submitted on July 18, 2011 - can be processed in due course.

Petitioner may find it beneficial to view Private PAIR within a fortnight of the present decision to ensure that the withdrawal of the holding of abandonment has been acknowledged by the Technology Center in response to this decision. It is noted that all inquiries with regard to any failure of that change in status should be directed to the Technology Center where that change of status must be effected - **the Office of Petitions cannot effectuate a change of status.** Telephone inquiries regarding *this decision* should be directed to the undersigned at (571) 272-3225.[2] All other inquiries concerning examination procedures or status of the application should be directed to the Technology Center.

Paul Shanoski
Senior Attorney
Office of Petitions

2 Petitioner will note that all practice before the Office should be in writing, and the action of the Office will be based exclusively on the written record in the Office. See 37 C.F.R. § 1.2. As such, Petitioner is reminded that no telephone discussion may be controlling or considered authority for Petitioner's further action(s).

UNITED STATES PATENT AND TRADEMARK OFFICE

Commissioner for Patents
United States Patent and Trademark Office
P.O. Box 1450
Alexandria, VA 22313-1450
www.uspto.gov

MAILED

OCT 12 2010

OFFICE OF PETITIONS

FISH & RICHARDSON P.C. (NY)
P.O. BOX 1022
MINNEAPOLIS MN 55440-1022

In re Application of :
Joseph B. SCHUTTE :
Application No. 12/412,022 : DECISION ON PETITION
Filed: March 26, 2009 : TO WITHDRAW
Attorney Docket No. 22817-0006US2 : FROM RECORD
:

This is a decision on the Request to Withdraw as attorney or agent of record under 37 C.F.R. § 1.36(b), filed September 7, 2010.

The request is **NOT APPROVED.**

The Office will no longer accept address changes to a new practitioner or law firm filed with a Request, absent the filing of a power of attorney to the new representative. The Office will either change the correspondence address of record to the most current address information provided for the assignee of the entire interest who properly became of record under 37 CFR 3.71 or, if no assignee of the entire interest has properly been made of record under 37 CFR 3.71, the most current address information provided for the first named inventor.

Accordingly, the request to withdraw from record cannot be approved because the request to change the correspondence address is not that of the first named inventor; or an assignee of the entire interest who has properly been made of record under 37 C.F.R 3.71.

All future communications from the Office will continue to be directed to the above-identified address until otherwise properly notified.

Telephone inquiries concerning this decision should be directed to the undersigned at 571-272- 6735.

/DCG/
Diane C. Goodwyn
Petitions Examiner
Office of Petitions

Cc: SEKUWORKS, LLC
9487 DRY FORK ROAD
HARRISON, OH 45030

UNITED STATES PATENT AND TRADEMARK OFFICE

Commissioner for Patents
United States Patent and Trademark Office
P.O. Box 1450
Alexandria, VA 22313-1450
www.uspto.gov

LEVINE BAGADE HAN, LLP
2400 GENG ROAD, SUITE 120
PALO ALTO, CA 94303

MAILED

SEP 30 2010

OFFICE OF PETITIONS

In re Application of :
Marcus A. ROSENTHAL, et *al.* :
Application No. 12/412,032 :
Filed: March 26, 2009 :
Attorney Docket No. **SRIN-N-A104.02-US** :

DECISION ON PETITION TO WITHDRAW FROM RECORD

This is a decision on the Request to Withdraw as attorney or agent of record under 37 C.F.R. § 1.36(b), filed August 26, 2010.

The request is **DISMISSED** as moot.

A review of the file record indicates that the power of attorney to **LEVINE BAGADE HAN, LLP** has been revoked by the assignee of the patent application on September 8, 2010. Accordingly, the request to withdraw under 37 C.F.R. § 1.36(b) is moot.

All future communications from the Office will continue to be directed to the below-listed address until otherwise notified by applicant.

Telephone inquires concerning this decision should be directed to the undersigned at 571-272-7253.

/Monica A. Graves/
Petitions Examiner, Office of Petitions

cc: **BAYER MATERIAL SCIENCE, LLC**
100 BAYER ROAD
PITTSBURGH, PA 15205

UNITED STATES PATENT AND TRADEMARK OFFICE

Commissioner for Patents
United States Patent and Trademark Office
P.O. Box 1450
Alexandria, VA 22313-1450
www.uspto.gov

GENERAL MOTORS LLC
LEGAL STAFF
MAIL CODE 482-C23-B21
P.O. BOX 300
DETROIT MI 48265-3000

MAILED
APR 09 2012
OFFICE OF PETITIONS

In re Application of
David J. Verbrugge et al
Application No. 12/412,082
Filed: March 26, 2009
Attorney Docket No. P006133-NAPD-TJM
003.0618

DECISION GRANTING PETITION
UNDER 37 CFR 1.313(c)(2)

This is a decision on the petition under 37 CFR 1.313(c)(2), filed April 6, 2012, to withdraw the above-identified application from issue after payment of the issue fee.

The petition is **GRANTED**.

The above-identified application is withdrawn from issue for consideration of a submission under 37 CFR 1.114 (request for continued examination). *See* 37 CFR 1.313(c)(2).

Petitioner is advised that the issue fee paid on March 12, 2012 cannot be refunded. If, however, this application is again allowed, petitioner may request that it be applied towards the issue fee required by the new Notice of Allowance.[1]

Telephone inquiries should be directed to the undersigned at (571) 272-3208.

This application is being referred to Technology Center AU 2833 for processing of the request for continued examination under 37 CFR 1.114 and for consideration of the concurrently filed IDS.

/Karen Creasy/
Karen Creasy
Petitions Examiner
Office of Petitions

[1] *The request to apply the issue fee to the new Notice may be satisfied by completing and returning the new Part B – Fee(s) Transmittal Form (along with any balance due at the time of submission). Petitioner is advised that the Issue Fee Transmittal Form must be completed and timely submitted to avoid abandonment of the application.*

Doc code : PET.OP.AGE
Description : Petition to make special based on Age/Health

PTO/SB/130 (07-09)
Approved for use through 07/31/2012. OMB 0651- 0031
U.S. Patent and Trademark Office; U.S. DEPARTMENT OF COMMERCE
Under the Paperwork Reduction Act of 1995, no persons are required to respond to a collection of information unless it contains a valid OMB control number

PETITION TO MAKE SPECIAL BASED ON AGE FOR ADVANCEMENT OF EXAMINATION UNDER 37 CFR 1.102(c)(1)

Application Information

Application Number	12/412,124	Confirmation Number	6445	Filing Date	2009-03-26
Attorney Docket Number (optional)	P1867	Art Unit	3637	Examiner	Sarah L Purol
First Named Inventor	F David LaRiviere				
Title of Invention	Side-Entry Stemmed Glassware Rack				

Attention: Office of Petitions

An application may be made special for advancement of examination upon filing of a petition showing that the applicant is 65 years of age, or more. No fee is required with such a petition. See 37 CFR 1.102(c)(1) and MPEP 708.02 (IV).

APPLICANT HEREBY PETITIONS TO MAKE SPECIAL FOR ADVANCEMENT OF EXAMINATION IN THIS APPLICATION UNDER 37 CFR 1.102(c)(1) and MPEP 708.02 (IV) ON THE BASIS OF THE APPLICANT'S AGE.

A grantable petition requires one of the following items:
(1) Statement by one named inventor in the application that he/she is 65 years of age, or more; or
(2) Certification by a registered attorney/agent having evidence such as a birth certificate, passport, driver's license, etc. showing one named inventor in the application is 65 years of age, or more.

Name of Inventor who is 65 years of age, or older

Given Name	Middle Name	Family Name	Suffix
F	David	LaRiviere	

A signature of the applicant or representative is required in accordance with 37 CFR 1.33 and 10.18. Please see 37 CFR 1.4(d) for the format of the signature.

Select (1) or (2) :

(●) (1) I am an inventor in this application and I am 65 years of age, or more.

( ) (2) I am an attorney or agent registered to practice before the Patent and Trademark Office, and I certify that I am in possession of evidence, and will retain such in the application file record, showing that the inventor listed above is 65 years of age, or more.

Signature	/F David LaRiviere/	Date (YYYY-MM-DD)	2011-05-06
Name	F David LaRiviere		

PTO/SB/130 (07-09)
Approved for use through 07/31/2012. OMB 0651- 0031
U.S. Patent and Trademark Office; U.S. DEPARTMENT OF COMMERCE
Under the Paperwork Reduction Act of 1995, no persons are required to respond to a collection of information unless it contains a valid OMB control number

Privacy Act Statement

The Privacy Act of 1974 (P.L. 93-579) requires that you be given certain information in connection with your submission of the attached form related to a patent application or patent. Accordingly, pursuant to the requirements of the Act, please be advised that: (1) the general authority for the collection of this information is 35 U.S.C. 2(b)(2); (2) furnishing of the information solicited is voluntary; and (3) the principal purpose for which the information is used by the U.S. Patent and Trademark Office is to process and/or examine your submission related to a patent application or patent. If you do not furnish the requested information, the U.S. Patent and Trademark Office may not be able to process and/or examine your submission, which may result in termination of proceedings or abandonment of the application or expiration of the patent.

The information provided by you in this form will be subject to the following routine uses:

1. The information on this form will be treated confidentially to the extent allowed under the Freedom of Information Act (5 U.S.C. 552) and the Privacy Act (5 U.S.C. 552a). Records from this system of records may be disclosed to the Department of Justice to determine whether the Fr eedom of Information Act requires disclosure of these records.

2. A record from this system of records may be disclosed, as a routine use, in the course of presenting evidence to a court, magistrate, or administrative tribunal, including disclosures to opposing counsel in the course of settlement negotiations.

3. A record in this system of records may be disclosed, as a routine use, to a Member of Congress submitting a request involving an individual, to whom the record pertains, when the individual has requested assistance from the Member with respect to the subject matter of the record.

4. A record in this system of records may be disclosed, as a routine use, to a contractor of the Agency having need for the information in order to perform a contract. Recipients of information shall be required to comply with the requirements of the Privacy Act of 1974, as amended, pursuant to 5 U.S.C. 552a(m).

5. A record related to an International Application filed under the Patent Cooperation Treaty in this system of records may be disclosed, as a routine use, to the International Bureau of the World Intellectual Property Organization, pursuant to the Patent Cooperation Treaty.

6. A record in this system of records may be disclosed, as a routine use, to another federal agency for purposes of National Security review (35 U.S.C. 181) and for review pursuant to the Atomic Energy Act (42 U.S.C. 218(c)).

7. A record from this system of records may be disclosed, as a routine use, to the Administrator, General Services, or his/her designee, during an inspection of records conducted by GSA as part of that agency's responsibility to recommend improvements in records management practices and programs, under authority of 44 U.S.C. 2904 and 2906. Such disclosure shall be made in accordance with the GSA regulations governing inspection of records for this purpose, and any other relevant (i.e., GSA or Commerce) directive. Such disclosure shall not be used to make determinations about indivi duals.

8. A record from this system of records may be disclosed, as a routine use, to the public after either publication of the application pursuant to 35 U.S.C. 122(b) or issuance of a patent pursuant to 35 U.S.C. 151. Further, a record may be disclosed, subject to the limitations of 37 CFR 1.14, as a routine use, to the public if the record was filed in an application which became abandoned or in which the proceedings were terminated and which application is referenced by either a published application, an application open to public inspections or an issued patent.

9. A record from this system of records may be disclosed, as a routine use, to a Federal, State, or local law enforcement agency, if the USPTO becomes aware of a violation or potential violation of law or regulation.

UNITED STATES PATENT AND TRADEMARK OFFICE

Commissioner for Patents
United States Patent and Trademark Office
P.O. Box 1450
Alexandria, VA 22313-1450
www.uspto.gov

In re Application of
F. David LaRiviere

Application No. 12412124

Filed: March 26,2009

Attorney Docket No. P1867

:
:
:DECISION ON PETITION TO MAKE SPECIAL
:UNDER 37 CFR 1.102(c)(1)
:

This is a decision on the electronic petition under 37 CFR 1.102 (c)(1), filed 06-MAY-2011 to make the above-identified application special based on applicant's age as set forth in MPEP § 708.02, Section IV.

The petition is **GRANTED**.

A grantable petition to make an application special under 37 CFR 1.102(c)(1), MPEP § 708.02, Section IV: Applicant's Age must include a statement by applicant or a registered practitioner having evidence that applicant is at least 65 years of age. No fee is required.

Accordingly, the above-identified application has been accorded "special" status and will be taken up for action by the examiner upon the completion of all pre-examination processing.

Telephone inquiries concerning this electronic decision should be directed to the Electronic Business Center at 866-217-9197.

All other inquiries concerning either the examination or status of the application should be directed to the Technology Center.

SPE RESPONSE FOR CERTIFICATE OF CORRECTION

Paper No.: _____

DATE : April 4, 2011

TO SPE OF : ART UNIT 2887
SUBJECT : Request for Certificate of Correction for Appl. No. 12/412142 patent No.:7874478
C of C mailroom date:--03-21-11

Please respond to this request for a certificate of correction within 7 days.

Please review the requested changes/corrections as shown in the **COCIN** document(s) in the IFW application image. No new matter should be introduced, nor should the scope or meaning of the claims be changed.

Please complete the response (see below) and forward the completed response to scanning using document code **COCX**.

Magdalene Talley

Certificates of Correction Branch

571-272- 0423

Thank You For Your Assistance

The request for issuing the above-identified correction(s) is hereby:

Note your decision on the appropriate box.

x **Approved**	**All** changes apply.
❑ **Approved in Part**	Specify below which changes **do not** apply.
❑ **Denied**	State the reasons for denial below.

Comments: The Request for Certificate of Correction filed March 21, 2011 has been considered and approved.

/Steven S. Paik/ 2887
SPE **Art Unit**

Doc Code: PPH.PCT.652
Document Description: Petition to make special under PCT-Patent Pros Hwy

PTO/SB/20PCT-KR (06-10)
Approved for use through 01/31/2012. OMB 0651-0058
U.S. Patent and Trademark Office; U. S. DEPARTMENT OF COMMERCE
Under the Paperwork Reduction Act of 1995, no persons are required to respond to a collection of information unless it displays a valid OMB control number.

REQUEST FOR PARTICIPATION IN THE PATENT COOPERATION TREATY - PATENT PROSECUTION HIGHWAY (PCT-PPH) PILOT PROGRAM BETWEEN THE KOREAN INTELLECTUAL PROPERTY OFFICE (KIPO) AND THE USPTO

Application No:	12/412,231	Filing date:	March 26, 2009
First Named Inventor:	Imad M. Swais		
Title of the Invention:	MULTI-BAND ANTENNA ASSEMBLIES		

THIS REQUEST FOR PARTICIPATION IN THE PCT-PPH PILOT PROGRAM ALONG WITH THE REQUIRED DOCUMENTS MUST BE SUBMITTED VIA EFS-WEB. INFORMATION REGARDING EFS-WEB IS AVAILABLE AT HTTP://WWW.USPTO.GOV/EBC/EFS_HELP.HTML

APPLICANT HEREBY REQUESTS PARTICIPATION IN THE PCT-PPH PROGRAM AND PETITIONS TO MAKE THE ABOVE-IDENTIFIED APPLICATION SPECIAL UNDER THE PCT-PPH PROGRAM.

The above-identified application is (1) a national stage entry of the corresponding PCT application, or (2) a national stage entry of another PCT application which claims priority to the corresponding PCT application, or (3) a national application that claims domestic/ foreign priority to the corresponding PCT application, or (4) a national application which forms the basis for the priority claim in the corresponding PCT application, or (5) a continuing application of a U.S. application that satisfies one of (1) to (4) above, or (6) a U.S. application that claims domestic benefit to a U.S. provisional application which forms the basis for the priority claim in the corresponding PCT application.

The corresponding PCT application number(s) is/are: PCT/US2010/028172 (published as WO 2010/111190)

The international date of the corresponding PCT application(s) is/are: March 22, 2010

I. List of Required Documents:

a. **A copy of the latest international work product (WO/ISA, WO/IPEA, or IPER) in the above-identified corresponding PCT application(s)**

☒ Is attached.

☐ Is not attached because the document is already in the U.S. application.

b. **A copy of all claims which were indicated as having novelty, inventive step and industrial applicability in the above-identified corresponding PCT application(s).**

☒ Is attached.

☐ Is not attached because the document is already in the U.S. application.

c. **English translations of the documents in a. and b. above are attached (if the documents are not in the English language). A statement that the English translation is accurate is attached for the document in b. above.**

This collection of information is required by 35 U.S.C. 119, 37 CFR 1.55, and 37 CFR 1.102(d). The information is required to obtain or retain a benefit by the public, which is to file (and by the USPTO to process) an application. Confidentiality is governed by 35 U.S.C. 122 and 37 CFR 1.11 and 1.14. This collection is estimated to take 2 hours to complete, including gathering, preparing, and submitting the completed application form to the USPTO. Time will vary depending upon the individual case. Any comments on the amount of time you require to complete this form and/or suggestions for reducing this burden should be sent to the Chief Information Officer, U.S. Patent and Trademark Office, U.S. Department of Commerce, P.O. Box 1450, Alexandria, VA 22313-1450. DO NOT SEND FEES OR COMPLETED FORMS TO THIS ADDRESS.

REQUEST FOR PARTICIPATION IN THE PCT-PPH PILOT PROGRAM BETWEEN THE KIPO AND THE USPTO

(continued)

Application No.:	12/412,231
First Named Inventor:	Imad M. Swais

d. **(1) An information disclosure statement listing the documents cited in the international work products (ISR, WO/ISA, WO/IPEA, IPER) of the corresponding PCT application.**

☐ Is attached

☑ Has already been filed in the above-identified U.S. application on January 10, 2011

(2) Copies of all documents (except) for U.S. patents or U.S. patent application publications)

☑ Are attached.

Have already been filed in the above-identified U.S. application on January 10, 2011

II. Claims Correspondence Table:

Claims in US Application	Patentable Claims in the corresponding PCT Application	Explanation regarding the correspondence
1	1	Same
2	2	Same
3	3	Same (except US claim 3 only depends from claim 2)
4	X	US claim 4 depends from patentable claim 1
5	X	US claim 5 ultimately depends from patentable claim 1
6	X	US claim 6 ultimately depends from patentable claim 1
7	X	US claim 7 ultimately depends from patentable claim 1
8	X	US claim 8 depends from patentable claim 1
9	X	US claim 9 ultimately depends from patentable claim 1
10	X	US claim 10 depends from patentable claim 1
11	X	US claim 11 depends from patentable claim 1
12	X	US claim 12 depends from patentable claim 1
13	X	US claim 13 depends from patentable claim 1
14	14	Same
15	15	Same
16	16	Same
17	X	Depends from patentable independent claim 14
18	X	Depends from patentable independent claim 14
19	19	Same

III. All the claims in the US application sufficiently correspond to the patentable claims in the corresponding PCT application.

Signature /Anthony G. Fussner/	Date January 11, 2011
Name (Print/Typed) Anthony G. Fussner	Registration Number 47582

REQUEST FOR PARTICIPATION IN THE PCT-PPH PILOT PROGRAM BETWEEN THE KIPO AND THE USPTO

(continued)

Application No.:	12/412,231
First Named Inventor:	Imad M. Swais

d. **(1) An information disclosure statement listing the documents cited in the international work products (ISR, WO/ISA, WO/IPEA, IPER) of the corresponding PCT application.**

☐ Is attached

☒ Has already been filed in the above-identified U.S. application on January 10, 2011

(2) Copies of all documents (except) for U.S. patents or U.S. patent application publications)

☒ Are attached.

Have already been filed in the above-identified U.S. application on January 10, 2011

II. Claims Correspondence Table:

Claims in US Application	Patentable Claims in the corresponding PCT Application	Explanation regarding the correspondence
20	20	Same
21	21	Same (except US claim 21 depends from claim 20)
22	22	Same
23	23	Same
24	24	Same
25	25	Same

III. All the claims in the US application sufficiently correspond to the patentable claims in the corresponding PCT application.

Signature /Anthony G. Fussner/	Date January 11, 2011
Name (Print/Typed) Anthony G. Fussner	Registration Number 47582

(12) INTERNATIONAL APPLICATION PUBLISHED UNDER THE PATENT COOPERATION TREATY (PCT)

(19) World Intellectual Property Organization
International Bureau

(43) International Publication Date
30 September 2010 (30.09.2010)

PCT

(10) International Publication Number
WO 2010/111190 A2

(51) International Patent Classification:
H01Q 9/30 (2006.01) *H01Q 9/14* (2006.01)
H01Q 5/00 (2006.01)

(21) International Application Number:
PCT/US2010/028172

(22) International Filing Date:
22 March 2010 (22.03.2010)

(25) Filing Language: English

(26) Publication Language: English

(30) Priority Data:
12/412,231 26 March 2009 (26.03.2009) US

(71) Applicant *(for all designated States except US)*: **LAIRD TECHNOLOGIES, INC.** [US/US]; 16401 Swingley Ridge Road, Chesterfield, MO 63017 (US).

(72) Inventors; and
(75) Inventors/Applicants *(for US only)*: **SWAIS, Imad M.** [US/US]; 309-b Milton Court, Bloomingdale, IL 60108 (US). **HARO, Rafael** [US/US]; 5448 N. Artesian, 1 FL, Chicago, IL 60625 (US).

(74) Agent: **FUSSNER, Anthony, G.**; Harness, Dickey & Pierce, P.L.C., 7700 Bonhomme, Suite 400, St. Louis, MO 63105 (US).

(81) Designated States *(unless otherwise indicated, for every kind of national protection available)*: AE, AG, AL, AM, AO, AT, AU, AZ, BA, BB, BG, BH, BR, BW, BY, BZ, CA, CH, CL, CN, CO, CR, CU, CZ, DE, DK, DM, DO, DZ, EC, EE, EG, ES, FI, GB, GD, GE, GH, GM, GT, HN, HR, HU, ID, IL, IN, IS, JP, KE, KG, KM, KN, KP, KR, KZ, LA, LC, LK, LR, LS, LT, LU, LY, MA, MD, ME, MG, MK, MN, MW, MX, MY, MZ, NA, NG, NI, NO, NZ, OM, PE, PG, PH, PL, PT, RO, RS, RU, SC, SD, SE, SG, SK, SL, SM, ST, SV, SY, TH, TJ, TM, TN, TR, TT, TZ, UA, UG, US, UZ, VC, VN, ZA, ZM, ZW.

(84) Designated States *(unless otherwise indicated, for every kind of regional protection available)*: ARIPO (BW, GH, GM, KE, LS, MW, MZ, NA, SD, SL, SZ, TZ, UG, ZM, ZW), Eurasian (AM, AZ, BY, KG, KZ, MD, RU, TJ, TM), European (AT, BE, BG, CH, CY, CZ, DE, DK, EE, ES, FI, FR, GB, GR, HR, HU, IE, IS, IT, LT, LU, LV, MC, MK, MT, NL, NO, PL, PT, RO, SE, SI, SK, SM, TR), OAPI (BF, BJ, CF, CG, CI, CM, GA, GN, GQ, GW, ML, MR, NE, SN, TD, TG).

[Continued on next page]

(54) Title: MULTI-BAND ANTENNA ASSEMBLIES

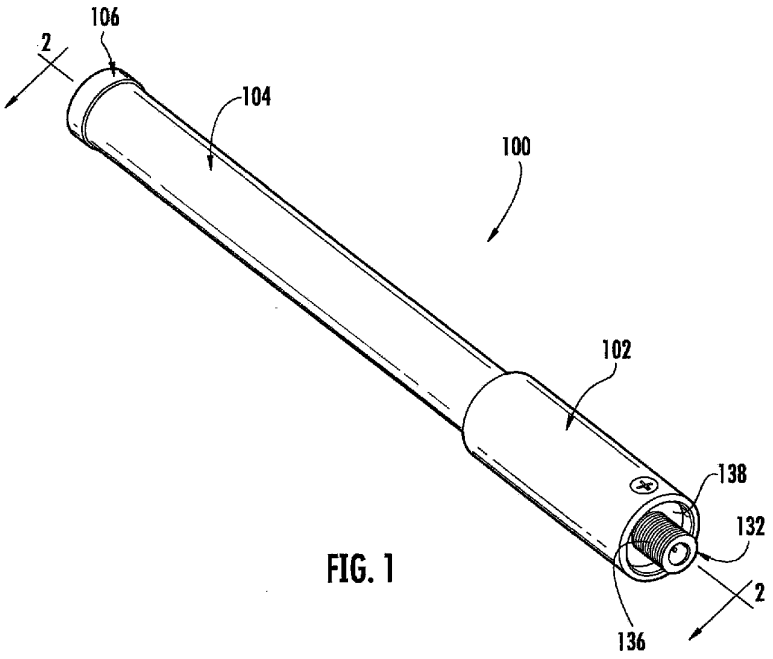

FIG. 1

(57) Abstract: A multi-band antenna assembly that is operable to receive and/or transmit signals at one or more frequencies generally includes at least two radiating elements, a transmission line coupled to each of the at least two radiating elements, and a tunable match resonator coupled to the transmission line. The tunable match resonator is operable to vary input impedance of a signal received and/or transmitted by the antenna assembly by changing an electrical field within the tunable match resonator.

WO 2010/111190 A2

Published:

— *without international search report and to be republished upon receipt of that report (Rule 48.2(g))*

MULTI-BAND ANTENNA ASSEMBLIES

CROSS-REFERENCE TO RELATED APPLICATION

[0001] This application is PCT International Application of U.S. Patent Application Number 12/412,231 filed March 26, 2009. The entire disclosure of the above-identified application is incorporated herein by reference in its entirety.

FIELD

[0002] The present disclosure relates generally to antenna assemblies, and more particularly to multi-band coaxial antenna assemblies for use with, for example, base station subsystems of wireless communications networks.

BACKGROUND

[0003] This section provides background information related to the present disclosure which is not necessarily prior art.

[0004] Multi-band antenna assemblies such as, for example, coaxial antenna assemblies, are often used in base station subsystems of wireless communications networks. And, the base station subsystems may be used in communicating with, for example, wireless application devices, such as cellular phones, personal digital assistants (PDAs), etc. Such use is continuously increasing. Consequently, additional frequency bands are required (at lowered costs) to accommodate the increased use, and antenna assemblies capable of handling the additional different frequency bands are desired.

SUMMARY

[0005] This section provides a general summary of the disclosure, and is not a comprehensive disclosure of its full scope or all of its features.

[0006] Example embodiments of the present disclosure are generally directed toward multi-band antenna assemblies operable to receive and/or transmit signals at one or more frequencies. In one example embodiment, a multi-band antenna assembly generally includes at least two radiating elements, a transmission line coupled to each of the at least two radiating elements, and a tunable match resonator coupled to the transmission line and operable to vary input impedance of a signal received

and/or transmitted by the antenna assembly by changing an electrical field within the tunable match resonator.

[0007] Example embodiments of the present disclosure are also generally directed toward tunable match resonators for antenna assemblies. In one example embodiment, a tunable match resonator generally includes a generally tubular radiating element, a loading rod disposed at least partially within the radiating element; a balun coupled to the loading rod, and a dielectric load bushing coupled to the balun. The balun and the dielectric load bushing are disposed at least partially within the radiating element. And, the balun and the dielectric load bushing are moveable relative to the loading rod for varying input impedance of a signal received and/or transmitted by an antenna assembly by changing an electrical field within the tunable match resonator. Whereby the tunable match resonator is operable to adjust the frequency bandwidth of signals capable of being received and/or transmitted by an antenna assembly.

[0008] Example embodiments of the present disclosure are also generally directed toward multi-band array antenna assemblies operable to receive and/or transmit signals at one or more frequencies. In one example embodiment, an array antenna assembly generally includes first, second, and third open-ended radiating tubes oriented in a generally stacked configuration, a coaxial cable extending generally through each of the first and second radiating tubes, and a loading rod coupled to the coaxial cable and extending generally through the third radiating tube. A balun is coupled to the loading rod generally within the third radiating tube and moveable longitudinally relative to the loading rod within the third radiating tube. And, a dielectric load bushing is coupled to the balun. The balun and the dielectric load bushing are operable to vary input impedance of a signal received and/or transmitted by the array antenna assembly by changing an electrical field within the third radiating tube to thereby adjust the frequency bandwidth of signals capable of being received and/or transmitted by the array antenna assembly.

[0009] Further areas of applicability will become apparent from the description provided herein. The description and specific examples in this summary are intended for purposes of illustration only and are not intended to limit the scope of the present disclosure.

DRAWINGS

[0010] The drawings described herein are for illustrative purposes only of selected embodiments and not all possible implementations, and are not intended to limit the scope of the present disclosure.

[0011] FIG. 1 is a perspective view of an example embodiment of an antenna assembly including one or more aspects of the present disclosure;

[0012] FIG. 2 is a section view of the antenna assembly of FIG. 1 taken in a plane including line 2-2 in FIG. 1;

[0013] FIG. 3 is a perspective view of the antenna assembly of FIG. 1 with a base sleeve, a housing, and a cap removed to show internal construction of the antenna assembly;

[0014] FIG. 4 is a perspective view of a tunable match resonator of the antenna assembly of FIG. 1;

[0015] FIG. 5 is a section view of the tunable match resonator of FIG. 1 taken in a plane including line 5-5 in FIG. 4;

[0016] FIG. 6 is a perspective view of the tunable match resonator of FIG. 4 with a match resonator radiating element removed to show internal construction of the tunable match resonator; and

[0017] FIG. 7 is a line graph illustrating voltage standing wave ratios (VSWRs) for the example antenna assembly shown in FIG. 1 over a frequency bandwidth of about 800 MHz to about 3000 MHz and with an intermediate frequency bandwidth (IFBW) of about 70 KHz.

[0018] Corresponding reference numerals indicate corresponding parts throughout the several views of the drawings.

DETAILED DESCRIPTION

[0019] Example embodiments will now be described more fully with reference to the accompanying drawings.

[0020] According to various aspects of the present disclosure, antenna assemblies (*e.g.*, coaxial antenna assemblies, etc.) are provided suitable for operation over different bands of wavelengths (*e.g.*, multi-band operation, etc.). For example, antenna assemblies of the present disclosure may be tuned to multiple different resonant frequencies such that the antenna assemblies are operable to receive and/or transmit multiple different frequencies of signals over multiple different bands of wavelengths.

[0021] For example, antenna assemblies of the present disclosure may be suitable for operation over bandwidths ranging between about 804 megahertz (MHz) and about 829 MHz (Advanced Mobile Phone System (AMPS)), between about 806 MHz and about 941 MHz (Integrated Digital Enhanced Network (iDEN)), between about 855 MHz and about 980 MHz (Global System for Mobile communications (GSM)), between about 1660 MHz and about 1910 MHz, between about 1670 MHz and about 1920 MHz (Digital Cellular System (DCS)), between about 1790 MHz and 2010 MHz (Personal Communications Service (PCS)), between about 1920 MHz and about 2170 MHz (Universal Mobile Telecommunications System (UMTS)), between about 2400 MHz and about 2500 MHz (Industrial, Scientific and Medical (ISM)), etc. While the foregoing provides an example listing of bandwidths over which example antenna assemblies are operable, it should be appreciated that antenna assemblies of the present disclosure may also be tuned, as desired, to suit for operation over bandwidths having different frequency ranges within the scope of the present disclosure.

[0022] Antenna assemblies of the present disclosure may be used, for example, with systems and/or networks and/or devices such as those associated with cellular systems, wireless internet service provider (WISP) networks, broadband wireless access (BWA) systems, wireless local area networks (WLANs), wireless application devices, etc. As an example, the antenna assemblies may be included as part of base station subsystems, operable for helping to handle traffic and signaling (*e.g.*, sending signals, receiving signals, etc.) between wireless devices (*e.g.*, cellular phones, etc.) and network switching subsystems.

[0023] With reference now to the drawings, FIGS. 1 through 6 illustrate an example embodiment of an antenna assembly 100 including one or more aspects of the present disclosure. The illustrated antenna assembly 100 may be included as part of a base station subsystem (not shown) of a cellular telephone network. And, as will be described in more detail hereinafter, the antenna assembly 100 may be tuned to multiple different resonant frequencies over multiple different bandwidths for enhancing operation of the base station subsystem.

[0024] As shown in FIG. 1, the illustrated antenna assembly 100 generally includes a base sleeve 102, a housing 104 coupled to the base sleeve 102, and a cap 106 coupled to the housing 104. The base sleeve 102 is generally tubular in shape and may be constructed from suitable metallic materials such as, for example, aluminum, etc. The housing 104 is also generally tubular in shape and is coupled to the base sleeve 102, for example, by a threaded connection (*e.g.*, via mating threads 110 and 112 respectively on the housing 104 and on the base sleeve 102 (FIG. 2), etc.) and/or by an epoxy connection, etc. The housing 104 may be constructed from suitable insulating materials such as, for example, fiberglass, etc. And, the cap 106 may be coupled to the housing 104 by suitable means (*e.g.*, epoxy connections, weld connections, threaded connections, etc.), and may be constructed from suitable metallic materials.

[0025] The base sleeve 102, the housing 104, and the cap 106 may help protect the components of the antenna assembly 100 enclosed within an interior defined by the base sleeve 102, the housing 104, and the cap 106 against mechanical damage, etc. The base sleeve 102, the housing 104, and the cap 106 may also provide an aesthetically pleasing appearance to the antenna assembly 100. Base sleeves, housings, and caps may be configured (*e.g.*, shaped, sized, constructed, etc.) differently than disclosed herein within the scope of the present disclosure.

[0026] With additional reference now to FIGS. 2 and 3, the illustrated antenna assembly 100 also generally includes a coaxial antenna module 116 and a tunable match resonator 118 (*e.g.*, an attenuator, etc.) coupled to the coaxial antenna module 116. The coaxial antenna module 116 and the match resonator 118 are each disposed generally within the interior defined by the base sleeve 102, the housing 104, and the cap 106, with the match resonator 118 being coupled to the coaxial antenna module 116 generally toward an upper end portion of the coaxial antenna module 116 (*e.g.*, as viewed in FIG. 2, etc.). And, the tunable match resonator 118, which will be described in more detail hereinafter, is operable to adjust the frequency bandwidth of signals capable of being received and/or transmitted by the antenna assembly 100 (*e.g.*, by the coaxial antenna module 116, etc.).

[0027] The illustrated coaxial antenna module 116 is a double array quarter-wave coaxial antenna module, having first and second generally tubular-shaped radiating elements 122 and 124 (also termed, conductors, etc.) oriented within the housing 104 of the antenna assembly 100 in a generally stacked configuration. The first and second radiating elements 122 and 124 each generally define an open-ended radiating sleeve (or, radiating tube, etc.). And, the first radiating element 122 is located toward a lower end portion of the housing 104 (as viewed in FIG. 2), and the second radiating element 124 is located toward a longitudinal center of the housing 104, generally above the first radiating element 122 (as viewed in FIG. 2). In other example embodiments, antenna assemblies may include coaxial antenna modules other than double array half-wave dipole coaxial antenna modules, may include antenna modules with less than or more than two radiating elements, etc.

[0028] Foam cushions 126 are provided around each of the first and second radiating elements 122 and 124 (generally between the radiating elements 122 and 124 and the housing 104 (FIG. 2)) to, for example, help centrally stabilize the radiating elements 122 and 124 within the housing 104 (*e.g.*, help stabilize movements of the radiating elements 122 and 124, etc.) and/or help absorb vibrations (*e.g.*, within the housing 104, etc.). And, an insulator 128 (*e.g.*, a dual array split insulator formed from suitable dielectric materials, etc.) is provided generally between the first and second radiating elements 122 and 124 for separating the first and second radiating elements 122 and 124. For example, the insulator 128 may operate to electrically insulate the first radiating element 122 from the second radiating element 124 during operation.

[0029] With continued reference to FIGS. 2 and 3, the illustrated coaxial antenna module 116 also generally includes a transmission line 132 (also termed, a feed line, etc.) extending generally through the first and second radiating elements 122 and 124 (and through the insulator 128 provided generally between the first and second radiating elements 122 and 124). The transmission line 132 is coupled (*e.g.*, capacitively coupled, etc.) to each of the first and second radiating elements 122 and 124, and is configured to electrically couple the antenna assembly 100 (*e.g.*, the coaxial

antenna module 116, the match resonator 118, etc.) to one or more components of a base station to which the antenna assembly 100 may be mounted (*e.g.*, to one or more printed circuit boards of a receiver, a transmitter, etc. of the base station, etc.). As such, the transmission line 132 may be used as a transmission medium between the antenna assembly 100 and the base station.

[0030] The illustrated transmission line 132 generally includes a hard line coaxial cable 134 (*e.g.*, a radiating rod, etc.) and a coaxial connector 136. The hard line coaxial cable 134 is disposed generally within the base sleeve 102 and the housing 104 of the antenna assembly 100, and extends generally through the first and second radiating elements 122 and 124. The coaxial connector 136 is provided toward a lower end portion of the hard line coaxial cable 134 (*e.g.*, as viewed in FIG. 2, etc.) and extends generally outwardly from the base sleeve 102 (*see also*, FIG. 1). The coaxial connector 136 is configured to electrically couple the hard line coaxial cable 134 (and the antenna assembly 100) to a base station, as desired. The hard line coaxial cable 134 may include any suitable coaxial cable. For example, the hard line coaxial cable 134 may include a coaxial cable having a metallic (*e.g.*, copper, copper plated aluminum, etc.) central conductor, a dielectric insulator (*e.g.*, a polyethylene foam, etc.) surrounding the central conductor, a metallic (*e.g.*, copper, silver, gold, aluminum, combinations thereof, etc.) shield surrounding the dielectric insulator, and a polyvinyl chloride jacket surrounding the metallic shield. And, the coaxial connector 136 may include any suitable connector within the scope of the present disclosure (*e.g.*, an I-PEX connector, a SMA connector, a MMCX connector etc.).

[0031] A bushing 138 is provided toward a lower end portion of the base sleeve 102 for supporting the transmission line 132 (*e.g.*, the coaxial connector 136, etc.) in a generally radially-centered position within the base sleeve 102 (FIG. 2). And, first and second supports 142 and 144 (*e.g.*, first and second support bases, etc.) are provided generally within the respective first and second radiating elements 122 and 124 (FIG. 2) for supporting the transmission line 132 (*e.g.*, the hard line coaxial cable 134 extending from the coaxial connector 136, etc.) in the generally radially-centered position within the first and second radiating elements 122 and 124 (*e.g.*, generally along

longitudinal axes of the first and second radiating elements 122 and 124, etc.). The first and second supports 142 and 144 may also help support (*e.g.*, help structurally support, etc.) the respective first and second radiating elements 122 and 124 in their generally tubular shapes against, for example, undesired deformation, etc.

[0032] With additional reference now to FIGS. 4 through 6, the tunable match resonator 118 of the illustrated antenna assembly 100 generally includes a radiating element 148 (also termed, a conductor) disposed within an upper end portion of the housing 104 (*e.g.*, as viewed in FIG. 2, etc.). The match resonator radiating element 148 is oriented within the housing 104 in generally stacked alignment with the first and second radiating elements 122 and 124 of the coaxial antenna module 116. And, the illustrated match resonator radiating element 148 includes a generally tubular-shape (similar to that of the first and second radiating elements 122 and 124 of the coaxial antenna module 116) such that it generally defines an open-ended radiating sleeve (or, radiating tube, etc.).

[0033] An insulator 150 (*e.g.*, a radiator rod insulator formed from suitable dielectric materials, etc.) (FIG. 2) is provided generally between the second radiating element 124 of the coaxial antenna module 116 and the match resonator radiating element 148 for separating the second radiating element 124 from the match resonator radiating element 148. The insulator 150 may, for example, operate to electrically insulate the second radiating element 124 from the match resonator radiating element 148. And, a foam cushion 152 (FIGS. 2 and 3) is provided around the match resonator radiating element 148 (generally between the match resonator radiating element 148 and the housing 104) to, for example, help centrally stabilize the match resonator radiating element 148 within the housing 104 (*e.g.*, help stabilize movements of the match resonator radiating element 148, etc.) and/or help absorb vibrations (*e.g.*, within the housing 104, etc.).

[0034] The tunable match resonator 118 also generally includes a loading rod 154 and a balun 156 (broadly, a transformer) coupled to the loading rod 154. The loading rod 154 is disposed generally within (and extends generally through) the match resonator radiating element 148. And, the balun 156 is coupled to the loading rod 154 generally within the match

resonator radiating element 148, and is adjustable relative to the loading rod 154 (*e.g.*, within the match resonator radiating element 148, etc.) for varying a position of the balun 156 relative to the loading rod 154 (i.e., such that the loading rod 154 can accommodate a variable position of the balun 156). This allows the tunable match resonator 118 to vary input impedance, for example, of a radio frequency signal (*e.g.*, received and/or transmitted by the antenna assembly 100, etc.) by changing an electrical field within the match resonator radiating element 148, and thereby allows the tunable match resonator 118 to adjust the frequency bandwidth of signals capable of being received and/or transmitted by the antenna assembly 100.

[0035] In the illustrated embodiment, for example, the balun 156 is coupled to the loading rod 154 by a threaded connection (*e.g.*, via external threads 158 of the loading rod 154 and mating internal threads 160 of the balun 156 (*e.g.*, located within a channel extending through the balun 156, etc.) (FIG. 4), etc.). This allows the balun 156 to be moved longitudinally along the loading rod 154 by, for example, rotating the balun 156 relative to the loading rod 154 (such that the threaded connection supports movement of the balun longitudinally along the loading rod 154). A set screw 164 is provided for selectively holding (*e.g.*, releasably securing, etc.) the balun 156 in a desired position along the loading rod 154 to adjust the balun 156 and thus vary the input impedance of the signals received and/or transmitted by the antenna assembly 100. The balun 156 may be coupled to the loading rod 154 other than by a threaded connection (*e.g.*, by a friction-based coupling, a sliding connection, etc.) within the scope of the present disclosure.

[0036] With continued reference to FIGS. 4 through 6, a bushing 166 (*e.g.*, a dielectric load bushing formed from a dielectric material, etc.) is located within the match resonator radiating element 148 (generally above the balun 156, as viewed in FIG. 4). The bushing 166 is coupled to the balun 156 (*e.g.*, by a pressure compression fit, etc.) such that the bushing 166 is moveable with the balun 156 relative to the loading rod 154. As such, the busing 166 may help structurally support movement of the balun 156 relative to the loading rod 154 within the match resonator radiating element 148. The bushing 166 can help increase the sensitivity of the balun 156 to obtain a fine tuning capability of the antenna assembly 100.

[0037] A support 168 (*e.g.*, a support base, etc.) is located generally within the match resonator radiating element 148 for further supporting the loading rod 154 in a generally radially-centered position within the match resonator radiating element 148 (*e.g.*, generally along a longitudinal axis of the match resonator radiating element 148, etc.). The support 168 may also help support (*e.g.*, help structurally support, etc.) the match resonator radiating element 148 in its generally tubular shape against, for example, undesired deformation, etc.

[0038] Referring again to FIG. 2, the loading rod 154 of the tunable match resonator 118 generally couples the tunable match resonator 118 to the coaxial antenna module 116 for joint operation. For example, the hard line coaxial cable 134 of the coaxial antenna module 116 extends generally through the insulator 150 positioned between the second radiating element 124 of the coaxial antenna module 116 and couples to a lower end portion of the match resonator's loading rod 154 (*e.g.*, a central conductor of the hard line coaxial cable 134 couples to (*e.g.*, via a welded connection, etc.) the loading rod 154, etc.). Accordingly, this positions the tunable match resonator 118 to operate with the coaxial antenna module 116 to vary the input impedance of the signals received and/or transmitted by the antenna assembly 100 (and the coaxial antenna module 116).

[0039] It should be appreciated that the first and/or second radiating elements 122 and/or 124 of the coaxial antenna module 116 and/or the match resonator radiating element 148 may be formed from any suitable electrically-conductive material such as, for example, copper, brass, bronze, nickel silver, stainless steel, phosphorous bronze, beryllium copper, etc. within the scope of the present disclosure. And, the radiating elements 122, 124, and/or 148 may be constructed by cutting, stamping, etc. the radiating elements 122, 124, and/or 148 from a sheet of such suitable material and then processed to a desired shape (*e.g.*, rolled to a tubular shape, etc.).

[0040] With reference now to FIG. 7, voltage standing wave ratios (VSWRs) are illustrated in graph 180 by graphed line 182 for the example antenna assembly 100 described above and illustrated in FIGS. 1-6 over a frequency bandwidth of about 800 MHz to about 3000 MHz (with an intermediate frequency bandwidth (IFBW) of about 70 kilohertz).

[0041] As shown in FIG. 7, the antenna assembly 100 can operate at frequencies within multiple different bandwidths at VSWRs of at least about 2.5:1 or less. For example, the antenna assembly 100 can operate at frequencies within bandwidths ranging from about 804 MHz to about 829 MHz, from about 806 MHz to about 941 MHz, from about 855 MHz to about 980 MHz, from about 1660 MHz to about 1910 MHz, from about 1670 MHz to about 1920 MHz, from about 1790 MHz to about 2010 MHz, from about 1920 MHz to about 2170 MHz, and from about 2400 MHz to about 2500 MHz at such VSWRs. Reference numeral 184 indicates locations on the graph below which the antenna assembly 100 has a VSWR of about 2.5:1 or less. And, Table 1 identifies some example VSWR at different frequencies at eight reference locations shown in FIG. 7.

TABLE 1

Exemplary Voltage Standing Wave Ratios (VSWR)

Reference Point	Frequency (MHz)	VSWR
1	821	1.7676:1
2	896	1.2924:1
3	880	1.1317:1
4	960	2.0436:1
5	1850	1.6114:1
6	1990	1.2477:1
7	2400	1.6139:1
8	2500	1.1952:1

[0042] Example antenna assemblies (*e.g.*, 100, etc.) of the present disclosure also exhibit gains ranging from unity to about 3 decibels isotropic (dBi). And, antenna assemblies (*e.g.*, 100, etc.) of the present disclosure may provide capabilities of matching the transmission lines (*e.g.*, 132, etc.) of the coaxial antenna modules (*e.g.*, 116, etc.) using the variable features of the tunable match resonators (*e.g.*, 118, etc.). For example, the tunable match resonators (*e.g.*, 118, etc.) may allow for the antenna assemblies (*e.g.*, 100, etc.) to be easily tuned to multiple resonant frequencies and bandwidths (*e.g.*,

those associated with the AMPS, GSM, PCS, KPCS, DCS, IDEN, UMTS, and ISM systems; those meeting office of emergency management requirements; those used in commercial markets, etc.). And, it should thus be appreciated that the antenna assemblies (*e.g.*, 100, etc.) are capable of operating (*e.g.*, capable of receiving and/or transmitting signals, etc.) within each of the AMPS, GSM, PCS, KPCS, DCS, IDEN, UMTS, and ISM systems.

[0043] Example embodiments are provided so that this disclosure will be thorough, and will fully convey the scope to those who are skilled in the art. Numerous specific details are set forth such as examples of specific components, devices, and methods, to provide a thorough understanding of embodiments of the present disclosure. It will be apparent to those skilled in the art that specific details need not be employed, that example embodiments may be embodied in many different forms and that neither should be construed to limit the scope of the disclosure. In some example embodiments, well-known processes, well-known device structures, and well-known technologies are not described in detail. Moreover, any one or more aspects of the present disclosure may be implemented individually or in any combination with any one or more of the other aspects of the present disclosure.

[0044] The terminology used herein is for the purpose of describing particular example embodiments only and is not intended to be limiting. As used herein, the term "and/or" includes any and all combinations of one or more of the associated listed items. Also as used herein, the singular forms "a", "an" and "the" may be intended to include the plural forms as well, unless the context clearly indicates otherwise. The terms "comprises," "comprising," “including,” and “having,” are inclusive and therefore specify the presence of stated features, integers, steps, operations, elements, and/or components, but do not preclude the presence or addition of one or more other features, integers, steps, operations, elements, components, and/or groups thereof. The method steps, processes, and operations described herein are not to be construed as necessarily requiring their performance in the particular order discussed or illustrated, unless specifically identified as an order of performance. It is also to be understood that additional or alternative steps may be employed.

[0045] When an element or layer is referred to as being "on", “engaged to”, "connected to" or "coupled to" another element or layer, it may be directly on, engaged, connected or coupled to the other element or layer, or intervening elements or layers may be present. In contrast, when an element is referred to as being "directly on," “directly engaged to”, "directly connected to" or "directly coupled to" another element or layer, there may be no intervening elements or layers present. Other words used to describe the relationship between elements should be interpreted in a like fashion (*e.g.*, “between” versus “directly between,” “adjacent” versus “directly adjacent,” etc.). As used herein, the term "and/or" includes any and all combinations of one or more of the associated listed items.

[0046] Although the terms first, second, third, etc. may be used herein to describe various elements, components, regions, layers and/or sections, these elements, components, regions, layers and/or sections should not be limited by these terms. These terms may be only used to distinguish one element, component, region, layer or section from another region, layer or section. Terms such as “first,” “second,” and other numerical terms, “next,” etc., when used herein, do not imply a sequence or order unless clearly indicated by the context. Thus, a first element, component, region, layer or section discussed below could be termed a second element, component, region, layer or section without departing from the teachings of the example embodiments.

[0047] Spatially relative terms, such as “inner,” “outer,” "beneath", "below", "lower", "above", "upper" and the like, may be used herein for ease of description to describe one element or feature's relationship to another element(s) or feature(s) as illustrated in the figures. Spatially relative terms may be intended to encompass different orientations of the device in use or operation in addition to the orientation depicted in the figures. For example, if the device in the figures is turned over, elements described as "below" or "beneath" other elements or features would then be oriented "above" the other elements or features. Thus, the example term "below" can encompass both an orientation of above and below. The device may be otherwise oriented (rotated 90 degrees or at other orientations) and the spatially relative descriptors used herein interpreted accordingly.

[0048] The disclosure herein of particular values and particular ranges of values for given parameters are not exclusive of other values and ranges of values that may be useful in one or more of the examples disclosed herein. Moreover, it is envisioned that any two particular values for a specific parameter stated herein may define the endpoints of a range of values that may be suitable for the given parameter (*i.e.*, the disclosure of a first value and a second value for a given parameter can be interpreted as disclosing that any value between the first and second values could also be employed for the given parameter). Similarly, it is envisioned that disclosure of two or more ranges of values for a parameter (whether such ranges are nested, overlapping or distinct) subsume all possible combination of ranges for the value that might be claimed using endpoints of the disclosed ranges.

[0049] The foregoing description of the embodiments has been provided for purposes of illustration and description. It is not intended to be exhaustive or to limit the invention. Individual elements or features of a particular embodiment are generally not limited to that particular embodiment, but, where applicable, are interchangeable and can be used in a selected embodiment, even if not specifically shown or described. The same may also be varied in many ways. Such variations are not to be regarded as a departure from the invention, and all such modifications are intended to be included within the scope of the invention.

CLAIMS

What is claimed is:

1. A multi-band antenna assembly operable to receive and/or transmit signals at one or more frequencies, the antenna assembly comprising:

at least two radiating elements;

a transmission line coupled to each of the at least two radiating elements; and

a tunable match resonator coupled to the transmission line and operable to vary input impedance of a signal received and/or transmitted by the antenna assembly by changing an electrical field within the tunable match resonator.

2. The antenna assembly of claim 1, wherein the at least two radiating elements are oriented in a generally stacked configuration.

3. The antenna assembly of claim 1 or 2, wherein the at least two radiating elements include two radiating elements that each define a radiating sleeve, and wherein the transmission line extends generally through each said radiating sleeve.

4. The antenna assembly of any one of the preceding claims, wherein the tunable match resonator includes a match resonator radiating element and a transformer moveable within the match resonator radiating element for varying input impedance of a signal received and/or transmitted by the antenna assembly by changing an electrical field within the tunable match resonator.

5. The antenna assembly of claim 4, wherein the transformer includes a balun and a dielectric load bushing.

6. The antenna assembly of claim 5, wherein the match resonator radiating element defines a radiating sleeve, and wherein the tunable match resonator further includes a loading rod coupled to the balun and dielectric load bushing, and extending generally through said radiating sleeve.

7. The antenna assembly of claim 6, wherein the balun and the dielectric load bushing are coupled to the loading rod by a threaded connection.

8. The antenna assembly of any one of the preceding claims, wherein the tunable match resonator is operable to adjust the frequency bandwidth of signals capable of being received and/or transmitted by the antenna assembly.

9. The antenna assembly of any one of the preceding claims, wherein the tunable match resonator is operable to adjust the frequency bandwidth of signals capable of being received and/or transmitted by the antenna assembly at least one or more of a bandwidth between about 804 MHz and about 829 MHz, a bandwidth between about 806 MHz and about 941 MHz, a bandwidth between about 855 MHz and about 980 MHz, to a bandwidth between about 1660 MHz and about 1910 MHz, a bandwidth between about 1670 MHz and about 1920 MHz, a bandwidth between about 1790 MHz and about 2010 MHz, a bandwidth between about 1920 MHz and about 2170 MHz, and a bandwidth between about 2400 MHz and about 2500 MHz.

10. The antenna assembly of any one of the preceding claims, wherein the transmission line includes a coaxial cable.

11. The antenna assembly of any one of the preceding claims, wherein the transmission line is capacitively coupled to each of the at least two radiating elements.

12. A network including the antenna assembly of any one of the preceding claims.

13. A system including the antenna assembly of any one of the preceding claims.

14. A tunable match resonator for an antenna assembly, the tunable match resonator comprising:

a generally tubular radiating element;

a loading rod disposed at least partially within the radiating element;

a balun coupled to the loading rod; and

a dielectric load bushing coupled to the balun;

wherein the balun and the dielectric load bushing are disposed at least partially within the radiating element, the balun and the dielectric load bushing being moveable relative to the loading rod for varying input impedance of a

signal received and/or transmitted by an antenna assembly by changing an electrical field within the tunable match resonator;

whereby the tunable match resonator is operable to adjust the frequency bandwidth of signals capable of being received and/or transmitted by an antenna assembly.

15. The tunable match resonator of claim 14, wherein the balun is coupled to the loading rod by a threaded connection.

16. The tunable match resonator of claim 14 or 15, wherein the dielectric load bushing is coupled to the balun by a pressure compression fit.

17. The tunable match resonator of any one of claims 14-16, further comprising a support disposed at least partially within the radiating element, the support being configured to support the loading rod along a longitudinal axis of the radiating element.

18. The tunable match resonator of any one of claims 14-17, wherein the tunable match resonator is operable to adjust the frequency bandwidth of signals capable of being received and/or transmitted by an antenna assembly to a bandwidth between about 804 MHz and about 829 MHz, to a bandwidth between about 806 MHz and about 941 MHz, to a bandwidth between about 855 MHz and about 980 MHz, to a bandwidth between about 1660 MHz and about 1910 MHz, to a bandwidth between about 1670 MHz and about 1920 MHz, to a bandwidth between about 1790 MHz and about 2010 MHz, to a bandwidth between about 1920 MHz and about 2170 MHz, and/or to a bandwidth between about 2400 MHz and about 2500 MHz.

19. A multi-band array antenna assembly operable to receive and/or transmit signals at one or more frequencies, the array antenna assembly comprising:

first, second, and third open-ended radiating tubes oriented in a generally stacked configuration;

a coaxial cable extending generally through each of the first and second radiating tubes;

a loading rod coupled to the coaxial cable and extending generally through the third radiating tube;

a balun coupled to the loading rod generally within the third radiating tube and moveable longitudinally relative to the loading rod within the third radiating tube; and

a dielectric load bushing coupled to the balun;

wherein the balun and the dielectric load bushing are operable to vary input impedance of a signal received and/or transmitted by the array antenna assembly by changing an electrical field within the third radiating tube to thereby adjust the frequency bandwidth of signals capable of being received and/or transmitted by the array antenna assembly.

20. The array antenna assembly of claim 19, wherein the array antenna assembly is capable of receiving and/or transmitting signals within the Advanced Mobile Phone System (AMPS), Global System for Mobile communications (GSM), Personal Communications Service (PCS) system, Digital Cellular System (DCS), Integrated Digital Enhanced Network (iDEN), Universal Mobile Telecommunications System (UMTS), and/or Industrial, Scientific and Medical (ISM) system.

21. The array antenna assembly of claim 19, wherein the array antenna assembly is capable of receiving and/or transmitting signals within each of the Advanced Mobile Phone System (AMPS), Global System for Mobile communications (GSM), Personal Communications Service (PCS) system, Digital Cellular System (DCS), Integrated Digital Enhanced Network (iDEN), Universal Mobile Telecommunications System (UMTS), and Industrial, Scientific and Medical (ISM) system, and wherein the array antenna assembly exhibits a VSWR of about 2.5 or less for frequencies within each system.

22. The array antenna assembly of claim 21, wherein the array antenna assembly exhibits gain of at least about 3 decibels isotropic for frequencies within each system.

23. A method comprising providing a multi-band antenna assembly suitable for use with a base station subsystem, wherein the multi-band antenna assembly includes at least two radiating elements, a transmission line coupled to each of the at least two radiating elements, and a tunable match resonator coupled to the transmission line and operable to vary input impedance of at least one or more signals received and/or transmitted by the

multi-band antenna assembly by changing an electrical field within the tunable match resonator.

24. The method of claim 23, further comprising coupling the multi-band antenna assembly to a base station subsystem.

25. The method of claim 23 or 24, further comprising moving a balun and/or a dielectric load bushing of the tunable match resonator to vary the input impedance of the at least one or more signals received and/or transmitted by the multi-band antenna assembly and to thereby adjust the frequency bandwidth of signals capable of being received and/or transmitted by the multi-band antenna assembly.

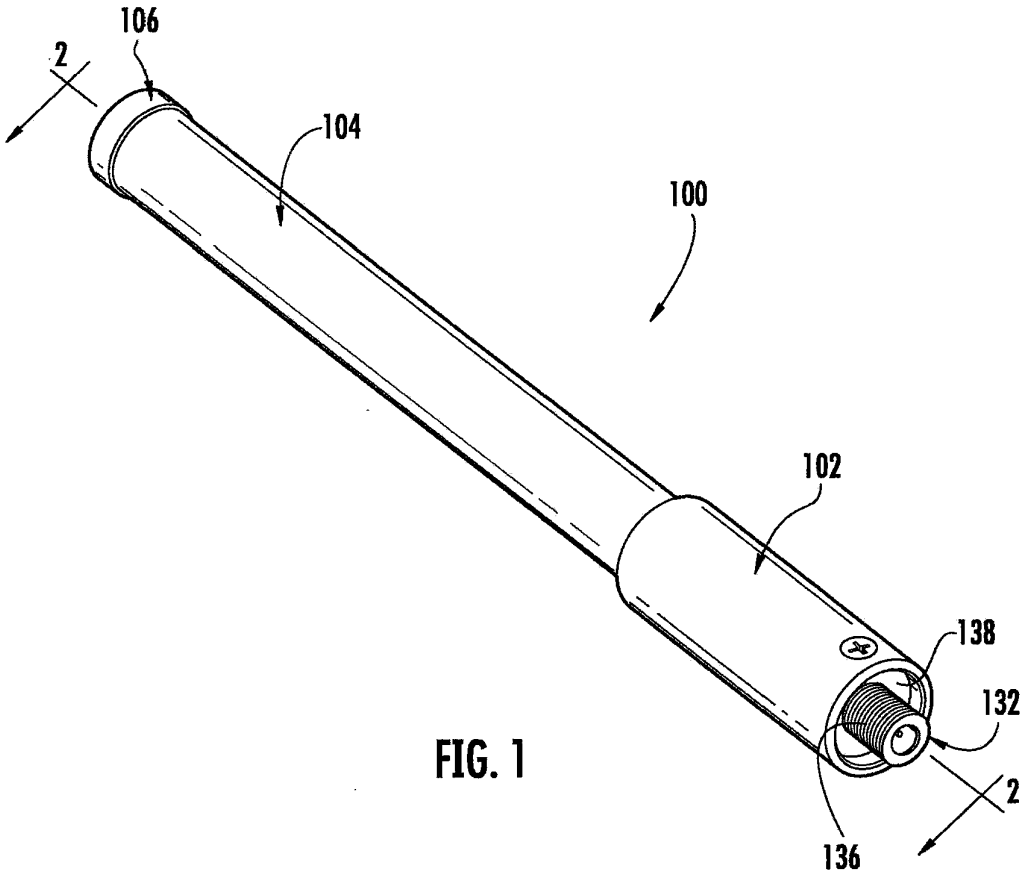

FIG. 1

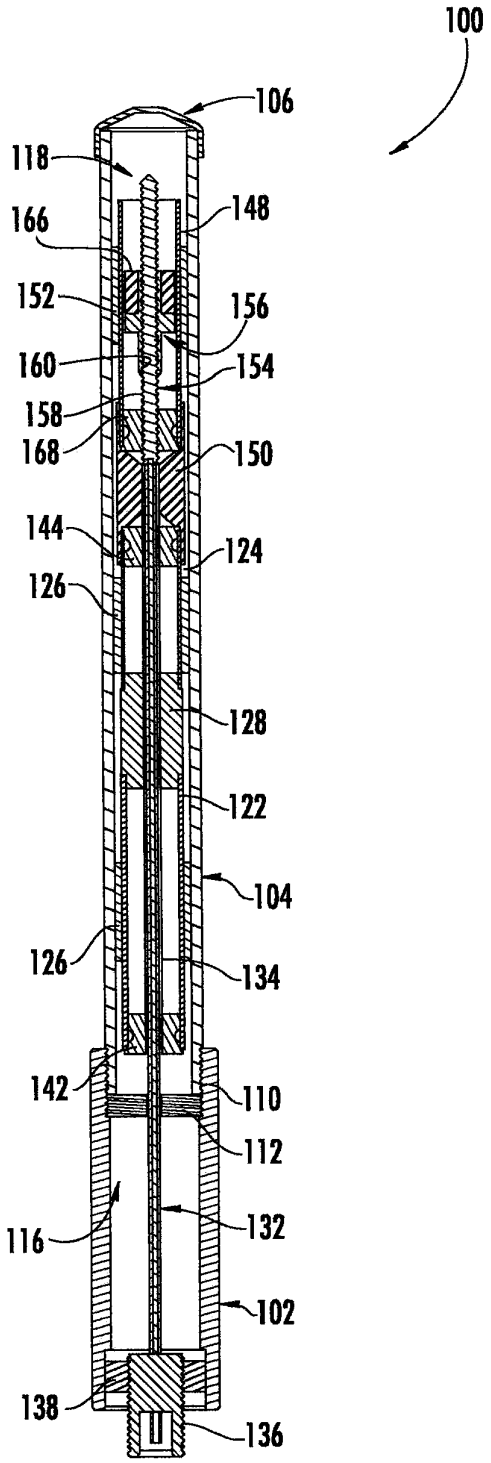
100
106
118
148
166
152
156
160
154
158
168
150
144
124
126
128
122
104
126
134
142
110
112
116
132
102
138
136

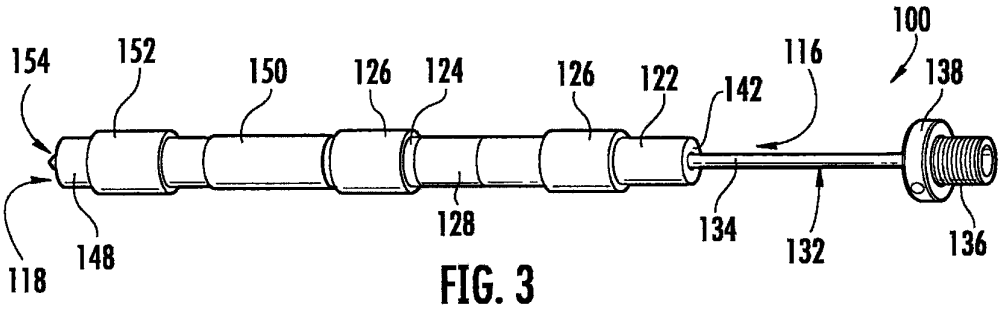
154
152
150
126
124
126
122
142
116
100
138
118
148
128
134
132
136

FIG. 3

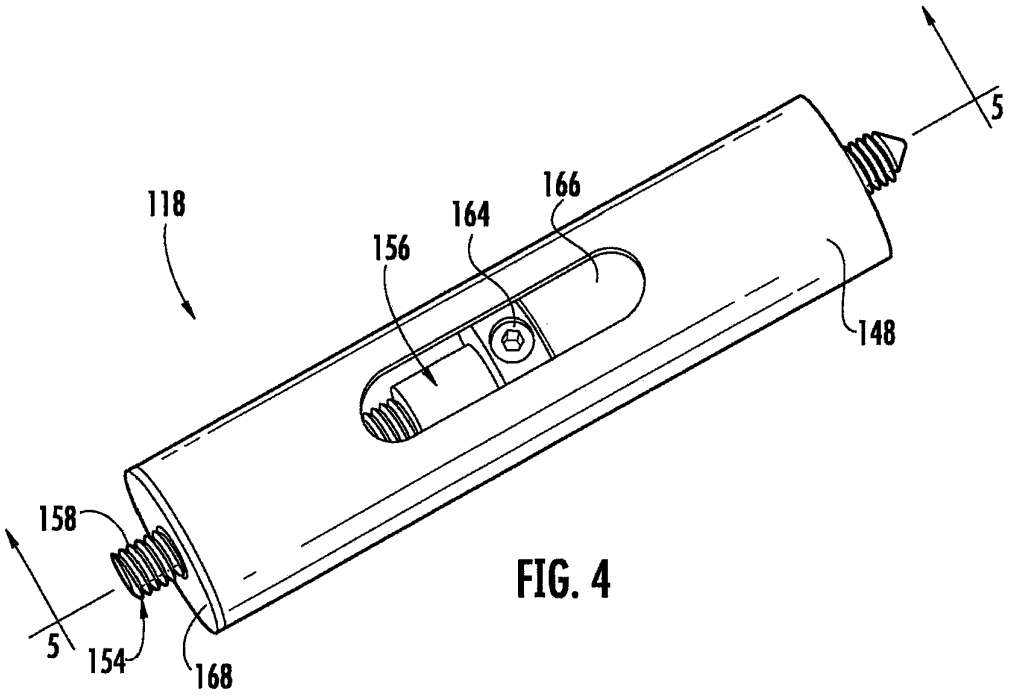

FIG. 4

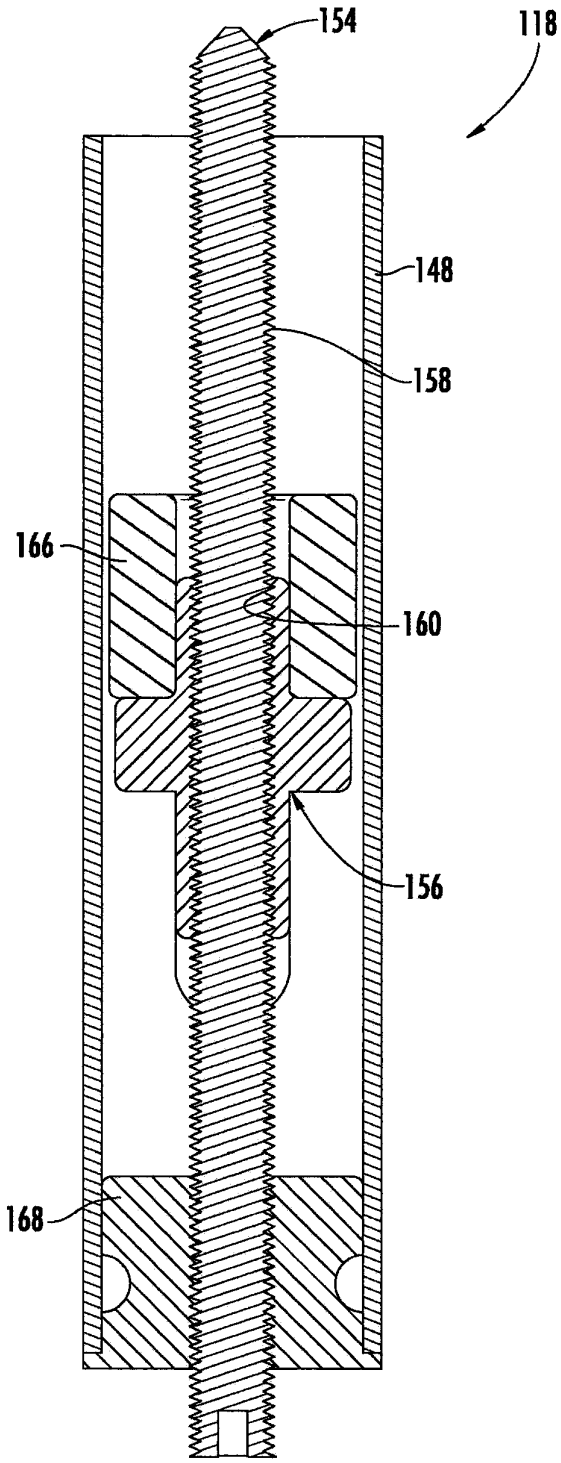

FIG. 5

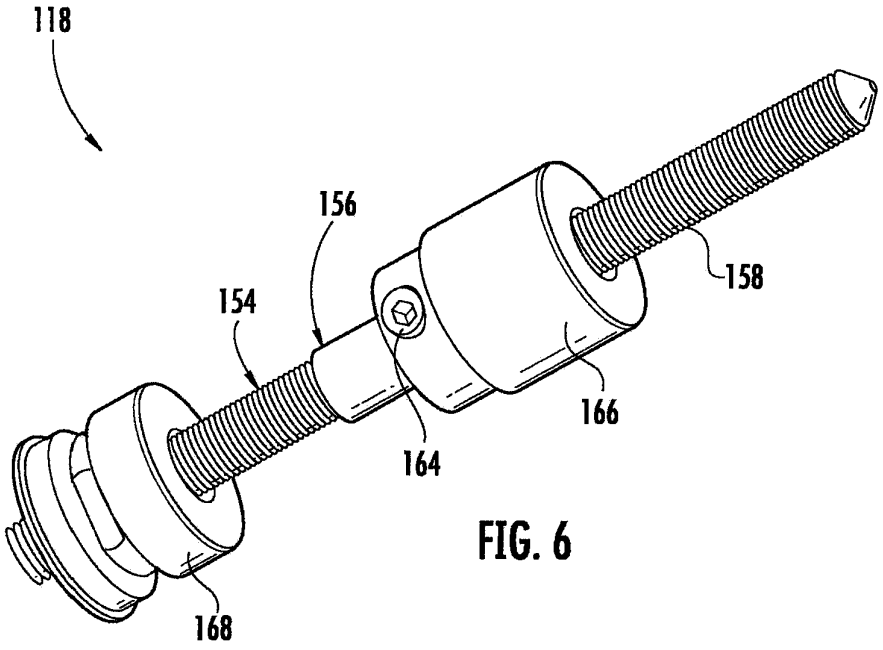

FIG. 6

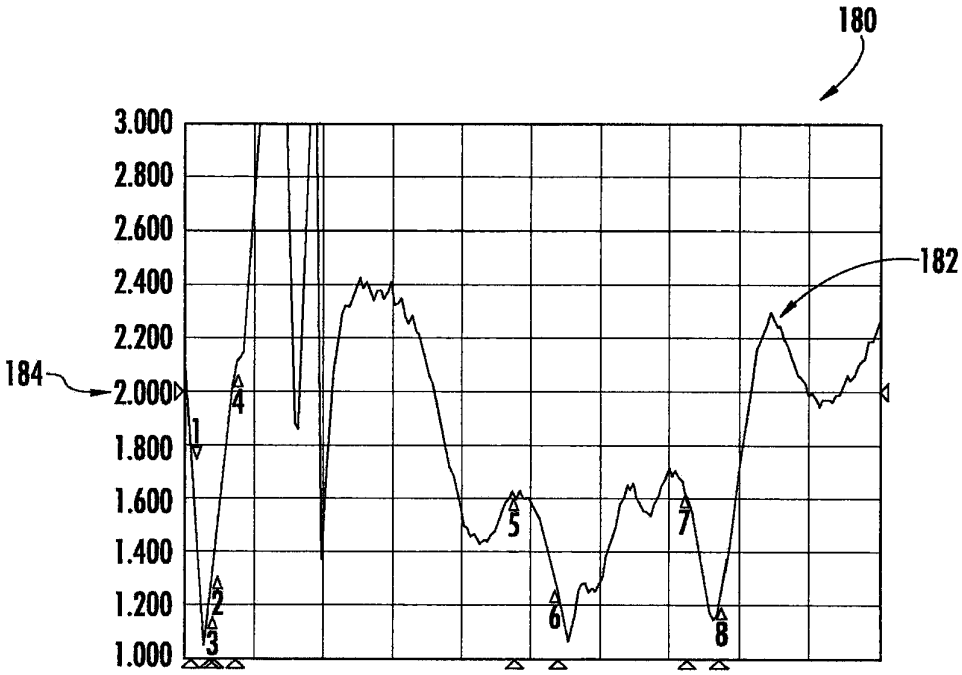
180
182
184
3.000
2.800
2.600
2.400
2.200
2.000
1.800
1.600
1.400
1.200
1.000
1
2
3
4
5
6
7
8

FIG. 7

PATENT COOPERATION TREATY

From the INTERNATIONAL SEARCHING AUTHORITY

To:

FUSSNER ANTHONY G.

HARNESS, DICKEY & PIERCE, P.L.C. 7700 BONHOMME, SUITE 400 ST. LOUIS MO 63105 USA

Matter no. 9062E-000438/WO/POA
Action Due Date Final Date
Actiddup'd Domcmt Search Rpt Response 12/29/10 4/29/11
Atty AGF DKT/Verify HB

PCT

NOTIFICATION OF TRANSMITTAL OF THE INTERNATIONAL SEARCH REPORT AND THE WRITTEN OPINION OF THE INTERNATIONAL SEARCHING AUTHORITY, OR THE DECLARATION

(PCT Rule 44.1)

Applicant's or agent's file reference 9062E-438/POA	Date of mailing *(day/month/year)* 29 OCTOBER 2010 (29.10.2010) **FOR FURTHER ACTION** See paragraphs 1 and 4 below
International application No. **PCT/US2010/028172**	International filing date *(day/month/year)* **22 MARCH 2010 (22.03.2010)**

Applicant

LAIRD TECHNOLOGIES, INC. et al

1. ☒ The applicant is hereby notified that the international search report and the written opinion of the International Searching Authority have been established and are transmitted herewith.

   Filing of amendments and statement under Article 19:

   The applicant is entitled, if he so wishes, to amend the claims of the international application (see Rule 46):

   When? The time limit for filing such amendments is normally two months from the date of transmittal of the international search report.

   Where? Directly to the International Bureau of WIPO, 34 chemin des Colombettes 1211 Geneva 20, Switzerland, Facsimile No.: +41 22 338 82 70

   For more detailed instructions, see *PCT Applicant's Guide*, International Phase, paragraphs 9.004 . 9.011.

2. ☐ The applicant is hereby notified that no international search report will be established and that the declaration under Article 17(2)(a) to that effect and the written opinion of the International Searching Authority are transmitted herewith.

3. ☐ **With regard to any protest** against payment of (an) additional fee(s) under Rule 40.2, the applicant is notified that:

   ☐ the protest together with the decision thereon has been transmitted to the International Bureau together with any request to forward the texts of both the protest and the decision thereon to the designated Offices.

   ☐ no decision has been made yet on the protest; the applicant will be notified as soon as a decision is made.

4. **Reminders**

The applicant may submit comments on an informal basis on the written opinion of the International Searching Authority to the International Bureau. The International Bureau will send a copy of such comments to all designated Offices unless an international preliminary examination report has been or is to be established. Following the expiration of 30 months from the priority date, these comments will also be made available to the public.

Shortly after the expiration of **18 months** from the priority date, the international application will be published by the International Bureau. If the applicant wishes to avoid or postpone publication, a notice of withdrawal of the international application, or of the priority claim, must reach the International Bureau before the completion of the technical preparations for international publication (Rules 90bis.1 and 90bis.3).

Within **19 months** from the priority date, but only in respect of some designated Offices, a demand for international preliminary examination must be filed if the applicant wishes to postpone the entry into the national phase **until 30 months** from the priority date (in some Offices even later); otherwise, the applicant must, **within 20 months** from the priority date, perform the prescribed acts for entry into the national phase before those designated Offices.
In respect of other designated Offices, the time limit of **30 months** (or later) will apply even if no demand is filed within 19months.

For details about the applicable time limits, Office by Office, see www.wipo.int/pct/en/texts/time_limits.html and the PCT Applicant's Guide, National Chapters.

Name and mailing address of the ISA/KR Korean Intellectual Property Office Government Complex-Daejeon, 139 Seonsa-ro, Seo-gu, Daejeon 302-701, Republic of Korea Facsimile No. 82-42-472-7140	Authorized officer COMMISSIONER Telephone No. 82-42-481-8754

* Attention

Copies of the documents cited in the international search report can be searched in the following Korean Intellectual Property Office English website for three months from the date of mailing of the international search report.

http://www.kipo.go.kr/en/ => Patent Search => PCT-Service

ID : PCT international application number
PW : **A5IYU0A0**

Inquiries related to PCT International Search Report or Written Opinion prepared by KIPO as an International Searching Authority can be answered not only by KIPO but also through IPKC (Intellectual Property Korea Center), located in Vienna, VA, which functions as a PCT Help Desk for PCT applicants.

Homepage: http://www.ipkcenter.com
Email: ipkc@ipkcenter.com
Phone: +1 703 388 1066
Fax: +1 703 388 1084

PATENT COOPERATION TREATY

PCT

INTERNATIONAL SEARCH REPORT

(PCT Article 18 and Rules 43 and 44)

Applicant's or agent's file reference	**FOR FURTHER ACTION**	see Form PCT/ISA/220 as well as, where applicable, item 5 below.
9062E-438/POA		
International application No.	International filing date *(day/month/year)*	(Earliest) Priority Date *(day/month/year)*
PCT/US2010/028172	**22 MARCH 2010 (22.03.2010)**	26 MARCH 2009 (26.03.2009)

Applicant

LAIRD TECHNOLOGIES, INC. et al

This International search report has been prepared by this International Searching Authority and is transmitted to the applicant according to Article 18. A copy is being transmitted to the International Bureau.

This international search report consists of a total of **4** sheets.

☐ It is also accompanied by a copy of each prior art document cited in this report.

1. **Basis of the report**
   a. With regard to the **language**, the international search was carried out on the basis of:
      ☒ the international application in the language in which it was filed
      ☐ a translation of the international application into _____, which is the language of a translation furnished for the purposes of international search (Rules 12.3(a) and 23.1(b))
   b. ☐ This international search report has been established taking into account the **rectification of an obvious mistake** authorized by or notified to this Authority under Rule 91 (Rule 43.6*bis*(a)).
   c. ☐ With regard to any **nucleotide and/or amino acid sequence** disclosed in the international application, see Box No. I.
2. ☒ **Certain claims were found unsearchable** (See Box No. II)
3. ☐ **Unity of invention is lacking** (See Box No. III)
4. With regard to the **title,**
   ☒ the text is approved as submitted by the applicant.
   ☐ the text has been established by this Authority to read as follows:

5. With regard to the **abstract,**
   ☒ the text is approved as submitted by the applicant.
   ☐ the text has been established, according to Rule 38.2, by this Authority as it appears in Box No. IV. The applicant may, within one month from the date of mailing of this international search report, submit comments to this Authority.
6. With regard to the drawings,
   a. the figure of the **drawings** to be published with the abstract is Figure No. **1**
      ☒ as suggested by the applicant.
      ☐ as selected by this Authority, because the applicant failed to suggest a figure.
      ☐ as selected by this Authority, because this figure better characterizes the invention.
   b. ☐ none of the figure is to be published with the abstract.

INTERNATIONAL SEARCH REPORT

International application No.
PCT/US2010/028172

Box No. II Observations where certain claims were found unsearchable (Continuation of item 2 of first sheet)

This international search report has not been established in respect of certain claims under Article 17(2)(a) for the following reasons:

1. ☐ Claims Nos.:
because they relate to subject matter not required to be searched by this Authority, namely:

2. ☒ Claims Nos.: 5-7
because they relate to parts of the international application that do not comply with the prescribed requirements to such an extent that no meaningful international search can be carried out, specifically:

The claims 5-7 are too unclear to make meaningful search possible because the claims 5-7 refer to claim 4, violating PCT Rule 6.4(a).

3. ☒ Claims Nos.: 4, 8-13, 17, 18
because they are dependent claims and are not drafted in accordance with the second and third sentences of Rule 6.4(a).

Box No. III Observations where unity of invention is lacking (Continuation of item 3 of first sheet)

This International Searching Authority found multiple inventions in this international application, as follows:

1. ☐ As all required addtional search fees were timely paid by the applicant, this international search report covers all searchable claims.

2. ☐ As all searchable claims could be searched without effort justifying an additional fee, this Authority did not invite payment of any additional fee.

3. ☐ As only some of the required additional search fees were timely paid by the applicant, this international search report covers only those claims for which fees were paid, specifically claims Nos.:

4. ☐ No required additional search fees were timely paid by the applicant. Consequently, this international search report is restricted to the invention first mentioned in the claims; it is covered by claims Nos.:

Remark on Protest

☐ The additional search fees were accompanied by the applicant's protest and, where applicable, the payment of a protest fee.
☐ The additional search fees were accompanied by the applicant's protest but the applicable protest fee was not paid within the time limit specified in the invitation.
☐ No protest accompanied the payment of additional search fees.

INTERNATIONAL SEARCH REPORT

International application No.
PCT/US2010/028172

A. CLASSIFICATION OF SUBJECT MATTER

H01Q 9/30(2006.01)i, H01Q 5/00(2006.01)i, H01Q 9/14(2006.01)i

According to International Patent Classification (IPC) or to both national classification and IPC

B. FIELDS SEARCHED

Minimum documentation searched (classification system followed by classification symbols)

H01Q 9/30; H01Q 9/42; H01Q 9/16; H01Q 5/02; H01Q 1/38; H01Q 1/32; H01Q 9/28; H01Q 1/12; H01Q 5/00; H01Q 9/04; H01Q 1/10; H01Q 5/01; H01Q 9/14

Documentation searched other than minimum documentation to the extent that such documents are included in the fields searched

Korean utility models and applications for utility models
Japanese utility models and applications for utility models

Electronic data base consulted during the international search (name of data base and, where practicable, search terms used)

eKOMPASS(KIPO internal) & Keywords: antenna, sleeve, tun*, match*, resona*, dual, double, triple, quadruple, multi*, band

C. DOCUMENTS CONSIDERED TO BE RELEVANT

Category*	Citation of document, with indication, where appropriate, of the relevant passages	Relevant to claim No.
A	JP 09-036632 A (NIPPON ANTENNA CO LTD) 07 February 1997 See the abstract; figures 1-4; paragraphs 10-20; and claims 1-3	1-3,14-16,19-25
A	JP 2004-254002 A (HARADA IND CO LTD) 09 September 2004 See the abstract; figures 1, 2; paragraphs 22-36; and claims 1-4	1-3,14-16,19-25
A	JP 2003-249817 A (MASPRO DENKOH CORP) 05 September 2003 See the abstract; figures 1-3; paragraphs 6-10; and claims 1, 2	1-3,14-16,19-25
A	US 2004-0017323 A1 (MARTISKAINEN, MATTI et al.) 29 January 2004 See the abstract; figures 1-5C; paragraphs 21-32; and claims 1-9	1-3,14-16,19-25
A	US 2005-0073465 A1 (OLSON, STEVEN C.) 07 April 2005 See the abstract; figures 1-7B; paragraphs 13-26; and claims 1-14	1-3,14-16,19-25
A	JP 2003-318616 A (VERTEX STANDARD CO LTD) 07 November 2003 See the abstract; figures 1-4; paragraphs 13-31; and claims 1-3	1-3,14-16,19-25
A	JP 2005-086794 A (SAKUMA, MASAO) 31 March 2005 See the abstract; figures 1-5; paragraphs 9-13; and claims 1-3	1-3,14-16,19-25

☐ Further documents are listed in the continuation of Box C.

☒ See patent family annex.

* Special categories of cited documents:
"A" document defining the general state of the art which is not considered to be of particular relevance
"E" earlier application or patent but published on or after the international filing date
"L" document which may throw doubts on priority claim(s) or which is cited to establish the publication date of citation or other special reason (as specified)
"O" document referring to an oral disclosure, use, exhibition or other means
"P" document published prior to the international filing date but later than the priority date claimed
"T" later document published after the international filing date or priority date and not in conflict with the application but cited to understand the principle or theory underlying the invention
"X" document of particular relevance; the claimed invention cannot be considered novel or cannot be considered to involve an inventive step when the document is taken alone
"Y" document of particular relevance; the claimed invention cannot be considered to involve an inventive step when the document is combined with one or more other such documents,such combination being obvious to a person skilled in the art
"&" document member of the same patent family

Date of the actual completion of the international search	Date of mailing of the international search report
28 OCTOBER 2010 (28.10.2010)	**29 OCTOBER 2010 (29.10.2010)**

Name and mailing address of the ISA/KR
Korean Intellectual Property Office
Government Complex-Daejeon, 139 Seonsa-ro, Seo-gu, Daejeon 302-701, Republic of Korea
Facsimile No. 82-42-472-7140

Authorized officer
NAM, Yun Kwon
Telephone No. 82-42-481-8357

INTERNATIONAL SEARCH REPORT

Information on patent family members

International application No.
PCT/US2010/028172

Patent document cited in search report	Publication date	Patent family member(s)	Publication date
JP 09-036632 A	07.02.1997	None	
JP 2004-254002 A	09.09.2004	JP 4015571 B2	28.11.2007
JP 2003-249817 A	05.09.2003	JP 4012414 B2	21.11.2007
US 2004-0017323 A1	29.01.2004	US 6828944 B2	07.12.2004
US 2005-0073465 A1	07.04.2005	US 7064729 B2	20.06.2006
JP 2003-318616 A	07.11.2003	JP 3738232 B2	25.01.2006
JP 2005-086794 A	31.03.2005	JP 4427781 B2	10.03.2010

PATENT COOPERATION TREATY

From the
INTERNATIONAL SEARCHING AUTHORITY

To:
FUSSNER ANTHONY G.

HARNESS, DICKEY & PIERCE, P.L.C. 7700
BONHOMME, SUITE 400 ST. LOUIS MO 63105 USA

PCT

WRITTEN OPINION OF THE INTERNATIONAL SEARCHING AUTHORITY

(PCT Rule 43bis.1)

Date of mailing *(day/month/year)*	**29 OCTOBER 2010 (29.10.2010)**
Applicant's or agent's file reference 9062E-438/POA	**FOR FURTHER ACTION** See paragraph 2 below

International application No.	International filing date *(day/month/year)*	Priority date *(day/month/year)*
PCT/US2010/028172	**22 MARCH 2010 (22.03.2010)**	26 MARCH 2009 (26.03.2009)

International Patent Classification (IPC) or both national classification and IPC

H01Q 9/30(2006.01)i, H01Q 5/00(2006.01)i, H01Q 9/14(2006.01)i

Applicant

LAIRD TECHNOLOGIES, INC. et al

1. This opinion contains indications relating to the following items:

- [x] Box No. I Basis of the opinion
- [ ] Box No. II Priority
- [x] Box No. III Non-establishment of opinion with regard to novelty, inventive step and industrial applicability
- [ ] Box No. IV Lack of unity of invention
- [x] Box No. V Reasoned statement under Rule 43bis.1(a)(i) with regard to novelty, inventive step or industrial applicability; citations and explanations supporting such statement
- [ ] Box No. VI Certain documents cited
- [x] Box No. VII Certain defects in the international application
- [ ] Box No. VIII Certain observations on the international application

2. **FURTHER ACTION**

If a demand for international preliminary examination is made, this opinion will be considered to be a written opinion of the International Preliminary Examining Authority ("IPEA") except that this does not apply where the applicant chooses an Authority other than this one to be the IPEA and the chosen IPEA has notified the International Bureau under Rule 66.1bis(b) that written opinions of this International Searching Authority will not be so considered.

If this opinion is, as provided above, considered to be a written opinion of the IPEA, the applicant is invited to submit to the IPEA a written reply together, where appropriate, with amendments, before the expiration of 3 months from the date of mailing of Form PCT/ISA/220 or before the expiration of 22 months from the priority date, whichever expires later.
For further options, see Form PCT/ISA/220.

3. For further details, see notes to Form PCT/ISA/220.

Name and mailing address of the ISA/KR	Date of completion of this opinion	Authorized officer
Korean Intellectual Property Office Government Complex-Daejeon, 139 Seonsa-ro, Seo-gu, Daejeon 302-701, Republic of Korea Facsimile No. 82-42-472-7140	28 OCTOBER 2010 (28.10.2010)	NAM, Yun Kwon Telephone No.82-42-481-8357

WRITTEN OPINION OF THE INTERNATIONAL SEARCHING AUTHORITY

International application No.
PCT/US2010/028172

Box No. I Basis of this opinion

1. With regard to the **language**, this opinion has been established on the basis of :

   ☒ the international application in the language in which it was filed

   ☐ a translation of the international application into _____ , which is the language of a translation furnished for the purposes of international search (Rules 12.3(a) and 23.1(b))

2. ☐ This opinion has been established taking into account the **rectification of an obvious mistake** authorized by or notified to this Authority under Rule 91 (Rule 43*bis*.1(a))

3. With regard to any **nucleotide and/or amino acid sequence** disclosed in the international application, this opinion has been established on the basis of:

   a. a sequence listing filed or furnished
      ☐ on paper
      ☐ in electronic form

   b. time of filing or furnishing
      ☐ contained in the international application as filed.
      ☐ filed together with the international application in electronic form.
      ☐ furnished subsequently to this Authority for the purposes of search.

4. ☐ In addition, in the case that more than one version or copy of a sequence listing has been filed or furnished, the required statements that the information in the subsequent or additioanl copies is identical to that in the application as filed or does not go beyond the application as filed, as appropriate, were furnished.

5. Additional comments:

WRITTEN OPINION OF THE INTERNATIONAL SEARCHING AUTHORITY

International application No.
PCT/US2010/028172

Box No. III Non-establishment of opinion with regard to novelty, inventive step and industrial applicability

The questions whether the claimed invention appears to be novel, to involve an inventive step (to be non obvious), or to be industrially applicable have not been examined in respect of:

☐ the entire international application

☒ claims Nos. 4-13, 17, 18

because:

☐ the said international application, or the said claims Nos. _____ relate to the following subject matter which does not require an international search *(specify)*:

☒ the description, claims or drawings *(indicate particular elements below)* or said claims Nos. See below are so unclear that no meaningful opinion could be formed *(specify)*:

The claims 5-7 are too unclear to make meaningful search possible because the claims 5-7 refer to claim 4, violating PCT Rule 6.4(a).

☐ the claims, or said claims Nos. _____ are so inadequately supported by the description that no meaningful opinion could be formed *(specify)*:

☒ no international search report has been established for said claims Nos. 4-13, 17, 18

☐ a meaningful opinion could not be formed without the sequence listing; the applicant did not, within the prescribed time limit:

☐ furnish a sequence listing on paper complying with the standard provided for in Annex C of the Administrative Instructions, and such listing was not available to the International Searching Authority in a form and manner acceptable to it.

☐ furnish a sequence listing in electronic form complying with the standard provided for in Annex C of the Administrative Instructions, and such listing was not available to the International Searching Authority in a form and manner acceptable to it.

☐ pay the required late furnishing fee for the furnishing of a sequence listing in response to an invitation under Rule 13ter.1(a) or (b).

☐ See Supplemental Box for further details.

WRITTEN OPINION OF THE INTERNATIONAL SEARCHING AUTHORITY

International application No.
PCT/US2010/028172

Box No. V Reasoned statement under Rule 43bis.1(a)(i) with regard to novelty, inventive step or industrial applicability; citations and explanations supporting such statement

1. Statement

Novelty (N)	Claims	1-3,14-16,19-25	YES
	Claims	NONE	NO
Inventive step (IS)	Claims	1-3,14-16,19-25	YES
	Claims	NONE	NO
Industrial applicability (IA)	Claims	1-3,14-16,19-25	YES
	Claims	NONE	NO

2. Citations and explanations :

1. Prior Art

Reference is made in the present opinion to the following document cited in the search report. The numbering is also retained in the further procedure:

D1: JP 09-036632 A (NIPPON ANTENNA CO LTD) 07 February 1997

D2: JP 2004-254002 A (HARADA IND CO LTD) 09 September 2004

D3: JP 2003-318616 A (VERTEX STANDARD CO LTD) 07 November 2003

D1 discloses a three-frequency shared on-vehicle antenna comprising: a connector; a connector joint; insulators; a Sperrtopf; an outer conductor pipe; a core; a first radiator; a second radiator; a insulating washer; a pad A; a trap coil; a joint B; and a outer periphery.

D2 discloses a two-wave shared sleeve antenna comprising: a feeding connector; a feeding line; a choke; a sleeve; and a radiation element part including two types of resonance patterns on a substrate.

D3 discloses an antenna tuner comprising: a fixed assembly including a circular flange, a hollow circular tube with windings of a loading coil, and a fixing block with a connector; and a movable assembly including an antenna coupling tube, a bearing, and an insulator operating tube.

2. Novelty and Inventive Step (PCT Articles 33(2) and 33(3))

2.1. Claims 1-3

The subject matter of claim 1 of the present invention relates to a multi-band antenna assembly comprising: at least two radiating elements; a transmission line; and a tunable match resonator.

Document D1 is regarded as the closest prior art to the subject matter of claim 1. However, None of D1-D3 disclose the tunable match resonator of claim 1. Accordingly, it would not have been obvious to a person skilled in the art to apply the knowledge of these documents individually or in combination in order to create the multi-band antenna assembly of claim 1. Therefore, the subject matter of claim 1 is considered to be novel and to involve an inventive step under PCT Article 33(2) and (3).

Claims 2, 3 are dependent on claim 1 of the present application. Therefore, claims 2, 3 are considered to be novel and to involve an inventive step, because the subject matter of claim 1 is considered to be novel and to involve an inventive step under PCT Article 33(2) and (3).

(Continued on the Supplemental Box.)

WRITTEN OPINION OF THE
INTERNATIONAL SEARCHING AUTHORITY

International application No.
PCT/US2010/028172

Box No. VII Certain defects in the international application

The following defects in the form or contents of the international application have been noted:

1. Claims 4, 8-13, 17, and 18 do not comply with PCT Rule 6.4(a) because any dependent claim which refers to more than one other claims should refer to such claims as an alternative only.

Supplemental Box

In case the space in any of the preceding boxes is not sufficient.
Continuation of :

(Box No. V)

2.2. Claims 14-16

The subject matter of claim 14 of the present invention relates to a tunable match resonator for an antenna assembly, the tunable match resonator comprising: a tubular radiating element; a loading rod; a balun; and a dielectric load bushing.

Document D3 is regarded as the closest prior art to the subject matter of claim 14. However, None of D1-D3 disclose the balun and the dielectric loading bushing of claim 14. Accordingly, it would not have been obvious to a person skilled in the art to apply the knowledge of these documents individually or in combination in order to create the tunable match resonator of claim 14. Therefore, the subject matter of claim 14 is considered to be novel and to involve an inventive step under PCT Article 33(2) and (3).

Claims 15, 16 are dependent on claim 14 of the present application. Therefore, claims 15, 16 are considered to be novel and to involve an inventive step, because the subject matter of claim 14 is considered to be novel and to involve an inventive step under PCT Article 33(2) and (3).

2.3. Claims 19-22

The subject matter of claim 19 of the present invention relates to a multi-band array antenna assembly comprising: first, second, and third open-ended radiating tubes; a coaxial cable; a loading rod; a balun; and a dielectric load bushing.

Document D1 is regarded as the closest prior art to the subject matter of claim 19. However, None of D1-D3 disclose the balun and the dielectric loading bushing of claim 19. Accordingly, it would not have been obvious to a person skilled in the art to apply the knowledge of these documents individually or in combination in order to create the multi-band array antenna assembly of claim 19. Therefore, the subject matter of claim 19 is considered to be novel and to involve an inventive step under PCT Article 33(2) and (3).

Claims 20-22 are dependent on claim 19 of the present application. Therefore, claims 20-22 are considered to be novel and to involve an inventive step, because the subject matter of claim 19 is considered to be novel and to involve an inventive step under PCT Article 33(2) and (3).

2.4. Claims 23-25

The subject matter of claim 23 of the present invention relates to a method comprising providing a multi-band antenna assembly suitable for use with a base station subsystem, wherein the multi-band antenna assembly includes at least two radiating elements, a transmission line, and a tunable match resonator.

Document D1 is regarded as the closest prior art to the subject matter of claim 23. However, None of D1-D3 disclose the tunable match resonator of claim 23. Accordingly, it would not have been obvious to a person skilled in the art to apply the knowledge of these documents individually or in combination in order to create the method of claim 23. Therefore, the subject matter of claim 23 is considered to be novel and to involve an inventive step under PCT Article 33(2) and (3).

Claims 24, 25 are dependent on claim 23 of the present application. Therefore, claims 24, 25 are considered to be novel and to involve an inventive step, because the subject matter of claim 23 is considered to be novel and to involve an inventive step under PCT Article 33(2) and (3).

3. Industrial Applicability (PCT Article 33(4))

Claims 1-3, 14-16, 19-25 of the present application meet the criteria set out in PCT Article 33(4), because the subject matter of claims 1-3, 14-16, 19-25 is considered to be industrially applicable.

UNITED STATES PATENT AND TRADEMARK OFFICE

UNITED STATES DEPARTMENT OF COMMERCE
United States Patent and Trademark Office
Address: COMMISSIONER FOR PATENTS
P.O. Box 1450
Alexandria, Virginia 22313-1450
www.uspto.gov

APPLICATION NO.	FILING DATE	FIRST NAMED INVENTOR	ATTORNEY DOCKET NO.	CONFIRMATION NO.
12/412,231	03/26/2009	Imad M. Swais	9062E-000438/US	6636

28997 7590 02/24/2011
HARNESS, DICKEY, & PIERCE, P.L.C
7700 Bonhomme, Suite 400
ST. LOUIS, MO 63105

EXAMINER	
OWENS, DOUGLAS W	

ART UNIT	PAPER NUMBER
2821	

MAIL DATE	DELIVERY MODE
02/24/2011	PAPER

Please find below and/or attached an Office communication concerning this application or proceeding.

The time period for reply, if any, is set in the attached communication.

UNITED STATES PATENT AND TRADEMARK OFFICE

Commissioner for Patents
United States Patent and Trademark Office
P.O. Box 1450
Alexandria, VA 22313-1450
www.uspto.gov

HARNESS, DICKEY, & PIERCE, P.L.C
7700 Bonhomme, Suite 400
ST. LOUIS MO 63105

In re Application of
SWAIS et al.
Application No.: 12/412,231
Filed: 26 March 2009
Attorney Docket No.: 9062E-000438/US
For: MULTI-BAND ANTENNA ASSEMBLIES

: DECISION ON REQUEST TO
: PARTICIPATE IN THE PATENT
: PROSECUTION HIGHWAY
: PROGRAM AND PETITION
: TO MAKE SPECIAL UNDER
: 37 CFR 1.102(a)

This is a decision on the request to participate in the PCT Patent Prosecution Highway (PCT-PPH) pilot program and the petition under 37 CFR 1.102(a), filed 11 January 2011, to make the above-identified application special.

The request and petition are **GRANTED**.

Discussion

A grantable request to participate in the PCT-PPH pilot program and petition to make special require:

(1) The U.S. application must disclose an eligible relationship to one or more PCT applications where the ISA or IPEA are the JPO, EPO, KIPO, or USPTO;

(2) At least one claim in the PCT application has novelty, inventive step, and industrial applicability and must be free of any observations in Box VIII in the latest work product in the international stage or applicant must identify and explain why the claim(s) is/are not subject to the observation in Box VIII;

(3) Applicant must submit a copy of the claim(s) from the PCT application(s) that have novelty, inventive step, and industrial applicability along with an English translation thereof and a statement that the English translation is accurate, if the claims are not in the English language;

(4) All the claims in the U.S. application must sufficiently correspond or be amended to sufficiently correspond to the claim(s) that have novelty, inventive step, and industrial applicability in the PCT application(s);

(5) Examination of the U.S. application has not begun;

(6) Applicant must submit a copy of the latest international work product from the PCT application indicating that the claim(s) have novelty, inventive step, and industrial applicability along with an English translation thereof and a statement that the English translation is accurate

if the latest international work product is not in the English language;

(7) Applicant must submit an IDS listing the documents cited by the PCT examiner in the international work product along with copies of documents except U.S. patents or U.S. patent application publications.

The request to participate in the PCT-PPH pilot program and petition comply with the above requirements. Accordingly, the above-identified application has been accorded "special" status.

Telephone inquiries concerning this decision should be directed to Lee W. Young at 571-272-4549.

All other inquiries concerning the examination or status of the application is accessible in the PAIR system at http://www.uspto.gov/ebc.index.html.

This application will be forwarded to the examiner for action on the merits commensurate with this decision once this application's formality reviews have been completed.

Lee W. Young
TQAS Technology Center 2800 - Semiconductors,
Electrical & Optical Systems & Components

UNITED STATES PATENT AND TRADEMARK OFFICE

UNITED STATES DEPARTMENT OF COMMERCE
United States Patent and Trademark Office
Address: COMMISSIONER FOR PATENTS
P.O. Box 1450
Alexandria, Virginia 22313-1450
www.uspto.gov

APPLICATION NO.	FILING DATE	FIRST NAMED INVENTOR	ATTORNEY DOCKET NO.	CONFIRMATION NO.
12/412,237	03/26/2009	Jie Tang	13674-231	6648

7590 09/15/2010

Huawei/BHGL
P.O. Box 10395
Chicago, IL 60610

EXAMINER
HWANG, JOON H

ART UNIT	PAPER NUMBER
2447	

MAIL DATE	DELIVERY MODE
09/15/2010	PAPER

DECISION GRANTING PETITION UNDER 37 CFR 1.138(d)

The declaration of express abandonment is recognized

This is in response to the petition under 37 CFR 1.138(d), requesting for a refund of any previously paid search fee and excess claims fee in the above-identified application.

The petition is granted.

The express abandonment is recognized. Any previously paid search fee and excess claims fee are hereby refunded.

Telephone inquiries should be directed to the Office of Data Management at (571) 272-4200.

Nioni Farmer

Patent Publication Branch
Office of Data Management

Adjustment date: 09/15/2010 NFARMER
03/27/2009 INTERSW 03003366 042100 12412237
02 FC:1111 540.00 CR
04 FC:1201 220.00 CR

FORM PET651G (Rev. 08/07)

Doc Code: PPH.PCT.652
Document Description: Petition to make special under PCT-Patent Pros Hwy

PTO/SB/20PCT-FI (01-11)
Approved for use through 01/31/2012. OMB 0651-0058
U.S. Patent and Trademark Office; U. S. DEPARTMENT OF COMMERCE
Under the Paperwork Reduction Act of 1995, no persons are required to respond to a collection of information unless it displays a valid OMB control number.

REQUEST FOR PARTICIPATION IN THE PATENT COOPERATION TREATY - PATENT PROSECUTION HIGHWAY (PCT-PPH) PILOT PROGRAM BETWEEN THE NATIONAL BOARD OF PATENTS AND REGISTRATION OF FINLAND (NBPR) AND THE USPTO

Application No:	12/412,258	Filing date:	March 26, 2009
First Named Inventor:	Jacob Oshins		
Title of the Invention:	VIRTUAL NON-UNIFORM MEMORY ARCHITECTURE FOR VIRTUAL MACHINES		

THIS REQUEST FOR PARTICIPATION IN THE PCT-PPH PILOT PROGRAM ALONG WITH THE REQUIRED DOCUMENTS MUST BE SUBMITTED VIA EFS-WEB. INFORMATION REGARDING EFS-WEB IS AVAILABLE AT HTTP://WWW.USPTO.GOV/EBC/EFS_HELP.HTML

APPLICANT HEREBY REQUESTS PARTICIPATION IN THE PCT-PPH PROGRAM AND PETITIONS TO MAKE THE ABOVE-IDENTIFIED APPLICATION SPECIAL UNDER THE PCT-PPH PROGRAM.

The above-identified application is (1) a national stage entry of the corresponding PCT application, or (2) a national stage entry of another PCT application which claims priority to the corresponding PCT application, or (3) a national application that claims domestic/ foreign priority to the corresponding PCT application, or (4) a national application which forms the basis for the priority claim in the corresponding PCT application, or (5) a continuing application of a U.S. application that satisfies one of (1) to (4) above, or (6) a U.S. application that claims domestic benefit to a U.S. provisional application which forms the basis for the priority claim in the corresponding PCT application.

The corresponding PCT application number(s) is/are: PCT/US10/28038

The international filing date of the corresponding PCT application(s) is/are: March 19, 2010

I. List of Required Documents:

a. **A copy of the latest international work product (WO/ISA, WO/IPEA, or IPER) in the above–identified corresponding PCT application(s)**

☑ Is attached.

☐ Is not attached because the document is already in the U.S. application.

b. **A copy of all claims which were indicated as having novelty, inventive step and industrial applicability in the above-identified corresponding PCT application(s).**

☑ Is attached.

☐ Is not attached because the document is already in the U.S. application.

c. **English translations of the documents in a. and b. above are attached (if the documents are not in the English language). A statement that the English translation is accurate is attached for the document in b. above.**

This collection of information is required by 35 U.S.C. 119, 37 CFR 1.55, and 37 CFR 1.102(d). The information is required to obtain or retain a benefit by the public, which is to file (and by the USPTO to process) an application. Confidentiality is governed by 35 U.S.C. 122 and 37 CFR 1.11 and 1.14. This collection is estimated to take 2 hours to complete, including gathering, preparing, and submitting the completed application form to the USPTO. Time will vary depending upon the individual case. Any comments on the amount of time you require to complete this form and/or suggestions for reducing this burden should be sent to the Chief Information Officer, U.S. Patent and Trademark Office, U.S. Department of Commerce, P.O. Box 1450, Alexandria, VA 22313-1450. DO NOT SEND FEES OR COMPLETED FORMS TO THIS ADDRESS.

PTO/SB/20PCT-FI (01-11)
Approved for use through 01/31/2012. OMB 0651-0058
U.S.Patent and Trademark Office; U.S. DEPARTMENT OF COMMERCE
Under the Paperwork Reduction Act of 1995, no persons are required to respond to a collection of information unless it displays a valid OMB control number.

REQUEST FOR PARTICIPATION IN THE PCT-PPH PILOT PROGRAM BETWEEN THE NBPR AND THE USPTO

(continued)

Application No.:	12/412,258
First Named Inventor:	Jacob Oshins

d. **(1) An information disclosure statement listing the documents cited in the international work products (ISR, WO/ISA, WO/IPEA, IPER) of the corresponding PCT application.**

☐ Is attached

☑ Has already been filed in the above-identified U.S. application on April 14, 2011

(2) Copies of all documents (except) for U.S. patents or U.S. patent application publications)

☑ Are attached.

☐ Have already been filed in the above-identified U.S. application on _____

II. Claims Correspondence Table:

Claims in US Application	Patentable Claims in the corresponding PCT Application	Explanation regarding the correspondence
1-20	1-20	Claims are identical except for numerical references that refer to the drawings in the PCT application

III. All the claims in the US application sufficiently correspond to the patentable claims in the corresponding PCT application.

Signature /James R. Banowsky/	Date April 22, 2011
Name (Print/Typed) James R. Banowsky	Registration Number 37,773

Privacy Act Statement

The **Privacy Act of 1974 (P.L. 93-579)** requires that you be given certain information in connection with your submission of the attached form related to a patent application or patent. Accordingly, pursuant to the requirements of the Act, please be advised that: (1) the general authority for the collection of this information is 35 U.S.C. 2(b)(2); (2) furnishing of the information solicited is voluntary; and (3) the principal purpose for which the information is used by the U.S. Patent and Trademark Office is to process and/or examine your submission related to a patent application or patent. If you do not furnish the requested information, the U.S. Patent and Trademark Office may not be able to process and/or examine your submission, which may result in termination of proceedings or abandonment of the application or expiration of the patent.

The information provided by you in this form will be subject to the following routine uses:

1. The information on this form will be treated confidentially to the extent allowed under the Freedom of Information Act (5 U.S.C. 552) and the Privacy Act (5 U.S.C 552a). Records from this system of records may be disclosed to the Department of Justice to determine whether disclosure of these records is required by the Freedom of Information Act.
2. A record from this system of records may be disclosed, as a routine use, in the course of presenting evidence to a court, magistrate, or administrative tribunal, including disclosures to opposing counsel in the course of settlement negotiations.
3. A record in this system of records may be disclosed, as a routine use, to a Member of Congress submitting a request involving an individual, to whom the record pertains, when the individual has requested assistance from the Member with respect to the subject matter of the record.
4. A record in this system of records may be disclosed, as a routine use, to a contractor of the Agency having need for the information in order to perform a contract. Recipients of information shall be required to comply with the requirements of the Privacy Act of 1974, as amended, pursuant to 5 U.S.C. 552a(m).
5. A record related to an International Application filed under the Patent Cooperation Treaty in this system of records may be disclosed, as a routine use, to the International Bureau of the World Intellectual Property Organization, pursuant to the Patent Cooperation Treaty.
6. A record in this system of records may be disclosed, as a routine use, to another federal agency for purposes of National Security review (35 U.S.C. 181) and for review pursuant to the Atomic Energy Act (42 U.S.C. 218(c)).
7. A record from this system of records may be disclosed, as a routine use, to the Administrator, General Services, or his/her designee, during an inspection of records conducted by GSA as part of that agency's responsibility to recommend improvements in records management practices and programs, under authority of 44 U.S.C. 2904 and 2906. Such disclosure shall be made in accordance with the GSA regulations governing inspection of records for this purpose, and any other relevant (*i.e.*, GSA or Commerce) directive. Such disclosure shall not be used to make determinations about individuals.
8. A record from this system of records may be disclosed, as a routine use, to the public after either publication of the application pursuant to 35 U.S.C. 122(b) or issuance of a patent pursuant to 35 U.S.C. 151. Further, a record may be disclosed, subject to the limitations of 37 CFR 1.14, as a routine use, to the public if the record was filed in an application which became abandoned or in which the proceedings were terminated and which application is referenced by either a published application, an application open to public inspection or an issued patent.
9. A record from this system of records may be disclosed, as a routine use, to a Federal, State, or local law enforcement agency, if the USPTO becomes aware of a violation or potential violation of law or regulation.

PATENT

First Named Inventor: Jacob Oshins
Application No.: 12/412,258
Filed: March 26, 2009
Customer No.: 41505
Confirmation Number: 6698
Title: VIRTUAL NON-UNIFORM MEMORY ARCHITECTURE FOR VIRTUAL MACHINES

Attorney Docket No.: MVIR-0538/326569.01
Group Art Unit: 2195
Examiner: AN, MENG AI T

Commissioner for Patents
P.O. Box 1460
Alexandria, VA 22313-1450

Statement on Request for Participation in the PCT-Patent Prosecution Highway Pilot Program

Dear Sir:

Applicants state that the claims in the PCT application are identical to the claims in the US application. The only formatting difference is that the claims in the PCT application contain numerical references that refer to the drawings. For your convenience, however, a copy of the claims in the PCT application is also included.

Accordingly, applicants respectfully request the petition to participate in the PCT – Patent Prosecution Highway Pilot Program be granted. If you have any questions, please do not hesitate to call the Applicant's attorney at the telephone number listed below.

Respectfully submitted,

Date: April 22, 2011

By:/James R. Banowsky/
Atty: James R. Banowsky
Reg. No.: 37,773
Direct telephone: (425) 705-3539
Microsoft Corporation
One Microsoft Way
Redmond WA 98052-6399

CERTIFICATE OF MAILING OR TRANSMISSION
(Under 37 CFR § 1.8(a)) or ELECTRONIC FILING

I hereby certify that this correspondence is being electronically deposited with the USPTO via EFS-Web on the date shown below:

April 22, 2011
Date

/Eric Matt/
Eric Matt

What is Claimed:

1. A method, comprising:

receiving, by a management system (502), information indicative of the physical topology of computer systems (504-510) in a datacenter (500);

receiving a request to instantiate a virtual machine (240), the request indicating a characteristic for the virtual machine;

determining, based on the physical topology of the computer systems (504-510) and the characteristic for the virtual machine (240), a number of virtual NUMA nodes for the virtual machine (240); and

sending a request to a computer system (504) in the datacenter (500), the request directing the computer system (504) to instantiate the virtual machine (240) having the determined number of virtual NUMA nodes.

2. The method of claim 1, further comprising:

receiving a signal indicating that the computer system (504-510) is stressed; and

sending a signal to the computer system (504), the signal directing the computer system (504) to send the virtual machine (240) to a second computer system (506, 508, or 510).

3. The method of claim 1, further comprising:

sending a signal to the computer system (504), the signal directing the computer system (504) to move the virtual machine from a first NUMA node (704) to a second NUMA node (702).

4. The method of claim 1, wherein determining the number of virtual NUMA nodes for the virtual machine (240) further comprises:

determining the highest NUMA ratio in the datacenter (500).

5. A computer system, comprising:

circuitry for receiving a request to instantiate a virtual machine (240);

circuitry for generating the virtual machine (240), the virtual machine (240) having a topology that includes a plurality of virtual NUMA nodes (606, 608), each virtual NUMA node of the plurality including at least one virtual processor (230A-D) and a range of guest physical addresses (614, 614), wherein the topology of the virtual machine (240) is generated independently from the physical topology of the computer system (700); and

circuitry for instantiating the virtual machine (240), the virtual machine (240) including the virtual NUMA nodes (606, 608).

6. The computer system of claim 5, further comprising:

circuitry for saving the virtual machine (240).

7. The computer system of claim 5, further comprising:

circuitry for sending the virtual machine (240) to a remote computer system (506).

8. The computer system of claim 5, further comprising:

circuitry for migrating the virtual machine (240) to one or more other NUMA nodes (704).

9. The computer system of claim 5, further comprising:

circuitry for assigning the virtual machine (240) to a first NUMA node (702); and

circuitry for migrating the virtual machine (240)to a second NUMA node (704) of the plurality of NUMA nodes.

10. The computer system of claim 5, further comprising:

circuitry for generating NUMA ratios for the plurality of virtual NUMA nodes (606-608); and

circuitry for reporting the NUMA ratios for the plurality of virtual NUMA nodes (606-608) to a guest operating system (220).

11. The computer system of claim 5, further comprising:

circuitry for receiving a request from a guest operating system (220) to access a first guest physical address from a first virtual NUMA node (614) and a second guest physical address from a second virtual NUMA node (616);

circuitry for increasing the access time required to access the second guest physical address (616); and

circuitry for reporting the increased access time required to access the first and second guest physical addresses (616) to the guest operating system (220).

12. The computer system of claim 5, further comprising:

circuitry for allocating system memory addresses to the virtual machine (240), the system memory addresses (622-624) obtained from a single NUMA node (702); and

circuitry for assigning a processor (212A) to execute the virtual processor (230A), the processor (212A) obtained from the NUMA node (702).

13. The computer system of claim 5, wherein the circuitry for instantiating the virtual machine (240) further comprises:

circuitry for mapping a first virtual NUMA node (606) of the plurality to a first NUMA node (702) of the computer system (700); and

circuitry for mapping a second virtual NUMA node (608) of the plurality to the first NUMA node (702) of the computer system (700).

14. The computer system of claim 5, wherein the circuitry for instantiating the virtual machine (240) further comprises:

circuitry for mapping a first virtual NUMA node of the plurality to a first NUMA node of the computer system; and

circuitry for mapping a second virtual NUMA node of the plurality to a second NUMA node of the computer system.

15. The computer system of claim 10, wherein the NUMA ratios for the virtual NUMA (606-608) nodes are greater than a median NUMA ratio detected in a datacenter (500), the datacenter (500) including a plurality of computer systems (504-510).

16. A computer readable storage medium including processor executable instructions, the computer readable storage medium comprising:

instructions for generating a plurality of virtual NUMA nodes (606-608) for a virtual machine (240), each virtual NUMA node (606-608) of the plurality including at least one virtual processor (212E) and at least one memory block of guest physical addresses, the plurality of virtual NUMA nodes being generating independently from a physical topology of any computer system; and

instructions for instantiating the virtual machine (240) on a computer system (700), the virtual machine (240) including the plurality of virtual NUMA nodes (606-608).

17. The computer readable storage medium of claim 17, further comprising:

instructions for assigning a first virtual NUMA node (606) and a second virtual NUMA node (608) to execute on a NUMA node (702) of the computer system (700).

18. The computer readable storage medium of claim 17, further comprising:

instructions for assigning a first virtual NUMA node (606) of the plurality to execute on a first NUMA node (704) of the computer system (700); and

instructions for assigning a second virtual NUMA node (608) of the plurality to execute on a second NUMA node (608) of the computer system (700).

19. The computer readable storage medium of claim 17, further comprising:

instructions for generating NUMA ratios for the plurality of virtual NUMA nodes (606-608); and

instructions for reporting the NUMA ratios to a guest operating system (220).

20. The computer readable storage medium of claim 17, further comprising:

instructions for determining that a NUMA node (702) associated with the virtual machine (240) is overcommitted; and

instructions for migrating the virtual machine (240) to one or more other NUMA nodes (704).

5

UNITED STATES PATENT AND TRADEMARK OFFICE

UNITED STATES DEPARTMENT OF COMMERCE
United States Patent and Trademark Office
Address: COMMISSIONER FOR PATENTS
P.O. Box 1450
Alexandria, Virginia 22313-1450
www.uspto.gov

APPLICATION NO.	FILING DATE	FIRST NAMED INVENTOR	ATTORNEY DOCKET NO.	CONFIRMATION NO.
12/412,258	03/26/2009	Jacob Oshins	MVIR-0538/326569.01	6698

41505 7590 06/13/2011

WOODCOCK WASHBURN LLP (MICROSOFT CORPORATION)
CIRA CENTRE, 12TH FLOOR
2929 ARCH STREET
PHILADELPHIA, PA 19104-2891

EXAMINER	
AN, MENG AI T	

ART UNIT	PAPER NUMBER
2195	

NOTIFICATION DATE	DELIVERY MODE
06/13/2011	ELECTRONIC

Please find below and/or attached an Office communication concerning this application or proceeding.

The time period for reply, if any, is set in the attached communication.

Notice of the Office communication was sent electronically on above-indicated "Notification Date" to the following e-mail address(es):

eofficemonitor@woodcock.com

UNITED STATES PATENT AND TRADEMARK OFFICE

Commissioner for Patents
United States Patent and Trademark Office
P.O. Box 1450
Alexandria, VA 22313-1450
www.uspto.gov

WOODCOCK WASHBURN LLP (MICROSOFT CORPORATION)
CIRA CENTRE, 12TH FLOOR
2929 ARCH STREET
PHILADELPHIA PA 19104-2891

In re Application of: Jacob OSHINS
Application No. 12/412,258
Atty Docket #: MVIR-0538/326569.01
Filed: March 26, 2009
For: VIRTUAL NON-UNIFORM MEMORY ARCHITECTURE FOR VIRTUAL MACHINES

DECISION ON REQUEST TO PARTICIPATE IN PATENT PROSECUTION HIGHWAY PROGRAM AND PETITION TO MAKE SPECIAL UNDER 37 CFR 1.102(a)

This is a decision on the request to participate in the PCT-Patent Prosecution Highway (**PCT-PPH**) pilot program and the petition under 37 CFR 1.102(a), filed April 22, 2011 to make the above- identified application special.

The petition is **GRANTED.**

A grantable request to participate in the PPH program and petition to make special require:

(1) The U.S. application is
(a) a national stage entry of the corresponding PCT application

Or

(b) a national application which forms the basis for the priority claim in the corresponding PCT application

Or

(c) *a* national stage entry of another PCT application (which can be filed in any competent receiving office) which claims priority to the corresponding PCT application

Or

(d) a national application claiming foreign domestic priority to the corresponding PCT application.
Applications subject to a secrecy order (35U.S.C.181) are excluded and not subject to participation in the PCT-PPH pilot program.

Or

(e) a continuing application (continuation, divisional, or continuation-in-part) of the U.S. application which satisfies one of the above (a) to (d) scenarios.

(2) The latest work product in the international phase of the PCT application corresponding to the U.S. application, namely the WO/ISA, or the WO/IPEA, or the IPER, indicates at least one claim in the PCT application has novelty, inventive step and industrial applicability. In case any observation is described in Box VIII of the WO/ISA, or the WO/IPEA, or the IPER which forms the basis for the PCT-PPH request, applicant must identify and explain why the claim(s) is/are not subject to any observation described in Box VIII irrespective of whether an amendment is submitted to correct the observation described in Box VIII. The U.S. application will not be eligible to participate in the PCT-PPH pilot program if applicant does not identify and explain why the claim(s) is/are not subject to the observation described in Box VIII.

Applicant may not file a request to participate in the PCT-PPH pilot program on the basis of an International Search Report (ISR) only.

(3) Applicant must:

a. Ensure all the claims in the U.S. application sufficiently correspond or be amended to sufficiently correspond to one or more of those claims indicated as having novelty, inventive step and industrial applicability and free of any observation described in Box VIII in the latest work product of the corresponding PCT application and

b. Submit a claims correspondence table in English;

The USPTO will accept claims written in dependent form in the U.S. application which are narrower in scope than the claims indicated as having novelty, inventive step and industrial applicability and free of any observation described in Box VIII in the latest work product of the corresponding PCT application.

(4) Substantive Examination of the U.S. application has not begun;

(5) Applicant must submit a copy of:

a. the latest international work product, WO/ISA, or WO/IPEA or PER, which indicated that the claim(s) has/have novelty, inventive step and industrial applicability along with an English translation thereof if the copy of the latest international work product is not in the English language, unless the U.S. application and the corresponding PCT application satisfy the relationship noted in (l)(a) above.

(6) Applicant must submit a copy of:

a. the claims from the corresponding PCT application which were indicated as having novelty, inventive step and industrial applicability in the latest work product of the PCT application,
b. an English translation of the claims and
c. a statement that the English translation is accurate.

If the claims in the U.S. application are identical to the claims from the corresponding PCT application, and are in the English language, applicant may just indicate such in the PCT-PPH request and it will not be necessary for applicant to submit a copy of the claims from the corresponding PCT application.

(7) Applicant must submit:

a. An IDS listing the documents cited in the work products in the international phase of the PCT application corresponding to the U.S. application, namely the WO/ISA, or the WO/IPEA, or the IPER,(unless already submitted in this application)
b. Copies of the documents except U.S. patents or U.S. patent application publications (unless already submitted in this application);

The request to participate in the PPH pilot program and petition are found to comply with the above requirements. Accordingly, the above-identified application has been accorded "special" status.

Telephone inquiries concerning this decision should be directed to Mano Padmanabhan at 571-272-4210.

All other inquiries concerning the examination or status of the application is accessible in the PAIR system at http://www.uspto.gov/ebc/index.html.

The application is being forwarded to the examiner for action on the merits commensurate with this decision.

/Mano Padmanabhan/

_____

Mano Padmanabhan
Quality Assurance Specialist, Technology Center 2100, Workgroup 2180
571-272-4210

Doc Code: PPH.PCT.652
Document Description: Petition to make special under PCT-Patent Pros Hwy

PTO/SB/20PCT-FI (01-11)
Approved for use through 01/31/2012. OMB 0651-0058
U.S. Patent and Trademark Office; U. S. DEPARTMENT OF COMMERCE
Under the Paperwork Reduction Act of 1995, no persons are required to respond to a collection of information unless it displays a valid OMB control number.

REQUEST FOR PARTICIPATION IN THE PATENT COOPERATION TREATY - PATENT PROSECUTION HIGHWAY (PCT-PPH) PILOT PROGRAM BETWEEN THE NATIONAL BOARD OF PATENTS AND REGISTRATION OF FINLAND (NBPR) AND THE USPTO

Application No:	12/412,272	Filing date:	March 26, 2009
First Named Inventor:	Jacob Oshins		
Title of the Invention:	VIRTUAL NON-UNIFORM MEMORY ARCHITECTURE FOR VIRTUAL MACHINES		

THIS REQUEST FOR PARTICIPATION IN THE PCT-PPH PILOT PROGRAM ALONG WITH THE REQUIRED DOCUMENTS MUST BE SUBMITTED VIA EFS-WEB. INFORMATION REGARDING EFS-WEB IS AVAILABLE AT HTTP://WWW.USPTO.GOV/EBC/EFS_HELP.HTML

APPLICANT HEREBY REQUESTS PARTICIPATION IN THE PCT-PPH PROGRAM AND PETITIONS TO MAKE THE ABOVE-IDENTIFIED APPLICATION SPECIAL UNDER THE PCT-PPH PROGRAM.

The above-identified application is (1) a national stage entry of the corresponding PCT application, or (2) a national stage entry of another PCT application which claims priority to the corresponding PCT application, or (3) a national application that claims domestic/ foreign priority to the corresponding PCT application, or (4) a national application which forms the basis for the priority claim in the corresponding PCT application, or (5) a continuing application of a U.S. application that satisfies one of (1) to (4) above, or (6) a U.S. application that claims domestic benefit to a U.S. provisional application which forms the basis for the priority claim in the corresponding PCT application.

The corresponding PCT application number(s) is/are: PCT/US10/28034

The international filing date of the corresponding PCT application(s) is/are: March 19, 2010

I. List of Required Documents:

a. **A copy of the latest international work product (WO/ISA, WO/IPEA, or IPER) in the above–identified corresponding PCT application(s)**

☑ Is attached.

☐ Is not attached because the document is already in the U.S. application.

b. **A copy of all claims which were indicated as having novelty, inventive step and industrial applicability in the above-identified corresponding PCT application(s).**

☑ Is attached.

☐ Is not attached because the document is already in the U.S. application.

c. **English translations of the documents in a. and b. above are attached (if the documents are not in the English language). A statement that the English translation is accurate is attached for the document in b. above.**

This collection of information is required by 35 U.S.C. 119, 37 CFR 1.55, and 37 CFR 1.102(d). The information is required to obtain or retain a benefit by the public, which is to file (and by the USPTO to process) an application. Confidentiality is governed by 35 U.S.C. 122 and 37 CFR 1.11 and 1.14. This collection is estimated to take 2 hours to complete, including gathering, preparing, and submitting the completed application form to the USPTO. Time will vary depending upon the individual case. Any comments on the amount of time you require to complete this form and/or suggestions for reducing this burden should be sent to the Chief Information Officer, U.S. Patent and Trademark Office, U.S. Department of Commerce, P.O. Box 1450, Alexandria, VA 22313-1450. DO NOT SEND FEES OR COMPLETED FORMS TO THIS ADDRESS.

PTO/SB/20PCT-FI (01-11)
Approved for use through 01/31/2012. OMB 0651-0058
U.S.Patent and Trademark Office; U.S. DEPARTMENT OF COMMERCE
Under the Paperwork Reduction Act of 1995, no persons are required to respond to a collection of information unless it displays a valid OMB control number.

REQUEST FOR PARTICIPATION IN THE PCT-PPH PILOT PROGRAM BETWEEN THE NBPR AND THE USPTO

(continued)

Application No.:	12/412,272
First Named Inventor:	Jacob Oshins

d. **(1) An information disclosure statement listing the documents cited in the international work products (ISR, WO/ISA, WO/IPEA, IPER) of the corresponding PCT application.**

☐ Is attached

☑ Has already been filed in the above-identified U.S. application on April 14, 2011

(2) Copies of all documents (except) for U.S. patents or U.S. patent application publications)

☑ Are attached.

☐ Have already been filed in the above-identified U.S. application on _____

II. Claims Correspondence Table:

Claims in US Application	Patentable Claims in the corresponding PCT Application	Explanation regarding the correspondence
1-20	1-20	Claims are identical except for numerical references that refer to the drawings in the PCT application

III. All the claims in the US application sufficiently correspond to the patentable claims in the corresponding PCT application.

Signature /James R. Banowsky/	Date April 21, 2011
Name (Print/Typed) James R. Banowsky	Registration Number 37,773

Privacy Act Statement

The **Privacy Act of 1974 (P.L. 93-579)** requires that you be given certain information in connection with your submission of the attached form related to a patent application or patent. Accordingly, pursuant to the requirements of the Act, please be advised that: (1) the general authority for the collection of this information is 35 U.S.C. 2(b)(2); (2) furnishing of the information solicited is voluntary; and (3) the principal purpose for which the information is used by the U.S. Patent and Trademark Office is to process and/or examine your submission related to a patent application or patent. If you do not furnish the requested information, the U.S. Patent and Trademark Office may not be able to process and/or examine your submission, which may result in termination of proceedings or abandonment of the application or expiration of the patent.

The information provided by you in this form will be subject to the following routine uses:

1. The information on this form will be treated confidentially to the extent allowed under the Freedom of Information Act (5 U.S.C. 552) and the Privacy Act (5 U.S.C 552a). Records from this system of records may be disclosed to the Department of Justice to determine whether disclosure of these records is required by the Freedom of Information Act.
2. A record from this system of records may be disclosed, as a routine use, in the course of presenting evidence to a court, magistrate, or administrative tribunal, including disclosures to opposing counsel in the course of settlement negotiations.
3. A record in this system of records may be disclosed, as a routine use, to a Member of Congress submitting a request involving an individual, to whom the record pertains, when the individual has requested assistance from the Member with respect to the subject matter of the record.
4. A record in this system of records may be disclosed, as a routine use, to a contractor of the Agency having need for the information in order to perform a contract. Recipients of information shall be required to comply with the requirements of the Privacy Act of 1974, as amended, pursuant to 5 U.S.C. 552a(m).
5. A record related to an International Application filed under the Patent Cooperation Treaty in this system of records may be disclosed, as a routine use, to the International Bureau of the World Intellectual Property Organization, pursuant to the Patent Cooperation Treaty.
6. A record in this system of records may be disclosed, as a routine use, to another federal agency for purposes of National Security review (35 U.S.C. 181) and for review pursuant to the Atomic Energy Act (42 U.S.C. 218(c)).
7. A record from this system of records may be disclosed, as a routine use, to the Administrator, General Services, or his/her designee, during an inspection of records conducted by GSA as part of that agency's responsibility to recommend improvements in records management practices and programs, under authority of 44 U.S.C. 2904 and 2906. Such disclosure shall be made in accordance with the GSA regulations governing inspection of records for this purpose, and any other relevant (*i.e.*, GSA or Commerce) directive. Such disclosure shall not be used to make determinations about individuals.
8. A record from this system of records may be disclosed, as a routine use, to the public after either publication of the application pursuant to 35 U.S.C. 122(b) or issuance of a patent pursuant to 35 U.S.C. 151. Further, a record may be disclosed, subject to the limitations of 37 CFR 1.14, as a routine use, to the public if the record was filed in an application which became abandoned or in which the proceedings were terminated and which application is referenced by either a published application, an application open to public inspection or an issued patent.
9. A record from this system of records may be disclosed, as a routine use, to a Federal, State, or local law enforcement agency, if the USPTO becomes aware of a violation or potential violation of law or regulation.

UNITED STATES PATENT AND TRADEMARK OFFICE

UNITED STATES DEPARTMENT OF COMMERCE
United States Patent and Trademark Office
Address: COMMISSIONER FOR PATENTS
P.O. Box 1450
Alexandria, Virginia 22313-1450
www.uspto.gov

APPLICATION NO.	FILING DATE	FIRST NAMED INVENTOR	ATTORNEY DOCKET NO.	CONFIRMATION NO.
12/412,272	03/26/2009	Jacob Oshins	MVIR-0540/ 326269.01	6722

41505 7590 06/13/2011

WOODCOCK WASHBURN LLP (MICROSOFT CORPORATION)
CIRA CENTRE, 12TH FLOOR
2929 ARCH STREET
PHILADELPHIA, PA 19104-2891

EXAMINER	
CHAN, EDDIE P	
ART UNIT	**PAPER NUMBER**
2183	

NOTIFICATION DATE	DELIVERY MODE
06/13/2011	ELECTRONIC

Please find below and/or attached an Office communication concerning this application or proceeding.

The time period for reply, if any, is set in the attached communication.

Notice of the Office communication was sent electronically on above-indicated "Notification Date" to the following e-mail address(es):

eofficemonitor@woodcock.com

UNITED STATES PATENT AND TRADEMARK OFFICE

Commissioner for Patents
United States Patent and Trademark Office
P.O. Box 1450
Alexandria, VA 22313-1450
www.uspto.gov

WOODCOCK WASHBURN LLP (MICROSOFT CORPORATION)
CIRA CENTRE, 12TH FLOOR
2929 ARCH STREET
PHILADELPHIA PA 19104-2891

In re Application of: Jacob OSHINS
Application No. 12/412,272
Atty Docket #: MVIR-0540/ 326269.01
Filed: March 26, 2009
For: VIRTUAL NON-UNIFORM MEMORY ARCHITECTURE FOR VIRTUAL MACHINES

DECISION ON REQUEST TO PARTICIPATE IN PATENT PROSECUTION HIGHWAY PROGRAM AND PETITION TO MAKE SPECIAL UNDER 37 CFR 1.102(a)

This is a decision on the request to participate in the PCT-Patent Prosecution Highway **(PCT-PPH)** pilot program and the petition under 37 CFR 1.102(a), filed April 21, 2011 to make the above- identified application special.

The petition is **GRANTED.**

A grantable request to participate in the PPH program and petition to make special require:

(1) The U.S. application is
(a) a national stage entry of the corresponding PCT application

Or

(b) a national application which forms the basis for the priority claim in the corresponding PCT application

Or

(c) *a* national stage entry of another PCT application (which can be filed in any competent receiving office) which claims priority to the corresponding PCT application

Or

(d) a national application claiming foreign domestic priority to the corresponding PCT application.
Applications subject to a secrecy order (35U.S.C.181) are excluded and not subject to participation in the PCT-PPH pilot program.

Or

(e) a continuing application (continuation, divisional, or continuation-in-part) of the U.S. application which satisfies one of the above (a) to (d) scenarios.

(2) The latest work product in the international phase of the PCT application corresponding to the U.S. application, namely the WO/ISA, or the WO/IPEA, or the IPER, indicates at least one claim in the PCT application has novelty, inventive step and industrial applicability. In case any observation is described in Box VIII of the WO/ISA, or the WO/IPEA, or the IPER which forms the basis for the PCT-PPH request, applicant must identify and explain why the claim(s) is/are not subject to any observation described in Box VIII irrespective of whether an amendment is submitted to correct the observation described in Box VIII. The U.S. application will not be eligible to participate in the PCT-PPH pilot program if applicant does not identify and explain why the claim(s) is/are not subject to the observation described in Box VIII.

Applicant may not file a request to participate in the PCT-PPH pilot program on the basis of an International Search Report (ISR) only.

(3) Applicant must:

a. Ensure all the claims in the U.S. application sufficiently correspond or be amended to sufficiently correspond to one or more of those claims indicated as having novelty, inventive step and industrial applicability and free of any observation described in Box VIII in the latest work product of the corresponding PCT application and

b. Submit a claims correspondence table in English;

The USPTO will accept claims written in dependent form in the U.S. application which are narrower in scope than the claims indicated as having novelty, inventive step and industrial applicability and free of any observation described in Box VIII in the latest work product of the corresponding PCT application.

(4) Substantive Examination of the U.S. application has not begun;

(5) Applicant must submit a copy of:

a. the latest international work product, WO/ISA, or WO/IPEA or PER, which indicated that the claim(s) has/have novelty, inventive step and industrial applicability along with an English translation thereof if the copy of the latest international work product is not in the English language, unless the U.S. application and the corresponding PCT application satisfy the relationship noted in (1)(a) above.

(6) Applicant must submit a copy of:

a. the claims from the corresponding PCT application which were indicated as having novelty, inventive step and industrial applicability in the latest work product of the PCT application,
b. an English translation of the claims and
c. a statement that the English translation is accurate.

If the claims in the U.S. application are identical to the claims from the corresponding PCT application, and are in the English language, applicant may just indicate such in the PCT-PPH request and it will not be necessary for applicant to submit a copy of the claims from the corresponding PCT application.

(7) Applicant must submit:

a. An IDS listing the documents cited in the work products in the international phase of the PCT application corresponding to the U.S. application, namely the WO/ISA, or the WO/IPEA, or the IPER,(unless already submitted in this application)
b. Copies of the documents except U.S. patents or U.S. patent application publications (unless already submitted in this application);

The request to participate in the PPH pilot program and petition are found to comply with the above requirements. Accordingly, the above-identified application has been accorded "special" status.

Telephone inquiries concerning this decision should be directed to Mano Padmanabhan at 571-272-4210.

All other inquiries concerning the examination or status of the application is accessible in the PAIR system at http://www.uspto.gov/ebc/index.html.

The application is being forwarded to the examiner for action on the merits commensurate with this decision.

/Mano Padmanabhan/

_____

Mano Padmanabhan
Quality Assurance Specialist, Technology Center 2100, Workgroup 2180
571-272-4210

UNITED STATES PATENT AND TRADEMARK OFFICE

Commissioner for Patents
United States Patent and Trademark Office
P.O. Box 1450
Alexandria, VA 22313-1450
www.uspto.gov

HONEYWELL/FOX ROTHSCHILD
Patent Services
101 Columbia Road
Morristown NJ 07962

MAILED
OCT 20 2011
OFFICE OF PETITIONS

In re Application of :
Rajiv R. Singh et al. :
Application No. 12/412,342 : DECISION ON PETITION
Filed: March 26, 2009 :
Attorney Docket No. MIM201 :
H0003965DIV1B - 4510

This is a decision on the petition under the unintentional provisions of 37 CFR 1.137(b), filed October 10, 2011, to revive the above-identified application.

The petition is **GRANTED**.

The application became abandoned for failure to submit formal drawings in a timely manner in reply to the Notice of Allowability, mailed April 1, 2011, which set a period for reply of three (3) months. Accordingly, this application became abandoned on July 2, 2011. A Notice of Abandonment was mailed on October 5, 2011.

The petition satisfies the requirements of 37 CFR 1.137(b) in that petitioner has supplied (1) the reply in the form of an application data sheet, (2) the petition fee of $1,860, (3) a proper statement of unintentional delay. Accordingly, the application data sheet is accepted as being unintentionally delayed.

The application file does not indicate a change of address has been filed in this case, although the address given on the petition differs from the address of record. A change of address should be filed in this case in accordance with MPEP 601.03. A courtesy copy of this decision is being mailed to the address noted on the petition. However, until otherwise instructed, all future correspondence regarding this application will be mailed solely to the address of record.

Telephone inquiries concerning this decision should be directed to Kimberly Inabinet at (571) 272-4618.

This application is being referred to the Office of Data Management for further processing into a patent.

/Kimberly A. Inabinet/

Kimberly A. Inabinet
Petitions Examiner
Office of Petitions

cc: Joseph F. Posillico
Fox Rothschild, LLP
2000 Market Street
Philadelphia, PA 19102

UNITED STATES PATENT AND TRADEMARK OFFICE

Commissioner for Patents
United States Patent and Trademark Office
P.O. Box 1450
Alexandria, VA 22313-1450
www.uspto.gov

HONEYWELL/FOX ROTHSCHILD
Patent Services
101 Columbia Road
Morristown NJ 07962

MAILED
NOV 23 2011
OFFICE OF PETITIONS

In re Application of :
Rajiv R. Singh et al. :
Application No. 12/412,342 : CORRECTED DECISION ON
Filed: March 26, 2009 : PETITION
Attorney Docket No. MIM201 :
H0003965DIV1B - 4510

This is a corrected decision on the petition under the unintentional provisions of 37 CFR 1.137(b), filed October 10, 2011, to revive the above-identified application.

The petition is **GRANTED**.

The application became abandoned for failure to submit a reply in a timely manner to the Notice of Allowability, mailed April 1, 2011, which set a period for reply of three (3) months. Accordingly, this application became abandoned on July 2, 2011. A Notice of Abandonment was mailed on October 5, 2011.

The petition satisfies the requirements of 37 CFR 1.137(b) in that petitioner has supplied (1) the reply in the form of an application data sheet, (2) the petition fee of $1,860, (3) a proper statement of unintentional delay. Accordingly, the application data sheet is accepted as being unintentionally delayed.

The application file does not indicate a change of address has been filed in this case, although the address given on the petition differs from the address of record. A change of address should be filed in this case in accordance with MPEP 601.03. A courtesy copy of this decision is being mailed to the address noted on the petition. However, until otherwise instructed, all future correspondence regarding this application will be mailed solely to the address of record.

Telephone inquiries concerning this decision should be directed to Kimberly Inabinet at (571) 272-4618.

This application is being referred to the Office of Data Management for further processing into a patent.

/Kimberly A. Inabinet/

Kimberly A. Inabinet
Petitions Examiner
Office of Petitions

cc: Joseph F. Posillico
Fox Rothschild, LLP
2000 Market Street
Philadelphia, PA 19102

UNITED STATES PATENT AND TRADEMARK OFFICE

Commissioner for Patents
United States Patent and Trademark Office
P.O. Box 1450
Alexandria, VA 22313-1450
www.uspto.gov

FELLERS SNIDER BLANKENSHIP
BAILEY & TIPPENS
THE KENNEDY BUILDING
321 SOUTH BOSTON SUITE 800
TULSA OK 74103-3318

MAILED

AUG 30 2010

OFFICE OF PETITIONS

In re Application of	:	
William L. JOHNSON, SR.	:	CORRECTED
Application No. 12/412,357	:	DECISION ON PETITION
Filed: March 26, 2009	:	
Attorney Docket No. 62038/08-101	:	

This is a decision on the renewed petition under 37 CFR 1.53(e) filed November 25, 2009, to accord the original filing date.

Petitioner asserts that no drawings are necessary for the filing of the subject provisional application. A review of the Office records indicates that drawings are not needed.

Accordingly, this application is entitled to a filing date of March 26, 2009, and has been so accorded.

In view of the above, the petition is **GRANTED**.

This application file is being referred to the Office of Patent Application Processing

Telephone inquiries concerning this decision should be directed to Michelle R. Eason at (571) 272- 4231.

Thurman K. Page
Petitions Examiner
Office of Petitions

UNITED STATES PATENT AND TRADEMARK OFFICE

UNITED STATES DEPARTMENT OF COMMERCE
United States Patent and Trademark Office
Address: COMMISSIONER FOR PATENTS
P.O. Box 1450
Alexandria, Virginia 22313-1450
www.uspto.gov

APPLICATION NO.	FILING DATE	FIRST NAMED INVENTOR	ATTORNEY DOCKET NO.	CONFIRMATION NO.
12/412,454	03/27/2009	Mikihiro Hiramine	RYM-2635-763	7074

23117 7590 11/09/2011

NIXON & VANDERHYE, PC
901 NORTH GLEBE ROAD, 11TH FLOOR
ARLINGTON, VA 22203

EXAMINER	
IP, SHIK LUEN PAUL	
ART UNIT	**PAPER NUMBER**
2837	

MAIL DATE	DELIVERY MODE
11/09/2011	PAPER

Please find below and/or attached an Office communication concerning this application or proceeding.

The time period for reply, if any, is set in the attached communication.

UNITED STATES PATENT AND TRADEMARK OFFICE

Commissioner for Patents
United States Patent and Trademark Office
P.O. Box 1450
Alexandria, VA 22313-1450
www.uspto.gov

NIXON & VANDERHYE, PC
901 NORTH GLEBE ROAD, 11TH
FLOOR
ARLINGTON VA 22203

In re Application of	**: DECISION ON REQUEST TO**
Mikihiro HIRAMINE	**: PARTICIPATE IN THE PATENT**
Application No.: 12/412454	**: PROSECUTION HIGHWAY**
Filed: 27 March 2009	**: PROGRAM AND PETITION**
Attorney Docket No.: RYM-2635-763	**: TO MAKE SPECIAL UNDER**
For: MOTOR CONTROL DEVICE	**: 37 CFR 1.102(a)**

This is a decision on the request to participate in the Patent Prosecution Highway (PPH) program and the petition under 37 CFR 1.102(a), filed 29 July 2011, to make the above-identified application special.

The request and petition are **DISMISSED** as moot as the application has been allowed.

Telephone inquiries concerning this decision should be directed to Colleen Dunn at 571-272-1170.

All other inquiries concerning the examination or status of the application is accessible in the PAIR system at http://www.uspto.gov/ebc/index.html.

/Colleen Dunn/

Colleen Dunn
Quality Assurance Specialist
Technology Center 2800

UNITED STATES PATENT AND TRADEMARK OFFICE

UNITED STATES DEPARTMENT OF COMMERCE
United States Patent and Trademark Office
Address: COMMISSIONER FOR PATENTS
P.O. Box 1450
Alexandria, Virginia 22313-1450
www.uspto.gov

APPLICATION NO.	FILING DATE	FIRST NAMED INVENTOR	ATTORNEY DOCKET NO.	CONFIRMATION NO.
12/412,536	03/27/2009	Norihiro Arai	09212/LH	7245

1933 7590 04/13/2011

HOLTZ, HOLTZ, GOODMAN & CHICK PC
220 Fifth Avenue
16TH Floor
NEW YORK, NY 10001-7708

EXAMINER	
WONG, TINA MEI SENG	
ART UNIT	PAPER NUMBER
2874	

MAIL DATE	DELIVERY MODE
04/13/2011	PAPER

Please find below and/or attached an Office communication concerning this application or proceeding.

The time period for reply, if any, is set in the attached communication.

UNITED STATES PATENT AND TRADEMARK OFFICE

Commissioner for Patents
United States Patent and Trademark Office
P.O. Box 1450
Alexandria, VA 22313-1450
www.uspto.gov

HOLTZ, HOLTZ, GOODMAN & CHICK PC
220 Fifth Avenue
16TH Floor
NEW YORK NY 10001-7708

In re Application of
ARAI et al.
Application No.: 12/412,536
Filed: 27 March 2009
Attorney Docket No.: 09212/LH
For: METHOD OF MANUFACTURING LIQUID CRYSTAL DISPLAY DEVICE

: DECISION ON REQUEST TO
: PARTICIPATE IN THE PATENT
: PROSECUTION HIGHWAY
: PROGRAM AND PETITION
: TO MAKE SPECIAL UNDER
: 37 CFR 1.102(a)

This is a decision on the request to participate in the Patent Prosecution Highway (PPH) program and the petition under 37 CFR 1.102(a), filed 16 March 2011, to make the above-identified application special.

The request and petition are GRANTED.

Discussion

A grantable request to participate in the PPH pilot program and petition to make special require:

1. The U.S. application is

    a. a Paris Convention application which either
        i. validly claims priority under 35 U.S.C. 119(a) and 37 CFR 1.55 to one or more applications filed in the JPO, or
        ii. validly claims priority to a PCT application that contains no priority claims, or
    b. a national stage application under the PCT (an application which entered the national stage in the U.S. from a PCT international application after compliance with 35 U.S.C. 371), which PCT application
        i. validly claims priority to an application filed in the JPO, or
        ii. validly claims priority to a PCT application that contains no priority claims, or
        iii. contains no priority claim, or
    c. a so-called bypass application filed under 35 U.S.C. 111(a) which validly claims benefit under 35 U.S.C. 120 to a PCT application, which PCT application
        i. validly claims priority to an application filed in the JPO, or
        ii. validly claims priority to a PCT application that contains no priority claims, or
        iii. contains no priority claim;

2. Applicant must submit a copy of:
    a. The allowable/patentable claim(s) from the JPO application(s);
    b. An English translation of the allowable/patentable claim(s) and
    c. A statement that the English translation is accurate;
3. Applicant must:
    a. Ensure all the claims in the U.S. application must sufficiently correspond or be amended to sufficiently correspond to the allowable/patentable claim(s) in the JPO application(s) and
    b. Submit a claims correspondence table in English;
4. Examination of the U.S. application has not begun;
5. Applicant must submit:
    a. Documentation of prior office action:
        i. a copy of the office action(s) just prior to the "Decision to Grant a Patent" from each of the JPO application(s) containing the allowable/patentable claim(s) or
        ii. if the allowable/patentable claims(s) are from a "Notification of Reasons for Refusal" then the Notification of Reasons for Refusal or
        iii. if the JPO application is a first action allowance then no office action from the JPO is necessary should be indicated on the request/petition form;
    b. An English language translation of the JPO Office action from (5)(a)(i)-(ii) above
    c. A statement that the English translation is accurate;
6. Applicant must submit:
    a. An IDS listing the documents cited by the JPO examiner in the JPO office action (unless already submitted in this application)
    b. Copies of the documents except U.S. patents or U.S. patent application publications (unless already submitted in this application);

The request to participate in the PPH pilot program and petition comply with the above requirements. Accordingly, the above-identified application has been accorded "special" status.

Inquiries concerning this decision should be directed to Lee W. Young at 571-272-4549.

All other inquiries concerning the examination or status of the application is accessible in the PAIR system at http://www.uspto.gov/ebc.index.html.

This application will be forwarded to the examiner for action on the merits commensurate with this decision once this application's formality reviews have been completed.

Lee W. Young
TQAS, Technology Center 2800 – Semiconductors
Electrical & Optical Systems & Components

UNITED STATES PATENT AND TRADEMARK OFFICE

Commissioner for Patents
United States Patent and Trademark Office
P.O. Box 1450
Alexandria, VA 22313-1450
www.uspto.gov

PROCOPIO, CORY, HARGREAVES & SAVITCH LLP
525 B Street
Suite 2200
San Diego, CA 92101

MAILED

AUG 30 2010

OFFICE OF PETITIONS

In re Application of	:	
Robert Noble, et al.	:	
Application No. 12/412,554	:	DECISION ON PETITION
Filed: March 27, 2009	:	TO WITHDRAW
Attorney Docket No. 115299-02UTL1	:	FROM RECORD
	:	

This is a decision on the Request to Withdraw as attorney or agent of record under 37 C.F.R. § 1.36(b), filed July 23, 2010.

The request is **APPROVED**.

A grantable request to withdraw as attorney/agent of record must be signed by every attorney/agent seeking to withdraw or contain a clear indication that one attorney is signing on behalf of another/others. A request to withdraw will not be approved unless at least 30 (thirty) days would remain between the date of approval and the later of the expiration date of a time to file a response or the expiration date of the maximum time period which can be extended under 37 C.F.R. § 1.136(a).

The request was signed by Stephen C. Beurle on behalf of all attorneys of record. All attorneys/agents have been withdrawn. Applicant is reminded that there is no attorney of record at this time.

All future correspondence will be directed to the first named inventor Robert Noble at the address indicated below.

Telephone inquiries concerning this decision should be directed to Terri Johnson at 571-272-2991.

Terri Johnson
Petitions Examiner
Office of Petitions

cc: **Robert Noble**
7675 Dagget Street
Suite 150
San Diego, CA 92111

UNITED STATES PATENT AND TRADEMARK OFFICE

UNITED STATES DEPARTMENT OF COMMERCE
United States Patent and Trademark Office
Address: COMMISSIONER FOR PATENTS
P.O. Box 1450
Alexandria, Virginia 22313-1450
www.uspto.gov

APPLICATION NUMBER	FILING OR 371(C) DATE	FIRST NAMED APPLICANT	ATTY. DOCKET NO./TITLE
12/412,554	03/27/2009	Robert Noble	115299-02UTL1

CONFIRMATION NO. 7287

27189
PROCOPIO, CORY, HARGREAVES & SAVITCH LLP
525 B STREET
SUITE 2200
SAN DIEGO, CA 92101

POWER OF ATTORNEY NOTICE

Date Mailed: 08/30/2010

NOTICE REGARDING CHANGE OF POWER OF ATTORNEY

This is in response to the Power of Attorney filed 07/23/2010.

- The withdrawal as attorney in this application has been accepted. Future correspondence will be mailed to the new address of record. 37 CFR 1.33.

/tsjohnson/

Office of Data Management, Application Assistance Unit (571) 272-4000, or (571) 272-4200, or 1-888-786-0101

UNITED STATES PATENT AND TRADEMARK OFFICE

Commissioner for Patents
United States Patent and Trademark Office
P.O. Box 1450
Alexandria, VA 22313-1450
www.uspto.gov

INTERMEC TECHNOLOGIES CORPORATION
6001 36TH AVENUE WEST
EVERETT, WA 98203

MAILED

SEP 2 9 2011

OFFICE OF PETITIONS

In re Application of :
Dah-Weih Duan, et al. :
Application No. 12/412,627 : ON PETITION
Filed: March 27, 2009 :
Attorney Docket No.: YO897-0682R1C :

This is a decision on the petition under 37 CFR 1.137(b) to revive the above-identified application, filed September 16, 2011.

The petition is **GRANTED**.

The application became abandoned for failure to timely pay the issue on or before July 19, 2011, as required by the Notice of Allowance and Fee(s) Due, mailed April 19, 2011, which set a statutory period for reply of three (3) months. Accordingly, the application became abandoned on July 20, 2011. A Notice of Abandonment was subsequently mailed on August 5, 2011. On September 16, 2011, the present petition was filed.

It is noted that the address given on the petition differs from the address of record. If appropriate, a change of address should be filed in accordance with MPEP 601.03. A courtesy copy of this decision is being mailed to the address given on the petition; however, the Office will mail all future correspondence solely to the address of record.

The petition satisfies the requirements of 37 CFR 1.137(b) in that petitioner has supplied (1) the reply in the form of the $1,510 issue fee; (2) the petition fee of $1,620; and (3) an adequate statement of unintentional delay.

The application is being referred to the Office of Data Management to be processed into a patent.

Telephone inquires related to this decision should be directed to the undersigned at (571) 272-3204. Telephone inquiries related to processing as a patent should be directed to (571) 272-4200.

/SDB/

Sherry D. Brinkley
Petitions Examiner
Office of Petitions

cc: JOHN H. SHERMAN
40 INDIAN HILL TRAIL
CRYSTAL LAKE, IL 60012

UNITED STATES PATENT AND TRADEMARK OFFICE

Commissioner for Patents
United States Patent and Trademark Office
P.O. Box 1450
Alexandria, VA 22313-1450
www.uspto.gov

MOTOROLA MOBILITY, INC
600 NORTH US HIGHWAY 45
W2-55BB
LIBERTYVILLE IL 60048-5343

MAILED
MAR 21 2012
OFFICE OF PETITIONS

In re Application of :
Tirpak et al. :
Application No. 12/412,663 : DECISION ON PETITION
Filed: March 27, 2009 : PURSUANT TO
Attorney Docket No. BCS05124 : 37 C.F.R. § 1.137(B)
Title: SYSTEM AND METHOD FOR :
IMAGE SELECTION AND CAPTURE :
PARAMETER DETERMINATION :

This is a decision on the petition pursuant to 37 C.F.R. § 1.137(b), filed February 15, 2012, to revive the above-identified application.

This petition pursuant to 37 C.F.R. § 1.137(b) is **GRANTED**.

The above-identified application became abandoned for failure to reply in a timely manner to a non-final Office action, mailed August 9, 2011, which set a shortened statutory period for reply of three months. No response was received, and no extensions of time under the provisions of 37 C.F.R. § 1.136(a) were requested. Accordingly, the above-identified application became abandoned on November 10, 2011. A notice of abandonment was mailed on February 16, 2012, subsequent to the filing of this petition.

A grantable petition pursuant to 37 C.F.R. § 1.137(b) must be accompanied by:

(1) The reply required to the outstanding Office action or notice, unless previously filed;
(2) The petition fee as set forth in 37 C.F.R. § 1.17(m);
(3) A statement that the entire delay in filing the required reply from the due date for the reply until the filing of a grantable petition

pursuant to this paragraph was unintentional. The Commissioner may require additional information where there is a question whether the delay was unintentional, and;

(4) Any terminal disclaimer (and fee as set forth in 37 C.F.R. § 1.20(d)) required pursuant to paragraph (d) of this section.

With this petition, Petitioner has submitted an amendment, the petition fee, and the proper statement of unintentional delay. As such, the first three requirements of Rule 1.137(b) have been met. The fourth requirement of Rule 1.137(b) is not applicable.

The Technology Center will be notified of this decision, and jurisdiction over this application is transferred to the Technology Center, so that the application may receive further processing. The Technology Center's support staff will notify the Examiner of this decision, so that the amendment that was received on February 15, 2012 can be processed in due course.

Petitioner may find it beneficial to view Private PAIR within a fortnight of the present decision to ensure that the revival has been acknowledged by the Technology Center in response to this decision. It is noted that all inquiries with regard to any failure of that change in status should be directed to the Technology Center where that change of status must be effected - **the Office of Petitions cannot effectuate a change of status.**

Telephone inquiries regarding *this decision* should be directed to the undersigned at (571) 272-3225.[1] All other inquiries concerning this application should be directed to the Technology Center.

Paul Shanoski
Senior Attorney
Office of Petitions

1 Petitioner will note that all practice before the Office should be in writing, and the action of the Office will be based exclusively on the written record in the Office. See 37 C.F.R. § 1.2. As such, Petitioner is reminded that no telephone discussion may be controlling or considered authority for Petitioner's further action(s).

UNITED STATES PATENT AND TRADEMARK OFFICE

UNITED STATES DEPARTMENT OF COMMERCE
United States Patent and Trademark Office
Address: COMMISSIONER FOR PATENTS
P.O. Box 1450
Alexandria, Virginia 22313-1450
www.uspto.gov

APPLICATION NO.	FILING DATE	FIRST NAMED INVENTOR	ATTORNEY DOCKET NO.	CONFIRMATION NO.
12/412,688	03/27/2009	Shuqing Zeng	P008237-RD-MJL	7551

65798 7590 01/06/2012

MILLER IP GROUP, PLC
GENERAL MOTORS CORPORATION
42690 WOODWARD AVENUE
SUITE 200
BLOOMFIELD HILLS, MI 48304

EXAMINER	
FUELLING, MICHAEL	

ART UNIT	PAPER NUMBER
3626	

MAIL DATE	DELIVERY MODE
01/06/2012	PAPER

Please find below and/or attached an Office communication concerning this application or proceeding.

The time period for reply, if any, is set in the attached communication.

UNITED STATES PATENT AND TRADEMARK OFFICE

Commissioner for Patents
United States Patent and Trademark Office
P.O. Box 1450
Alexandria, VA 22313-1450
www.uspto.gov

JAN 06 2012

Miller IP Group, PLC
General Motors Corporation
42690 Woodward Avenue
Suite 200
Bloomfield Hills, MI 48304

In re Application of
Shuqing Zeng
Application No. 12/412,688
Filed: March 27, 2009
For: OPTIMAL CODING OF GPS MEASUREMENTS FOR PRECISE RELATIVE POSITIONING

: DECISION ON THE PETITION
: REGARDING REQUEST TO
: WITHDRAW REQUIREMENT
: FOR RESTRICTION

Applicant's petition under 37 CFR 1.144, filed November 9, 2011, requests the supervisor to withdraw the requirement for restriction in the Office action of September 27, 2011.

The petition is **GRANTED**.

A review of the file record indicates that on September 27, 2011, the examiner required restriction between Invention I, claims 1-9, Invention II, claims 10-13, and Invention III, claims 14-20. The applicant elected with traverse Invention I, claims 1-9 on October 11, 2011. On October 24, 2011 the examiner issued a non-final Office action that found the traversal to be not persuasive and made the restriction final. The applicant filed the instant petition on November 9, 2011.

In the above-noted petition, the applicant argues that the restriction was improper for the following reasons: 1) the restriction requirement uses the same reason for why the combination of Invention I does not require the particulars of the subcombination, Invention II, and why the subcombination has separate utility; 2) claims 1, 3, 4, 8 & 9 essentially mirror the subject matter of claim 10, and therefore the distinction of using Huffman encoders cannot be a valid reason for restriction; 3) the method steps recited in claims 14-20, Invention III inherently would require i) a stand-alone position and velocity estimator, ii) the observation prediction model, and iii) first and second differencers; and 4) the examiner has relied upon an improper classification when indicating where the 3 inventions above, are to be classified, and thus lacks a showing of serious burden.

With respect to argument 1) above, there is no requirement that the examiner cannot use the same reason to show that both a combination does not need the particulars of

the subcombination and that the subcombination has separate utility. With respect to argument 2) above, the argument that the claimed distinctions between claim 1 and 10 are largely provided for in the claims dependent upon claim 1 is well-taken. It is not seen that the examiner has provided an adequate showing why the inventions of the purported combination and subcombination are patentably distinct. With respect to argument 3) above, it is also well-taken that the examiner has not conclusively shown that the structures used in the system claims of Invention I are not inherent in the method claims of Invention III, particularly in view of the further defining of the structures used to perform the method steps in the dependent claims 15-20 of Invention III. With respect to argument 4) above, applicant's argument in the petition that the classifications provided by the examiner are clearly inaccurate is also agreed with. Given the extremely similar structures and method steps being claimed across claims 1-20, it seems unreasonable to conclude that the above inventions have the separate classifications deemed by the examiner in the original restriction requirement. Certainly, it strains credulity to assert that each invention belongs in a separate class. It's agreed that the classifications offered by the examiner are not reasonable for the reasons pointed out by the applicant in the petition as well as the similarities indicated above. The classifications therefore fail as proof used by the examiner to show why there would be a serious burden if the restriction were not required.

Given the above conclusions, the inventions of claims 1-9, 10-13 and 14-20 are not seen as properly being restrictable as combination/subcombinations or process and apparatus for the reasons given by the examiner, as they have not been shown to be distinct so as to be able to support separate patents. Furthermore, no sufficient showing of serious burden has been demonstrated by the examiner. Therefore the restriction made by the examiner on September 27, 2011 is hereby **WITHDRAWN**.

This application is being returned to the examiner to issue a new Office action that includes an examination on the merits of pending claims 1-20, as presented in the most recent amendment, in response to a non-final Office action, dated December 27, 2011, consistent with this decision.

The petition of November 9, 2011 is **GRANTED**.

Any questions or comments with respect to this decision should be forwarded to Quality Assurance Specialist Steven N. Meyers at (571) 272-6611.

Wynn Coggins, Director
Patent Technology Center 3600
(571) 272-5350

snm/snm: 1/4/12

SM

UNITED STATES PATENT AND TRADEMARK OFFICE

Commissioner for Patents
United States Patent and Trademark Office
P.O. Box 1450
Alexandria, VA 22313-1450
www.uspto.gov

NFOCUS NEUROMEDICAL, INC.
ATTN: FRANK P. BECKING
SUITE 100
2191 EAST BAYSHORE ROAD
PALO ALTO CA 94303

MAILED
APR 13 2011
OFFICE OF PETITIONS

In re Application of	:	
Dieck et al.	:	DECISION ON PETITION
Application No. 12/412,731	:	TO WITHDRAW
Filed: March 27, 2009	:	FROM RECORD
Attorney Docket No. 20004.4025	:	

This is a decision on the Request to Withdraw as attorney or agent of record under 37 C.F.R. § 1.36(b) filed March 16, 2011, which is being treated as a request to withdraw from employment in a proceeding before the Office under 37 C.F.R. § 10.40.

The request is **DISMISSED**.

Mark Stirrat does not have power of attorney in this patent application. Accordingly, the request to withdraw under 37 C.F.R. § 1.36(b) is not applicable.

The request to change the correspondence address of record is not accepted in view of Mark Stirrat not having power of attorney. See MPEP §§ 601.03 and 405.

All future communications from the Office will continue to be directed to the above-listed address until otherwise notified by applicant.

Currently, there is no outstanding Office action that requires a reply.

Telephone inquires concerning this decision should be directed to the undersigned at (571) 272-7751.

Joan Olszewski
Petitions Examiner
Office of Petitions

UNITED STATES PATENT AND TRADEMARK OFFICE

Commissioner for Patents
United States Patent and Trademark Office
P.O. Box 1450
Alexandria, VA 22313-1450
www.uspto.gov

MAILED

FEB 28 2011

OFFICE OF PETITIONS

Crockett & Crockett, P.C.
26020 ACERO
Suite 200
Mission Viejo, CA 92691

In re Application of	:	
Alex Vayser et al.	:	
Application No. 12/412,764	:	DECISION ON PETITION
Filed: March 27, 2009	:	TO WITHDRAW
Attorney Docket No. 213/156	:	FROM RECORD
	:	

This is a decision on the Request to Withdraw as attorney or agent of record under 37 C.F.R. § 1.36(b), filed January 20, 2011.

The request is **moot because a revocation of power of attorney has been filed.**

A review of the file record indicates that the power of attorney to Crockett & Crockett, P.C., has been revoked by the assignee of the patent application on January 31, 2011. Accordingly, the request to withdraw under 37 C.F.R. § 1.36(b) is moot.

All future communications from the Office will continue to be directed to the below-listed address until otherwise notified by applicant.

Telephone inquires concerning this decision should be directed to Kimberly Inabinet at 571-272-4618.

/Kimberly Inabinet/

Kimberly Inabinet
Petitions Examiner
Office of Petitions

cc: Kilpatrick Townsend & Stockton, LLP
Two Embarcadero Center
Eighth Floor
San Francisco, CA 94111-3834

UNITED STATES PATENT AND TRADEMARK OFFICE

Commissioner for Patents
United States Patent and Trademark Office
P.O. Box 1450
Alexandria, VA 22313-1450
www.uspto.gov

MAILED

AUG 27 2010

OFFICE OF PETITIONS

PROCOPIO, CORY, HARGREAVES,
& SAVITCH LLP
525 B STREET, SUITE 2200
SAN DIEGO CA 92101

In re Application of :
James F. MAHONEY, et al :
Application No. 12/412,780 : DECISION ON PETITION
Filed: March 27, 2009 : TO WITHDRAW
Attorney Docket No. 115299-02UTL2 : FROM RECORD
:

This is a decision on the Request to Withdraw as attorney or agent of record under 37 C.F.R. § 1.36(b), filed July 23, 2010.

The request is **NOT APPROVED.**

A grantable request to withdraw as attorney/agent of record must be signed by every attorney/agent seeking to withdraw or contain a clear indication that one attorney is signing on behalf of another/others. The Office requires the practitioner(s) requesting withdrawal to certify that he, she, or they have: (1) given reasonable notice to the client, prior to the expiration of the response period, that the practitioner(s) intends to withdraw from employment; (2) delivered to the client or a duly authorized representative of the client all papers and property (including funds) to which the client is entitled; and (3) notified the client of any responses that may be due and the time frame within which the client must respond, pursuant 37 CFR 10.40(c).

Accordingly, the request cannot be approved because there is no clear indication that the acts noted above at items (1) and (3) have been performed.

Further, the Office will no longer accept address changes to a new practitioner or law firm filed with a Request, absent the filing of a power of attorney to the new representative. The Office will either change the correspondence address of record to the most current address information provided for the assignee of the entire interest who properly became of record under 37 CFR 3.71 or, if no assignee of the entire interest has properly been made of record under 37 CFR 3.71, the most current address information provided for the first named inventor.

In this regard, the request to withdraw from record cannot be approved because the address change is not to that of the first named inventor.

All future communications from the Office will continue to be directed to the above-listed address until otherwise notified by applicant.

Telephone inquiries concerning this decision should be directed to the undersigned at 571-272-6735.

/dcg/
Diane C. Goodwyn
Petitions Examiner
Office of Petitions

cc: ROBERT NOBLE
7675 DAGGET STREET, SUITE 150
SAN DIEGO CA 92111

UNITED STATES PATENT AND TRADEMARK OFFICE

Commissioner for Patents
United States Patent and Trademark Office
P.O. Box 1450
Alexandria, VA 22313-1450
www.uspto.gov

MAILED

SEP 27 2010

OFFICE OF PETITIONS

PROCOPIO, CORY, HARGREAVES & SAVITCH LLP
525 B STREET, SUITE 2200
SAN DIEGO CA 92101

In re Application of	:	
James F. MAHONEY, et al	:	
Application No. 12/412,780	:	DECISION ON PETITION
Filed: March 27, 2009	:	TO WITHDRAW
Attorney Docket No. 115299-02UTL2	:	FROM RECORD
	:	

This is a decision on the Request to Withdraw as attorney or agent of record under 37 C.F.R. § 1.36(b), filed September 13, 2010.

The request is **APPROVED**.

A grantable request to withdraw as attorney/agent of record must be signed by every attorney/agent seeking to withdraw or contain a clear indication that one attorney is signing on behalf of another/others. The Office requires the practitioner(s) requesting withdrawal to certify that he, she, or they have: (1) given reasonable notice to the client, prior to the expiration of the response period, that the practitioner(s) intends to withdraw from employment; (2) delivered to the client or a duly authorized representative of the client all papers and property (including funds) to which the client is entitled; and (3) notified the client of any responses that may be due and the time frame within which the client must respond, pursuant 37 CFR 10.40(c).

The request was signed by Stephen C, Beuerle, on behalf of the attorneys of record associated with Customer No. 27189.

The attorneys of record associated with Customer No. 27189 have been withdrawn.

Applicant is reminded that there is no attorney of record at this time.

The correspondence address for future communications from the Office has been changed and the new correspondence address is indicated below.

Telephone inquiries concerning this decision should be directed to the undersigned at 571-272-6735.

/DCG/
Diane C. Goodwyn
Petitions Examiner
Office of Petitions

cc: NOBLE ENVIRONMENTAL TECHNOLOGIES CORPORATION
7675 DAGGET STREET, SUITE 150
SAN DIEGO, CA 92111

UNITED STATES PATENT AND TRADEMARK OFFICE

UNITED STATES DEPARTMENT OF COMMERCE
United States Patent and Trademark Office
Address: COMMISSIONER FOR PATENTS
P.O. Box 1450
Alexandria, Virginia 22313-1450
www.uspto.gov

APPLICATION NUMBER	FILING OR 371(C) DATE	FIRST NAMED APPLICANT	ATTY. DOCKET NO./TITLE
12/412,780	03/27/2009	James F. Mahoney	115299-02UTL2

CONFIRMATION NO. 7735

POWER OF ATTORNEY NOTICE

27189
PROCOPIO, CORY, HARGREAVES & SAVITCH LLP
525 B STREET
SUITE 2200
SAN DIEGO, CA 92101

OC000000043714988

Date Mailed: 09/27/2010

NOTICE REGARDING CHANGE OF POWER OF ATTORNEY

This is in response to the Power of Attorney filed 09/13/2010.

- The withdrawal as attorney in this application has been accepted. Future correspondence will be mailed to the new address of record. 37 CFR 1.33.

/dcgoodwyn/

Office of Data Management, Application Assistance Unit (571) 272-4000, or (571) 272-4200, or 1-888-786-0101

UNITED STATES PATENT AND TRADEMARK OFFICE

Commissioner for Patents
United States Patent and Trademark Office
P.O. Box 1450
Alexandria, VA 22313-1450
www.uspto.gov

HUSCH BLACKWELL LLP
190 CARONDELET PLAZA
SUITE 600
ST. LOUIS, MO 63105-3441

MAILED
SEP 28 2010
OFFICE OF PETITIONS

In re Application of
Mario Dzeko, et al.
Application No. 12/412,851
Filed: March 27, 2009
Attorney Docket No. 462630-011

DECISION ON PETITION

This is a decision on the petition under the unintentional provisions of 37 CFR 1.137(b), filed August 18, 2010, to revive the above-identified application.

The application became abandoned for failure to reply in a timely manner to the Notice to File Corrected Application Papers (Notice), mailed April 8, 2009. The Notice set a period for reply of two (2) months from the mail date of the Notice. No extensions of time under the provisions of 37 CFR 1.136(a) were obtained. Accordingly, the application became abandoned on June 9, 2009.

The petition satisfies the requirements of 37 CFR 1.137(b) in that petitioner has supplied (1) the reply in the form of a reply with drawings, (2) the petition fee of $1620, and (3) a proper statement of unintentional delay.

In view of the above, the petition is **GRANTED**.

Telephone inquiries concerning this decision should be directed to undersigned at (571) 272-1642. All other inquiries concerning the examination or status of this application should be directed to the Office of Patent Application Processing at their hotline 571-272-4000.

This application is being referred to the Office of Patent Application Processing for pre-examination processing of the reply received August 18, 2010.

April M. Wise
Petitions Examiner
Office of Petitions

SPE RESPONSE FOR CERTIFICATE OF CORRECTION

Paper No.: _____

DATE : 2-9-11

TO SPE OF : ART UNIT 2627

SUBJECT : Request for Certificate of Correction for Appl. No.: 12412870 Patent No.: 7830637

Please respond to this request for a certificate of correction within 7 days.

FOR IFW FILES:

Please review the requested changes/corrections as shown in the **COCIN** document(s) in the IFW application image. No new matter should be introduced, nor should the scope or meaning of the claims be changed.

Please complete the response (see below) and forward the completed response to scanning using document code **COCX**.

FOR PAPER FILES:

Please review the requested changes/corrections as shown in the attached certificate of correction. Please complete this form (see below) and forward it with the file to:

Certificates of Correction Branch (C of C)
Randolph Square – 9D10-E
Palm Location 7580

Omega Lewis
Certificates of Correction Branch

703-756-1575

Thank You For Your Assistance

The request for issuing the above-identified correction(s) is hereby:
Note your decision on the appropriate box.

- ☒ **Approved** — **All** changes apply.
- ☐ **Approved in Part** — Specify below which changes **do not** apply.
- ☐ **Denied** — State the reasons for denial below.

Comments: The correction of typographical errors have been reviewed and approved

/Mark Blouin/ 5/17/11

/Hoa T. Nguyen/ 5/18/11 — **SPE**

2627 — **Art Unit**

UNITED STATES PATENT AND TRADEMARK OFFICE

UNITED STATES DEPARTMENT OF COMMERCE
United States Patent and Trademark Office
Address: COMMISSIONER FOR PATENTS
P.O. Box 1450
Alexandria, Virginia 22313-1450
www.uspto.gov

APPLICATION NO.	FILING DATE	FIRST NAMED INVENTOR	ATTORNEY DOCKET NO.	CONFIRMATION NO.
12/412,891	03/27/2009	Junichiro Matsui	J-09-0228	7968

7590 01/07/2011

Mr. Jackson Chen
6535 N. STATE HWY 161
IRVING, TX 75039

EXAMINER
KUNTZ, CURTIS A

ART UNIT	PAPER NUMBER
2614	

NOTIFICATION DATE	DELIVERY MODE
01/07/2011	ELECTRONIC

DECISION GRANTING PETITION UNDER 37 CFR 1.138(d)

The declaration of express abandonment is recognized

This is in response to the petition under 37 CFR 1.138(d), requesting for a refund of any previously paid search fee and excess claims fee in the above-identified application.

The petition is granted.

The express abandonment is recognized. Any previously paid search fee and excess claims fee are hereby refunded.

Telephone inquiries should be directed to the Office of Data Management at (571) 272-4200.

Nioni Farmer

Patent Publication Branch
Office of Data Management

Adjustment date: 01/05/2011 NFARMER
02 FC:1111 -540.00 OP
04 FC:1202 -416.00 OP
05 FC:1201 -[illegible] OP

FORM PET651G (Rev. 08/07)

UNITED STATES PATENT AND TRADEMARK OFFICE

Commissioner for Patents
United States Patent and Trademark Office
P. O. Box 1450
Alexandria, VA 22313-1450
www.uspto.gov

WESTERMAN HATTORI DANIELS & ADRIAN, LLP
1250 CONNECTICUT AVENUE, NW
SUITE 700
WASHINGTON, DC 20036

MAILED

APR 26 2011

OFFICE OF PETITIONS

In re Application of :
Satoshi Torii :
Application No. 12/413,052 :
Filed: March 27, 2009 :
Attorney Docket No. NONVOLATILE SEMICONDUCTOR MEMORY DEVICE, AND READING METHOD, WRITING METHOD AND ERASING METHOD OF NONVOLATILE SEMICONDUCTOR MEMORY DEVICE

ON PETITION

This is a decision on the petition, filed April 25, 2011 under 37 CFR 1.313(c)(2) to withdraw the above-identified application from issue after payment of the issue fee.

The petition is **GRANTED**.

The above-identified application is withdrawn from issue for consideration of a submission under 37 CFR 1.114 (request for continued examination). See 37 CFR 1.313(c)(2).

Petitioner is advised that the issue fee paid on March 24, 2011 in the above-identified application cannot be refunded. If, however, the above-identified application is again allowed, petitioner may request that it be applied towards the issue fee required by the new Notice of Allowance.[1]

Telephone inquiries should be directed to Irvin Dingle at (571) 272-3210.

This matter is being referred to Technology Center AU 2827 for processing of the request for continued examination under 37 CFR 1.114 and for consideration of the concurrently filed Information Disclosure Statement.

/Irvin Dingle/
Irvin Dingle
Petitions Examiner
Office of Petitions

[1] The request to apply the issue fee to the new Notice may be satisfied by completing and returning the new Issue Fee Transmittal Form PTOL-85(b), which includes the following language thereon: Commissioner for Patents is requested to apply the Issue Fee and Publication Fee (if any) or re-apply any previously paid issue fee to the application identified above. Petitioner is advised that, whether a fee is indicated as being due or not, the Issue Fee Transmittal Form **must** be completed and timely submitted to avoid abandonment. Note the language in bold text on the first page of the Notice of Allowance and Fee(s) Due (PTOL-85).

UNITED STATES PATENT AND TRADEMARK OFFICE

Commissioner for Patents
United States Patent and Trademark Office
P.O. Box 1450
Alexandria, VA 22313-1450
www.uspto.gov

Decision Date : September 16,2011

In re Application of :

Lee Harris

Application No : 12413183

Filed : 27-Mar-2009

Attorney Docket No : 0004952.0001

DECISION ON PETITION

UNDER CFR 1.137(b)

This is an electronic decision on the petition under 37 CFR 1.137(b), filed September 16,2011, to revive the above-identified application.

The petition is **GRANTED.**

The above-identified application became abandoned for failure to reply in a timely manner to the Notice of Allowance and Issue Fee(s) Due. The date of abandonment is the day after the expiration date of the period set for reply in the Notice.

The electronic petition satisfies the conditions for revival pursuant to the provisions of 37 CFR 1.137(b) in that (1) the reply in the form of payment of the Issue Fee and the Publication Fee (if necessary); (2) the petition fee as set forth in 37 CFR 1.17 (m); (3) the drawing correction and/or other deficiencies (if necessary); and (4) the required statement of unintentional delay have been received. Accordingly, the Issue Fee payment is accepted as having been unintentionally delayed.

Telephone inquiries concerning this decision should be directed to the Patent Electronic Business Center (EBC) at 866-217-9197.

This application file is being directed to the Office of Data Management.

Office of Petitions

Doc Code: PET.AUTO Document Description: Petition automatically granted by EFS-Web	PTO/SB/64 U.S. Patent and Trademark Office Department of Commerce

Electronic Petition Request	PETITION FOR REVIVAL OF AN APPLICATION FOR PATENT ABANDONED UNINTENTIONALLY UNDER 37 CFR 1.137(b)
Application Number	12413183
Filing Date	27-Mar-2009
First Named Inventor	Lee Harris
Art Unit	3727
Examiner Name	MARK SPISICH
Attorney Docket Number	0004952.0001
Title	HYDRO TURBO CLEAN POWER WASHER

The above-identified application became abandoned for failure to file a timely and proper reply to a notice or action by the United States Patent and Trademark Office. The date of abandonment is the day after the expiration date of the period set for reply in the office notice or action plus any extensions of time actually obtained.

APPLICANT HEREBY PETITIONS FOR REVIVAL OF THIS APPLICATION

NOTE: A grantable petition requires the following items:
(1) Petition fee;
(2) Reply and/or issue fee;
(3) Terminal disclaimer with disclaimer fee – required for all utility and plant applications filed before June 8, 1995; and for all design applications;
(4) Statement that the entire delay was unintentional.

Petition fee
The petition fee under 37CFR 1.17(m) is attached.

☐ Applicant claims SMALL ENTITY status. See 37 CFR 1.27.

☐ Applicant is no longer claiming SMALL ENTITY status. See 37 CFR 1.27(g)(2).

☒ Applicant(s) status remains as SMALL ENTITY.

☐ Applicant(s) status remains as other than SMALL ENTITY.

Issue Fee and Publication Fee :

Issue Fee and Publication Fee must accompany ePetition.

☒ Issue Fee Transmittal is attached

Drawing corrections and/ or other deficiencies.

◯ Drawing corrections and/ or other deficiencies are not required ◉ I certify, in accordance with 37 CFR 1.4.(D)(4), that drawing corrections and/ or other deficiencies have previously been filed on 07-25-2011 ◯ Drawing corrections and/ or other deficiencies are attached. ☒ STATEMENT: The entire delay in filing the required reply from the due date for the required reply until the filing of a grantable petition under 37 CFR 1.137(b) was unintentional.
THIS PORTION MUST BE COMPLETED BY THE SIGNATORY OR SIGNATORIES I certify, in accordance with 37 CFR 1.4(d)(4) that I am: ◉ An attorney or agent registered to practice before the Patent and Trademark Office who has been given power of attorney in this application. ◯ An attorney or agent registered to practice before the Patent and Trademark Office, acting in a representative capacity. ◯ A sole inventor ◯ A joint inventor; I certify that I am authorized to sign this submission on behalf of all of the inventors. ◯ A joint inventor; all of whom are signing this e-petition. ◯ The assignee of record of the entire interest that has properly made itself of record pursuant to 37 CFR 3.71.

Signature	/aks/
Name	Adam K Sacharoff
Registration Number	43075

UNITED STATES PATENT AND TRADEMARK OFFICE

Commissioner for Patents
United States Patent and Trademark Office
P.O. Box 1450
Alexandria, VA 22313-1450
www.uspto.gov

BENESCH, FRIEDLANDER, COPLAN & ARONOFF LLP
ATTN: IP DEPARTMENT DOCKET CLERK
200 PUBLIC SQUARE
SUITE 2300
CLEVELAND OH 44114-2378

MAILED

FEB 28 2011

OFFICE OF PETITIONS

In re Application of

John Johnson et al.
Application No. 12/413,198
Filed: March 27, 2009
Attorney Docket No. **69350-2**

DECISION ON PETITION
TO WITHDRAW
FROM RECORD

This is a decision on the Request to Withdraw as attorney or agent of record under 37 CFR § 1.36(b), filed January 19, 2011.

The request is **APPROVED**.

A grantable request to withdraw as attorney/agent of record must be signed by every attorney/agent seeking to withdraw or contain a clear indication that one attorney is signing on behalf of another/others. The Office requires the practitioner(s) requesting withdrawal to certify that he, she, or they have: (1) given reasonable notice to the client, prior to the expiration of the response period, that the practitioner(s) intends to withdraw from employment; (2) delivered to the client or a duly authorized representative of the client all papers and property (including funds) to which the client is entitled; and (3) notified the client of any responses that may be due and the time frame within which the client must respond , pursuant to 37 CFR 10.40.

The request was signed by Luis A. Carrion on behalf of all attorneys of record who are associated with Customer Number 21130.

All attorneys/agents associated with Customer Number 21130 have been withdrawn. Applicant is reminded that there is no attorney of record at this time.

The correspondence address of record has been changed and all future correspondence will be directed to the first named inventor John Johnson at the address indicated below.

There is no outstanding Office action mailed that requires a reply from the applicant.

Telephone inquiries concerning this decision should be directed to the undersigned at 571-272-4584.

/JoAnne Burke/
JoAnne Burke
Petitions Examiner
Office of Petitions

cc: John Johnson
6721 Lake Trail Drive
Westerville, OH 43082

UNITED STATES PATENT AND TRADEMARK OFFICE

Commissioner for Patents
United States Patent and Trademark Office
P.O. Box 1450
Alexandria, VA 22313-1450
www.uspto.gov

VIVACQUA LAW, PLLC
455 East Eisenhower Parkway, Suite 200
ANN ARBOR MI 48108

MAILED
NOV 28 2011
OFFICE OF PETITIONS

In re Application of :
Ames et al. : ON PETITION
Application No.: 12/413,230 :
Filed: March 27, 2009 :
Attorney Docket No.: P001719-PTTA-DLT :

This is a decision on the petition under 37 CFR 1.47(a), filed June 8, 2009.

The petition is **DISMISSED**.

Any request for reconsideration of this decision must be submitted within TWO (2) MONTHS from the mail date of this decision. Extensions of time under 37 CFR 1.136(a) are permitted. Any response should be entitled "Request for Reconsideration of Petition Under 37 CFR 1.47(a)" and may include an oath or declaration executed by the inventor. **Failure to respond will result in abandonment of the application.**

A grantable petition under 37 CFR 1.47(a) requires:

(1) a petition including proof of the pertinent facts establishing that the joint inventor(s) refuses to join, or cannot be found or reached after diligent effort,
(2) a proper oath or Declaration executed by the available joint inventor(s),
(3) the petition fee of $200, and
(4) the last known address of the omitted inventor(s).

This petition lacks item (1) above.

As to item (1), applicant has failed to establish that non-signing joint inventor Charles F. Long has refused to sign the declaration.

The Office requires that the non-signing inventor be provided with a complete copy of the application as filed. This includes the specification with claims, drawings, if any, and a declaration. See MPEP 409.03(d). The affidavit off Robert J. Delmotte, IP Coordinator of General Motors, Inc., contains an exhibit of an email, created and transmitted October 31, 2008, to the non-signing inventor, requesting his cooperation in the filing of the above-identified application and an exhibit of an email, transmitted March 18, 2009, from Keith Donnelly, legal

counsel of Allison Transmission, Inc. to Mr. Delmotte that states he has advised Allison inventors to refrain from signing any patent documents from Mr. Delmotte's office.

Petitioner is informed that e-mailing is generally not accepted as a means to communicate with non-signing inventors. This is because the Office cannot know definitely if the message was received; people are not as careful in deleting e-mails as they are in throwing out mail as shown by bulk folder deletions and the fact that some people might not check e-mails frequently; the Office does not know if the recipient has the program to open the specific attachment; and PTO guidelines regarding accepting e-mail reflects the fact that the Office does not have the same confidence in e-mail as it does in USPS service.

The Office typically requires documentary evidence of successful e-mailing in the form of a response e-mail from the non-signing inventor in which the inventor acknowledges receipt of the e-mail and his ability to read the attachments. Sending an e-mail alone is not sufficient.

The petition is not grantable because it is unclear that Mr. Long received and could access the email and Mr. Donnelly is legal counsel for Allison Transmission, Inc., not Mr. Long. So, even if Mr. Donnelly's March 18, 2009 email was in response to the October 31, 2008 email to Mr. Long that was possibly forwarded to Mr. Donnelly, Mr. Donnelly does not appear to have the authority to bind Mr. Long. This is not a situation where the non-signer's chosen attorney is conducting business on the inventor's behalf. The non-signer must speak/write for himself.

Petitioner is encouraged to utilize mail service when sending the non-signing inventor a copy of the application and copies of the declaration and assignment for his execution.

Inventor Long must have the complete application in his possession in order to make an informed decision as to whether he will join in its filing. When petitioner can show that Inventor Long was mailed or received the complete application and that he either refused to sign the declaration or would not respond to the request that he sign the declaration within a reasonable amount of time, petitioner will have satisfied this requirement.

Deposit account no. 07-0960 will be charge the $200.00 Rule 47 petition fee.

Further correspondence with respect to this matter should be addressed as follows:

By mail: Mail Stop PETITION
Commissioner for Patents
Post Office Box 1450
Alexandria, VA 22313-1450

By hand: U.S. Patent and Trademark Office
Customer Service Window, Mail Stop Petition
Randolph Building
401 Dulany Street
Alexandria, VA 22314

By FAX: (571) 273-8300 - ATTN: Office of Petitions

By internet: EFS-Web
www.uspto.gov/ebc/efs_help.html
(for help using EFS-Web call the
Patent Electronic Business Center
at (866) 217-9197)

Telephone inquiries should be directed to the undersigned at (571) 272-3230.

Shirene Willis Brantley

Shirene Willis Brantley
Senior Petitions Attorney
Office of Petitions

UNITED STATES PATENT AND TRADEMARK OFFICE

Commissioner for Patents
United States Patent and Trademark Office
P.O. Box 1450
Alexandria, VA 22313-1450
www.uspto.gov

MAILED

APR 06 2012

OFFICE OF PETITIONS

VIVACQUA LAW, PLLC
455 East Eisenhower Parkway, Suite 200
ANN ARBOR MI 48108

In re Application of	:	DECISION NOTING JOINDER OF
Ames et al.	:	PREVIOUSLY NON-SIGNING
Application No.: 12/413,230	:	INVENTOR AND DISMISSING
Filed: March 27, 2009	:	PETITION UNDER 37 CFR 1.47(a)
Attorney Docket No.: P001719-PTTA-DLT	:	AS MOOT

Papers filed on March 28, 2012 in reply to a decision refusing status under 37 CFR 1.47(a), mailed on November 28, 2011, included a declaration signed by the previously non-signing inventor, Charles F. Long, in compliance with 37 CFR 1.63.

In view of the joinder of the inventor, further consideration under 37 CFR 1.47(a) is moot; this application does not have any rule 1.47(a) status and no such status should appear on the file wrapper. This application need not be returned to this office for any further consideration under 37 CFR 1.47(a).

Regarding fees, the $200.00 Rule 47 petition fee was charged on November 28, 2011. Only one petition fee is required. Accordingly, deposit account no. 07-0960 will be refunded the second Rule 47 petition fee, submitted with the present petition.

After the mailing of this decision, the application will be forwarded to Technology Center G.A.U. 3655 for consideration of the amendment filed March 1, 2012.

Telephone inquiries should be directed to the undersigned at (571) 272-3230.

Shirene Willis Brantley

Shirene Willis Brantley
Senior Petitions Attorney
Office of Petitions

SPE RESPONSE FOR CERTIFICATE OF CORRECTION

Paper No.: _____

DATE : 12/28/10

TO SPE OF : ART UNIT 1624

SUBJECT : Request for Certificate of Correction for Appl. No.: 12413235 Patent No.: 7781587

CofC mailroom date: 12/13/10

Please respond to this request for a certificate of correction within 7 days.

FOR IFW FILES:

Please review the requested changes/corrections as shown in the **COCIN** document(s) in the IFW application image. No new matter should be introduced, nor should the scope or meaning of the claims be changed.

Please complete the response (see below) and forward the completed response to scanning using document code **COCX**.

FOR PAPER FILES:

Please review the requested changes/corrections as shown in the attached certificate of correction. Please complete this form (see below) and forward it with the file to:

Certificates of Correction Branch (CofC)
Randolph Square – 9D10-A
Palm Location 7580
You can fax the Directors/SPE response to 571-270-9990

Lamonte Newsome
Certificates of Correction Branch
571-272-3421

Thank You For Your Assistance

The request for issuing the above-identified correction(s) is hereby:
Note your decision on the appropriate box.

☒ **Approved**	**All** changes apply.
☐ **Approved in Part**	Specify below which changes **do not** apply.
☐ **Denied**	State the reasons for denial below.

SPE _____ **Art Unit** 1624

UNITED STATES PATENT AND TRADEMARK OFFICE

UNITED STATES DEPARTMENT OF COMMERCE
United States Patent and Trademark Office
Address: COMMISSIONER FOR PATENTS
P.O. Box 1450
Alexandria, Virginia 22313-1450
www.uspto.gov

APPLICATION NO.	FILING DATE	FIRST NAMED INVENTOR	ATTORNEY DOCKET NO.	CONFIRMATION NO.
12/413,237	03/27/2009	Hongqing BAO	13674-247	8631

7590 09/08/2010

Huawei/BHGL
P.O. Box 10395
Chicago, IL 60610

EXAMINER	
BARRON JR, GILBERTO	
ART UNIT	PAPER NUMBER
2432	
MAIL DATE	DELIVERY MODE
09/08/2010	PAPER

DECISION GRANTING PETITION UNDER 37 CFR 1.138(d)

The declaration of express abandonment is recognized

This is in response to the petition under 37 CFR 1.138(d), requesting for a refund of any previously paid search fee and excess claims fee in the above-identified application.

The petition is granted.

The express abandonment is recognized. Any previously paid search fee and excess claims fee are hereby refunded.

Telephone inquiries should be directed to the Office of Data Management at (571) 272-4200.

Patent Publication Branch
Office of Data Management

Issue Classification	Application/Control No.	Applicant(s)/Patent under Reexamination	
	12/413,258	TRAVERS ET AL.	
	Examiner	Art Unit	
	FRANK LU	1634	

ISSUE CLASSIFICATION

ORIGINAL						CROSS REFERENCE(S)						
CLASS				SUBCLASS	CLASS	SUBCLASS (ONE SUBCLASS PER BLOCK)						
435				6.12	435	6.1	6.11	91.1	91.2			
INTERNATIONAL CLASSIFICATION					536	23.1	24.3	24.33	25.3			
C	1	2	Q	1/68								
C	1	2	P	19/34								
C	0	7	H	21/02								
C	0	7	H	21/04								
C	0	7	H	21/00								

(Assistant Examiner) (Date)	/Frank W Lu/ 2/1/2012	Total Claims Allowed: 13	
(Legal Instruments Examiner) (Date)	(Primary Examiner) (Date)	O.G. Print Claim(s) 1	O.G. Print Fig. None

☐ Claims renumbered in the same order as presented by applicant ☐ CPA ☐ T.D. ☐ R.1.47

Final	Original	Final	Original	Final	Original	Final	Original	Final	Original	Final	Original	Final	Original
1	1		31		61		91		121		151		181
	2		32		62		92		122		152		182
	3		33		63		93		123		153		183
	4		34		64		94		124		154		184
2	5		35		65		95		125		155		185
3	6		36		66		96		126		156		186
4	7		37		67		97		127		157		187
5	8		38		68		98		128		158		188
6	9		39		69		99		129		159		189
7	10		40		70		100		130		160		190
8	11		41		71		101		131		161		191
9	12		42		72		102		132		162		192
	13		43		73		103		133		163		193
	14		44		74		104		134		164		194
10	15		45		75		105		135		165		195
	16		46		76		106		136		166		196
11	17		47		77		107		137		167		197
12	18		48		78		108		138		168		198
	19		49		79		109		139		169		199
	20		50		80		110		140		170		200
	21		51		81		111		141		171		201
	22		52		82		112		142		172		202
	23		53		83		113		143		173		203
	24		54		84		114		144		174		204
	25		55		85		115		145		175		205
	26		56		86		116		146		176		206
13	27		57		87		117		147		177		207
	28		58		88		118		148		178		208
	29		59		89		119		149		179		209
	30		60		90		120		150		180		210

UNITED STATES PATENT AND TRADEMARK OFFICE

Commissioner for Patents
United States Patent and Trademark Office
P.O. Box 1450
Alexandria, VA 22313-1450
www.uspto.gov

UC BERKELEY – OTL
BOZICEVIC, FIELD & FRANCIS LLP
1900 UNIVERSITY AVENUE, SUITE 200
EAST PALO ALTO, CA 94303

MAILED

AUG 2 0 2010

OFFICE OF PETITIONS

Applicant: Rubinsky, et al.
Appl. No.: 12/413,357
Filing Date: March 27, 2009
Title: BALLOON CATHETER METHOD FOR REDUCINT RESTENOSIS VIA IRREVERSIBLE ELECTROPORATION
Attorney Docket No.: BERK-087US2
Pub. No.: US 2009/0247933 A1
Pub. Date: October 1, 2009

This is a decision on the request for a corrected patent application publication under 37 CFR 1.221(b), received on December 30, 2009, for the above-identified application.

The request is DISMISSED.

Applicant requests that the application be republished because the patent application publication contains material errors on the front page of the publication where the citizenship for "Elad Maor" was listed as "US" instead of "IL".

37 CFR 1.221 (b) is applicable "only when the Office makes a material mistake which is apparent from Office records.... Any request for a corrected publication or revised patent application publication other than provided as provided in paragraph (a) of this section must be filed within two months from the date of the patent application publication. This period is not extendable." A material mistake must affect the public's ability to appreciate the technical disclosure of the patent application publication, to determine the scope of the patent application publication, or to determine the scope of the provisional rights that an applicant may seek to enforce upon issuance of a patent. [1]

The request for corrected publication, received on December 30, 2009, was not timely filed under 37 CFR 1.221(b).

The error on the front page of the publication wherein the citizenship for "Elad Maor" is listed as "US" instead of "IL" is not a material Office error under 37 CFR 1.221. The misprinting of the applicant's citizenship does not affect the understanding of the application. The mistake does

[1] Changes to Implement Eighteen-Month Publication of Patent Applications, 65 FR 57023, 57038 (Sept. 20, 2000), 1239, Off. Gaz. Pat. Office Notices 63, 75 (Oct. 10, 2000) (final rule).

not affect the public's ability to appreciate the technical disclosure of the patent application publication, or determine the scope of the patent application publication or determine the scope of the provisional rights that an applicant may seek to enforce upon issuance of a patent.

The ADS submitted with the application on March 27, 2009 the citizenship is listed as "US". The Declaration signed by inventor Maor stated the citizenship is Israel, the other Declaration stated the citizenship is US.

On April 14, 2009 and June 19, 2009, a Filing Receipt was mailed by the Office, which improperly listed the applicant's citizenship. To avoid this type of problem in the future, applicant's representative should correct the error and make a request for a corrected filing receipt prior to export of the application to the publisher and publication of the application.

The applicant is advised that a "request for republication of an application previously published" may be filed under 37 CFR 1.221(a). Such a request for republication "must include a copy of the application compliance with the Office's electronic filing system requirements and be accompanied by the publication fee set forth in § 1.18(d) and the processing fee set forth in § 1.17(i)." If the request for republication does not comply with the electronic filing system requirements, the republication will not take place and the publication fee set forth in § 1.18(d) will be refunded. The processing fee will be retained.

A guide for filing a request for a Pre-Grant Publication, such as a request for republication, may be found on the link below:

http://www.uspto.gov/ebc/portal/tutorials.htm

Any request for republication under 37 CFR 1.221(a), must be submitted via the EFS system, as a "Pre-Grant Publication" and questions or request for reconsideration of the decision, should be addressed as follows:

By mail to: Mail Stop PGPUB
Commissioner for Patents
P.O. Box 1450
Alexandria, Va. 22313-1450

Inquiries relating to this matter may be directed to Mark Polutta at (571) 272-7709.

Mark Polutta
Senior Legal Advisor
Office of Patent Legal Administration
Office of the Deputy Commissioner
for Patent Examination Policy

Doc Code: PET.GREEN
Document Description: Petition for Green Tech Pilot

PTO/SB/420 (05-10)
Approved for use through 01/31/2011. OMB 0651-0062
U.S. Patent and Trademark Office, U.S. DEPARTMENT OF COMMERCE
Under the Paperwork Reduction Act of 1995, no persons are required to respond to a collection of information unless it displays a valid OMB control number.

PETITION TO MAKE SPECIAL UNDER THE GREEN TECHNOLOGY PILOT PROGRAM

Attorney Docket Number: 69290-8005.US01	Application Number (if known): 12/413,444	Filing date: May 27, 2009

First Named Inventor: Lee Lisheng Huang

Title: METHODS OF MAKING ENERGY EFFICIENT COOKWARE

APPLICANT HEREBY REQUESTS TO PARTICIPATE IN THE GREEN TECHNOLOGY PILOT PROGRAM FOR THE ABOVE-IDENTIFIED APPLICATION. **See Instruction Sheet on page 2.**

This petition must be timely filed electronically using the USPTO electronic filing system, EFS-Web.

1. By filing this petition:

   Applicant is requesting early publication: Applicant hereby requests early publication under 37 CFR 1.219 and the publication fee set forth in 37 CFR 1.18(d) accompanies this request.

2. By filing this petition: applicant is agreeing to make an election without traverse in a telephonic interview and elect an invention that meets the eligibility requirements set forth in the notice titled "Pilot Program for Green Technologies Including Greenhouse Gas Reduction," as modified by the notice titled "Elimination of Classification Requirement in the Green Technology Pilot Program," each of which was published in the Federal Register, if the Office determines that the claims are not obviously directed to a single invention.

3. This request is accompanied by statements of special status for the eligibility requirement.

4. The application contains no more than three (3) independent claims and twenty (20) total claims.

5. The application does not contain any multiple dependent claims.

6. Other attachments: Preliminary Amendment

Signature	Date Aug 4 2010
Name (Print/Typed) Brian R. Coleman	Registration Number 39,145

Note: *Signatures of all the inventors or assignees of record of the entire interest or their representative(s) are required in accordance with 37 CFR 1.33 and 11.18. Please see 37 CFR 1.4(d) for the form of the signature. If necessary, submit multiple forms for more than one signature, see below*.*

☑ *Total of 1 forms are submitted.

The information is required to obtain or retain a benefit by the public which is to file (and by the USPTO to process) an application. Confidentiality is governed by 35 U.S.C. 122 and 37 CFR 1.11 and 1.14. This collection is estimated to take 1 hour to complete, including gathering, preparing, and submitting the completed application form to the USPTO. Time will vary depending upon the individual case. Any comments on the amount of time you require to complete this form and/or suggestions for reducing this burden, should be sent to the Chief Information Officer, U.S. Patent and Trademark Office, U.S. Department of Commerce, P.O. Box 1450, Alexandria, VA 22313-1450. DO NOT SEND FEES OR COMPLETED FORMS TO THIS ADDRESS. **SEND TO: Commissioner for Patents, P.O. Box 1450, Alexandria, VA 22313-1450.**

If you need assistance in completing the form, call 1-800-PTO-9199 and select option 2.

PATENT

IN THE UNITED STATES PATENT AND TRADEMARK OFFICE

IN RE APPLICATION OF:	LEE LISHENG HUANG	EXAMINER:	UNASSIGNED.
APPLICATION NO.:	12/413,444	ART UNIT:	3742
FILED:	MAY 27, 2009	CONF. NO:	9056
FOR:	**METHODS OF MAKING ENERGY EFFICIENT COOKWARE**		

DECLARATION IN SUPPORT OF PETITION TO MAKE SPECIAL UNDER THE GREEN TECHNOLOGY PILOT PROGRAM

Mail Stop Petition
Commissioner for Patents
P. O. Box 1450
Alexandria, VA 22313-1450

Sir:

Applicant's representative hereby states that:

1. This application should be accorded special status under the Green Technology Pilot Program on the basis that the claimed invention materially contributes to the more efficient utilization and conservation of energy resources and, separately and alternatively, on the basis that the claimed invention materially contributes to greenhouse gas emission reduction.

2. This application meets the materiality standard at least because it discloses a method for producing highly efficient cookware having heat transfer enhancement features, such as flame guiding channels and guide fins, that significantly reduce natural gas fuel consumption and CO_2 emissions during the cooking process.

Specifically, the cookware disclosed by the application utilizes a linear pattern of parallel fins having a width and material structure calculated to provide highly efficient flame channels that absorb heat from natural gas used to prepare food. The channels are additionally designed to have low flame impedance such that heat flows freely through the flame channels to distribute heat evenly throughout the base of the cookware. Experimental results indicate that utilizing

tested embodiments manufactured by the claimed method reduced as much as 50% of the actual cooking time required by cookware not having the heat exchange flame channels described in the application. The increased heat efficiency of the cookware significantly improves natural gas utilization required for cooking and has the direct and added benefit of reducing the amount of CO_2 emitted into the atmosphere. Additionally, the cookware disclosed herein and manufactured by the claimed methods has received industry recognition and praise for its ability to reduce greenhouse gas emmissions. Therefore this application meets the materiality standards of the Green Technology Pilot Program at least because the claimed invention contributes to the efficient utilization of energy resources and, separately, contributes to the reduction of greenhouse gas emissions.

The present application is believed to be in condition for allowance, and such action is earnestly requested. Please charge Deposit Account No. 50-2207 as appropriate under Order No. 69290-8005.US01 from which the undersigned is authorized to draw.

Dated: Aug 9 2010

Respectfully submitted,

By _____

Brian Coleman
Registration No.: 39,145
PERKINS COIE LLP
P.O. Box 1208
Seattle, Washington 98111-1208
(650) 838-4300
(206) 359-9000 (Fax)
Attorney for Applicant

Customer No.: 22918

UNITED STATES PATENT AND TRADEMARK OFFICE

UNITED STATES DEPARTMENT OF COMMERCE
United States Patent and Trademark Office
Address: COMMISSIONER FOR PATENTS
P.O. Box 1450
Alexandria, Virginia 22313-1450
www.uspto.gov

APPLICATION NO.	FILING DATE	FIRST NAMED INVENTOR	ATTORNEY DOCKET NO.	CONFIRMATION NO.
12/413,444	03/27/2009	Lee Lisheng Huang	69290-8005.US01	9056

22918 7590 08/18/2010

PERKINS COIE LLP
P.O. BOX 1208
SEATTLE, WA 98111-1208

EXAMINER	
BRYANT, DAVID P	
ART UNIT	**PAPER NUMBER**
3726	

NOTIFICATION DATE	DELIVERY MODE
08/18/2010	ELECTRONIC

Please find below and/or attached an Office communication concerning this application or proceeding.

The time period for reply, if any, is set in the attached communication.

Notice of the Office communication was sent electronically on above-indicated "Notification Date" to the following e-mail address(es):

patentprocurement@perkinscoie.com

UNITED STATES PATENT AND TRADEMARK OFFICE

Commissioner for Patents
United States Patent and Trademark Office
P.O. Box 1450
Alexandria, VA 22313-1450
www.uspto.gov

PERKINS COIE LLP
P.O. BOX 1208
SEATTLE WA 98111-1208

In re Application of	:	
HUANG, LEE LISHENG	:	DECISION ON PETITION
Application No. 12/413,444	:	TO MAKE SPECIAL UNDER
Filed: March 27, 2009	:	THE GREEN TECHNOLOGY
Attorney Docket No. 69290-8005.US.01	:	PILOT PROGRAM
Title of Invention: METHODS OF MAKING ENERGY EFFICIENT COOKWARE		

This is a decision on the petition under 37 CFR 1.102, filed August 6, 2010, to make the above-identified application special under the pilot program for applications pertaining to Green Technologies as set forth in 74 Federal Register Notice 64666 (December 8, 2009) and amended by 75 Federal Register Notice 28554 (May 21, 2010).

The petition is **GRANTED**.

If reconsideration of this decision is desired, a petition for reconsideration must be filed within ONE (1) MONTH OR THIRTY (30) DAYS from the mail date of this decision, whichever is longer. No extension of this time limit can be granted under 37 CFR 1.136(a) or (b). The petition for reconsideration should include an exhaustive attempt to provide the lacking item(s) noted below, since, after a decision on the petition for reconsideration, no further reconsideration or review of the matter will be undertaken by the Director.

A grantable petition to make an application special under 37 CFR 1.102 and the pilot program as set forth in 74 FR 64666 must be directed to a nonprovisional application filed under 35 USC 111(a) or be a national stage entry under 35 USC 371, exclusive of any reissue applications and be filed prior to the date of the notice, December 8, 2009.

In order to qualify for special status, the following requirements must be met. 1) The application must have no more than 3 independent claims and no more than 20 total claims. 2) The application must not contain any multiple dependent claims. 3) The petition must state the basis for seeking special status, i.e., the claimed invention either: A) materially enhances the quality of the environment or B) materially contributes to: i) the discovery or development of renewable

energy resources, ii) the more efficient utilization and conservation of energy resources, or iii) greenhouse gas emission reduction. 4) If the disclosure is not clear on its face that the claimed invention materially contributes under category (A) or (B), the petition must be accompanied by a statement by the applicant, assignee, or an attorney/agent registered to practice before the Office explaining how the materiality standard is met. 5) A statement that applicant will agree to make an election without traverse in a telephonic interview if a restriction requirement is made by the examiner. 6) The petition to make special must be filed electronically. 7) The petition must be filed at least one day prior to the date that a first Office Action appears in the Patent Application Information Retrieval (PAIR) system. 8) The petition must be accompanied by a request for early publication in compliance with 37 CFR 1.219 and include the publication fee as set forth in 37 CFR 1.18(d).

The requirement for a fee for consideration of the petition to make special for applications pertaining to Green Technologies has been waived.

The instant petition complies with items 1 – 8 above. Accordingly, the above-identified application has been accorded "special" status.

Telephone inquires concerning this decision should be directed to Henry Yuen at 571-272-4856.

The application is being forwarded to the Technology Center Art Unit 3726 for action on the merits commensurate with this decision.

/Henry C. Yuen/

Henry C. Yuen
Quality Assurance Specialist
Technology Center 3700

UNITED STATES PATENT AND TRADEMARK OFFICE

Commissioner for Patents
United States Patent and Trademark Office
P.O. Box 1450
Alexandria, VA 22313-1450
www.uspto.gov

PATENT PREP AND PROS GROUP
SCOTT A. SCHLACK
4632 159TH ST. S.W.
LYNNWOOD WA 98087

MAILED
JAN 25 2011
OFFICE OF PETITIONS

In re Application of
Michael D. Redfern
Application No. 12/413,462
Filed: March 27, 2009
Attorney Docket No. RDRN-0001

DECISION ON PETITION
TO WITHDRAW FROM RECORD

This is a decision on the Request to Withdraw as attorney or agent of record under 37 C.F.R. § 1.36(b), filed January 10, 2011.

The request is **APPROVED**.

A grantable request to withdraw as attorney/agent of record must be signed by every attorney/agent seeking to withdraw or contain a clear indication that one attorney is signing on behalf of another/others. The Office will require the practitioner(s) to certify that he, she or they have: (1) given reasonable notice to the client, prior to the expiration of the reply period, which the practitioner(s) intends to withdraw from employment; (2) delivered to the client or a duly authorized representative of the client all papers and property (including funds) to which the client is entitled; and (3) notified the client of any replies that may be due and the time frame within which the client must respond, pursuant to 37 CFR 10.40 (c).

The request was signed by Scott A. Schlack on behalf of all attorneys of record who are associated with Customer Number 85738.

All attorneys/agents associated with the Customer Number 85738 have been withdrawn. Applicant is reminded that there is no attorney of record at this time.

All future correspondence will be directed to the applicant at the address indicated below.

Currently, there is no outstanding Office action that requires a reply.

Telephone inquiries concerning this decision should be directed to the undersigned at (571) 272-7751. All other inquires concerning either the examination or status of the application should be directed to the Technology Center.

Joan Olszewski
Petitions Examiner
Office of Petitions

cc: Michael D. Redfern
3100 West Elmore St.
Seattle, WA 98199

UNITED STATES PATENT AND TRADEMARK OFFICE

Commissioner for Patents
United States Patent and Trademark Office
P.O. Box 1450
Alexandria, VA 22313-1450
www.uspto.gov

BAKER BOTTS LLP
C/O INTELLECTUAL
PROPERTY DEPARTMENT
THE WARNER, SUITE 1300
1299 PENNSYLVANIA AVE, NW
WASHINGTON DC 20004-2400

MAILED
DEC 01 2010
OFFICE OF PETITIONS

In re Application of :
Seki :
Application No. 12/413,497 : DECISION ON PETITION
Filed: 37 March, 2009 :
Attorney Docket No. 076376.1337 :

This is a decision on the renewed petition filed on 6 July, 2010, requesting correction of the name of the inventor/applicant, and considered for relief under 37 C.F.R §1.182.

The petition under 37 C.F.R §1.182 is **DISMISSED**.

(For the second time it is noted that Petitioner did not include with the petition and fee the required declaration by the inventor/applicant, signed in both forms of the inventor/applicant's name—that averred to have been incorrect and that averred to be correct. However, it also is noted that, contrary to Petitioner's averment, the petition of 1 June, 2009, was dismissed on 29 September, 2009, not because of the absent statement but because the record already contains the marriage name of the inventor.)

Any request by Petitioner for reconsideration of this decision must be submitted within TWO (2) MONTHS from the mail date of this decision. Extensions of time under 37 C.F.R. §1.136(a) are permitted. The reconsideration request should include a cover letter entitled "Renewed Petition pursuant to 37 C.F.R. §1.182."

This is **not** a final agency action within the meaning of 5 U.S.C. §704.

The requirements of a petition such as this properly considered pursuant to Petition under 37 C.F.R. §1.182the petition are: (1) the petition, (2) the fee, (3) the required declaration by the inventor/applicant (signed in both forms of the inventor/applicant's name—that averred to have

been incorrect and that averred to be correct). If Petitioner wishes to have Office records changed to reflect only the inventor's marriage name (and not reflect also her maiden name as records now do) then the instant petition lacks item 3.

The guidance in the Commentary set forth at MPEP§605.04(c) suggests to Petitioner the proper procedure herein:

> **605.04(c)Inventor Changes Name [R-5]**
>
> In cases where an inventor's name has been changed after the application has been filed and the inventor desires to change his or her name on the application, he or she must submit a petition under 37 CFR 1.182. Applicants are also strongly encouraged to submit an application data sheet (37 CFR 1.76) showing the new name. The petition should be directed to the attention of the Office of Petitions. The petition must include an appropriate petition fee and **>a statement< signed by the inventor setting forth both names and the procedure whereby the change of name was effected, or a * copy of the court order.
>
> Since amendments are not permitted after the payment of the issue fee (37 CFR 1.312), a petition under 37 CFR 1.182 to change the name of the inventor cannot be granted if filed after the payment of the issue fee.
>
> If an application data sheet is not submitted, the petition may still be granted, but the patent may not reflect the correct spelling of the inventor's name.
>
> If the petition is granted, if the application is maintained in paper with a file jacket label (i.e., the application is an 08/ or earlier series application), the original declaration must be marked in red ink, in the left margin "See paper No. _ for correction of inventor name" and the application should be sent to the Office of Initial Patent Examination (OIPE) for change of name on the file wrapper and in the PALM database. If the petition is granted in an Image File Wrapper (IFW) application or if the application is an 09/ or later series application, the spelling of the inventor's name should be changed in the Office computer records and a new PALM bib-data sheet should be printed. If the application is assigned, applicant should submit a corrected assignment document along with a cover sheet and the recording fee as set forth in 37 CFR 1.21(h) to the Assignment Division for a change in the assignment record.

BACKGROUND

A search of the file indicates that:

The decision of 29 September, 2009, states, in pertinent part:

> The instant application was filed on 27 March, 2009, without an executed oath/declaration in the name of "Mariko (Doi) Seki"—the name having been typed and signed in that form.
>
> On 1 June, 2009, Petitioner indicated to the Office that the name of inventor/applicant should be corrected, to "Mariko (Doi) Seki" due to marriage—and at that time Petitioner submitted an executed oath/declaration in that form and from which the Office obtained the correct name of the inventor.
>
> (It is noted that Petitioner did not include with the petition and fee the required declaration by the inventor/applicant, signed in both forms of the inventor/applicant's name—that averred to have been incorrect and that averred to be correct.)

Thus, the decision of 29 September, 2009, clearly indicated that the petition was dismissed as moot in that Office records already contained the statement of the inventor's marriage name because the executed oath/declaration, submitted by Petitioner on 1 June, 2009, set forth the type-written name of the inventon with first name, maiden name and marriage name.

Should Petitioner now wish to have the record altered to delete the inventor's maiden name and limit the record to the inventor's marriage name, Petitioner must submit the statement by the inventor setting forth and signed in both maiden and marriage names, in that the inventor previously signed the oath/declaration with her maiden name included and did so without altering and initialing the oath/declaration submitted. This is the second time that the Office has set forth for Petitioner the requirements to obtain the change requested.

The availability of applications and application papers online to applicants/practitioners who diligently associate their Customer Number with the respective application(s) now provides an applicant/practitioner on-demand information as to events/transactions in an application. Thus, now if one wishes to know the progress in and/or status of an application or the accuracy of the data therein, one need only look at the file online.

Out of an abundance of caution, Petitioners always are reminded that those registered to practice *and* all others who make representations before the Office must inquire into the underlying facts

of representations made to the Office and support averments with the appropriate documentation–since all owe to the Office the continuing duty to disclose.[1]

The instant petition is **dismissed as moot** because Office records already include the inventor's marriage name.

If, Petitioner requires that the Office alter the record to delete the inventor's maiden name and limit the record to the inventor's marriage name, Petitioner must submit the required statement by the inventor setting forth and signed in both maiden and marriage names. Petitioner is reminded, it was Petitioner and not the Office that originally submitted the oath/declaration previously signed by the inventor with her maiden name included and that the inventor did so without altering and initialing the oath/declaration submitted.

In such case, further correspondence with respect to this matter should be addressed as follows:

By Mail:
Mail Stop PETITION
Commissioner for Patents
P. O. Box 1450
Alexandria, VA 22313-1450

By hand:
U. S. Patent and Trademark Office
Customer Service Window, Mail Stop Petitions
Randolph Building
401 Dulany Street
Alexandria, VA 22314

By facsimile:
(571) 273-8300
Attn: Office of Petitions

This application is released to the Office of Patent Application Processing for such remaining processing as may be required before being forwarded for substantive examination.

[1] See supplement of 17 June, 1999. The Patent and Trademark Office is relying on petitioner's duty of candor and good faith and accepting a statement made by Petitioner. See Changes to Patent Practice and Procedure, 62 Fed. Reg. at 53160 and 53178, 1203 Off. Gaz. Pat. Office at 88 and 103 (responses to comments 64 and 109)(applicant obligated under 37 C.F.R. §10.18 to inquire into the underlying facts and circumstances when providing statements to the Patent and Trademark Office). See specifically, the regulations at 37 C.F.R. §10.18.

While telephone inquiries regarding this decision may be directed to the undersigned at (571) 272-3214, it is noted that all practice before the Office is in writing (see: 37 C.F.R. §1.2[9]) and the proper authority for action on any matter in this regard are the statutes (35 U.S.C.), regulations (37 C.F.R.) and the commentary on policy (MPEP). Therefore, no telephone discussion may be controlling or considered authority for Petitioner's action(s).

/John J. Gillon, Jr./
John J. Gillon, Jr.
Senior Attorney
Office of Petitions

[9] The regulations at 37 C.F.R. §1.2 provide:

§1.2 Business to be transacted in writing.

All business with the Patent and Trademark Office should be transacted in writing. The personal attendance of applicants or their attorneys or agents at the Patent and Trademark Office is unnecessary. The action of the Patent and Trademark Office will be based exclusively on the written record in the Office. No attention will be paid to any alleged oral promise, stipulation, or understanding in relation to which there is disagreement or doubt.

UNITED STATES PATENT AND TRADEMARK OFFICE

Commissioner for Patents
United States Patent and Trademark Office
P.O. Box 1450
Alexandria, VA 22313-1450
www.uspto.gov

Thomas C. Kuracina
Suite B
404 Bryant Circle
Ojai CA 93023-4211

MAILED
FEB 28 2012
OFFICE OF PETITIONS

In re Application of :
KURACINA et al. :
Application No. 12/413,540 : DECISION ON PETITION
Filed: 03/28/2009 : UNDER 37 CFR 1.137(b)
Attorney Docket No. TNT-001CB :

This is a decision on the petition under 37 CFR 1.137(b), filed December 5, 2011, to revive the above-identified application.

The application became abandoned for failure to reply in a timely manner to the non-final Office action mailed on April 15, 2011, which set a shortened statutory period for reply of three (3) months. No extensions of time under the provisions of 37 CFR 1.136(a) were obtained. Accordingly, the application became abandoned on July 16, 2011. A Notice of Abandonment was mailed on November 8, 2011.

The petition satisfies the requirements of 37 CFR 1.137(b) in that petitioner has supplied (1) the reply in the form of amendment, (2) the petition fee, and (3) a proper statement of unintentional delay.

This application is being referred to Technology Center AU 3765 for appropriate action by the Examiner on the reply received December 5, 2011.

Telephone inquiries concerning this decision should be directed to the undersigned at (571) 272-3211.

/Christina Tartera Donnell/

Christina Tartera Donnell
Senior Petitions Attorney
Office of Petitions

UNITED STATES PATENT AND TRADEMARK OFFICE

Commissioner for Patents
United States Patent and Trademark Office
P.O. Box 1450
Alexandria, VA 22313-1450
www.uspto.gov

MITSUBISHI ELECTRIC RESEARCH LABORATORIES, INC.
201 BROADWAY
8TH FLOOR
CAMBRIDGE MA 02139

MAILED

SEP 2 8 2010

OFFICE OF PETITIONS

In re Application of	:	
Robert A. Cohen, et al.	:	
Application No. 12/413,583	:	DECISION ON PETITION
Filed: March 29, 2009	:	
Attorney Docket No. MERL-2093	:	

This is a decision on the petition under the unintentional provisions of 37 CFR 1.137(b), filed August 27, 2010, to revive the above-identified application.

The petition is **GRANTED**.

The application became abandoned for failure to reply in a timely manner to the Notice to File Missing Parts of Nonprovisional Application (Notice), mailed April 10, 2009. The Notice set a period for reply of two (2) months from the mail date of the Notice. No extensions of time under the provisions of 37 CFR 1.136(a) were obtained. Accordingly, the application became abandoned on June 11, 2009. The Notice of Abandonment was mailed on April 14, 2010.

The petition satisfies the requirements of 37 CFR 1.137(b) in that petitioner has supplied (1) the reply in the form of the excess claim(s) fee, (2) the petition fee of $1,620, and (3) a proper statement of unintentional delay.

An extension of time under 37 CFR 1.136 must be filed prior to the expiration of the maximum extendable period for reply. See In re Application of S., 8 USPQ2d 1630, 1631 (Comm'r Pats. 1988). Since the $2,350 extension of time fee submitted with the petition on August 27, 2010 was subsequent to the maximum extendable period for reply, this fee is unnecessary and will be credited to petitioner's deposit account.

Telephone inquiries concerning this decision should be directed to Terri Johnson at (571) 272-2991.

This application is being referred to the Office of Patent Application Processing for appropriate action on the reply received.

/Terri Johnson/
Terri Johnson
Petitions Examiner
Office of Petitions

UNITED STATES PATENT AND TRADEMARK OFFICE

Commissioner for Patents
United States Patent and Trademark Office
P.O. Box 1450
Alexandria, VA 22313-1450
www.uspto.gov

MITSUBISHI ELECTRIC RESEARCH LABORATORIES, INC.
201 BROADWAY
8TH FLOOR
CAMBRIDGE, MA 02139

MAILED
NOV 05 2010
OFFICE OF PETITIONS

In re Application of :
Bhisksha Raj Ramakrishnan, et al. :
Application No. 12/413,585 : ON PETITION
Filed: March 29, 2009 :
Attorney Docket No. MERL-2095 :

This is a decision on the petition under the unintentional provisions of 37 CFR 1.137(b), filed October 1, 2010, to revive the above-identified application.

The petition is **DISMISSED**.

The application became abandoned for failure to reply in a timely manner to the Notice of Incomplete Reply (Notice), mailed August 12, 2009. The Notice set a period for reply of two (2) months from the mail date of the Notice. A two (2) month extension of time under the provisions of 37 CFR 1.136(a) was obtained. Accordingly, the application became abandoned on August 11, 2009.

A grantable petition under 37 CFR 1.137(b) must be accompanied by: (1) the required reply, unless previously filed; (2) the petition fee as set forth in 37 CFR 1.17(m); (3) a statement that the entire delay in filing the required reply from the due date for the reply until the filing of a grantable petition pursuant to 37 CFR 1.137(b) was unintentional; and (4) any terminal disclaimer (and fee as set forth in 37 CFR 1.20(d)) required by 37 CFR 1.137(d). Where there is a question as to whether either the abandonment or the delay in filing a petition under 37 CFR 1.137 was unintentional, the Director may require additional information. See MPEP 711.03(c)(II)(C) and (D). The instant petition lacks item(s) (3).

The statement of delay is not acceptable. In this regard, petitioner's attention is directed to 37 CFR 1.33(b), which states.

(b) Amendments and other papers. Amendments and other papers, except for written assertions pursuant to § 1.27(c)(2)(ii) of this part, filed in the application must be signed by:

(1) A registered patent attorney or patent agent of record appointed in compliance with § 1.32(b);

(2) A registered patent attorney or patent agent not of record who acts in a representative capacity under the provisions of § 1.34;

(3) An assignee as provided for under §3.71(b) of this chapter; or

(4) All of the applicants (§ 1.41(b)) for patent, unless there is an assignee of the entire interest and such assignee has taken action in the application in accordance with § 3.71 of this chapter.

An unsigned amendment (or other paper) or one not properly signed by a person having authority to prosecute the application is not entered. This applies, for instance, where the amendment (or other paper) is signed by only one of two applicants and the one signing has not been given a power of attorney by the other applicant.

Therefore, as the petition is not signed by the attorney of record or all the inventors or that he is an assignee of the entire interest and has complied with the provisions of 37 CFR 3.73(b), the petition is considered to not contain a proper statement of unintentional delay.

Any request for reconsideration of this decision must be submitted within **TWO (2) MONTHS** from the mail date of this decision. Extensions of time under 37 CFR 1.136(a) are permitted. The reconsideration request should include a cover letter entitled "Renewed Petition under 37 CFR 1.137(b)." This is **not** a final agency action within the meaning of 5 U.S.C. § 704.

Further correspondence with respect to this matter should be addressed as follows:

By Mail:
Mail Stop PETITION
Commissioner for Patents
P. O. Box 1450
Alexandria, VA 22313-1450

By hand:
U. S. Patent and Trademark Office
Customer Service Window, Mail Stop Petitions
Randolph Building
401 Dulany Street
Alexandria, VA 22314

The centralized facsimile number is **(571) 273-8300.**

Telephone inquiries concerning this decision should be directed to the undersigned at (571) 272-1642

April M. Wise
Petitions Examiner
Office of Petitions

UNITED STATES PATENT AND TRADEMARK OFFICE

Commissioner for Patents
United States Patent and Trademark Office
P.O. Box 1450
Alexandria, VA 22313-1450
www.uspto.gov

MAILED

FEB 15 2011

OFFICE OF PETITIONS

MITSUBISHI ELECTRIC RESEARCH LABORATORIES, INC
201 BROADWAY
8TH FLOOR
CAMBRIDGE, MA 02139

In re Application of :
Bhisksha Raj Ramakrishnan, et al. :
Application No. 12/413,585 : DECISION ON PETITION
Filed: March 29, 2009 :
Attorney Docket No. MERL-2095 :

This is a decision on the renewed petition under the unintentional provisions of 37 CFR 1.137(b), filed January 5, 2011, to revive the above-identified application.

The application became abandoned for failure to reply in a timely manner to the Notice of Incomplete Reply (Notice), mailed August 12, 2009. The Notice set a period for reply of two (2) months from the mail date of the Notice. A two (2) month extension of time under the provisions of 37 CFR 1.136(a) was obtained. Accordingly, the application became abandoned on August 11, 2009.

The petition satisfies the requirements of 37 CFR 1.137(b) in that petitioner has supplied (1) the reply in the form of a reply, (2) the petition fee of $1620, and (3) a proper statement of unintentional delay.

In view of the above, the petition is **GRANTED**.

An extension of time under 37 CFR 1.136 must be filed prior to the expiration of the maximum extendable period for reply. See In re Application of S., 8 USPQ2d 1630, 1631 (Comm'r Pats. 1988). Since the $1860 extension of time fee submitted with the petition on October 1, 2010 was subsequent to the maximum extendable period for reply, this fee is unnecessary and will be credited to petitioner's deposit account.

Telephone inquiries concerning this decision should be directed to undersigned at (571) 272-1642. All other inquiries concerning the examination or status of this application should be directed to the Office of Patent Application Processing at their hotline 571-272-4000.

This application is being referred to the Office of Patent Application Processing for pre-examination processing of the reply received October 1, 2010.

April M. Wise
Petition Examiner
Office of Petitions

Doc Code: PET.AUTO Document Description: Petition automatically granted by EFS-Web	PTO/SB/140 U.S. Patent and Trademark Office Department of Commerce

Electronic Petition Request	**PETITION TO WITHDRAW AN APPLICATION FROM ISSUE AFTER PAYMENT OF THE ISSUE FEE UNDER 37 CFR 1.313(c)**
Application Number	12413588
Filing Date	29-Mar-2009
First Named Inventor	Tung-Hsin Lan
Art Unit	2629
Examiner Name	NITIN PATEL
Attorney Docket Number	CPTP0134USA
Title	LIQUID CRYSTAL DISPLAYS CAPABLE OF INCREASING CHARGE TIME AND METHODS OF DRIVING THE SAME

An application may be withdrawn from issue for further action upon petition by the applicant. To request that the Office withdraw an application from issue, applicant must file a petition under this section including the fee set forth in § 1.17(h) and a showing of good and sufficient reasons why withdrawal of the application from issue is necessary.

APPLICANT HEREBY PETITIONS TO WITHDRAW THIS APPLICATION FROM ISSUE UNDER 37 CFR 1.313(c).

A grantable petition requires the following items:
(1) Petition fee; and
(2) One of the following reasons:
(a) Unpatentability of one or more claims, which must be accompanied by an unequivocal statement that one or more claims are unpatentable, an amendment to such claim or claims, and an explanation as to how the amendment causes such claim or claims to be patentable;
(b) Consideration of a request for continued examination in compliance with § 1.114 (for a utility or plant application only); or
(c) Express abandonment of the application. Such express abandonment may be in favor of a continuing application, but not a CPA under 37 CFR 1.53(d).

Petition Fee

☐ Applicant claims SMALL ENTITY status. See 37 CFR 1.27.

☐ Applicant is no longer claiming SMALL ENTITY status. See 37 CFR 1.27(g)(2).

☐ Applicant(s) status remains as SMALL ENTITY.

☒ Applicant(s) status remains as other than SMALL ENTITY

Reason for withdrawal from issue

◯ One or more claims are unpatentable ◉ Consideration of a request for continued examination (RCE) (List of Required Documents and Fees) ◯ Applicant hereby expressly abandons the instant application (any attorney/agent signing for this reason must have power of attorney pursuant to 37 CFR 1.32(b)).
RCE request,submission, and fee. ☐ I certify, in accordance with 37 CFR 1.4(d)(4) that : The RCE request ,submission, and fee have already been filed in the above-identified application on ☒ Are attached.
THIS PORTION MUST BE COMPLETED BY THE SIGNATORY OR SIGNATORIES I certify, in accordance with 37 CFR 1.4(d)(4) that I am: ◉ An attorney or agent registered to practice before the Patent and Trademark Office who has been given power of attorney in this application. ◯ An attorney or agent registered to practice before the Patent and Trademark Office, acting in a representative capacity. ◯ A sole inventor ◯ A joint inventor; I certify that I am authorized to sign this submission on behalf of all of the inventors ◯ A joint inventor; all of whom are signing this e-petition ◯ The assignee of record of the entire interest that has properly made itself of record pursuant to 37 CFR 3.71

Signature	/Winston Hsu/
Name	Winston Hsu
Registration Number	41526

UNITED STATES PATENT AND TRADEMARK OFFICE

Commissioner for Patents
United States Patent and Trademark Office
P.O. Box 1450
Alexandria, VA 22313-1450
www.uspto.gov

Decision Date : December 8, 2011

In re Application of :

Tung-Hsin Lan

DECISION ON PETITION

UNDER CFR 1.313(c)(2)

Application No : 12413588

Filed : 29-Mar-2009

Attorney Docket No : CPTP0134USA

This is an electronic decision on the petition under 37 CFR 1.313(c)(2), filed December 8, 2011, to withdraw the above-identified application from issue after payment of the issue fee.

The petition is **GRANTED.**

The above-identified application is withdrawn from issue for consideration of a submission under 37 CFR 1.114 (request for continued examination). See 37 CFR 1.313(c)(2).

Petitioner is advised that the issue fee paid in this application cannot be refunded. If, however, this application is again allowed, petitioner may request that it be applied towards the issue fee required by the new Notice of Allowance.

Telephone inquiries concerning this decision should be directed to the Patent Electronic Business Center (EBC) at 866-217-9197.

This application file is being referred to Technology Center AU 2629 for processing of the request for continuing examination under 37 CFR 1.114 .

Office of Petitions

UNITED STATES PATENT AND TRADEMARK OFFICE

Commissioner for Patents
United States Patent and Trademark Office
P.O. Box 1450
Alexandria, VA 22313-1450
www.uspto.gov

MAIL

NOV 17 2010

DIRECTOR'S OFFICE
TECHNOLOGY CENTER 2600

GIFFORD, KRASS, SPRINKLE,ANDERSON & CITKOWSKI, P.C
PO BOX 7021
TROY MI 48007-7021

In re Application of	:	
SHIMIZU, HIROAKI	:	DECISION ON REQUEST TO
Application No. 12/413,659	:	PARTICIPATE IN PATENT
Filed: March 30, 2009	:	PROSECUTION HIGHWAY
Attorney Docket No. TMCT-12102/08	:	PROGRAM AND PETITION
	:	TO MAKE SPECIAL UNDER
	:	37 CFR 1.102(d)

This is a decision on the request to participate in the Patent Prosecution Highway (PPH) program and the petition under 37 CFR 1.102(d), filed October 22, 2010, to make the above-identified application special.

The request and petition are **DISMISSED**.

A grantable request to participate in the PPH program and petition to make special require:

(1) The U.S. application must validly claim priority under 35 U.S.C. 119(a) to one or more applications filed in the JPO;
(2) Applicant must submit a copy of the allowable/patentable claim(s) from the JPO application(s) along with an English translation thereof and a statement that the English translation is accurate;
(3) All the claims in the U.S. application must sufficiently correspond or be amended to sufficiently correspond to the allowable/patentable claim(s) in the JPO application(s);
(4) Examination of the U.S. application has not begun;
(5) Applicant must submit a copy of all the office actions from each of the JPO application(s) containing the allowable/patentable claim(s) along with an English translation thereof and a statement that the English translation is accurate; and
(6) Applicant must submit an IDS listing the documents cited by the JPO examiner in the JPO office action along with copies of documents except U.S. patents or U.S. patent application publications.

The request to participate in the PPH program and petition is deficient as follows:

Petitioner has not complied with item 6 above.

Regarding item 6, while applicants have submitted IDS's listing documents cited by JPO examiner in the JPO office action along with copies of the documents, not all documents have been listed. The submitted IDS's failed to include the document "Japanese Patent Application Publication No. 2007-140674" (document JP 2007-140647 was cited instead) which was also cited by the JPO examiner in the JPO office action. An IDS listing the document JP 2007-140674 is required. It is noted a copy of the document JP 2007-140674 has been filed.

Applicant is given a time period of **ONE MONTH or THIRTY DAYS**, whichever is longer, from the mailing date of this decision to correct the deficiencies. **NO EXTENSION OF TIME UNDER 37 CFR 1.136 IS PERMITTED.** If the deficiencies are not corrected with the time period given, the application will await action in its regular turn.

Telephone inquiries concerning this decision should be directed to Michael Horabik at 571-272-3068.

All other inquiries concerning the examination or status of the application should be directed to Patent Application Information Retrieval (PAIR) system.

/Michael Horabik/

Michael Horabik
Quality Assurance Specialist
Technology Center 2600
Communications

UNITED STATES PATENT AND TRADEMARK OFFICE

UNITED STATES DEPARTMENT OF COMMERCE
United States Patent and Trademark Office
Address: COMMISSIONER FOR PATENTS
P.O. Box 1450
Alexandria, Virginia 22313-1450
www.uspto.gov

APPLICATION NO.	FILING DATE	FIRST NAMED INVENTOR	ATTORNEY DOCKET NO.	CONFIRMATION NO.
12/413,659	03/30/2009	Hiroaki Shimizu	TMCT-12102/08	9557

25006 7590 12/14/2010

GIFFORD, KRASS, SPRINKLE,ANDERSON & CITKOWSKI, P.C
PO BOX 7021
TROY, MI 48007-7021

EXAMINER	
BELLA, MATTHEW C	
ART UNIT	PAPER NUMBER
2624	

MAIL DATE	DELIVERY MODE
12/14/2010	PAPER

Please find below and/or attached an Office communication concerning this application or proceeding.

The time period for reply, if any, is set in the attached communication.

UNITED STATES PATENT AND TRADEMARK OFFICE

Commissioner for Patents
United States Patent and Trademark Office
P.O. Box 1450
Alexandria, VA 22313-1450
www.uspto.gov

MAIL

DEC 14 2010

DIRECTOR'S OFFICE
TECHNOLOGY CENTER 2600

GIFFORD, KRASS, SPRINKLE,ANDERSON & CITKOWSKI, P.C
PO BOX 7021
TROY MI 48007-7021

In re Application of	:	
SHIMIZU, HIROAKI	:	DECISION ON REQUEST TO
Application No. 12/413,659	:	PARTICIPATE IN PATENT
Filed: March 03, 2009	:	PROSECUTION HIGHWAY
Attorney Docket No. TMCT-12102/08	:	PROGRAM AND PETITION
	:	TO MAKE SPECIAL UNDER
	:	37 CFR 1.102(a)

This is a decision on the renewed request to participate in the Patent Prosecution Highway (PPH) program and the petition under 37 CFR 1.102(a), filed November 22, 2010 to make the above-identified application special.

The request and petition are **GRANTED**.

A grantable request to participate in the PPH program and petition to make special require:

(1) The U.S. application must validly claim priority under 35 U.S.C. 119(a) to one or more applications filed in the JPO;
(2) Applicant must submit a copy of the allowable/patentable claim(s) from the JPO application(s) along with an English translation thereof and a statement that the English translation is accurate;
(3) All the claims in the U.S. application must sufficiently correspond or be amended to sufficiently correspond to the allowable/patentable claim(s) in the JPO application(s);
(4) Examination of the U.S. application has not begun;
(5) Applicant must submit a copy of all the office actions from each of the JPO application(s) containing the allowable/patentable claim(s) along with an English translation thereof and a statement that the English translation is accurate; and
(6) Applicant must submit an IDS listing the documents cited by the JPO examiner in the JPO office action along with copies of documents except U.S. patents or U.S. patent application publications.

The request to participate in the PPH program and petition now comply with the above requirements. Accordingly, the above-identified application has been accorded "special" status.

Telephone inquiries concerning this decision should be directed to Michael Horabik at 571-272-3068.

All other inquiries concerning the examination or status of the application should be directed to Patent Application Information Retrieval (PAIR) system.

The application is being forwarded to the examiner for action on the merits commensurate with this decision.

/Michael Horabik/

Michael Horabik
Quality Assurance Specialist
Technology Center 2600
Communications

UNITED STATES PATENT AND TRADEMARK OFFICE

UNITED STATES DEPARTMENT OF COMMERCE
United States Patent and Trademark Office
Address: COMMISSIONER FOR PATENTS
P.O. Box 1450
Alexandria, Virginia 22313-1450
www.uspto.gov

APPLICATION NO.	FILING DATE	FIRST NAMED INVENTOR	ATTORNEY DOCKET NO.	CONFIRMATION NO.
12/413,691	03/30/2009	Daizen Kobayashi	340370US8	9618

7590 09/08/2010

OBLON, SPIVAK, MCCLELLAND MAIER & NEUSTADT, L.L.P.
1940 DUKE STREET
ALEXANDRIA, VA 22314

EXAMINER	
YE, LIN	

ART UNIT	PAPER NUMBER
2622	

NOTIFICATION DATE	DELIVERY MODE
09/08/2010	ELECTRONIC

DECISION GRANTING PETITION UNDER 37 CFR 1.138(d)

The declaration of express abandonment is recognized

This is in response to the petition under 37 CFR 1.138(d), requesting for a refund of any previously paid search fee and excess claims fee in the above-identified application.

The petition is granted.

The express abandonment is recognized. Any previously paid search fee and excess claims fee are hereby refunded.

Telephone inquiries should be directed to the Office of Data Management at (571) 272-4200.

Patent Publication Branch
Office of Data Management

[illegible]

[illegible]

[illegible]

Doc Code: PET.AUTO Document Description: Petition automatically granted by EFS-Web	PTO/SB/64 U.S. Patent and Trademark Office Department of Commerce

Electronic Petition Request	PETITION FOR REVIVAL OF AN APPLICATION FOR PATENT ABANDONED UNINTENTIONALLY UNDER 37 CFR 1.137(b)
Application Number	12413734
Filing Date	30-Mar-2009
First Named Inventor	Anthony Skinner
Art Unit	3641
Examiner Name	BRET HAYES
Attorney Docket Number	LMM-60354-D1
Title	THERMALLY INITIATED VENTING SYSTEM AND METHOD OF USING SAME

The above-identified application became abandoned for failure to file a timely and proper reply to a notice or action by the United States Patent and Trademark Office. The date of abandonment is the day after the expiration date of the period set for reply in the office notice or action plus any extensions of time actually obtained.

APPLICANT HEREBY PETITIONS FOR REVIVAL OF THIS APPLICATION

NOTE: A grantable petition requires the following items:
(1) Petition fee;
(2) Reply and/or issue fee;
(3) Terminal disclaimer with disclaimer fee – required for all utility and plant applications filed before June 8, 1995; and for all design applications;
(4) Statement that the entire delay was unintentional.

Petition fee
The petition fee under 37CFR 1.17(m) is attached.

☐ Applicant claims SMALL ENTITY status. See 37 CFR 1.27.

☐ Applicant is no longer claiming SMALL ENTITY status. See 37 CFR 1.27(g)(2).

☐ Applicant(s) status remains as SMALL ENTITY.

☒ Applicant(s) status remains as other than SMALL ENTITY.

Issue Fee and Publication Fee :

Issue Fee and Publication Fee must accompany ePetition.

☒ Issue Fee Transmittal is attached

Drawing corrections and/ or other deficiencies.

◉ Drawing corrections and/ or other deficiencies are not required

○ I certify, in accordance with 37 CFR 1.4.(D)(4), that drawing corrections and/ or other deficiencies have previously been filed on

○ Drawing corrections and/ or other deficiencies are attached.

☒ STATEMENT: The entire delay in filing the required reply from the due date for the required reply until the filing of a grantable petition under 37 CFR 1.137(b) was unintentional.

THIS PORTION MUST BE COMPLETED BY THE SIGNATORY OR SIGNATORIES

I certify, in accordance with 37 CFR 1.4(d)(4) that I am:

◉ An attorney or agent registered to practice before the Patent and Trademark Office who has been given power of attorney in this application.

○ An attorney or agent registered to practice before the Patent and Trademark Office, acting in a representative capacity.

○ A sole inventor

○ A joint inventor; I certify that I am authorized to sign this submission on behalf of all of the inventors.

○ A joint inventor; all of whom are signing this e-petition.

○ The assignee of record of the entire interest that has properly made itself of record pursuant to 37 CFR 3.71.

Signature	/Steven H. Slater/
Name	Steven H. Slater
Registration Number	35361

UNITED STATES PATENT AND TRADEMARK OFFICE

Commissioner for Patents
United States Patent and Trademark Office
P.O. Box 1450
Alexandria, VA 22313-1450
www.uspto.gov

Decision Date : February 7, 2012

In re Application of :

Anthony Skinner

Application No : 12413734

Filed : 30-Mar-2009

Attorney Docket No : LMM-60354-D1

DECISION ON PETITION

UNDER CFR 1.137(b)

This is an electronic decision on the petition under 37 CFR 1.137(b), filed February 7, 2012 , to revive the above-identified application.

The petition is **GRANTED.**

The above-identified application became abandoned for failure to reply in a timely manner to the Notice of Allowance and Issue Fee(s) Due. The date of abandonment is the day after the expiration date of the period set for reply in the Notice.

The electronic petition satisfies the conditions for revival pursuant to the provisions of 37 CFR 1.137(b) in that (1) the reply in the form of payment of the Issue Fee and the Publication Fee (if necessary); (2) the petition fee as set forth in 37 CFR 1.17 (m); (3) the drawing correction and/or other deficiencies (if necessary); and (4) the required statement of unintentional delay have been received. Accordingly, the Issue Fee payment is accepted as having been unintentionally delayed.

Telephone inquiries concerning this decision should be directed to the Patent Electronic Business Center (EBC) at 866-217-9197.

This application file is being directed to the Office of Data Management.

Office of Petitions

UNITED STATES PATENT AND TRADEMARK OFFICE

Commissioner for Patents
United States Patent and Trademark Office
P.O. Box 1450
Alexandria, VA 22313-1450
www.uspto.gov

MAILED

DEC 12 2011

OFFICE OF PETITIONS

GEORGE R CORRIGAN
CORRIGAN LAW OFFICE
2168 COLLADAY POINT DRIVE
STOUGHTON WI 53589

In re Application of :
Selle, et al. : DECISION ON PETITION
Application No. 12/413,737 :
Filed: March 30, 2009 :
Atty. Dkt. No.: CMD 222C :

This is a decision on the renewed petition under 37 CFR 1.137(b), filed November 28, 2011, to revive the above-identified application.

The petition is **DISMISSED**.

Any request for reconsideration of this matter must be submitted within TWO MONTHS of the mailed date indicated above. The period of time for seeking reconsideration is subject to extension of time pursuant to 37 CFR 1.136(a). The request should be entitled "Request for Reconsideration under 37 CFR 1.137(b)."

This application became abandoned April 10, 2011 for failure to timely submit a proper reply to the restriction requirement mailed March 9, 2011. The restriction requirement set a one month shortened statutory period of time for reply. Notice of Abandonment was mailed September 26, 2011.

A grantable petition under 37 CFR 1.137(b) must be accompanied by: (1) the required reply, unless previously filed; (2) the petition fee as set forth in 37 CFR 1.17(m); (3) a statement that the entire delay in filing the required reply from the due date for the reply until the filing of a grantable petition pursuant to 37 CFR 1.137(b) was unintentional; and (4) any terminal disclaimer (and fee as set forth in 37 CFR 1.20(d)) required by 37 CFR 1.137(d). Where there is a question as to whether either the abandonment or the delay in filing a petition under 37 CFR 1.137 was unintentional, the Director may require additional information. See MPEP 711.03(c)(II)(C) and (D).

As to item (1), a proper reply to the outstanding Office communication has not been submitted. The reply submitted September 12, 2011 is not acceptable as it is not properly signed within the meaning of 37 CFR 1.4(d)(2)(i) and 1.33(b) in that the S-signature contains back slashes instead of forward slashes.

Any request for reconsideration must be accompanied by a proper reply to the restriction requirement.

Further correspondence with respect to this matter should be addressed as follows:

By Mail: Mail Stop PETITION
Commissioner for Patents
P. O. Box 1450
Alexandria, VA 22313-1450

By hand: U. S. Patent and Trademark Office
Customer Service Window, Mail Stop Petitions
Randolph Building
401 Dulany Street
Alexandria, VA 22314

The centralized facsimile number is **(571) 273-8300.**

Telephone inquiries concerning this decision should be directed to the undersigned at (571) 272-3205.

/ALESIA M. BROWN/

Alesia M. Brown
Attorney Advisor
Office of Petitions

UNITED STATES PATENT AND TRADEMARK OFFICE

Commissioner for Patents
United States Patent and Trademark Office
P.O. Box 1450
Alexandria, VA 22313-1450
www.uspto.gov

MAILED
MAR 06 2012
OFFICE OF PETITIONS

GEORGE R CORRIGAN
CORRIGAN LAW OFFICE
2168 COLLADAY POINT DRIVE
STOUGHTON WI 53589

In re Application of :
Selle, et al. : DECISION ON PETITION
Application No. 12/413,737 :
Filed: March 30, 2009 :
Atty. Dkt. No.: CMD 222C :

This is a decision on the renewed petition under 37 CFR 1.137(b), filed February 13, 2012, to revive the above-identified application.

The petition is **GRANTED**.

This application became abandoned April 10, 2011 for failure to timely submit a proper reply to the restriction requirement mailed March 9, 2011. The restriction requirement set a one month shortened statutory period of time for reply. Notice of Abandonment was mailed September 26, 2011.

A grantable petition under 37 CFR 1.137(b) must be accompanied by: (1) the required reply, unless previously filed; (2) the petition fee as set forth in 37 CFR 1.17(m); (3) a statement that the entire delay in filing the required reply from the due date for the reply until the filing of a grantable petition pursuant to 37 CFR 1.137(b) was unintentional; and (4) any terminal disclaimer (and fee as set forth in 37 CFR 1.20(d)) required by 37 CFR 1.137(d). Where there is a question as to whether either the abandonment or the delay in filing a petition under 37 CFR 1.137 was unintentional, the Director may require additional information. See MPEP 711.03(c)(II)(C) and (D).

The above-identified application has been carefully reviewed and found in compliance with the requirements set forth herein.

Thus, this application is being directed to Group Art Unit 3721 for further processing.

Telephone inquiries concerning this decision should be directed to the undersigned at (571) 272-3205.

/ALESIA M. BROWN/

Alesia M. Brown
Attorney Advisor
Office of Petitions

UNITED STATES PATENT AND TRADEMARK OFFICE

UNITED STATES DEPARTMENT OF COMMERCE
United States Patent and Trademark Office
Address: COMMISSIONER FOR PATENTS
P.O. Box 1450
Alexandria, Virginia 22313-1450
www.uspto.gov

APPLICATION NO.	FILING DATE	FIRST NAMED INVENTOR	ATTORNEY DOCKET NO.	CONFIRMATION NO.
12/413,850	03/30/2009	Robert P. Morris	I550/US	9915

49277 7590 06/01/2011

SCENERA RESEARCH, LLC
5400 Trinity Road
Suite 303
Raleigh, NC 27607

EXAMINER	
BIBLE, SONYA	

ART UNIT	PAPER NUMBER
3672	

MAIL DATE	DELIVERY MODE
06/01/2011	PAPER

Please find below and/or attached an Office communication concerning this application or proceeding.

The time period for reply, if any, is set in the attached communication.

UNITED STATES PATENT AND TRADEMARK OFFICE

Commissioner for Patents
United States Patent and Trademark Office
P.O. Box 1450
Alexandria, VA 22313-1450
www.uspto.gov

JUN - 1 2011

Scenera Research, LLC
5400 Trinty Road
Suite 303
Raleigh, NC 27607

In re application of	:	**DECISION ON PETITION**
Robert P. Morris	:	**FOR SECOND SUSPENSION**
Application No. 12/413,850	:	**OF ACTION UNDER**
Filed: March 30, 2009	:	**37 CFR 1.103 (a)**
For: METHODS, SYSTEMS, AND COMPUTER PROGRAM PRODUCTS FOR PROVIDING ACCESS TO METADATA FOR AN IDENTIFIED RESOURCE		

This letter is responsive to the petition for a suspension of action under 37 CFR 1.103(a) received on April 15, 2011.

The petition for suspension of action under 37 CFR 1.103(a) is **GRANTED**.

A grantable petition for suspension of action under 37 CFR 1.103(a) requires:

1) A showing of good and sufficient cause for suspension of action, and
2) The fee set forth in 37 CFR 1.17(g), unless such cause is the fault of the Office.

Applicant filed a petition on November 2, 2010 to request a 6 month suspension due to the fact that applicant's ownership has been challenged in a legal action. The suspension request was made "to allow time for the court to consider the Petitioner's declaratory judgment claim".

There being ongoing litigation to decide the petitioner's ownership of the subject matter of this application, it is deemed that this constitutes a good and sufficient reason why a second suspension should be granted, and thus applicants' request for an additional period of suspension is reasonable and will be **GRANTED**. However, in order to correspond with other requests for suspension filed in other applications by this applicant on similar grounds, the request is granted for a period of three (3) months.

Action by the Office on this application is suspended under 37 CFR 1.103(a) for a period of three (3) months from the date of this letter. At the end of this period applicant

is required to notify the examiner and request commencement of prosecution or a further suspension. See MPEP 709. If applicant wishes to commence prosecution earlier than the expiration of the 3 month period, the examiner should be so notified.

Suspension of action under 37 CFR § 1.103(a)-(d) at the applicant's request will cause a reduction in patent term adjustment accumulated (if any) under 37 CFR § 1.703. The reduction is equal to the number of days beginning on the date a request for suspension of action was filed and ending on the date of the termination of the suspension. See 37 CFR § 1.704(c)(1).

The period for suspension will be three (3) months from the date of this letter.

Any questions surrounding this decision should be directed to Quality Assurance Specialist Steven Meyers at (571) 272-6611.

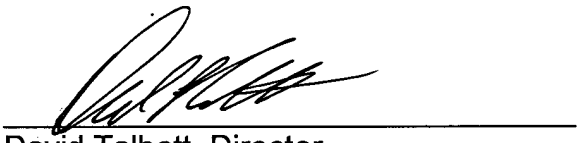

David Talbott, Director
Technology Center 3600
(571) 272-5150

snm: 5/16/11

UNITED STATES PATENT AND TRADEMARK OFFICE

UNITED STATES DEPARTMENT OF COMMERCE
United States Patent and Trademark Office
Address: COMMISSIONER FOR PATENTS
P.O. Box 1450
Alexandria, Virginia 22313-1450
www.uspto.gov

APPLICATION NO.	FILING DATE	FIRST NAMED INVENTOR	ATTORNEY DOCKET NO.	CONFIRMATION NO.
12/413,850	03/30/2009	Robert P. Morris	I550/US	9915

49277 7590 09/13/2011

SCENERA RESEARCH, LLC
5400 Trinity Road
Suite 303
Raleigh, NC 27607

EXAMINER	
ENGELSKIRCHEN, JEREMY D	
ART UNIT	PAPER NUMBER
2157	

MAIL DATE	DELIVERY MODE
09/13/2011	PAPER

Please find below and/or attached an Office communication concerning this application or proceeding.

The time period for reply, if any, is set in the attached communication.

UNITED STATES PATENT AND TRADEMARK OFFICE

Commissioner for Patents
United States Patent and Trademark Office
P.O. Box 1450
Alexandria, VA 22313-1450
www.uspto.gov

Kevin L. Wingate
SCENERA RESEARCH, LLC
5400 Trinity Road
Suite 303
Raleigh, North Carolina 27607

In re Application of:
Robert P. MORRIS
Appl. No.: 12/413,850
Filed: March 30, 2009
For: METHODS, SYSTEMS, AND COMPUTER PROGRAM PRODUCTS FOR PROVIDING ACCESS TO METADATA FOR AN IDENTIFIED RESOURCE

DECISION ON PETITION UNDER 37 CFR § 1.103(a)

This is a decision on the petition for suspension of prosecutions under 37 CFR § 1.103(a) filed on 12 September 2011.

The petition is **GRANTED**.

Pursuant to applicant's requests filed on 12 September 2011, action by the Office is suspended on this application under 37 CFR § 1.103(a) for a period of ***three (3) months from the mailing date of this letter***. At the end of this period, applicant is required to notify the examiner and request continuance of prosecution or a further suspension. See MPEP § 709.

Suspension of action under 37 CFR § 1.103(a)-(d) at the applicant's request will cause a reduction in patent term adjustment accumulated (if any) under 37 CFR § 1.703. The reduction is equal to the number of days beginning on the date a request for suspension of action was filed and ending on the date of the termination of the suspension. See 37 CFR § 1.704(c)(1).

Any inquiry concerning this decision should be directed to the undersigned whose telephone number is (571) 272-3613.

/Vincent N. Trans/
Vincent N. Trans, SPRE/QAS
Technology Center 2100
Computer Architecture and Software

UNITED STATES PATENT AND TRADEMARK OFFICE

UNITED STATES DEPARTMENT OF COMMERCE
United States Patent and Trademark Office
Address: COMMISSIONER FOR PATENTS
P.O. Box 1450
Alexandria, Virginia 22313-1450
www.uspto.gov

APPLICATION NO.	FILING DATE	FIRST NAMED INVENTOR	ATTORNEY DOCKET NO.	CONFIRMATION NO.
12/413,850	03/30/2009	Robert P. Morris	I550/US	9915

49277 7590 12/22/2011
SCENERA RESEARCH, LLC
5400 Trinity Road
Suite 303
Raleigh, NC 27607

EXAMINER	
ENGELSKIRCHEN, JEREMY D	

ART UNIT	PAPER NUMBER
2157	

MAIL DATE	DELIVERY MODE
12/22/2011	PAPER

Please find below and/or attached an Office communication concerning this application or proceeding.

The time period for reply, if any, is set in the attached communication.

UNITED STATES PATENT AND TRADEMARK OFFICE

Commissioner for Patents
United States Patent and Trademark Office
P.O. Box 1450
Alexandria, VA 22313-1450
www.uspto.gov

Kevin L. Wingate
SCENERA RESEARCH, LLC
5400 Trinity Road
Suite 303
Raleigh, North Carolina 27607

In re Application of:
Robert P. MORRIS
Appl. No.: 12/413,850
Filed: March 30, 2009
For: METHODS, SYSTEMS, AND COMPUTER PROGRAM PRODUCTS FOR PROVIDING ACCESS TO METADATA FOR AN IDENTIFIED RESOURCE

DECISION ON PETITION UNDER 37 CFR § 1.103(a)

This is a decision on the petition for suspension of prosecutions under 37 CFR § 1.103(a) filed on 16 December 2011.

The petition is **GRANTED**.

Pursuant to applicant's requests filed on 16 December 2011, action by the Office is suspended on this application under 37 CFR § 1.103(a) for a period of ***three (3) months from the mailing date of this letter***. At the end of this period, applicant is required to notify the examiner and request continuance of prosecution or a further suspension. See MPEP § 709.

Suspension of action under 37 CFR § 1.103(a)-(d) at the applicant's request will cause a reduction in patent term adjustment accumulated (if any) under 37 CFR § 1.703. The reduction is equal to the number of days beginning on the date a request for suspension of action was filed and ending on the date of the termination of the suspension. See 37 CFR § 1.704(c)(1).

Any inquiry concerning this decision should be directed to the undersigned whose telephone number is (571) 272-3613.

/Vincent N. Trans/
Vincent N. Trans, SPRE/QAS
Technology Center 2100
Computer Architecture and Software

UNITED STATES PATENT AND TRADEMARK OFFICE

UNITED STATES DEPARTMENT OF COMMERCE
United States Patent and Trademark Office
Address: COMMISSIONER FOR PATENTS
P.O. Box 1450
Alexandria, Virginia 22313-1450
www.uspto.gov

APPLICATION NO.	FILING DATE	FIRST NAMED INVENTOR	ATTORNEY DOCKET NO.	CONFIRMATION NO.
12/413,850	03/30/2009	Robert P. Morris	1550/US	9915

49277 7590 03/29/2012

SCENERA RESEARCH, LLC
5400 Trinity Road
Suite 303
Raleigh, NC 27607

EXAMINER	
KIM, CHONG R	

ART UNIT	PAPER NUMBER
2157	

MAIL DATE	DELIVERY MODE
03/29/2012	PAPER

Please find below and/or attached an Office communication concerning this application or proceeding.

The time period for reply, if any, is set in the attached communication.

UNITED STATES PATENT AND TRADEMARK OFFICE

Commissioner for Patents
United States Patent and Trademark Office
P.O. Box 1450
Alexandria, VA 22313-1450
www.uspto.gov

Kevin L. Wingate
SCENERA RESEARCH, LLC
5400 Trinity Road
Suite 303
Raleigh, North Carolina 27607

In re Application of:
Robert P. MORRIS
Appl. No.: 12/413,850
Filed: March 30, 2009
For: METHODS, SYSTEMS, AND COMPUTER PROGRAM PRODUCTS FOR PROVIDING ACCESS TO METADATA FOR AN IDENTIFIED RESOURCE

DECISION ON PETITION UNDER 37 CFR § 1.103(a)

This is a decision on the petition for suspension of prosecutions under 37 CFR § 1.103(a) filed on 28 March 2012.

The petition is **GRANTED**.

Pursuant to applicant's requests filed on 28 March 2012, action by the Office is suspended on this application under 37 CFR § 1.103(a) for a period of ***three (3) months from the mailing date of this letter***. At the end of this period, applicant is required to notify the examiner and request continuance of prosecution or a further suspension. See MPEP § 709.

Suspension of action under 37 CFR § 1.103(a)-(d) at the applicant's request will cause a reduction in patent term adjustment accumulated (if any) under 37 CFR § 1.703. The reduction is equal to the number of days beginning on the date a request for suspension of action was filed and ending on the date of the termination of the suspension. See 37 CFR § 1.704(c)(1).

Any inquiry concerning this decision should be directed to the undersigned whose telephone number is (571) 272-3613.

/Vincent N. Trans/
Vincent N. Trans, SPRE/QAS
Technology Center 2100
Computer Architecture and Software

UNITED STATES PATENT AND TRADEMARK OFFICE

UNITED STATES DEPARTMENT OF COMMERCE
United States Patent and Trademark Office
Address: COMMISSIONER FOR PATENTS
P.O. Box 1450
Alexandria, Virginia 22313-1450
www.uspto.gov

APPLICATION NO.	FILING DATE	FIRST NAMED INVENTOR	ATTORNEY DOCKET NO.	CONFIRMATION NO.
12/413,855	03/30/2009	Robert P. Morris	I557/US	9931

49277 7590 09/21/2011

SCENERA RESEARCH, LLC
5400 Trinity Road
Suite 303
Raleigh, NC 27607

EXAMINER	
TANG, KAREN C	

ART UNIT	PAPER NUMBER
2447	

DATE MAILED: 09/21/2011

Please find below and/or attached an Office communication concerning this application or proceeding.

The request for deferral/suspension of action under 37 CFR 1.103 has been approved.

UNITED STATES PATENT AND TRADEMARK OFFICE

Commissioner for Patents
United States Patent and Trademark Office
P.O. Box 1450
Alexandria, VA 22313-1450
www.uspto.gov

Scenera Research, LLC
5400 Trinity Road
Suite 303
Raleigh NC 27607

In re Application of:
Morris
Appl. No.: 12/413,855
Filed: March 30, 2009
For: **METHOD AND SYSTEM FOR PROVIDING ACCESS TO METADATA OF A NETWORK ACCESSIBLE RESOURCE**

DECISION ON PETITION
UNDER 37 CFR § 1.103(a)

This is a decision on the petition for suspension of prosecution under 37 CFR § 1.103(a) filed on August 25, 2011. This is the third petition for suspension.

The petition is **GRANTED**.

Pursuant to applicant's request filed on August 25, 2011, action by the Office is suspended on this application under 37 CFR § 1.103(a) for a period of six (6) months from the mailing of this letter. At the end of this period, applicant is required to notify the examiner and request continuance of prosecution or a further suspension. See MPEP § 709.

Suspension of action under 37 CFR § 1.103(a)-(d) at the applicant's request will cause a reduction in patent term adjustment accumulated (if any) under 37 CFR § 1.703. The reduction is equal to the number of days beginning on the date a request for suspension of action was filed and ending on the date of the termination of the suspension. See 37 CFR § 1.704(c)(1).

Any inquiry concerning this decision should be directed to Christopher Grant whose telephone number is (571) 272-7294.

/Christopher Grant/
Christopher Grant, WQAS
Technology Center 2400

UNITED STATES PATENT AND TRADEMARK OFFICE

Commissioner for Patents
United States Patent and Trademark Office
P.O. Box 1450
Alexandria, VA 22313-1450
www.uspto.gov

YOUNG & THOMPSON
209 MADISON STREET, SUITE 500
ALEXANDRIA, VA 22314

MAILED

MAR 21 2011

OFFICE OF PETITIONS

In re Application of

Stephane QUERTELET, et *al.*
Application No. 12/413,867
Filed: March 30, 2009
Attorney Docket No. **0598-1023**

DECISION ON PETITION TO WITHDRAW FROM RECORD

This is a decision on the Request to Withdraw as attorney or agent of record under 37 C.F.R. § 1.36(b), filed February 11, 2011.

The request is **NOT APPROVED**.

The request to withdraw as attorney/agent of record and change of correspondence address is hereby not accepted. Petitioner has not complied with current USPTO requirements, set forth in 37 CFR 10.40 concerning Request for Withdrawal as Attorney and Change of Correspondence Address. Specifically, pursuant to 37 CFR 10.40, the Office will require the practitioner(s) to certify that he, she or they have:

> (1) given reasonable notice to the client, prior to the expiration of the reply period, that the practitioner(s) intends to withdraw from employment;
>
> (2) delivered to the client or duly authorized representative of the client all papers and property (including funds) to which the client is entitled; and
>
> (3) notified the client of any replies that may be due and the time frame within which the client must respond.

Petitioner has not complied with the above certifications. Also, petitioner has not properly submitted forwarding correspondence address information for the application.

The Office will only accept correspondence address changes to the most current address information provided for the assignee of the entire interest *who properly became of record under 37 CFR 3.71*, or if no assignee of the entire interest has properly been made of record, the most current address information provided for the first named inventor. 37 CFR 3.71 (c) states:

> ***An assignee becomes of record either in a national patent application or a reexamination proceeding by filing a statement in compliance with § 3.73 (b) that is signed by a party who is authorized to act on behalf of the assignee.***

Inquires concerning either the examination or status of the application should be directed to the Technology Center at (571) 272-3600. Telephone inquiries concerning this decision should be directed to the undersigned at (571) 272-7253.

/Monica A. Graves/
Petitions Examiner, Office of Petitions

UNITED STATES PATENT AND TRADEMARK OFFICE

COMMISSIONER FOR PATENTS
UNITED STATES PATENT AND TRADEMARK OFFICE
P.O. BOX 1450
ALEXANDRIA, VA 22313-1450
www.uspto.gov

ANDRUS, SCEALES, STARKE & SAWALL, LLP
100 EAST WISCONSIN AVENUE, SUITE 1100
MILWAUKEE, WI 53202

MAILED
MAY 03 2011
OFFICE OF PETITIONS

Applicant: Akiyasu Babaet al.
Appl. No.: 12/413,968
Filing Date: May 30, 2009
Title: METHODS OF PREDICTING EFFECTIVENESS OF APHERESIS THERAPY FOR HEART FAILURE
Attorney Docket: 5491-00002
Pub. No.: US 2010/0055038 A1
Pub. Date: March 4, 2010

This is a decision on the request for a corrected patent application publication under 37 CFR 1.221(b), received on May 3, 2010, for the above-identified application.

The request is DISMISSED.

Applicant requests that the application be republished because the patent application publication contains material errors in the specification wherein "Tnl" was incorrectly printed as "Tn1" (uppercase "l" not numeral "1"), (apheresis" was incorrectly printed as (apliersis) and "arrhythmian" was incorrectly printed as (arrhytlimias).

37 CFR 1.221 (b) is applicable: "only when the Office makes a material mistake which is apparent from Office records.... Any request for a corrected publication or revised patent application publication other than provided as provided in paragraph (a) of this section must be filed within two months from the date of the patent application publication. **This period is not extendable.**" A material mistake must affect the public's ability to appreciate the technical disclosure of the patent application publication, to determine the scope of the patent application publication, or to determine the scope of the provisional rights that an applicant may seek to enforce upon issuance of a patent. [1]

The errors noted by requester with respect publishing "Tn1" rather than "Tnl", "aplieresis" rather than "apheresis" and "arrhythmias" rather than "arrhytlimias" maybe Office errors but they are not a material Office errors under 37 CFR 1.221. The errors are clearly typographical error's, thus, one of ordinary skill in the art would clearly understand the nature of the typographical error. This error therefore does not affect the public's ability to appreciate the technical

[1]Changes to Implement Eighteen-Month Publication of Patent Applications, 65 FR 57023, 57038 (Sept. 20, 2000), 1239, Off. Gaz. Pat. Office Notices 63, 75 (Oct. 10, 2000) (final rule).

disclosure of the patent application publication, to determine the scope of the patent application publication, or to determine the scope of the provisional rights that an applicant may seek to enforce upon issuance of a patent.

The applicant is advised that a "request for republication of an application previously published" may be filed under 37 CFR 1.221(a). Such a request for republication "must include a copy of the application compliance with the Office's electronic filing system requirements and be accompanied by the publication fee set forth in § 1.18(d) and the processing fee set forth in § 1.17(i)." If the request for republication does not comply with the electronic filing system requirements, the republication will not take place and the publication fee set forth in § 1.18(d) will be refunded. The processing fee will be retained.

A guide for filing a request for a Pre-Grant Publication, such as a request for republication, may be found on the link below:

http://www.uspto.gov/patents/process/file/efs/guidance/index.jsp

http://www.uspto.gov/ebc/portal/efs/pgpub_quickstart.pdf

Any request for republication under 37 CFR 1.221(a), must be submitted via the EFS system, as a "Pre-Grant Publication" and questions or request for reconsideration of the decision, should be addressed as follows:

By mail to: Mail Stop PGPUB
Commissioner for Patents
P.O. Box 1450
Alexandria, Va. 22313-1450

Inquiries relating to this matter may be directed to Mark Polutta at (571) 272-7709.

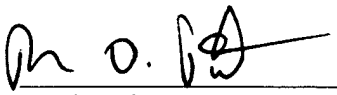

Mark Polutta
Senior Legal Advisor
Office of Patent Legal Administration
Office of the Deputy Commissioner
for Patent Examination Policy

UNITED STATES PATENT AND TRADEMARK OFFICE

Commissioner for Patents
United States Patent and Trademark Office
P.O. Box 1450
Alexandria, VA 22313-1450
www.uspto.gov

In re Application of
Dov BERGER

Application No. 12414041

Filed: March 30,2009

Attorney Docket No. 340568US30

:
:
:DECISION ON PETITION TO MAKE SPECIAL
:UNDER 37 CFR 1.102(c)(1)
:

This is a decision on the electronic petition under 37 CFR 1.102 (c)(1), filed 21-MAR-2012 to make the above-identified application special based on applicant's age as set forth in MPEP § 708.02, Section IV.

The petition is **GRANTED**.

A grantable petition to make an application special under 37 CFR 1.102(c)(1), MPEP § 708.02, Section IV: Applicant's Age must include a statement by applicant or a registered practitioner having evidence that applicant is at least 65 years of age. No fee is required.

Accordingly, the above-identified application has been accorded "special" status and will be taken up for action by the examiner upon the completion of all pre-examination processing.

Telephone inquiries concerning this electronic decision should be directed to the Electronic Business Center at 866-217-9197.

All other inquiries concerning either the examination or status of the application should be directed to the Technology Center.

Doc code : PET.OP.AGE
Description : Petition to make special based on Age/Health

PTO/SB/130 (07-09)
Approved for use through 07/31/2012. OMB 0651- 0031
U.S. Patent and Trademark Office; U.S. DEPARTMENT OF COMMERCE
Under the Paperwork Reduction Act of 1995, no persons are required to respond to a collection of information unless it contains a valid OMB control number

PETITION TO MAKE SPECIAL BASED ON AGE FOR ADVANCEMENT OF EXAMINATION UNDER 37 CFR 1.102(c)(1)

Application Information

Application Number	12/414,041	Confirmation Number	1272	Filing Date	2009-03-30
Attorney Docket Number (optional)	340568US30	Art Unit	3748	Examiner	Nguyen, H
First Named Inventor	Dov BERGER				
Title of Invention	A MULTI-HEAT SOURCE POWER PLANT				

Attention: Office of Petitions
An application may be made special for advancement of examination upon filing of a petition showing that the applicant is 65 years of age, or more. No fee is required with such a petition. See 37 CFR 1.102(c)(1) and MPEP 708.02 (IV).

APPLICANT HEREBY PETITIONS TO MAKE SPECIAL FOR ADVANCEMENT OF EXAMINATION IN THIS APPLICATION UNDER 37 CFR 1.102(c)(1) and MPEP 708.02 (IV) ON THE BASIS OF THE APPLICANT'S AGE.

A grantable petition requires one of the following items:
(1) Statement by one named inventor in the application that he/she is 65 years of age, or more; or
(2) Certification by a registered attorney/agent having evidence such as a birth certificate, passport, driver's license, etc. showing one named inventor in the application is 65 years of age, or more.

Name of Inventor who is 65 years of age, or older

Given Name	Middle Name	Family Name	Suffix
Lucien	Yehuda	Bronicki	

A signature of the applicant or representative is required in accordance with 37 CFR 1.33 and 10.18.
Please see 37 CFR 1.4(d) for the format of the signature.

Select (1) or (2) :

○ (1) I am an inventor in this application and I am 65 years of age, or more.

◉ (2) I am an attorney or agent registered to practice before the Patent and Trademark Office, and I certify that I am in possession of evidence, and will retain such in the application file record, showing that the inventor listed above is 65 years of age, or more.

Signature	/Robert T. Pous, Esq/	Date (YYYY-MM-DD)	2012-03-21
Name	Robert T. Pous, Esq.	Registration Number	29099

PTO/SB/130 (07-09)
Approved for use through 07/31/2012. OMB 0651- 0031
U.S. Patent and Trademark Office; U.S. DEPARTMENT OF COMMERCE
Under the Paperwork Reduction Act of 1995, no persons are required to respond to a collection of information unless it contains a valid OMB control number

Privacy Act Statement

The Privacy Act of 1974 (P.L. 93-579) requires that you be given certain information in connection with your submission of the attached form related to a patent application or patent. Accordingly, pursuant to the requirements of the Act, please be advised that: (1) the general authority for the collection of this information is 35 U.S.C. 2(b)(2); (2) furnishing of the information solicited is voluntary; and (3) the principal purpose for which the information is used by the U.S. Patent and Trademark Office is to process and/or examine your submission related to a patent application or patent. If you do not furnish the requested information, the U.S. Patent and Trademark Office may not be able to process and/or examine your submission, which may result in termination of proceedings or abandonment of the application or expiration of the patent.

The information provided by you in this form will be subject to the following routine uses:

1. The information on this form will be treated confidentially to the extent allowed under the Freedom of Information Act (5 U.S.C. 552) and the Privacy Act (5 U.S.C. 552a). Records from this system of records may be disclosed to the Department of Justice to determine whether the Fr eedom of Information Act requires disclosure of these records.

2. A record from this system of records may be disclosed, as a routine use, in the course of presenting evidence to a court, magistrate, or administrative tribunal, including disclosures to opposing counsel in the course of settlement negotiations.

3. A record in this system of records may be disclosed, as a routine use, to a Member of Congress submitting a request involving an individual, to whom the record pertains, when the individual has requested assistance from the Member with respect to the subject matter of the record.

4. A record in this system of records may be disclosed, as a routine use, to a contractor of the Agency having need for the information in order to perform a contract. Recipients of information shall be required to comply with the requirements of the Privacy Act of 1974, as amended, pursuant to 5 U.S.C. 552a(m).

5. A record related to an International Application filed under the Patent Cooperation Treaty in this system of records may be disclosed, as a routine use, to the International Bureau of the World Intellectual Property Organization, pursuant to the Patent Cooperation Treaty.

6. A record in this system of records may be disclosed, as a routine use, to another federal agency for purposes of National Security review (35 U.S.C. 181) and for review pursuant to the Atomic Energy Act (42 U.S.C. 218(c)).

7. A record from this system of records may be disclosed, as a routine use, to the Administrator, General Services, or his/her designee, during an inspection of records conducted by GSA as part of that agency's responsibility to recommend improvements in records management practices and programs, under authority of 44 U.S.C. 2904 and 2906. Such disclosure shall be made in accordance with the GSA regulations governing inspection of records for this purpose, and any other relevant (i.e., GSA or Commerce) directive. Such disclosure shall not be used to make determinations about indivi duals.

8. A record from this system of records may be disclosed, as a routine use, to the public after either publication of the application pursuant to 35 U.S.C. 122(b) or issuance of a patent pursuant to 35 U.S.C. 151. Further, a record may be disclosed, subject to the limitations of 37 CFR 1.14, as a routine use, to the public if the record was filed in an application which became abandoned or in which the proceedings were terminated and which application is referenced by either a published application, an application open to public inspections or an issued patent.

9. A record from this system of records may be disclosed, as a routine use, to a Federal, State, or local law enforcement agency, if the USPTO becomes aware of a violation or potential violation of law or regulation.

UNITED STATES PATENT AND TRADEMARK OFFICE

Commissioner for Patents
United States Patent and Trademark Office
P.O. Box 1450
Alexandria, VA 22313-1450
www.uspto.gov

CHOATE, HALL & STEWART LLP
TWO INTERNATIONAL PLACE
BOSTON MA 02110

MAILED

NOV 22 2010

OFFICE OF PETITIONS

In re Application of :
SAMUELS, Allen et al. :
Application No. 12/414,052 : DECISION ON PETITION
Filed: March 30, 2009 : TO WITHDRAW
Attorney Docket No. **2006579-1650 (CTX-312CON)** : FROM RECORD
:

This is a decision on the Request to Withdraw as attorney or agent of record under 37 C.F.R. § 1.36(b), filed November 10, 2010.

The request is **NOT APPROVED**.

The Office will no longer accept address changes to a new practitioner or law firm filed with a Request, absent the filing of a power of attorney to the new representative. The Office will either change the correspondence address of record to the most current address information provided for the assignee of the entire interest who properly became of record under 37 CFR 3.71 or, if no assignee of the entire interest has properly been made of record under 37 CFR 3.71, the most current address information provided for the first named inventor.

Accordingly, the request to withdraw from record cannot be approved because the request to change the correspondence address is not that of: (1) the first named inventor; or (2) an assignee of the entire interest under 37 C.F.R 3.71 who has properly intervened.

If an assignee has intervened in this application, then a Statement under 37 CFR 3.73(b) or a copy of the actual assignment must be submitted with a renewed request.

All future communications from the Office will continue to be directed to the above-listed address until otherwise notified by applicant.

Telephone inquiries concerning this decision should be directed to Tredelle Jackson at 571-272- 2783.

/Tredelle D. Jackson/
Paralegal Specialist
Office of Petitions

cc: **FOLEY & LARDNER LLP**
111 HUNTINGTON AVENUE
26TH FLOOR
BOSTON, MA 02199-7610

UNITED STATES PATENT AND TRADEMARK OFFICE

Commissioner for Patents
United States Patent and Trademark Office
P.O. Box 1450
Alexandria, VA 22313-1450
www.uspto.gov

REED SMITH, LLP
ATTN: PATENT RECORDS DEPARTMENT
599 LEXINGTON AVENUE, 29TH FLOOR
NEW YORK NY 10022-7650

MAILED

MAY 23 2011

OFFICE OF PETITIONS

In re Application of	:	
ITO, Atsushi	:	
Application No. 12/414,057	:	DECISION ON PETITION
Filed: March 30, 2009	:	TO WITHDRAW
Attorney Docket No. **504012.20003**	:	FROM RECORD
	:	

This is a decision on the Request to Withdraw as attorney or agent of record under 37 C.F.R. § 1.36(b), filed April 12, 2011.

The request is **NOT APPROVED.**

The Office will no longer accept address changes to a new practitioner or law firm filed with a Request, absent the filing of a power of attorney to the new representative. The Office will either change the correspondence address of record to the most current address information provided for the assignee of the entire interest who properly became of record under 37 CFR 3.71 or, if no assignee of the entire interest has properly been made of record under 37 CFR 3.71, the most current address information provided for the first named inventor.

37 CFR 3.71(c) states:

An assignee becomes of record either in a national patent application or a reexamination proceeding by filing a statement in compliance with § 3.73(b) that is signed by a party who is authorized to act on behalf of the assignee.

Therefore, as there is currently no statement under 37 CFR 3.73(b) of record in the instant application, the Office cannot change the correspondence address to the address on the Request for Withdrawal.

All future communications from the Office will continue to be directed to the above-listed address until otherwise notified by applicant.

Telephone inquiries concerning this decision should be directed to the undersigned at 571-272-4231.

Michelle R. Eason
Paralegal Specialist
Office of Petitions

UNITED STATES PATENT AND TRADEMARK OFFICE

UNITED STATES DEPARTMENT OF COMMERCE
United States Patent and Trademark Office
Address: COMMISSIONER FOR PATENTS
P.O. Box 1450
Alexandria, Virginia 22313-1450
www.uspto.gov

APPLICATION NO.	FILING DATE	FIRST NAMED INVENTOR	ATTORNEY DOCKET NO.	CONFIRMATION NO.
12/414,099	03/30/2009	Koju ITO	Q112877	1373

7590 10/14/2011

SUGHRUE MION, PLLC
2100 PENNSYLVANIA AVENUE, N.W.
SUITE 800
WASHINGTON, DC 20037

EXAMINER	
ROLLAND, ALEX A	

ART UNIT	PAPER NUMBER
1712	

NOTIFICATION DATE	DELIVERY MODE
10/14/2011	ELECTRONIC

DECISION GRANTING PETITION UNDER 37 CFR 1.138(d)

The declaration of express abandonment is recognized

This is in response to the petition under 37 CFR 1.138(d), requesting for a refund of any previously paid search fee and excess claims fee in the above-identified application.

The petition is granted.

The express abandonment is recognized. Any previously paid search fee and excess claims fee are hereby refunded.

Telephone inquiries should be directed to the Office of Data Management at (571) 272-4200.

Patent Publication Branch
Office of Data Management

UNITED STATES PATENT AND TRADEMARK OFFICE

Commissioner for Patents
United States Patent and Trademark Office
P.O. Box 1450
Alexandria, VA 22313-1450
www.uspto.gov

Hiscock & Barclay, LLP
One Park Place
300 South State Street
Syracuse, NY 13202-2078

MAILED

NOV 16 2011

OFFICE OF PETITIONS

In re Application of	:	
Jacobo Frias	:	
Application No. 12/414,175	:	DECISION ON PETITION
Filed: March 30, 2009	:	TO WITHDRAW
Attorney Docket No. 3052576US01	:	FROM RECORD
	:	

This is a decision on the Request to Withdraw as attorney or agent of record under 37 C.F.R. § 1.36(b), filed October 28, 2011.

The request is **APPROVED**.

A grantable request to withdraw as attorney/agent of record must be signed by every attorney/agent seeking to withdraw or contain a clear indication that one attorney is signing on behalf of another/others. A request to withdraw will not be approved unless at least 30 (thirty) days would remain between the date of approval and the later of the expiration date of a time to file a response or the expiration date of the maximum time period which can be extended under 37 C.F.R. § 1.136(a).

The request was signed by Denis J. Sullivan on behalf of attorneys/agents of record. All attorneys/agents of record have been withdrawn.

Applicant is reminded that there is no attorney of record at this time.

The correspondence address has been changed and is copied below.

Telephone inquiries concerning this decision should be directed to Kimberly Inabinet at 571-272-4618.

/Kimberly Inabinet/

Kimberly Inabinet
Petitions Examiner
Office of Petitions

cc: Jacobo Frias
2300 Sedgwick Avenue
Apartment 2F
Bronx, NY 10468

UNITED STATES PATENT AND TRADEMARK OFFICE

UNITED STATES DEPARTMENT OF COMMERCE
United States Patent and Trademark Office
Address: COMMISSIONER FOR PATENTS
P.O. Box 1450
Alexandria, Virginia 22313-1450
www.uspto.gov

APPLICATION NUMBER	FILING OR 371(C) DATE	FIRST NAMED APPLICANT	ATTY. DOCKET NO./TITLE
12/414,175	03/30/2009	Jacobo Frias	3052576US01

CONFIRMATION NO. 1500

72742
Hiscock & Barclay, LLP
One Park Place
300 South State Street
Syracuse, NY 13202-2078

POWER OF ATTORNEY NOTICE

OC000000050921131

Date Mailed: 11/10/2011

NOTICE REGARDING CHANGE OF POWER OF ATTORNEY

This is in response to the Power of Attorney filed 10/28/2011.

- The withdrawal as attorney in this application has been accepted. Future correspondence will be mailed to the new address of record. 37 CFR 1.33.

/kainabinet/

Office of Data Management, Application Assistance Unit (571) 272-4000, or (571) 272-4200, or 1-888-786-0101

UNITED STATES PATENT AND TRADEMARK OFFICE

Commissioner for Patents
United States Patent and Trademark Office
P.O. Box 1450
Alexandria, VA 22313-1450
www.uspto.gov

Decision Date : March 7, 2012

In re Application of :

Jacobo Frias

Application No : 12414175

Filed : 30-Mar-2009

Attorney Docket No : 3052576US01

DECISION ON PETITION

UNDER CFR 1.137(b)

This is an electronic decision on the petition under 37 CFR 1.137(b), filed March 7, 2012 , to revive the above-identified application.

The petition is **GRANTED.**

The above-identified application became abandoned for failure to reply in a timely manner to the Notice of Allowance and Issue Fee(s) Due. The date of abandonment is the day after the expiration date of the period set for reply in the Notice.

The electronic petition satisfies the conditions for revival pursuant to the provisions of 37 CFR 1.137(b) in that (1) the reply in the form of payment of the Issue Fee and the Publication Fee (if necessary); (2) the petition fee as set forth in 37 CFR 1.17 (m); (3) the drawing correction and/or other deficiencies (if necessary); and (4) the required statement of unintentional delay have been received. Accordingly, the Issue Fee payment is accepted as having been unintentionally delayed.

Telephone inquiries concerning this decision should be directed to the Patent Electronic Business Center (EBC) at 866-217-9197.

This application file is being directed to the Office of Data Management.

Office of Petitions

Doc Code: PET.AUTO Document Description: Petition automatically granted by EFS-Web	PTO/SB/64 U.S. Patent and Trademark Office Department of Commerce

Electronic Petition Request	PETITION FOR REVIVAL OF AN APPLICATION FOR PATENT ABANDONED UNINTENTIONALLY UNDER 37 CFR 1.137(b)
Application Number	12414175
Filing Date	30-Mar-2009
First Named Inventor	Jacobo Frias
Art Unit	3673
Examiner Name	FREDRICK CONLEY
Attorney Docket Number	3052576US01
Title	INFLATABLE TEMPERATURE CONTROL SYSTEM

The above-identified application became abandoned for failure to file a timely and proper reply to a notice or action by the United States Patent and Trademark Office. The date of abandonment is the day after the expiration date of the period set for reply in the office notice or action plus any extensions of time actually obtained.

APPLICANT HEREBY PETITIONS FOR REVIVAL OF THIS APPLICATION

NOTE: A grantable petition requires the following items:
(1) Petition fee;
(2) Reply and/or issue fee;
(3) Terminal disclaimer with disclaimer fee – required for all utility and plant applications filed before June 8, 1995; and for all design applications;
(4) Statement that the entire delay was unintentional.

Petition fee
The petition fee under 37CFR 1.17(m) is attached.

☐ Applicant claims SMALL ENTITY status. See 37 CFR 1.27.

☐ Applicant is no longer claiming SMALL ENTITY status. See 37 CFR 1.27(g)(2).

☒ Applicant(s) status remains as SMALL ENTITY.

☐ Applicant(s) status remains as other than SMALL ENTITY.

Issue Fee and Publication Fee :

Issue Fee and Publication Fee must accompany ePetition.

☒ Issue Fee Transmittal is attached

Drawing corrections and/ or other deficiencies.

◉ Drawing corrections and/ or other deficiencies are not required ○ I certify, in accordance with 37 CFR 1.4.(D)(4), that drawing corrections and/ or other deficiencies have previously been filed on ○ Drawing corrections and/ or other deficiencies are attached. ☒ STATEMENT: The entire delay in filing the required reply from the due date for the required reply until the filing of a grantable petition under 37 CFR 1.137(b) was unintentional.
THIS PORTION MUST BE COMPLETED BY THE SIGNATORY OR SIGNATORIES I certify, in accordance with 37 CFR 1.4(d)(4) that I am: ○ An attorney or agent registered to practice before the Patent and Trademark Office who has been given power of attorney in this application. ○ An attorney or agent registered to practice before the Patent and Trademark Office, acting in a representative capacity. ◉ A sole inventor ○ A joint inventor; I certify that I am authorized to sign this submission on behalf of all of the inventors. ○ A joint inventor; all of whom are signing this e-petition. ○ The assignee of record of the entire interest that has properly made itself of record pursuant to 37 CFR 3.71.

Signature	/Jacobo Frias/
Name	Jacobo Frias

UNITED STATES PATENT AND TRADEMARK OFFICE

Commissioner for Patents
United States Patent and Trademark Office
P.O. Box 1450
Alexandria, VA 22313-1450
www.uspto.gov

MAILED

MAR 23 2012

OFFICE OF PETITIONS

Jacobo Frias
2300 Sedgwick Avenue
Apt 2F
Bronx NY 10468

In re Application of :
Frias : DECISION ON PETITION
Application No. 12/414,175 :
Filed: March 30, 2009 :
Atty. Dkt. No.: 3052576US01 :

This letter is in response to the petition under 37 CFR 1.137(b), filed March 7, 2012.

It is noted that petitioner herein submitted both an electronic petition request under 37 CFR 1.137(b) on March 7, 2012 and a petition under 37 CFR 1.137(b) via mail on March 7, 2012.

It is noted that the electronic petition request filed was granted on March 7, 2012.

In view thereof, this application is being forwarded to the Office of Data Management for further processing.

Telephone inquiries concerning this matter may be directed to the undersigned at (571) 272-3205.

/ALESIA M. BROWN/

Alesia M. Brown
Attorney Advisor
Office of Petitions

UNITED STATES PATENT AND TRADEMARK OFFICE

Commissioner for Patents
United States Patent and Trademark Office
P.O. Box 1450
Alexandria, VA 22313-1450
www.uspto.gov

MAILED

APR 06 2012

OFFICE OF PETITIONS

JACOBO FRIAS
2300 SEDGWICK AVENUE
APT. 2F
BRONX, NY 10468

In re Application of :
Frias :
Application No. 12/414,175 : DECISION ON REQUEST FOR REFUND
Filed: March 30, 2009 :
Attorney Docket No. 3052576US01 :

This is a decision on the Request For Refund filed March 20, 2012.

The request is **DISMISSED**.

Applicant files the above request for refund and states that "The purpose of this letter is to request a refund of $930.00 paid as a penality for late payment if [sic] issue and publication patent fees. The applicant submits that the referred patent application was unintentionally abandoned. The applicant was never directed to make the payment and/or was not informed of any due date and penalties associated with late payment. Applicant did not know that the first letter containing the "Notice Of Allowability" should had also included the fee transmittal with instructions for payment. Applicant has acted in good faith and diligently in responding in a timely manner to all Office correspondences related to this application."

As to the above, the Notice of Allowance and Fee(s) Due mailed November 15, 2011, clearly indicate the due date of **February 15, 2012**, for payment of the issue and publication fees. The Notice also stated "**THE ISSUE FEE AND PUBLICATION FEE (IF REQUIRED) MUST BE PAID WITHIN THREE MONTHS FROM THE MAILING DATE OF THIS NOTICE OR THIS APPLICATION SHALL BE REGARDED AS ABANDONED. THIS STATUTORY PERIOD CANNOT BE EXTENDED. SEE 35 U.S.C. 151. THE ISSUE FEE DUE INDICATED ABOVE DOES NOT REFLECT A CREDIT FOR ANY PREVIOUSLY PAID ISSUE FEE IN THIS APPLICATION. IF AN ISSUE FEE HAS PREVIOUSLY BEEN PAID IN THIS APPLICATION (AS SHOWN ABOVE), THE RETURN OF PART B OF THIS FORM WILL BE CONSIDERED A REQUEST TO REAPPLY THE PREVIOUSLY PAID ISSUE FEE TOWARD THE ISSUE FEE NOW DUE.**"

Applicant's attention is directed to MPEP 607.02 which states:

> Under 35 U.S.C. 42(d) and 37 CFR 1.26, the Office may refund: (1) a fee paid by mistake (e.g., fee paid when no fee is required); or (2) any fee paid in excess of the amount of fee

> that is required. See Ex parte Grady, 59 USPQ 276, 277 (Comm'r Pat. 1943) (the statutory authorization for the refund of fees under the "by mistake" clause is applicable only to a mistake relating to the fee payment).
>
> When an applicant or patentee takes an action "by mistake" (e.g., files an application or maintains a patent in force "by mistake"), the submission of fees required to take that action (e.g., a filing fee submitted with such application or a maintenance fee submitted for such patent) is **not** a "fee paid by mistake" within the meaning of 35 U.S.C. 42(d).

Furthermore, MPEP 711.03 (c) states that:

> [T]he petition fee is required for the filing (and not merely the grant) of a petition under 37 CFR 1.137. See H.R. Rep. No. 542, 97th Cong., 2d Sess. 6 (1982), reprinted in 1982 U.S.C.C.A.N. 770 ("[t]he fees set forth in this section are due on filing the petition"). Therefore, the Office: (A) will not refund the petition fee required by 37 CFR 1.17(1) or 1.17(m), regardless of whether the petition under 37 CFR 1.137 is dismissed or denied; and (B) will not reach the merits of any petition under 37 CFR 1.137 lacking the requisite petition fee.

In view of the above, the request for refund is dismissed as the petition fee was not paid "by mistake". Additionally, the $930.00 petition fee is required for the filing of the petition under 37 CFR 1.137(b).

Any questions concerning this matter may be directed to the undersigned at (571) 272-3208.

/KOC/
Karen Creasy
Petitions Examiner
Office of Petitions

UNITED STATES PATENT AND TRADEMARK OFFICE

Commissioner for Patents
United States Patent and Trademark Office
P.O. Box 1450
Alexandria, VA 22313-1450
www.uspto.gov

MAILED
MAR 14 2011
OFFICE OF PETITIONS

BARBARA A. SHIMEI
DIRECTOR, PATENTS & LICENSING
BAYER HEALTHCARE LLC – PHARMACEUTICALS
555 WHITE PLAINS ROAD, THIRD FLOOR
TARRYTOWN NY 10591

In re Application of	:	
SHIMADA, et al	:	
Application No. 12/414,257	:	DECISION ON PETITION
Filed: March 30, 2009	:	
Attorney Docket No. RCK 36C1	:	

This is a decision on the petition filed January 5, 2011, under the unintentional provisions of 37 CFR 1.137(b), to revive the above-identified application.

The petition is **GRANTED.**

The application became abandoned for failure to reply in a timely manner to the Restriction Requirement, mailed June 10, 2010, which set a shortened statutory period for reply of one (1) month or thirty (30) days (whichever is later). No extensions of time under the provisions of 37 CFR 1.136(a) were obtained. Accordingly, the application became abandoned on July 11, 2010.

The petition satisfies the requirements of 37 CFR 1.137(b) in that petitioner has supplied (1) the reply in the form of an amendment and election, (2) the petition fee of $1620; and (3) the required statement of unintentional delay.

There is no indication that the person signing the petition was ever given a power of attorney to prosecute the application. If the person signing the petition desires to receive future correspondence regarding this application, the appropriate power of attorney document must be submitted

An extension of time under 37 CFR 1.136 must be filed prior to the expiration of the maximum extendable period for reply. *See* In re Application of S., 8 USPQ2d 1630, 1631 (Comm'r Pats. 1988). Since the $2350 extension of time fee submitted with the petition on January 5, 2011,

was subsequent to the maximum extendable period for reply, this fee is unnecessary and will be credited to petitioner's deposit account.

Telephone inquiries concerning this decision should be directed to the undersigned at (571) 272-6735.

This application is being referred to Technology Center AU 1624 for appropriate action by the Examiner in the normal course of business.

/Diane C. Goodwyn/
Diane C. Goodwyn
Petitions Examiner
Office of Petitions

UNITED STATES PATENT AND TRADEMARK OFFICE

UNITED STATES DEPARTMENT OF COMMERCE
United States Patent and Trademark Office
Address: COMMISSIONER FOR PATENTS
P.O. Box 1450
Alexandria, Virginia 22313-1450
www.uspto.gov

APPLICATION NO.	FILING DATE	FIRST NAMED INVENTOR	ATTORNEY DOCKET NO.	CONFIRMATION NO.
12/414,274	03/30/2009	Deborah Knutzon	17224.04 (29135-120)	1673

81774 7590 05/04/2011

Armstrong Teasdale LLP (Monsanto #1 -BVO)
Christopher M. Goff
7700 Forsyth Boulevard
Suite 1800
St. Louis, MO 63105

EXAMINER	
DESAI, ANAND U	

ART UNIT	PAPER NUMBER
1656	

NOTIFICATION DATE	DELIVERY MODE
05/04/2011	ELECTRONIC

Please find below and/or attached an Office communication concerning this application or proceeding.

The time period for reply, if any, is set in the attached communication.

Notice of the Office communication was sent electronically on above-indicated "Notification Date" to the following e-mail address(es):

USpatents@armstrongteasdale.com

UNITED STATES PATENT AND TRADEMARK OFFICE

Commissioner for Patents
United States Patent and Trademark Office
P.O. Box 1450
Alexandria, VA 22313-1450
www.uspto.gov

Armstrong Teasdale LLP (Monsanto #1 -BVO)
Christopher M. Goff
7700 Forsyth Boulevard
Suite 1800
St. Louis MO 63105

Applicant: Knutzon et al.
Appl. No.: 12/414,274
Filing Date: March 30, 2009
Title: METHODS AND COMPOSITIONS FOR SYNTHESIS OF LONG CHAIN POLYUNSATURATED FATTY ACIDS
Attorney Docket No.: 17224.04 (29135-120)
Pub. No.: US 2010/0310710 A1
Pub. Date: December 9, 2010

This is a decision on the request for republication of patent application publication under 37 CFR 1.221(a), filed on April 11, 2011, for the above-identified application.

The request under 37 CFR 1.221(a) is DISMISSED.

37 CFR 1.221(a) requires "a copy of the application in compliance with the Office electronic filing system requirements and be accompanied by the publication fee set forth in § 1.18(d) and the processing fee set forth in § 1.17(i)". If the request for republication does not comply with the electronic filing system requirements, the republication will not take place and the publication fee set forth in § 1.18(d) will be refunded. The processing fee will be retained.

The applicant did not supply a copy of the application in compliance with the Office electronic filing system, as required by 37 CFR 1.221(a) because **the applicant submitted the papers as a "Document for an existing application", which are entered into the application file, and not as a "Pre-Grant Publication" submission**. In addition, the applicant did not provide a copy of the application for publication purposes. The request for republication does not comply with the electronic filing system requirements, thus republication will not take place.

Any request for republication under 37 CFR 1.221(a), must be submitted via the EFS system, as a Pre-Grant publication submission and must include a copy of the application in compliance with the Office electronic filing system requirements. The applicant is directed to the following

website for additional instructions on how to submit a Pre-Grant Publication submission via the electronic filing system:

http://www.uspto.gov/ebc/portal/efs/pgpub_quickstart.pdf

Any questions or requests for reconsideration of the decision should be addressed as follows:

By mail to: Mail Stop PGPUB
Commissioner for Patents
P.O. Box 1450
Alexandria, Va. 22313-1450

By facsimile: 571-273-8300

Telephone inquiries regarding this correspondence should be directed to The Office of Data Management at 571-272-4200.

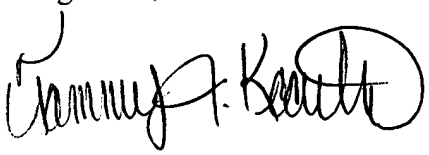

Tammy J. Koontz
Office of Data Management
United States Patent & Trademark Office

UNITED STATES PATENT AND TRADEMARK OFFICE

Commissioner for Patents
United States Patent and Trademark Office
P.O. Box 1450
Alexandria, VA 22313-1450
www.uspto.gov

DICKSTEIN SHAPIRO LLP
1633 BROADWAY
NEW YORK, NY 10019

MAILED
OCT 06 2011
OFFICE OF PETITIONS

In re Application of :
Kiyohiro Koto :
Application No.: 12/414,287 : ON PETITION
Filed: March 30, 2009 :
Attorney Docket No.: M1071.2128 :

This is a decision on the petition, filed October 5, 2011, under 37 CFR 1.313(c)(2) to withdraw the above-identified application from issue after payment of the issue fee.

The petition is **GRANTED**.

The above-identified application is withdrawn from issue for consideration of a submission under 37 CFR 1.114 (request for continued examination). See 37 CFR 1.313(c)(2).

Petitioner is advised that the issue fee paid on September 21, 2011, cannot be refunded. If, however, this application is again allowed, petitioner may request that it be applied towards the issue fee required by the new Notice of Allowance.[1]

Telephone inquiries relating to this decision should be directed to the undersigned at (571) 272-3204.

The application is being referred to Technology Center AU 2833 for further processing of the request for continued examination under 37 CFR 1.114 and for consideration of the concurrently filed Information Disclosure Statement (IDS).

/SDB/

Sherry D. Brinkley
Petitions Examiner
Office of Petitions

[1] *The request to apply the issue fee to the new Notice may be satisfied by completing and returning the new Part B – Fee(s) Transmittal Form (along with any balance due at the time of submission). Petitioner is advised that the Issue Fee Transmittal Form must be completed and timely submitted to avoid abandonment of the application.*

UNITED STATES PATENT AND TRADEMARK OFFICE

Commissioner for Patents
United States Patent and Trademark Office
P.O. Box 1450
Alexandria, VA 22313-1450
www.uspto.gov

Decision Date : April 18, 2012

In re Application of :

Kiyohiro Koto

DECISION ON PETITION

UNDER CFR 1.313(c)(2)

Application No : 12414287

Filed : 30-Mar-2009

Attorney Docket No : M1071.2128

This is an electronic decision on the petition under 37 CFR 1.313(c)(2), filed April 18, 2012 , to withdraw the above-identified application from issue after payment of the issue fee.

The petition is **GRANTED.**

The above-identified application is withdrawn from issue for consideration of a submission under 37 CFR 1.114 (request for continued examination). See 37 CFR 1.313(c)(2).

Petitioner is advised that the issue fee paid in this application cannot be refunded. If, however, this application is again allowed, petitioner may request that it be applied towards the issue fee required by the new Notice of Allowance.

Telephone inquiries concerning this decision should be directed to the Patent Electronic Business Center (EBC) at 866-217-9197.

This application file is being referred to Technology Center AU 2833 for processing of the request for continuing examination under 37 CFR 1.114 .

Office of Petitions

Doc Code: PET.AUTO Document Description: Petition automatically granted by EFS-Web	PTO/SB/140 U.S. Patent and Trademark Office Department of Commerce

Electronic Petition Request	**PETITION TO WITHDRAW AN APPLICATION FROM ISSUE AFTER PAYMENT OF THE ISSUE FEE UNDER 37 CFR 1.313(c)**
Application Number	12414287
Filing Date	30-Mar-2009
First Named Inventor	Kiyohiro Koto
Art Unit	2833
Examiner Name	KYUNG LEE
Attorney Docket Number	M1071.2128
Title	NTC THERMISTOR CERAMIC AND NTC THERMISTOR USING THE SAME

An application may be withdrawn from issue for further action upon petition by the applicant. To request that the Office withdraw an application from issue, applicant must file a petition under this section including the fee set forth in § 1.17(h) and a showing of good and sufficient reasons why withdrawal of the application from issue is necessary.

APPLICANT HEREBY PETITIONS TO WITHDRAW THIS APPLICATION FROM ISSUE UNDER 37 CFR 1.313(c).

A grantable petition requires the following items:
(1) Petition fee; and
(2) One of the following reasons:
(a) Unpatentability of one or more claims, which must be accompanied by an unequivocal statement that one or more claims are unpatentable, an amendment to such claim or claims, and an explanation as to how the amendment causes such claim or claims to be patentable;
(b) Consideration of a request for continued examination in compliance with § 1.114 (for a utility or plant application only); or
(c) Express abandonment of the application. Such express abandonment may be in favor of a continuing application, but not a CPA under 37 CFR 1.53(d).

Petition Fee

☐ Applicant claims SMALL ENTITY status. See 37 CFR 1.27.

☐ Applicant is no longer claiming SMALL ENTITY status. See 37 CFR 1.27(g)(2).

☐ Applicant(s) status remains as SMALL ENTITY.

☒ Applicant(s) status remains as other than SMALL ENTITY

Reason for withdrawal from issue

◯ One or more claims are unpatentable ◉ Consideration of a request for continued examination (RCE) (List of Required Documents and Fees) ◯ Applicant hereby expressly abandons the instant application (any attorney/agent signing for this reason must have power of attorney pursuant to 37 CFR 1.32(b)).
RCE request,submission, and fee. ☐ I certify, in accordance with 37 CFR 1.4(d)(4) that : The RCE request ,submission, and fee have already been filed in the above-identified application on ☒ Are attached.
THIS PORTION MUST BE COMPLETED BY THE SIGNATORY OR SIGNATORIES I certify, in accordance with 37 CFR 1.4(d)(4) that I am: ◉ An attorney or agent registered to practice before the Patent and Trademark Office who has been given power of attorney in this application. ◯ An attorney or agent registered to practice before the Patent and Trademark Office, acting in a representative capacity. ◯ A sole inventor ◯ A joint inventor; I certify that I am authorized to sign this submission on behalf of all of the inventors ◯ A joint inventor; all of whom are signing this e-petition ◯ The assignee of record of the entire interest that has properly made itself of record pursuant to 37 CFR 3.71

Signature	/Edward A. Meilman/
Name	Edward A. Meilman
Registration Number	24735

UNITED STATES PATENT AND TRADEMARK OFFICE

Commissioner for Patents
United States Patent and Trademark Office
P.O. Box 1450
Alexandria, VA 22313-1450
www.uspto.gov

Letham Law Firm, LLC
914 N. Tucana Lane
Gilbert, AZ 85234

MAILED

MAR 28 2011

OFFICE OF PETITIONS

In re Application of :
John Spenik, et. al. :
Application No. 12/414,356 : DECISION ON PETITION
Filed: March 30, 2009 : TO WITHDRAW FROM
Attorney Docket No. 0609.006.010 : RECORD

This is a decision on the Request to Withdraw as attorney or agent of record under 37 CFR §§ 1.36(b) or 10.40 filed February 23, 2011.

The request is **NOT APPROVED**.

Practitioner should determine whether he or she was appointed by naming each practitioner individually or through the use of a Customer Number[1]. If the practitioner(s) were appointed by a specific designation, then the request should ask that each specified practitioner be withdrawn and should list each practitioner(s) in the Request. Similarly, if practitioner(s) was appointed by a Customer Number, the practitioner(s) should ensure that the correct number is provided in the Request.

Further, the request cannot be approved because the requested change in the correspondence address is improper[2].

The Office will only accept correspondence address changes to the most current address information provided for the assignee of the entire interest, *who properly became of record under 37 CFR 3.71*[3], or, if no assignee of the entire interest

---

[1] It is noted that the Office entered the attorneys of record by Customer Number. However, a review of the record shows that the attorney was individually appointed in the combined Declaration and Power of Attorney filed on March 30, 2009.

[2] The Office will no longer change the correspondence address to that of a new practitioner unless the Request is accompanied by a power of attorney to a new practitioner (*See* USPTO Form PTO/SB/82).

[3] 37 CFR 3.71(c) states:

> *An assignee becomes of record either in a national patent application or a reexamination proceeding by filing a statement in compliance with § 3.73(b) that is signed by a party who is authorized to act on behalf of the assignee.*

has properly been made of record, the most current address information provided for the first named signing inventor.

In view of the above, all future communications from the Office will continue to be directed to the above-listed address unless otherwise notified by the applicant.

Telephone inquiries concerning this decision should be directed to the undersigned at (571) 272-3226.

Andrea Smith
Petitions Examiner
Office of Petitions

cc: My Object Tracker Company
c/o Lat J. Celmins
8171 E. Indian Bend Road, #101
Scottsdale, AZ 85250

UNITED STATES PATENT AND TRADEMARK OFFICE

Commissioner for Patents
United States Patent and Trademark Office
P.O. Box 1450
Alexandria, VA 22313-1450
www.uspto.gov

Letham Law Firm, LLC
914 N. Tucana Lane
Gilbert, AZ 85234

MAILED

MAY 23 2011

OFFICE OF PETITIONS

In re Application of :

John Spenik, et. al. :
Application No. 12/414,356 : DECISION ON PETITION
Filed: March 30, 2009 : TO WITHDRAW FROM
Attorney Docket No. 0609.006.010 : RECORD

This is a decision on the renewed Request to Withdraw as attorney or agent of record under 37 CFR §§ 1.36(b) or 10.40 filed May 6, 2011.

The renewed request is **NOT APPROVED**.

The request cannot be approved because the requested change in the correspondence address is improper.

The Office will no longer change the correspondence address to that of a new practitioner unless the Request is accompanied by a power of attorney to a new practitioner (e.g., Form PTO/SB/82). However, the Office will only accept correspondence address changes to the most current address information provided for the assignee of the entire interest *that properly became of record under 37 CFR 3.71,* or, if no assignee of the entire interest has properly been made of record, the most current address information provided for the first named inventor. 37 CFR 3.71(c) states:

> *An assignee becomes of record either in a national patent application or a reexamination proceeding by filing a statement in compliance with § 3.73(b) that is signed by a party who is authorized to act on behalf of the assignee.*

Therefore, as there is currently no Statement under 37 CFR 3.73(b)[1] with the current assignee information of record in the instant application, the Office cannot change the correspondence address to the address on the Request to Withdraw at this present time.

In view of the above, all future communications from the Office will continue to be directed to the above-listed address unless otherwise notified by the applicant.

Telephone inquiries concerning this decision should be directed to the undersigned at (571) 272-3226.

Andrea Smith
Petitions Examiner
Office of Petitions

cc: Roc2Trac, Inc.
1819 Polk Street
Suite #344
San Francisco, CA 94109

[1] See USPTO Form No. PTO/SB/96. Also, recordation of an assignment in the assignment records of the Office does **not**, by itself, permit the assignee to take action in the application, patent, or other patent proceeding.

UNITED STATES PATENT AND TRADEMARK OFFICE

Commissioner for Patents
United States Patent and Trademark Office
P.O. Box 1450
Alexandria, VA 22313-1450
www.uspto.gov

Letham Law Firm, LLC
914 N. Tucana Lane
Gilbert, AZ 85234

MAILED

JUN 28 2011

OFFICE OF PETITIONS

In re Application of :
John Spenik, et. al. :
Application No. 12/414,356 : DECISION ON PETITION
Filed: March 30, 2009 : TO WITHDRAW FROM
Attorney Docket No. 0609.006.010 : RECORD

This is a decision on the renewed Request to Withdraw as attorney or agent of record under 37 CFR §§ 1.36(b) or 10.40 filed June 8, 2011.

The request is **APPROVED**.

The request was signed by D. Lawrence Letham on behalf of himself. Therefore, D. Lawrence Letham has been withdrawn.

Applicant is reminded that there is no attorney/agent of record at this time.

This application file is being referred to Technology Center Art Unit 2858 for examination in due course.

All future communications from the Office will be directed to the first named inventor at the address listed below until otherwise properly notified by the applicant.

Telephone inquiries concerning this decision should be directed to the undersigned at (571) 272-3226.

Andrea Smith
Petitions Examiner
Office of Petitions

cc: John Spenik
21015 North 16th Way
Phoenix, AZ 85024

UNITED STATES PATENT AND TRADEMARK OFFICE

UNITED STATES DEPARTMENT OF COMMERCE
United States Patent and Trademark Office
Address: COMMISSIONER FOR PATENTS
P.O. Box 1450
Alexandria, Virginia 22313-1450
www.uspto.gov

APPLICATION NUMBER	FILING OR 371(C) DATE	FIRST NAMED APPLICANT	ATTY. DOCKET NO./TITLE
12/414,356	03/30/2009	John Spenik	0609.006.010

CONFIRMATION NO. 1812

66501
Letham Law Firm LLC
914 N. Tucana Lane
Gilbert, AZ 85234

POWER OF ATTORNEY NOTICE

OC000000048395856

Date Mailed: 06/23/2011

NOTICE REGARDING CHANGE OF POWER OF ATTORNEY

This is in response to the Power of Attorney filed 06/08/2011.

- The withdrawal as attorney in this application has been accepted. Future correspondence will be mailed to the new address of record. 37 CFR 1.33.

/amsmith/

Office of Data Management, Application Assistance Unit (571) 272-4000, or (571) 272-4200, or 1-888-786-0101

UNITED STATES PATENT AND TRADEMARK OFFICE

UNITED STATES DEPARTMENT OF COMMERCE
United States Patent and Trademark Office
Address: COMMISSIONER FOR PATENTS
P.O. Box 1450
Alexandria, Virginia 22313-1450
www.uspto.gov

APPLICATION NO.	FILING DATE	FIRST NAMED INVENTOR	ATTORNEY DOCKET NO.	CONFIRMATION NO.
12/414,383	03/30/2009	Caihua WAN	2091-0505PUS1	1851

2292 7590 03/22/2011

BIRCH STEWART KOLASCH & BIRCH
PO BOX 747
FALLS CHURCH, VA 22040-0747

EXAMINER	
BELLA, MATTHEW C	

ART UNIT	PAPER NUMBER
2624	

NOTIFICATION DATE	DELIVERY MODE
03/22/2011	ELECTRONIC

Please find below and/or attached an Office communication concerning this application or proceeding.

The time period for reply, if any, is set in the attached communication.

Notice of the Office communication was sent electronically on above-indicated "Notification Date" to the following e-mail address(es):

mailroom@bskb.com

UNITED STATES PATENT AND TRADEMARK OFFICE

Commissioner for Patents
United States Patent and Trademark Office
P.O. Box 1450
Alexandria, VA 22313-1450
www.uspto.gov

BIRCH STEWART KOLASCH & BIRCH
PO BOX 747
FALLS CHURCH VA 22040-0747

In re Application of	:	
WAN, CAIHUA	:	DECISION ON REQUEST TO
Application No. 12/414,383	:	PARTICIPATE IN PATENT
Filed: March 30, 2009	:	PROSECUTION HIGHWAY
Attorney Docket No. **2091-0505PUS1**	:	PROGRAM AND PETITION
	:	TO MAKE SPECIAL UNDER
	:	37 CFR 1.102(a)

This is a decision on the request to participate in the Patent Prosecution Highway (PPH) program and the petition under 37 CFR 1.102(a), filed January 21, 2011 to make the above-identified application special.

The request and petition are **GRANTED**.

A grantable request to participate in the PPH program and petition to make special require:

(1) The U.S. application must validly claim priority under 35 U.S.C. 119(a) to one or more applications filed in the JPO;
(2) Applicant must submit a copy of the allowable/patentable claim(s) from the JPO application(s) along with an English translation thereof and a statement that the English translation is accurate;
(3) All the claims in the U.S. application must sufficiently correspond or be amended to sufficiently correspond to the allowable/patentable claim(s) in the JPO application(s);
(4) Examination of the U.S. application has not begun;
(5) Applicant must submit a copy of all the office actions from each of the JPO application(s) containing the allowable/patentable claim(s) along with an English translation thereof and a statement that the English translation is accurate; and
(6) Applicant must submit an IDS listing the documents cited by the JPO examiner in the JPO office action along with copies of documents except U.S. patents or U.S. patent application publications.

The request to participate in the PPH program and petition comply with the above requirements. Accordingly, the above-identified application has been accorded "special" status.

Telephone inquiries concerning this decision should be directed to Doris To at 571-272-7629.

All other inquiries concerning the examination or status of the application should be directed to Patent Application Information Retrieval (PAIR) system.

/Doris To/

Doris To
Quality Assurance Specialist
Technology Center 2600
Communications

UNITED STATES PATENT AND TRADEMARK OFFICE

Commissioner for Patents
United States Patent and Trademark Office
P.O. Box 1450
Alexandria, VA 22313-1450
www.uspto.gov

VIKSNINS HARRIS & PADYS PLLP
P.O. BOX 111098
ST. PAUL MN 55111-1098

MAILED
MAR 07 2011
OFFICE OF PETITIONS

In re Application of :
Do, et al. : DECISION ON APPLICATION
Application No. 12/414,403 : FOR
Filed: March 30, 3009 : PATENT TERM ADJUSTMENT
Atty Docket No. 01005.018US1

This is a decision on the "APPLICATION FOR PATENT TERM ADJUSTMENT UNDER 37 CFR § 1.705(b)," filed February 1, 2011. Applicants request that the initial determination of patent term adjustment under 35 U.S.C. 154(b) be corrected from three (3) days to twenty-six (26) days.

The application for patent term adjustment is **GRANTED.**

The Office has updated the PAIR screen to reflect that the correct Patent Term Adjustment (PTA) determination at the time of the mailing of the Notice of Allowance is twenty-six (26) days A copy of the updated PAIR screen, showing the correct determination, is enclosed.

On November 1, 2010, the Office mailed the Determination of Patent Term Adjustment under 35 U.S.C. 154(b) in the above-identified application. The Notice stated that the patent term adjustment (PTA) to date is three (3) days. On February 1, 2011, applicants timely submitted the instant application for patent term adjustment.

Applicants dispute the reduction of twenty-three (23) days for filing of the "SUPPLEMENTAL RESPONSE TO RESTRICTION REQUIREMENT AND AMENDMENT AND RESPONSE UNDER 37 CFR 1.111" on September 17, 2010, after a reply had been filed. See 37 C.F.R. § 1.704(c)(8)[2].

[2] 37 CFR § 1.704(c)(8) states:

> Submission of a supplemental reply or other paper, other than a supplemental reply or other paper expressly requested by the examiner,

Applicants contend that they submitted the "SUPPLEMENTAL RESPONSE TO RESTRICTION REQUIREMENT AND AMENDMENT AND RESPONSE UNDER 37 CFR 1.111" at the request of the examiner.

Applicants' contention is well taken. The record supports a conclusion that the supplemental reply filed September 17, 2010, was expressly requested by the examiner within the meaning of 37 CFR 1.704(c)(8). Accordingly, the reduction of 23 days is not warranted and is being removed.

In view thereof, the correct patent term adjustment at the time of the mailing of the notice of allowance is **twenty-six (26) days** (26 days of Office delay - 0 days of applicant delay = 26 days).

Submission of the $200.00 fee set forth in 37 C.F.R. § 1.18(e) is acknowledged. No additional fee is required.

Applicants are reminded that any delays by the Office pursuant to 37 CFR 1.702(a)(4) and 1.702(b) and any applicant delays under 37 CFR 1.704(c)(10) will be calculated at the time of the issuance of the patent and applicants will be notified of the revised patent term adjustment to be indicated on the patent in the Issue Notification letter that is mailed to applicants approximately three weeks prior to issuance.

Telephone inquiries regarding this matter should be directed to the undersigned at (571) 272-3222.

/Kenya A. Mclaughlin/

Kenya A. McLaughlin
Petitions Attorney
Office of Petitions

Enclosure: Copy of REVISED PALM screen

---

after a reply has been filed, in which case the period of adjustment set forth in § 1.703 shall be reduced by the number of days, if any, beginning on the day after the date the initial reply was filed and ending on the date that the supplemental reply or other such paper was filed[.]

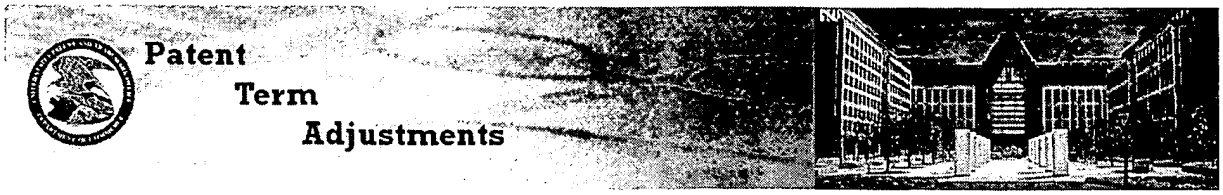

PTA/PTE Information | Patent Term Adjustment | Patent Term Extension

Application Number*: 12414403 Search | Explanation of PTA Calculation | Explanation of PTE Calculation

PTA Calculations for Application: 12414403

Application Filing Date	03/30/2009	OverLapping Days Between (A and B) or (A and C)	0
Issue Date of Patent		Non-Overlapping USPTO Delays:	26
A Delays	26	PTO Manual Adjustment	23
B Delays	0	Applicant Delay (APPL)	23
C Delays	0	Total PTA (days)	26

* - Sorted Column

File Contents History

Action Number	Action Recorded Date	Action Due Date	Action Code	Action Description	Duration PTO	Duration APPL	Parent Action Number
52	03/03/2011		P028	Adjustment of PTA Calculation by PTO	23	0	
44	11/01/2010		MN/=.	Mail Notice of Allowance		0	
42	10/29/2010		IREV	Issue Revision Completed		0	
41	10/29/2010		DVER	Document Verification		0	
40	10/29/2010		N/=.	Notice of Allowance Data Verification Completed		0	
39	10/29/2010		DOCK	Case Docketed to Examiner in GAU		0	
38	10/29/2010		CNTA	Allowability Notice		0	
37	09/22/2010		FWDX	Date Forwarded to Examiner		0	
36	09/17/2010	08/25/2010	SA..	Supplemental Response		23	24
29	09/03/2010		MEXIN	Mail Examiner Interview Summary (PTOL - 413)		0	
28	09/01/2010		EXIN	Examiner Interview Summary Record (PTOL - 413)		0	
25	08/27/2010		FWDX	Date Forwarded to Examiner		0	
24	08/25/2010		ELC.	Response to Election / Restriction Filed		0	
23	08/25/2010		XT/G	Request for Extension of Time - Granted		0	
22	06/25/2010	05/30/2010	MCTRS	Mail Restriction Requirement	26	-1	
21	06/23/2010		CTRS	Restriction/Election Requirement		0	
17	02/22/2010		DOCK	Case Docketed to Examiner in GAU		0	
14	10/01/2009		PG-ISSUE	PG-Pub Issue Notification		0	
13	09/28/2009		DOCK	Case Docketed to Examiner in GAU		0	
32	09/03/2009		IDSC	Information Disclosure Statement considered		0	
16	09/03/2009		RCAP	Reference capture on IDS		0	
15	09/03/2009		M844	Information Disclosure Statement (IDS) Filed		0	
12	09/03/2009		WIDS	Information Disclosure Statement (IDS) Filed		0	
10	07/16/2009		OIPE	Application Dispatched from OIPE		0	
9	06/24/2009		PGPC	Sent to Classification Contractor		0	
8	06/24/2009		FLRCPT.U	Filing Receipt - Updated		0	
7	06/10/2009		FLFEE	Payment of additional filing fee/Preexam		0	
6	06/10/2009		OATHDECL	A statement by one or more inventors satisfying the requirement under 35 USC 115, Oath of the Applic		0	
5	04/13/2009		INCD	Notice Mailed--Application Incomplete--Filing Date Assigned		0	
4	04/13/2009		FLRCPT.O	Filing Receipt		0	
3	04/01/2009		L194	Cleared by OIPE CSR		0	
2	03/30/2009		SCAN	IFW Scan & PACR Auto Security Review		0	
1	03/30/2009		IEXX	Initial Exam Team nn		0	

Export to: Excel

UNITED STATES PATENT AND TRADEMARK OFFICE

Commissioner for Patents
United States Patent and Trademark Office
P.O. Box 1450
Alexandria, VA 22313-1450
www.uspto.gov

LANIER FORD SHAVER & PAYNE P.C.
P O BOX 2087
HUNTSVILLE AL 35804-2087

MAILED

SEP 13 2010

OFFICE OF PETITIONS

In re Application of :
Marcia L. Rock et al. :
Application No. 12/414,413 : DECISION ON PETITION
Filed: March 30, 2009 :
Attorney Docket No. **09-0190.1050** :

This is a decision on the petition filed April 22, 2010, which is being treated as a petition under 37 CFR 1.181 (no fee) requesting withdrawal of the holding of abandonment in the above-identified application.

The petition is **DISMISSED**.

Any request for reconsideration of this decision should be submitted within two (2) months from the mail date of this decision and be entitled "Renewed Petition to Withdraw the Holding of Abandonment under 37 CFR 1.181." *See* 37 CFR 1.181(f).

The application was held abandoned for failure to reply in a timely manner to the Notice to File Missing Parts of Nonprovisional Application (Notice) mailed April 10, 2009, which set a shortened statutory period for reply of two (2) month. No extensions of time under the provisions of 37 CFR 1.136(a) were obtained. Accordingly, the application became abandoned on December 15, 2009.

DISCUSSION OF PETITION TO WITHDRAW THE HOLDING OF ABANDONMENT

Petitioner asserts that the Office action dated April 10, 2009, was not received.

Petitioner has also stated in the instant petition that the incorrect Customer Number was listed under the correspondence address on the Application Data Sheet (ADS) and the correct Customer Number was listed as the "patent practitioners." A review of the written record shows that, the Customer Number listed for the correspondence address, as filed by the applicant, was 02149.

A review of the record indicates no irregularity in the mailing of the Notice and the typo/mistake was the error of the petitioner. Therefore, since the Office mailed the correspondence to the address consistent with the Customer Number 02149, as specified in the ADS, there were no irregularity in the mailing. Thus, the petitioner's contention regarding the non-receipt of the Notice of April 10, 2009 is not acceptable. The application was properly abandoned for lack of reply to the Notice. Accordingly, the instant petition to withdraw the holding of abandonment cannot be granted.

ALTERNATIVE VENUE

Petitioner is strongly encouraged to consider filing a petition under 37 CFR 1.137(b) to revive an unintentionally abandoned application instead of filing a renewed petition under 37 CFR 1.181 or a petition under 37 CFR 1.137(a).

A grantable petition pursuant to 37 CFR 1.137(b) must be accompanied by:

(1) The reply required to the outstanding Office action or notice, unless previously filed. In nonprovisional utility application abandoned for failure to respond to a non-final Office action, the required reply may be met by filing either (A) an argument or amendment under 37 CFR 1.111 or (B) a continuing application under 37 CFR 1.53(b).

(2) The petition fee as set forth in 37 CFR 1.17(m), **$810 for a small entity**;

(3) A statement that the entire delay in filing the required reply from the due date for the reply until the filing of a grantable petition was unintentional. The Director may require additional information where there is a question whether the delay was unintentional.

A form for filing a petition to revive an unintentionally abandoned application accompanies this decision for petitioner's convenience. If petitioner desires to file a petition under 37 CFR 1.137(b) instead of filing a request for reconsideration, petitioner must complete the enclosed petition form (PTO/SB/64) and pay the $810 petition fee.

Further correspondence with respect to this matter should be addressed as follows:

By mail: Mail Stop Petition
Commissioner for Patents
P.O. Box 1450
Alexandria, VA 22313-1450

By FAX: (571) 273-8300
Attn: Office of Petitions

By hand: Customer Service Window
Randolph Building
401 Dulany Street
Alexandria, VA 22314

Telephone inquiries concerning this decision should be directed to JoAnne Burke at (571)272-4584.

Ramesh Krishnamurthy
Petitions Examiner
Office of Petitions

Enclosures: Petition For Revival Of An Application For Patent Abandoned Unintentionally Under 37 CFR 1.137(b); Form PTO/SB/64, Privacy Act Statement.

cc: Jon E. Holland
2101 W. Clinton Avenue, Suite 102
Huntsville, Alabama 35805

UNITED STATES PATENT AND TRADEMARK OFFICE

Commissioner for Patents
United States Patent and Trademark Office
P.O. Box 1450
Alexandria, VA 22313-1450
www.uspto.gov

LANIER FORD SHAVER & PAYNE P.C.
P O BOX 2087
HUNTSVILLE AL 35804-2087

MAILED

NOV 0 8 2010

OFFICE OF PETITIONS

In re Application of :
Marcia L. Rock et al. :
Application No. 12/414,413 : DECISION ON PETITION
Filed: March 30, 2009 :
Attorney Docket No. **09-0190.1050** :

This is a decision on the petition under the unintentional provisions of 37 CFR 1.137(b), filed September 21, 2010, to revive the above-identified application.

The application became abandoned for failure to reply in a timely manner to the Notice to File Missing Parts of Nonprovisional Application (Notice), mailed April 10, 2009. The Notice set a period for reply of two (2) months from the mail date of the Notice. No extensions of time under the provisions of 37 CFR 1.136(a) were obtained. Accordingly, the application became abandoned on June 11, 2009.

The petition satisfies the requirements of 37 CFR 1.137(b) in that petitioner has supplied (1) the reply in the form of an oath and declaration and surcharge, (2) the petition fee of $810, (3) a proper statement of unintentional delay.

The petition is hereby **GRANTED**.

It is not apparent whether the person signing the statement of unintentional delay was in a position to have firsthand or direct knowledge of the facts and circumstances of the delay at issue. Nevertheless, such statement is being treated as having been made as the result of a reasonable inquiry into the facts and circumstances of such delay. See 37 CFR 10.18(b) and Changes to Patent Practice and Procedure; Final Rule Notice, 62 Fed. Reg. 53131, 53178 (October 10, 1997), 1203 Off. Gaz. Pat. Office 63, 103 (October 21, 1997). In the event that such an inquiry has not been made, petitioner must make such an inquiry. If such inquiry results in the discovery that it is not correct that the entire delay in filing the required reply from the due date for the reply until the filing of a grantable petition pursuant to 37 CFR 1.137(b) was unintentional, petitioner must notify the Office.

There is no indication that the person signing the petition was ever given a power of attorney to prosecute the application. If the person signing the petition desires to receive future correspondence regarding this application, the appropriate power of attorney document must be submitted. While a courtesy copy of this decision is being mailed to the person signing the petition, all future correspondence will be directed to the address currently of record until appropriate instructions are received.

Telephone inquiries concerning this decision should be directed to JoAnne Burke at 571-272-4584.

This application is being referred to the Office of Patent Application Processing.

JoAnne Burke
Petitions Examiner
Office of Petitions

cc: Jon E. Holland
2101 W. Clinton Avenue, Suite 102
Huntsville, Alabama 35805