PTO/SB/20PCT-EP (05-10)
Approved for use through 01/31/2012. OMB 0651-0058
U.S. Patent and Trademark Office; U. S. DEPARTMENT OF COMMERCE
Under the Paperwork Reduction Act of 1995, no persons are required to respond to a collection of information unless it displays a valid OMB control number.

REQUEST FOR PARTICIPATION IN THE PATENT COOPERATION TREATY - PATENT PROSECUTION HIGHWAY (PCT-PPH) PILOT PROGRAM BETWEEN THE EUROPEAN PATENT OFFICE (EPO) AND THE USPTO

Application No:	12/467,431	Filing date:	May 18, 2009
First Named Inventor:	Raymond E. Davis		
Title of the Invention:	Tag Tool Protective Device, System, and Method		

THIS REQUEST FOR PARTICIPATION IN THE PCT-PPH PILOT PROGRAM ALONG WITH THE REQUIRED DOCUMENTS MUST BE SUBMITTED VIA EFS-WEB. INFORMATION REGARDING EFS-WEB IS AVAILABLE AT HTTP://WWW.USPTO.GOV/EBC/EFS_HELP.HTML

APPLICANT HEREBY REQUESTS PARTICIPATION IN THE PCT-PPH PROGRAM AND PETITIONS TO MAKE THE ABOVE-IDENTIFIED APPLICATION SPECIAL UNDER THE PCT-PPH PROGRAM.

The above-identified application is (1) a national stage entry of the corresponding PCT application, or (2) a national stage entry of another PCT application which claims priority to the corresponding PCT application, or (3) a national application that claims domestic/ foreign priority to the corresponding PCT application, or (4) a national application which forms the basis for the priority claim in the corresponding PCT application, or (5) a continuing application of a U.S. application that satisfies one of (1) to (4) above, or (6) a U.S. application that claims domestic benefit to a U.S. provisional application which forms the basis for the priority claim in the corresponding PCT application.

The corresponding PCT application number(s) is/are: PCT/US2010/035267

The international filing date of the corresponding PCT application(s) is/are: May 18, 2010

I. List of Required Documents:

a. **A copy of the latest international work product (WO/ISA, WO/IPEA, or IPER) in the above–identified corresponding PCT application(s)**

☐ Is attached

☒ Is not attached because the document is already in the U.S. application.

b. **A copy of all claims which were indicated as having novelty, inventive step and industrial applicability in the above-identified corresponding PCT application(s).**

☒ Is attached.

☐ Is not attached because the document is already in the U.S. application.

c. **English translations of the documents in a. and b. above are attached (if the documents are not in the English language). A statement that the English translation is accurate is attached for the document in b. above.**

This collection of information is required by 35 U.S.C. 119, 37 CFR 1.55, and 37 CFR 1.102(d). The information is required to obtain or retain a benefit by the public, which is to file (and by the USPTO to process) an application. Confidentiality is governed by 35 U.S.C. 122 and 37 CFR 1.11 and 1.14. This collection is estimated to take 2 hours to complete, including gathering, preparing, and submitting the completed application form to the USPTO. Time will vary depending upon the individual case. Any comments on the amount of time you require to complete this form and/or suggestions for reducing this burden should be sent to the Chief Information Officer, U.S. Patent and Trademark Office, U.S. Department of Commerce, P.O. Box 1450, Alexandria, VA 22313-1450. DO NOT SEND FEES OR COMPLETED FORMS TO THIS ADDRESS.

Approved for use through 01/31/2012. OMB 0651-0058
U.S.Patent and Trademark Office; U.S. DEPARTMENT OF COMMERCE

Under the Paperwork Reduction Act of 1995, no persons are required to respond to a collection of information unless it displays a valid OMB control number.

REQUEST FOR PARTICIPATION IN THE PCT-PPH PILOT PROGRAM BETWEEN THE EPO AND THE USPTO

(continued)

Application No.:	12/467,431
First Named Inventor:	Raymond E. Davis

d. **(1) An information disclosure statement listing the documents cited in the international work products (ISR, WO/ISA, WO/IPEA, IPER) of the corresponding PCT application.**

☐ Is attached

☒ Has already been filed in the above-identified U.S. application on September 27, 2010

(2) Copies of all documents (except) for U.S. patents or U.S. patent application publications)

☐ Are attached.

☒ Have already been filed in the above-identified U.S. application on September 27, 2010

II. Claims Correspondence Table:

Claims in US Application	Patentable Claims in the corresponding PCT Application	Explanation regarding the correspondence
1-23	1-23	US claims 1-23 are the same as the corresponding claims 1-23 in the corresponding PCT application.

III. All the claims in the US application sufficiently correspond to the patentable claims in the corresponding PCT application.

Signature /Matthew K. Wernli/	Date March 24, 2011
Name (Print/Typed) Matthew K. Wernli	Registration Number 63,173

Privacy Act Statement

The **Privacy Act of 1974 (P.L. 93-579)** requires that you be given certain information in connection with your submission of the attached form related to a patent application or patent. Accordingly, pursuant to the requirements of the Act, please be advised that: (1) the general authority for the collection of this information is 35 U.S.C. 2(b)(2); (2) furnishing of the information solicited is voluntary; and (3) the principal purpose for which the information is used by the U.S. Patent and Trademark Office is to process and/or examine your submission related to a patent application or patent. If you do not furnish the requested information, the U.S. Patent and Trademark Office may not be able to process and/or examine your submission, which may result in termination of proceedings or abandonment of the application or expiration of the patent.

The information provided by you in this form will be subject to the following routine uses:

1. The information on this form will be treated confidentially to the extent allowed under the Freedom of Information Act (5 U.S.C. 552) and the Privacy Act (5 U.S.C 552a). Records from this system of records may be disclosed to the Department of Justice to determine whether disclosure of these records is required by the Freedom of Information Act.
2. A record from this system of records may be disclosed, as a routine use, in the course of presenting evidence to a court, magistrate, or administrative tribunal, including disclosures to opposing counsel in the course of settlement negotiations.
3. A record in this system of records may be disclosed, as a routine use, to a Member of Congress submitting a request involving an individual, to whom the record pertains, when the individual has requested assistance from the Member with respect to the subject matter of the record.
4. A record in this system of records may be disclosed, as a routine use, to a contractor of the Agency having need for the information in order to perform a contract. Recipients of information shall be required to comply with the requirements of the Privacy Act of 1974, as amended, pursuant to 5 U.S.C. 552a(m).
5. A record related to an International Application filed under the Patent Cooperation Treaty in this system of records may be disclosed, as a routine use, to the International Bureau of the World Intellectual Property Organization, pursuant to the Patent Cooperation Treaty.
6. A record in this system of records may be disclosed, as a routine use, to another federal agency for purposes of National Security review (35 U.S.C. 181) and for review pursuant to the Atomic Energy Act (42 U.S.C. 218(c)).
7. A record from this system of records may be disclosed, as a routine use, to the Administrator, General Services, or his/her designee, during an inspection of records conducted by GSA as part of that agency's responsibility to recommend improvements in records management practices and programs, under authority of 44 U.S.C. 2904 and 2906. Such disclosure shall be made in accordance with the GSA regulations governing inspection of records for this purpose, and any other relevant (*i.e.*, GSA or Commerce) directive. Such disclosure shall not be used to make determinations about individuals.
8. A record from this system of records may be disclosed, as a routine use, to the public after either publication of the application pursuant to 35 U.S.C. 122(b) or issuance of a patent pursuant to 35 U.S.C. 151. Further, a record may be disclosed, subject to the limitations of 37 CFR 1.14, as a routine use, to the public if the record was filed in an application which became abandoned or in which the proceedings were terminated and which application is referenced by either a published application, an application open to public inspection or an issued patent.
9. A record from this system of records may be disclosed, as a routine use, to a Federal, State, or local law enforcement agency, if the USPTO becomes aware of a violation or potential violation of law or regulation.

(12) INTERNATIONAL APPLICATION PUBLISHED UNDER THE PATENT COOPERATION TREATY (PCT)

(19) World Intellectual Property Organization
International Bureau

(43) International Publication Date
25 November 2010 (25.11.2010)

PCT

(10) International Publication Number
WO 2010/135332 A1

(51) International Patent Classification:
B65C 7/00 (2006.01)

(21) International Application Number:
PCT/US2010/035267

(22) International Filing Date:
18 May 2010 (18.05.2010)

(25) Filing Language: English

(26) Publication Language: English

(30) Priority Data:
12/467,431 18 May 2009 (18.05.2009) US

(71) Applicant *(for all designated States except US)*: **ADCO INDUSTRIES - TECHNOLOGIES, L.P.** [US/US]; 11333 Pagemill Road, Dallas, Texas 75243 (US).

(72) Inventors; and
(75) Inventors/Applicants *(for US only)*: **DAVIS, Raymond E.** [US/US]; 1716 Bison Meadows, Heath, Texas 75032 (US). **HAMPTON, Clifton Glenn** [US/US]; 412 Kingswood, Burleson, Texas 76028 (US).

(74) Agents: **MUSSELMAN, JR., P. Weston** et al.; Fish & Richardson P.C., P.O. Box 1022, Minneapolis, Minnesota 55440-1022 (US).

(81) Designated States *(unless otherwise indicated, for every kind of national protection available)*: AE, AG, AL, AM, AO, AT, AU, AZ, BA, BB, BG, BH, BR, BW, BY, BZ, CA, CH, CL, CN, CO, CR, CU, CZ, DE, DK, DM, DO, DZ, EC, EE, EG, ES, FI, GB, GD, GE, GH, GM, GT, HN, HR, HU, ID, IL, IN, IS, JP, KE, KG, KM, KN, KP, KR, KZ, LA, LC, LK, LR, LS, LT, LU, LY, MA, MD, ME, MG, MK, MN, MW, MX, MY, MZ, NA, NG, NI, NO, NZ, OM, PE, PG, PH, PL, PT, RO, RS, RU, SC, SD, SE, SG, SK, SL, SM, ST, SV, SY, TH, TJ, TM, TN, TR, TT, TZ, UA, UG, US, UZ, VC, VN, ZA, ZM, ZW.

(84) Designated States *(unless otherwise indicated, for every kind of regional protection available)*: ARIPO (BW, GH, GM, KE, LR, LS, MW, MZ, NA, SD, SL, SZ, TZ, UG, ZM, ZW), Eurasian (AM, AZ, BY, KG, KZ, MD, RU, TJ, TM), European (AL, AT, BE, BG, CH, CY, CZ, DE, DK, EE, ES, FI, FR, GB, GR, HR, HU, IE, IS, IT, LT, LU, LV, MC, MK, MT, NL, NO, PL, PT, RO, SE, SI, SK, SM, TR), OAPI (BF, BJ, CF, CG, CI, CM, GA, GN, GQ, GW, ML, MR, NE, SN, TD, TG).

Declarations under Rule 4.17:

— *as to applicant's entitlement to apply for and be granted a patent (Rule 4.17(ii))*

— *as to the applicant's entitlement to claim the priority of the earlier application (Rule 4.17(iii))*

Published:

— *with international search report (Art. 21(3))*

(54) Title: TAG TOOL PROTECTIVE DEVICE, SYSTEM, AND METHOD

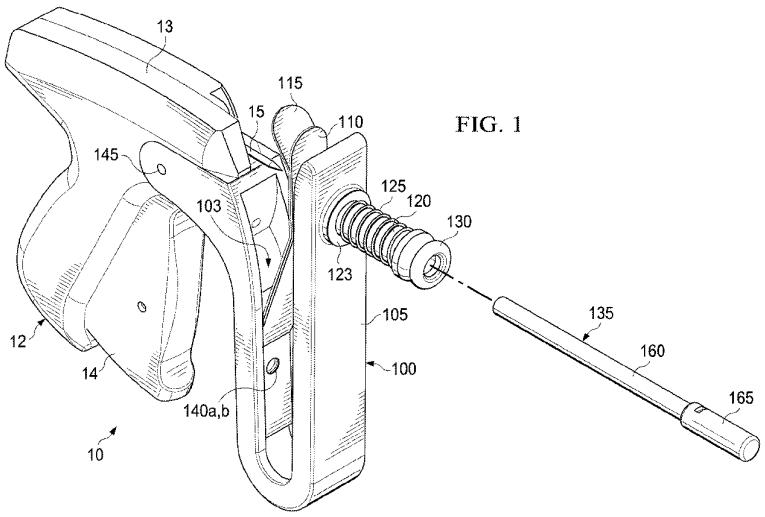

FIG. 1

(57) Abstract: A protective assembly (100) for a tag tool (12) includes a shoe (105), a shoe spring (115) coupled to the shoe, a tag spring (110), and a thimble (120). The shoe includes a shoe bore (175) extending through a distal end of the shoe, where the shoe is adapted to attach to a tag tool having a tag tool needle (15) extending from the tool. The tag spring is coupled to the shoe adjacent the shoe spring and distal ends of the shoe spring and tag spring define an opening to receive a product tag therebetween. The distal end of the tag spring and the shoe define a slot to receive a product material therebetween. The thimble is adapted to move through the shoe bore in response to a force applied to a distal end of the thimble and transmit at least a portion of the force to the tag spring and the shoe spring.

WO 2010/135332 A1

TAG TOOL PROTECTIVE DEVICE, SYSTEM, AND METHOD

CLAIM OF PRIORITY

This application claims priority to U.S. Patent Application Serial No. 12/467,431, filed on May 18, 2009, the entire contents of which are hereby incorporated by reference.

TECHNICAL FIELD

This disclosure relates to devices and systems for attaching tags to product material, and more particularly, to safety and protective devices, systems, and methods used with tag tools or tagging guns.

BACKGROUND

Various methods and devices are used for securing product tags to consumer and commercial products. In some instances, such product tags may include tags made of plastic, metal, or other hard materials, and may include one or more electronic devices used as, for example, theft prevention devices. In other instances, product tags may be made of paper, cardboard, or other more pliable material and may be used to provide identifying information regarding the product itself. As one example, product tags for clothing products may generally be paper tags identifying such information as manufacturer, size, price, as well as other information.

Clothing product tags may often be attached to the clothing item (*e.g.*, shirts, pants, socks) by a variety of techniques. For example, certain techniques utilize a device or tool called a tag tool or tagging gun. Tag tools often operate to create a small hole through the product and, in some cases, the product tag, through the use of a hollow needle or other penetrating component. Upon creation of the small hole, the tag tool may be manipulated to insert a fastener (*e.g.*, nylon, plastic) through the hollow needle and then through the holes formed in the product tag and product material. Such fasteners, typically, are flexible filaments with enlarged portions on each end. For instance, the fasteners may be shaped substantially similar to the cross-section of an "I-beam." Upon insertion of the nylon fastener through such holes, the

enlarged ends of the fastener extend, thereby securing the product tag to the product material.

Tag tools or tagging guns may come in a variety of forms. Typically, however, such tag tools may include either a fixed needle or a retractable needle. In fixed needle tag tools, for instance, product material may be manually forced over the needle by the tag tool user. In other words, fixed needle tag tools may include a hollow needle secured in the tag tool and extended from the tag tool at all times. Such fixed needle tag tools, therefore, may create safety concerns with respect to possible injuries to the tag tool user as well as possible damage to the product material. Previous solutions to such safety issues may not fully address this problem. For example, various fixed needle tag tools may include a removable cap or thimble designed to cover the needle during periods of non-use. Such caps or thimbles may be easily lost or misplaced. While some caps or thimbles may be tethered to the tag tool itself by a lanyard or string, such protection relies on the user to replace the cap or thimble on the needle after using the tag tool.

Retractable needle tag tools may generally include a hollow needle that retracts into a housing or handle of the tag tool during periods of non-use. More specifically, a user of a retractable needle tag tool may initiate an action (*e.g.*, pull a trigger or lever) that extends the needle from the tag tool and through the product material and product tag, while simultaneously forcing the product tag through the hollow needle and the resultant holes. Such tag tools, while possibly providing increased safety to user and product material, typically include greater mechanical complexity. Such complexity may decrease the reliability of the tool while increasing cost.

SUMMARY

In one general embodiment, a protective assembly for a tag tool includes a shoe, a shoe spring coupled to the shoe, a tag spring, and a thimble. The shoe includes a shoe bore extending through a distal end of the shoe, where the shoe is adapted to attach to a tag tool having a tag tool needle extending from the tool. The shoe bore has a centerline substantially aligned with a longitudinal dimension of the tag tool needle. The tag spring is coupled to the shoe adjacent the shoe spring and distal ends of the shoe spring and tag spring define an opening to receive a product tag therebetween. The distal end of the tag spring is adjacent the shoe and the distal end of the tag spring

and the shoe define a slot to receive a product material therebetween. The thimble is coupled to the shoe and adapted to move through the shoe bore in response to a force applied to a distal end of the thimble and transmit at least a portion of the force to the tag spring and the shoe spring.

In some specific embodiments, the protective assembly may further include a thimble tip coupled to the distal end of the thimble, where the thimble tip is adapted to receive the force and transmit the force to the thimble. The protective assembly may further include a thimble spring disposed over the thimble, where the thimble spring is adapted to constrict to a compressed state in response to the force applied to the thimble and extend to an uncompressed state in response to release of the force from the thimble. The thimble spring may urge the thimble through the shoe bore away from the tag spring as the thimble spring extends from the compressed state to the uncompressed state. In some aspects, the tag spring and the shoe spring may include corresponding slots substantially aligned therethrough, where the tag spring and the shoe spring may be adapted to be impaled over the tag tool needle through the corresponding slots in response to the portion of the force transmitted to the tag spring and the shoe spring from the thimble.

In particular embodiments, the tag spring and the shoe spring may be adapted to secure the product tag therebetween without support of the product tag by a user. Further, the shoe and the shoe spring may be adapted to secure the product material therebetween without support of the product material by a user.

In another general embodiment, a product tagging system includes a tag tool and a protective assembly. The tag tool includes a housing and a tag tool needle extending from the housing. The protective assembly includes a shoe, a shoe spring coupled to the shoe, a tag spring, and a thimble. The shoe is attached to the tag tool and includes a shoe bore extending through a distal end of the shoe, where the shoe bore has a centerline substantially aligned with a longitudinal dimension of the tag tool needle. The tag spring is coupled to the shoe adjacent the shoe spring and distal ends of the shoe spring and tag spring define an opening to receive a product tag therebetween. The distal end of the tag spring adjacent the shoe and the shoe define a slot to receive a product material therebetween. The thimble is coupled to the shoe and adapted to move through the shoe bore in response to a force applied to a distal end of the thimble and transmit at least a portion of the force to the tag spring and the shoe

spring to move the tag spring and the shoe spring over a sharpened end of the tag tool needle.

In specific embodiments, the product tagging system may further include a thimble tip coupled to the distal end of the thimble, where the thimble tip is adapted to receive the force and transmit the force to the thimble. The product tagging system may further include a thimble spring disposed over the thimble, where the thimble spring is adapted to constrict to a compressed state in response to the force applied to the thimble and extend to an uncompressed state in response to the force released from the thimble. The thimble spring may urge the thimble through the shoe bore away from the tag spring as the thimble spring extends from the compressed state to the uncompressed state. Further, the tag spring and the shoe spring may include corresponding slots substantially aligned therethrough, where the tag spring and the shoe spring are impaled on a portion of the tag tool needle through the corresponding slots in response to the portion of the force transmitted to the tag spring and the shoe spring from the thimble.

In particular embodiments, the tag spring and the shoe spring may be adapted to secure the product tag therebetween without support of the product tag by a user. Further, the tag spring and the shoe may be adapted to secure the product material therebetween without support of the product material by a user. In addition, the tag tool needle may be held substantially stationary in the housing as the tag spring and shoe spring move over the sharpened end of the tag tool needle.

In some embodiments, the product tagging system may further include a needle container including a tube adapted to receive at least a portion of the tag tool needle; and a cap substantially enclosing a first end of the tube. The tube may be adapted to enclose at least two tag tool needles. Further, in some embodiments of the product tagging system, at least a portion of the shoe may be integrally formed with a portion of the housing. The shoe and the housing may be integrally formed as a two-piece clam shell.

In another general implementation, a method for using a tag tool includes providing a tag tool system, where the system includes a housing; a tag tool needle extending from the housing; and a protective assembly. The protective assembly includes a shoe attached to the housing and including a shoe bore extending through a distal end of the shoe. The shoe bore has a centerline substantially aligned with a

longitudinal dimension of the tag tool needle. The assembly also includes a shoe spring coupled to the shoe and a tag spring coupled to the shoe adjacent the shoe spring, where distal ends of the shoe spring and tag spring define an opening and the distal end of the tag spring and the shoe defining a slot. The assembly also includes a thimble coupled to the shoe and having a centerline substantially aligned with the centerline of the shoe bore. The method includes applying a force to a distal end of the thimble to urge at least a portion of the thimble through the shoe bore, where the thimble transmits at least a portion of the force to the tag spring and the shoe spring to move the tag spring and the shoe spring over a sharpened end of the tag tool needle.

In certain embodiments, the method may further include inserting a product tag in the opening; securing the product tag between the tag spring and the shoe spring without additional support; inserting a product material in the slot; and securing the product material between the tag spring and the shoe without additional support. The tag tool needle may be a used tag tool needle and the method may further include replacing the used tag tool needle with a new tag tool needle without human contact of the used tag tool needle or the new tag tool needle. In some embodiments, the tag tool system may further include a needle container including a tube and a cap, where the tube has open first and second ends and the cap may be adapted to enclose one of the open first and second ends. Replacing the used tag tool needle with a new tag tool needle without human contact of the used tag tool needle or the new tag tool needle may include inserting the open first end of the tube through the shoe bore; inserting the open first end of the tube over the used tag tool needle extended from the housing; releasing at least a portion of the used tag tool needle into the tube through the open first end; and withdrawing the tube including the used tag tool needle through the shoe bore.

In particular embodiments, the needle container may further include the new tag tool needle enclosed within the tube, where the cap encloses the open second end of the tube. Replacing the used tag tool needle with a new tag tool needle without human contact of the used tag tool needle or the new tag tool needle may include removing the cap from the open second end of the tube to expose at least a portion of the new tag tool needle from the open second end; inserting the open second end of the tube through the shoe bore; securing the portion of the new tag tool needle in the housing; and withdrawing the tube through the shoe bore. Further, replacing the used

tag tool needle with a new tag tool needle without human contact of the used tag tool needle or the new tag tool needle may include replacing the used tag tool needle with a new tag tool needle without human contact of the used tag tool needle and the new tag tool needle.

Various implementations of a product tagging system according to the present disclosure may include one or more of the following features. For example, the product tagging system may help protect a user of a tag tool from injury from a sharp needle during periods of use, as well as non-use, of the tag tool. The product tagging system may decrease the chances for disease transmission among multiple users of a tag tool. The product tagging system may allow for removal of a used needle of a tag tool without any human contact with the used tag tool needle. Further, the product tagging system may allow for installation of a new needle in a tag tool without any human contact with the new tag tool needle. The product tagging system may allow for containment and transport of used tag tool needles safely without human contact with the needles. The product tagging system may also help protect a product or material from damage, such as unwanted holes, rips, tears, or other injury inflicted by a needle of a tag tool. The product tagging system may also provide for safer shipping of used and new tag tool needles, thereby decreasing injury to transport personnel and carriers.

Various implementations of a product tagging system according to the present disclosure may also include one or more of the following features. For example, the product tagging system may include a separate loading area for a product tag and product material away from an extended needle in a fixed needle tag tool. The product tagging system may allow for tagging of product material while a user maintains a safe distance from a tag tool needle. The product tagging system may allow for faster and more efficient tagging of product material with less concern for possible injury. Further, the product tagging system may help meet regulatory safety requirements imposed on a user or business enterprise. The product tagging tool may also provide for safer and more cost-effective tagging of product material using a fixed needle tag tool as compared to a retractable needle tag tool. Additionally, the product tagging system may allow for single-handed operation of a tag tool, including a fixed needle tag tool.

These general and specific embodiments may be implemented using a device, system, or method, or any combinations of devices, systems, or methods. The details of one or more embodiments are set forth in the accompanying drawings and the description below. Other features will be apparent from the description and drawings, and from the claims.

DESCRIPTION OF DRAWINGS

FIG. 1 illustrates one embodiment of a product tagging system according to the present disclosure;

FIG. 2 illustrates one embodiment of a tag tool including a protective assembly according to the present disclosure;

FIG. 3A illustrates one embodiment of a protective assembly for a tag tool according to the present disclosure;

FIG. 3B illustrates one embodiment of a tag spring and a shoe spring of a protective assembly for a tag tool according to the present disclosure; and

FIG. 4 illustrates one embodiment of a needle container of a product tagging system according to the present disclosure.

Like reference symbols in the various drawings indicate like elements.

DETAILED DESCRIPTION

This disclosure relates to devices and systems for attaching tags to product material, and more particularly, to safety and protective devices, systems, and methods used with tag tools or tagging guns. In some embodiments, a protective assembly may be attached to a fixed needle tag tool and may provide safer handling and use of the tag tool. For instance, the protective assembly may provide a shoe including one or more spring members with apertures therethrough longitudinally aligned with a needle of the tag tool. The spring members may receive a force from the tag tool user as applied to a thimble component attached to the shoe, thereby forcing a product tag and product secured within the shoe over the needle. The tag tool user may thus be protected from the needle by separating the needle from the user through implementation of the spring members, the shoe, as well as the attached thimble. Traditional techniques to secure the tag to the product with the tag tool may then be initiated.

Protective methods and systems for managing a tag tool, including replacing used tag tool needles therein, are presently disclosed. In some embodiments, a tubular container for tag tool needles may be inserted through one or more of the thimble, the shoe, and the spring members and enclose a tag tool needle secured to the tag tool. The used needle may thus be removed from the tag tool within the tubular container with little or no direct contact between the user and the used needle. A new tag tool needle may be similarly installed in the tag tool. For instance, the tubular container from which a portion of a new needle is exposed may be inserted through one or more of the thimble, the shoe, and the spring members. The new needle may then be installed and secured within the tag tool and the tubular container removed from the protective assembly.

Referring to FIGS. 1-2, one embodiment of a product tagging system 10, including a tag tool 12, a protective assembly 100, and a needle container 135, is illustrated. The product tagging system 10, generally, allows for safer and more efficient tagging of product material as compared to traditional tagging techniques, methods, and devices. Further, the product tagging system 10 may be separable so as to allow various components of the system 10 to be used with existing tagging components. For example, the protective assembly 100 may be implemented as a separate component and used with an existing tag tool, such as a tag tool distinct from that shown in FIGS. 1-2 (tag tool 12). Likewise, the needle container 135 may be used with existing tag tools and protective assemblies such as those distinct or different from the tag tool 12 and protective assembly 100 illustrated in FIGS. 1-2.

Tag tool 12, typically, is a handheld device that includes a handle 13, a trigger 14, and a needle 15. The tag tool 12 may be operated by a user to create one or more holes in a product tag and a product material and then insert a fastener (*e.g.*, a nylon "I-shaped" fastener, not shown) through such holes to secure the product tag to the product material. In some embodiments, the tag tool 12 creates aligned holes through a paper or cardboard product tag and an item of clothing and then inserts the fastener through such holes to secure the tag to the clothing. As illustrated in FIGS. 1-2, the tag tool 12 may be a fixed needle tag tool, such that the needle 15 remains extended from the housing 13 during periods of use and non-use of the tag tool 12. In alternative embodiments, however, the tag tool 12 may be a retracted needle tag tool, such that the

user can operate the tag tool 12 to extend the needle 15 from the housing 13 to engage the product tag and/or product material with the needle 15.

In some embodiments, the tag tool 12 may utilize a fine fabric fastener to attach the product tag to the product material. Alternatively, the tag tool 12 may utilize a regular fastener to attach the product tag to the product material. Regardless, reference to the tag tool 12 refers to any tag tool or product tagging device operable to attach a product tag to a product material. Further, as noted above, the tag tool 12 may be a separate component from the product assembly 100 or, alternatively, the tag tool 12 and product assembly 100 may be formed as a single, integral piece.

Needle 15, typically, is a tubular metallic component having a void, or hollow portion, extending therethrough. The needle 15 also includes a sharpened point at one distal end designed to penetrate various objects, such as product tags and product material. The needle 15, generally, includes a "C" or crescent cross-sectional area, thus exposing the hollow portion of the needle 15 while maintaining the sharpened point. For example, the needle 15 is typically sharpened so as to penetrate and extend through paper, cardboard, paperboard, cloth, and other similar material. The needle 15 also includes a second distal end opposite the sharpened end, which may be secured to the tag tool 12, thus affixing the needle 15 at a constant position relative to the housing 13. For instance, the needle 15 may include a higher diameter, notched distal end (or base) opposite the sharpened end (as shown more fully in FIG. 4), which may be secured to the tag tool 12 through a locking mechanism engaged to the notched end (base). Alternatively, the needle 15 may be affixed within the housing 13 without the notched distal end by simply providing a snug fit of the needle 15 within the housing 13. Regardless, the needle 15 is typically removable from the tag tool 12 in order to replace the needle 15, such as when it becomes dull, contaminated, or broken.

The hollow portion of the needle 15 extends to the sharpened distal end and allows the fastener to be ejected therethrough in order to secure the product tag to the product material. For example, during operation of the product tagging system 10, subsequent to the creation of one or more holes through the product tag and product material (explained more fully below with reference to FIG. 3A), the user may operate the tag tool 12 to eject the fastener through the created holes, thus securing the product tag to the product material with the fastener. For instance, the user may, typically, engage the trigger 14 of the tag tool 12 (*e.g.*, apply force to retract the trigger 14 into

the housing 13), which forces a fastener stored in the housing 13 through the hollow portion of the needle 15. Releasing the trigger 14 may then load an additional fastener stored within the housing 13 into a position ready to be ejected through the needle 15.

The needle 15, in some embodiments, may be a fine fabric needle rather than, for example, a regular fabric needle. In some embodiments, the needle 15 may thus have a decreased length and decreased diameter as compared to the regular fabric needle. In any event, reference to the needle 15 refers to any appropriate needle used with a tag tool, such as the tag tool 12, as well as any other product tagging device or system.

Protective assembly 100, typically, is secured to the tag tool 12 at one or more locations, such as at connection points 145 on either side of the housing 13. For example, the protective assembly 100 may be secured to the housing 13 at points 145 by screws, rivets, or other mechanical fastening techniques, as well as adhesives or compression fittings (*e.g.*, detents). Generally, however, the protective assembly 100 is detachable from the tag tool 12 and thus may be used with multiple tag tools 12 or alternative tag tools.

The protective assembly 100 includes a shoe 105, a tag spring 110, a shoe spring 115, and a thimble 120. In some embodiments, the protective assembly 100 may also include a thimble tip 130 and a thimble spring 125. During typical operation (explained more fully with reference to FIG. 3A), the protective assembly 100 allows the user to apply force to the thimble 120 so as to force a product tag and product material over the needle 15, thereby impaling the product tag and the product material on the needle 15. In doing so, the protective assembly 100 may allow the user and the product material to avoid unwanted and harmful contact with the needle 15.

The shoe 105, typically, is made of plastic, aluminum, or other rigid material and extends from the tag tool 12 from the connection points 145 on either side of the housing 13. As illustrated, the shoe 105 is substantially U-shaped and extends downward from the tag tool 12, thus creating an area to receive product material. The shoe 105, further, extends upward in front of the needle 15 and includes a shoe bore 175 therethrough. The shoe bore 175, typically, is aligned with the needle 15 such that a centerline 173 (shown in FIG. 3A) traversing through the shoe bore 175 is aligned with the needle 15.

In some embodiments, the shoe 105 and the housing 13 are integrally formed as a single or multi-piece structure. For example, the shoe 105 and the housing 13 may be integrally formed as a two-piece, or clam shell, structure such that the two halves of the structure are secured together to form the shoe 105 and housing 13 as a single component of the product tagging system 10. The shoe 105 and housing 13 may be secured by any appropriate technique, including mechanical (*e.g.*, rivets, screws, or pin and socket), as well as adhesives.

In some embodiments, the shoe 105 includes a recessed channel 103 (shown in FIG. 2) extending around all or a portion of an interior surface of the shoe 100. The recessed channel 103 may provide for a seating area in which one or both of the tag spring 110 and the shoe spring 115 may be inserted and secured to the shoe 105. Further, the recessed channel 103 may provide for a lighter and less costly shoe 100, thereby increasing the ease of connection of the shoe 100 to the housing 13, for example.

The shoe spring 115 is secured to the shoe 100 through a spring bore 140a (*e.g.*, by rivet or screw) and, generally, is a leaf-type spring made of a flexible but rigid material such as, for example, steel, aluminum, plastic, or other appropriate material. The shoe spring 115 establishes a neutral loading area in front of the needle 15 that separates the product tag and product material from the needle 15. This area may be adjusted according to the shoe spring 115. For instance, the shoe spring 115 may include multiple (*e.g.*, three) angled segments in which at least one segment is angled away from the needle 15 to create the loading area. By adjusting the angles between the segments of the shoe spring 115, this area may be increased or decreased.

The shoe spring 115 typically includes a notch 170a formed therein, as illustrated in FIGS. 2 and 3B. The notch 170a, while illustrated as a cut-out or crescent-shaped aperture through the shoe spring 115, may be any appropriately shaped aperture that allows the needle 15 to pass through the shoe spring 115 during operation of the product tagging system 10. For example, the notch 170a may be a circular aperture through the shoe spring 115 with a center of the circle substantially aligned with the needle 15. The notch 170a, however, may typically extend to an exterior edge of the shoe spring 115.

The tag spring 110 is secured to the shoe 100 through a spring bore 140b (*e.g.*, by rivet or screw) and, generally, is a leaf-type spring made of a flexible but rigid

material such as, for example, steel, aluminum, plastic, or other appropriate material. As illustrated, the tag spring 110 is secured to the shoe 100 immediately adjacent the shoe spring 115 such that the shoe spring 115 is between the tag spring 110 and the needle 115. In some embodiments, the tag spring 110 and shoe spring 115 are in physical contact through at least a portion of the lengths of the springs 110 and 115. Further, the tag spring 110 may apply a spring force against the shoe spring 115, thereby maintaining physical contact between the springs 110 and 115. Alternatively, the tag spring 110 and shoe spring 115 may not contact each other but may have a relatively small clearance therebetween, thereby allowing a product tag to be secured and held steady between the springs 110 and 115.

The tag spring 115 typically includes a notch 170b formed therein, as illustrated in FIGS. 2 and 3B, similar to or substantially the same as the notch 170a in the shoe spring 115. The notches 170a and 170b, however, may be distinct as long as each allows the needle 15 to penetrate through their respective springs 110 and 115 and a fastener to be removed therethrough. The notches 170a and 170b may also, in some embodiments, serve as a target guide to locate an exact penetration location of the product tag by the needle 15 and also an exact penetration location of the fastener through the product tag and product material.

Turning to FIG. 3B, this figure illustrates in more detail one embodiment of the tag spring 110 and the shoe spring 115 of the protective assembly 100. As illustrated, the springs 110 and 115 may be substantially similar in shape and design, including multiple segments therein. When coupled to the shoe 100, such segments may be substantially aligned (as shown according to the connecting dashed lines), thereby allowing the springs 110 and 115 to be in close proximity or in contact. In some embodiments, as illustrated in FIGS. 1-2 and 3A-B, the shoe spring 115 may include a top segment angled so as to create a concave or V-shaped area to receive the product tag therein. Alternatively, the shoe spring 115 and tag spring 110 may remain in close proximity or physical contact throughout the lengths of the springs 110 and 115.

The combination of the springs 110 and 115, in some embodiments, may combine to form a product tag holder. For example, the product tag holder may serve as a guard for the user of the tag tool 12 to prevent contact with the point of the needle 15. The product tag holder may also serve as a separator from the product material to which the product tag is being attached. The product tag holder may also create a

clearance for the product material such that the user may more easily locate a desired penetration point for the fastener through the product tag and the product material. In some embodiments, the product tag holder may also assist in the removal of the product material from the needle 15, allowing the user to disconnect the fastener and tag. For instance, by pushing the product material off the needle 15, the product tag holder may create a clearance for removal of the product material as it is removed from the shoe 105. In other words, the product tag holder may act as a "spring" to help push the product material off of the needle 15 while protecting the user.

Returning to FIGS. 1-2, the thimble 120, as illustrated, is a substantially cylindrical and elongated tube coupled to the shoe 100. In some embodiments, as illustrated in these figures, the thimble 120 may be coupled to the shoe 100 through a grommet 123. Generally, as described more fully with reference to FIG. 3A, the thimble 120 may receive a force (*e.g.*, applied by the user or applied by another object or surface) and extend through the shoe bore 175 to transmit the force to the springs 110 and 115. More specifically, the thimble 120 may provide a safe (*i.e.*, non-sharpened or rounded) location on which the user may manually apply the force in order to impale the needle 15 through the thimble 120 and the springs 110 and 115, as well as the product tag and product material inserted therein. Thus, the user may be kept a safe distance from the sharpened end of the needle 15.

In some embodiments, the thimble 120 may include an indexing notch 127 disposed lengthwise along at least a portion of an outer surface of the thimble 120. In such embodiments, the shoe bore 175 may include an indexing rib 129 disposed on an outer surface of the shoe 105 through the shoe bore 175. When a force is applied to the thimble 120 to urge the thimble 120 through the shoe bore 175, the indexing rib 129 may generally mate with the indexing notch 127 to allow the thimble 120 to slide through the bore 175. Misalignment of the indexing notch 127 with the indexing rib 129 may thus prevent or substantially prevent the thimble 120 from sliding through the shoe bore 175 and thus transferring the force to the springs 110 and 115. Thus, in some embodiments of the protective assembly 100, the thimble 120 is aligned with the shoe bore 175 such that the indexing notch 127 and indexing rib 129 are in substantially constant alignment, allowing the thimble 120 to travel through the shoe bore 175.

In some alternative embodiments, such a mating between the thimble 120 and the shoe 105 to effectuate this transfer of force may be used as a locking technique for the product tagging system 10. For example, use of the protective assembly 100 and tag tool 12 may be restricted, thereby preventing one or more holes to be created in the product tag and product material by the needle 15, when the indexing rib 129 and indexing notch 127 are misaligned.

In other alternative embodiments, this locking technique may be accomplished in a different fashion. For example, the shoe bore 175 and thimble 120 may each have a substantially square, triangular, pentagonal, or octagonal cross-section (to name but a few), thus requiring alignment of the cross-sections between the shoe bore 175 and thimble 120 in order for the thimble 120 to be urged through the shoe bore 175. In other embodiments, however, the locking technique may not be included and the thimble 120 may be urged through the shoe bore 175 without substantially any indexing.

The protective assembly 100, as illustrated, may also include a thimble tip 130 coupled to thimble 120 at a distal end of the thimble 120 opposite the shoe 105. The thimble tip 130, generally, may provide a location for the user to apply a force to the thimble 120 substantially directed along the centerline 173 of the thimble 120. Further, the thimble tip 130 may be a rubber or plastic bumper that is snap-fit on the distal end of the thimble 120 and elastic so as to provide a protective surface to the user or any other object utilized to apply the force to the thimble 120. In some embodiments, as illustrated by section 'A-A' in FIG. 3A, the thimble tip 130 fits on and provides a skirt over the thimble spring 125.

The thimble spring 125, typically, is a metal or plastic wire compression spring disposed over the thimble 120 and in compression to urge the thimble 120 away from the springs 110 and 115 and the needle 15 and through the shoe bore 175 to its rest position. In some embodiments, the thimble spring 125 may continuously apply a spring force to the thimble 120 away from the needle 15. In other embodiments, however, the thimble spring 125 may come to a neutral state while the thimble 120 is in the rest position and thereby apply substantially no force to the thimble 120. In some embodiments, the thimble spring 125 is plumb at each of its ends and applies the spring force to the thimble tip 130, which is then transmitted to the thimble 120.

Alternatively, the thimble spring 125 may be directly coupled to the thimble 120 thereby directly applying the spring force to the thimble 120.

Referring now to FIGS. 1 and 4, the needle container 135 is illustrated. The needle container 135 includes a tube 160, one or more caps 165, and in some embodiments, a new needle 150. The needle container 135, typically, allows a user to remove a used tag tool needle, such as used needle 155 or the needle 15, from a tag tool, such as tag tool 12, without any contact with the used needle 155. Further, the needle container 135 allows the user to install the new needle 150 into the housing 13 of the tag tool 12 without any contact with the new needle 150. In such fashion, the needle container 135 may substantially reduce the risk of disease transmission through human contact with a contaminated tag tool needle, as well as reduce the risk of injury to the user from a new tag tool needle.

The tube 160 typically is an elongated and hollow container sized to accept a tag tool needle therein via one or both open ends of the tube 160. In some embodiments, the tube 160 may serve as a shipping and handling container, and be used in multiple instances to transport the new needle 150 and/or the used needle 155. In alternative embodiments, the tube 160 may be a disposable container that allows for safe disposal of the used needle 155. As illustrated, the tube 160 may be translucent and include an indexing notch 153 disposed longitudinally along at least a portion of an outer surface of the tube 160. The indexing notch 153, in some embodiments, may mate with the indexing rib 129 of the shoe 105 during removal of the used needle 155 and installation of the new needle 150, as described more fully below. Alternatively, the tube 160 may include a substantially smooth outer surface. Although a cylindrical shape is illustrated in FIGS. 1 and 4 for the tube 160, alternative shapes are contemplated by the present disclosure.

The tube 160 receives one or more used tag tool needles 155 and one or more new tag tool needles 150 therein. In some embodiments, the tube 160 may also include an indexing feature to secure one or more of the used and/or new tag tool needles 155 and 150 therein. For instance, in some embodiments, the tube 160 may include an internal indexing rib or guide (not shown) to mate with the “C” or crescent-shaped distal end of the used and new tag tool needles 155 and 150, as well as the needle 15. Thus, alignment of the needles to insert into the tube 160, such as during removal of the used needle 155 and installation of the new needle 150, may be made

easier and more reliable. In alternative embodiments, however, the tube 160 may be sized to snugly accept the used needle 155 and the new needle 150 and substantially secure the needles within the tube 160 without an indexing feature.

In some embodiments, one or both of the used needle 155 and new needle 150 may include a base portion. For example, as illustrated in FIG. 4, the new needle 150 may include a base portion 152 while the used needle 155 may include a base portion 157. The base portions 152 and 157 may be permanently or semi-permanently attached to the sharpened portions of the corresponding needles and provide an increased diameter segment. In some embodiments, the base portions 152 and 157 extend to the exterior of the tube 160 when the needles 150 and 155, respectively, are inserted into the tube 160.

The needle container 135 also includes one or more caps 165. The cap 165, generally, may be fit over either of the open ends of the tube 160, thereby substantially preventing accidental or unwanted removal of the used needle 155 and/or new tag tool needle 150 from the tube 160. In some embodiments, the needle container 135 includes a single cap 165, which initially encloses the tube 160 such that the new needle 150 remains therein. Once the used needle 155 is recovered from the tag tool 12, the cap 165 may be removed from the tube 160, thereby uncovering the new needle 150, and replaced onto the tube 160 to enclose the used needle 155 therein. In some embodiments, the cap 165 may be removable from one of the open ends of the tube 160 where the new needle 150 is stored but permanently attached to the tube 160 once engaged with the tube 160 over the other open end where the used needle 155 is stored.

Continuing with FIGS. 1 and 4, one example of a hands-free operation to replace the used needle 155 with the new needle 150 is now described. This example operation may allow a tag tool user to replace the used needle 155 with a new needle 150 without any direct contact with either the used needle 155 or new needle 150, thereby substantially decreasing the risk of injury. Utilizing the tube 160 with an uncapped open end directed towards the thimble tip 130 and a capped closed end enclosing the new needle 150, the user inserts the tube 160 through the thimble tip 130 and the thimble 120, which have substantially aligned bores therethrough. Thus, the thimble 120 and the thimble tip 130 may serve as guides for the tube 160 to be aligned therethrough and, eventually, over the used needle 155.

The tube 160 is then inserted through the shoe bore 175 and corresponding notches 170a and 170b of the shoe spring 115 and tag spring 110, respectively. In some embodiments, prior to insertion of the tube 160 into the shoe bore 175, the tube 160 may be indexed (*e.g.*, rotated) to allow the indexing notch 153 (shown in FIG. 4) to align with the indexing rib 129. The tube 160 is then inserted over the used needle 155 (such as needle 15). If the tube 160 includes an indexing feature, such as the indexing feature described above, the user manipulates (*e.g.*, rotates) the tube 160 to properly index the used needle 155 into the tube 160. Alternatively, if the tube 160 does not include an indexing feature, the tube 160 is slid over the used needle 155 and enclosed therein. The used needle 155, if appropriate, is then released from the tag tool 12 by the user. For example, in some embodiments, the tag tool 12 includes a locking mechanism, which secures the base 157 of the used needle 155 into the housing 13.

Once the used needle 155 is secured within the tube 160, the user withdraws the tube 160 backwards through the notches 170a and 170b, the shoe bore 175, the thimble 120, and the thimble tip 130. The user may then remove the cap 165 from the end of the tube 160 enclosing the new needle 150 and replace the cap 165 onto the tube 160 to enclose the used needle 155. Next, the user rotates the tube 160 and reinserts the tube 160 through the thimble tip 130, thimble 120, shoe bore 175, and notches 170a and 170b. The user then aligns the new needle 150 such that the housing 13 receives the base portion 152 therein. Once inserted, the new needle 150 may be locked into the housing 13 and the tube 160 withdrawn from the protective assembly 100.

Turning now to FIG. 3A, one example operation and use of the protective assembly 100 of the tag tool 12 is now described. In no particular order, the user inserts a product tag 205 into the loading angle defined by the shoe spring 115 and the tag spring 110 and a product material 200 into the loading space defined by the tag spring 110 and the shoe 105 adjacent the shoe bore 175. The user may position the product tag 205 between the tag spring 110 and shoe spring 115 substantially aligned with the centerline 173 of the shoe bore 175 and the thimble 120. Due to the close proximity of the tag spring 110 and the shoe spring 115, as well as, in some embodiments, the spring force applied by the tag spring 110 to the shoe spring 115, the product tag 205 may be secured therebetween without further support by the user.

Further, due to the close proximity of the tag spring 110 and the shoe 105 adjacent the shoe bore 175, the product material 200 may be substantially secured therebetween without further support by the user.

When the product tag 205 and the product material 200 are properly placed within the protective assembly 100, the user may apply a force F to the thimble 120 via the thimble tip 130. In some embodiments, the user may manually apply the force F (*e.g.*, by pressing with one or both hands). Alternatively, the user may employ a separate object or surface to apply the force F to the thimble 120. In any event, at least one or both of the thimble tip 130 and the thimble 120 may allow for a greater force F to be applied by the user to impale the product material 200 and the product tag 205 over the needle 15. Thus, in some embodiments, product tag attachment may be achieved for thicker product material and/or product tags as compared to product tag attachment techniques lacking the protective assembly 100.

In some embodiments, prior to applying the force F, the user may index the thimble 120 with the shoe bore 175 by, for example, rotating the thimble 120 such that the indexing notch 127 may be aligned with the indexing rib 129.

As the force F is applied in sufficient magnitude, the thimble 120 is urged from its rest position through the shoe bore 175 and contacts the product material 200. The thimble 120 continues to press the product material 200 against the tag spring 110 and transfer at least a portion of the force F to the tag spring 110 through the material 200. The force F is thus transferred (in part or in whole) to the shoe spring 115 through the product tag 205, causing the product material 200, the tag spring 110, the product tag 205, and the shoe spring 115 to be urged in the same direction as the force F (left-to-right as illustrated in this example). The product tag 205 and product material 200 are thus impaled against the needle 15 (shown in FIGS. 1-2), creating a hole therethrough, as the needle 15 traverses through the notches 170a and 170b of the shoe spring 115 and tag spring 110, respectively, as well as the thimble 120.

Once holes are created in the product tag 205 and the product material 200 by the needle 15, the tag tool 12 may be operated to insert the nylon fastener through the holes, thereby securing the product tag 205 to the product material 200. The force F may be removed from the thimble 120, thereby allowing the thimble 120, tag spring 110, and shoe spring 115 to return to their respective rest positions. Such return may allow the needle 15 to disengage from the product material 200 and the product tag

205, leaving the nylon fastener securing the material 200 and tag 205 together. The tagged product material 200 may then be removed from the protective assembly 100 such that the fastener is removed through the open notches 170a and 170b of the springs 115 and 110.

In such fashion, the user may more efficiently and more safely secure the product tag 205 to the product material 200. For instance, during this example operation, the user may keep a relatively safe distance away from the needle 15. Further, the user may be able to perform this example operation single-handedly or substantially single-handedly. Those skilled in the art will appreciate other advantages of this example operation and will appreciate that the steps described in this example operation may be performed in sequences different to that described herein. In addition, those of skill in the art will appreciate that additional steps or less steps may be performed in this example operation or other example operations without departing from the scope of the present disclosure.

A number of implementations have been described, and several others have been mentioned or suggested. Furthermore, those skilled in the art will readily recognize that a variety of additions, deletions, alterations, and substitutions may be made to these implementations without departing from the scope of the present disclosure. Thus, the scope of protected subject matter should be judged based on the following claims, which may capture one or more aspects of one or more implementations.

WHAT IS CLAIMED IS:

1. A protective assembly for a tag tool comprising:

a shoe comprising a shoe bore extending through a distal end of the shoe, the shoe adapted to attach to a tag tool having a tag tool needle extending from the tool, the shoe bore having a centerline substantially aligned with a longitudinal dimension of the tag tool needle;

a shoe spring coupled to the shoe;

a tag spring coupled to the shoe adjacent the shoe spring, wherein distal ends of the shoe spring and tag spring define an opening to receive a product tag therebetween, the distal end of the tag spring adjacent the shoe, the distal end of the tag spring and the shoe defining a slot to receive a product material therebetween; and

a thimble coupled to the shoe and adapted to move through the shoe bore in response to a force applied to a distal end of the thimble and transmit at least a portion of the force to the tag spring and the shoe spring.

2. The protective assembly of claim 1, further comprising a thimble tip coupled to the distal end of the thimble, the thimble tip adapted to receive the force and transmit the force to the thimble.

3. The protective assembly of claim 1, further comprising a thimble spring disposed over the thimble, the thimble spring adapted to constrict to a compressed state in response to the force applied to the thimble and extend to an uncompressed state in response to release of the force from the thimble, the thimble spring urging the thimble through the shoe bore away from the tag spring as the thimble spring extends from the compressed state to the uncompressed state.

4. The protective assembly of claim 1, the tag spring and the shoe spring comprising corresponding slots substantially aligned therethrough, the tag spring and the shoe spring adapted to be impaled over the tag tool needle through the corresponding slots in response to the portion of the force transmitted to the tag spring and the shoe spring from the thimble.

5. The protective assembly of claim 1, wherein the tag spring and the shoe spring are adapted to secure the product tag therebetween without support of the product tag by a user.

6. The protective assembly of claim 1, wherein the shoe and the shoe spring are adapted to secure the product material therebetween without support of the product material by a user.

7. A product tagging system comprising

a tag tool comprising a housing and a tag tool needle extending from the housing; and

a protective assembly comprising:

a shoe attached to the tag tool and comprising a shoe bore extending through a distal end of the shoe, the shoe bore having a centerline substantially aligned with a longitudinal dimension of the tag tool needle;

a shoe spring coupled to the shoe;

a tag spring coupled to the shoe adjacent the shoe spring, wherein distal ends of the shoe spring and tag spring define an opening to receive a product tag therebetween, the distal end of the tag spring adjacent the shoe, the distal end of the tag spring and the shoe defining a slot to receive a product material therebetween; and

a thimble coupled to the shoe and adapted to move through the shoe bore in response to a force applied to a distal end of the thimble and transmit at least a portion of the force to the tag spring and the shoe spring to move the tag spring and the shoe spring over a sharpened end of the tag tool needle.

8. The product tagging system of claim 7, further comprising a thimble tip coupled to the distal end of the thimble, the thimble tip adapted to receive the force and transmit the force to the thimble.

9. The product tagging system of claim 7, further comprising a thimble spring disposed over the thimble, the thimble spring adapted to constrict to a compressed state in response to the force applied to the thimble and extend to an uncompressed state in response to the force released from the thimble, the thimble spring urging the thimble through the shoe bore away from the tag spring as the thimble spring extends from the compressed state to the uncompressed state.

10. The product tagging system of claim 7, the tag spring and the shoe spring comprising corresponding slots substantially aligned therethrough, wherein the tag spring and the shoe spring are impaled on a portion of the tag tool needle through the corresponding slots in response to the portion of the force transmitted to the tag spring and the shoe spring from the thimble.

11. The product tagging system of claim 7, wherein the tag spring and the shoe spring are adapted to secure the product tag therebetween without support of the product tag by a user.

12. The product tagging system of claim 7, wherein the tag spring and the shoe are adapted to secure the product material therebetween without support of the product material by a user.

13. The product tagging system of claim 7, wherein the tag tool needle is held substantially stationary in the housing as the tag spring and shoe spring move over the sharpened end of the tag tool needle.

14. The product tagging system of claim 7 further comprising a needle container, the needle container comprising:

a tube adapted to receive at least a portion of the tag tool needle; and

a cap substantially enclosing a first end of the tube.

15. The product tagging system of claim 14, wherein the tube is adapted to enclose at least two tag tool needles.

16. The product tagging system of claim 7, wherein at least a portion of the shoe is integrally formed with a portion of the housing.

17. The product tagging system of claim 16, wherein the shoe and the housing are integrally formed as a two-piece clam shell.

18. A method for using a tag tool comprising:

providing a tag tool system comprising:

a housing;

a tag tool needle extending from the housing; and

a protective assembly comprising:

a shoe attached to the housing and comprising a shoe bore extending through a distal end of the shoe, the shoe bore having a centerline substantially aligned with a longitudinal dimension of the tag tool needle;

a shoe spring coupled to the shoe;

a tag spring coupled to the shoe adjacent the shoe spring, wherein distal ends of the shoe spring and tag spring define an opening, the distal end of the tag spring adjacent the shoe, the distal end of the tag spring and the shoe defining a slot; and

a thimble coupled to the shoe and having a centerline substantially aligned with the centerline of the shoe bore; and

applying a force to a distal end of the thimble to urge at least a portion of the thimble through the shoe bore, wherein the thimble transmits at least a portion of the force to the tag spring and the shoe spring to move the tag spring and the shoe spring over a sharpened end of the tag tool needle.

19. The method of claim 18 further comprising:

inserting a product tag in the opening;

securing the product tag between the tag spring and the shoe spring without additional support;

inserting a product material in the slot; and

securing the product material between the tag spring and the shoe without additional support.

20. The method of claim 18, the tag tool needle comprising a used tag tool needle, the method further comprising replacing the used tag tool needle with a new tag tool needle without human contact of the used tag tool needle or the new tag tool needle.

21. The method of claim 20, the tag tool system further comprising a needle container including a tube and a cap, the tube having open first and second ends, the cap adapted to enclose one of the open first and second ends, wherein replacing the used tag tool needle with a new tag tool needle without human contact of the used tag tool needle or the new tag tool needle comprises:

inserting the open first end of the tube through the shoe bore;

inserting the open first end of the tube over the used tag tool needle extended from the housing;

releasing at least a portion of the used tag tool needle into the tube through the open first end; and

withdrawing the tube including the used tag tool needle through the shoe bore.

22. The method of claim 21, the needle container further comprising the new tag tool needle enclosed within the tube, the cap enclosing the open second end of the tube, wherein replacing the used tag tool needle with a new tag tool needle without human contact of the used tag tool needle or the new tag tool needle comprises:

removing the cap from the open second end of the tube to expose at least a portion of the new tag tool needle from the open second end;

inserting the open second end of the tube through the shoe bore;

securing the portion of the new tag tool needle in the housing; and

withdrawing the tube through the shoe bore.

23. The method of claim 20, wherein replacing the used tag tool needle with a new tag tool needle without human contact of the used tag tool needle or the new tag tool needle comprises replacing the used tag tool needle with a new tag tool needle without human contact of the used tag tool needle and the new tag tool needle.

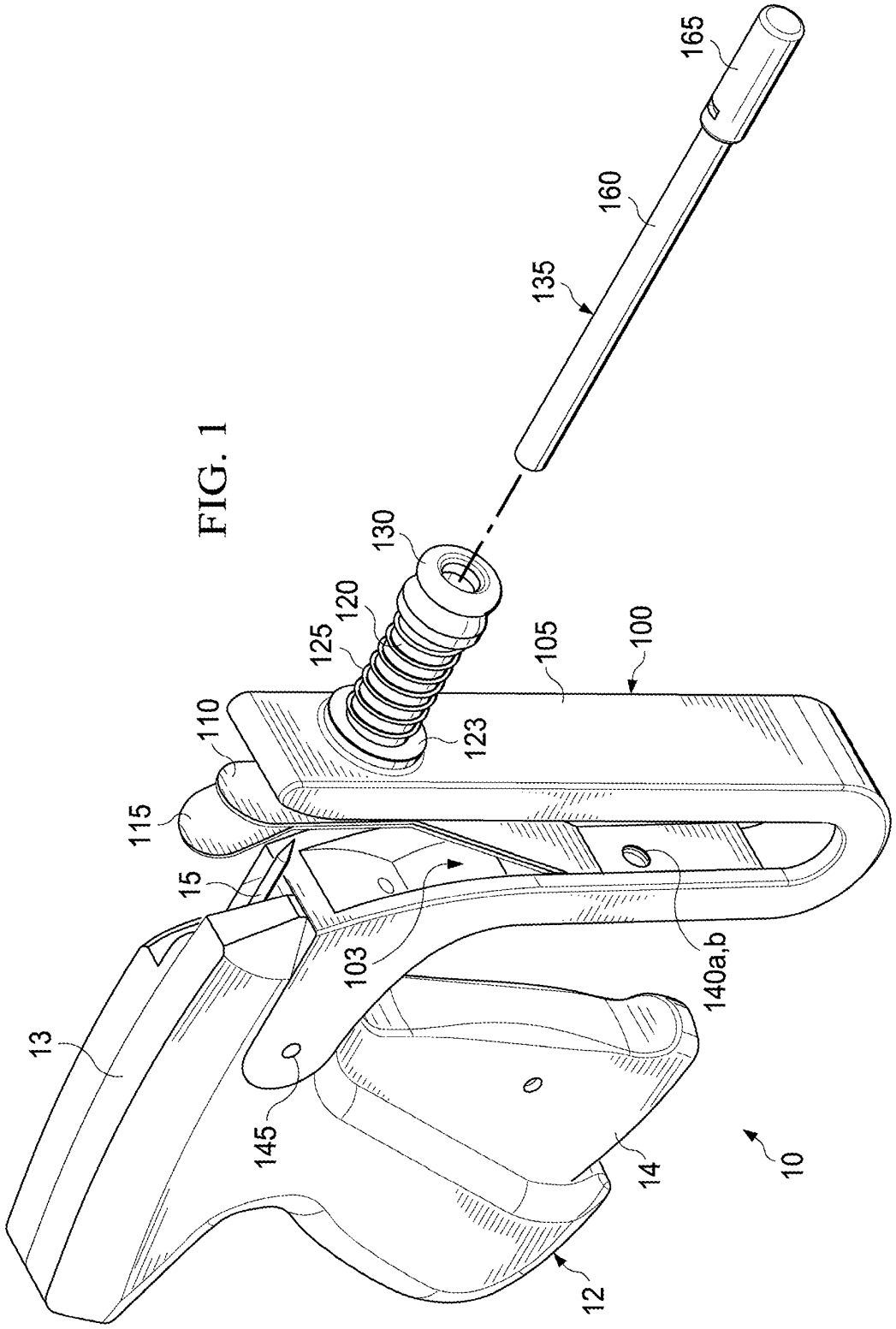
165
160
135
130
120
125
105
100
110
123
115
15
103
140a,b
13
145
14
10
12

FIG. 1

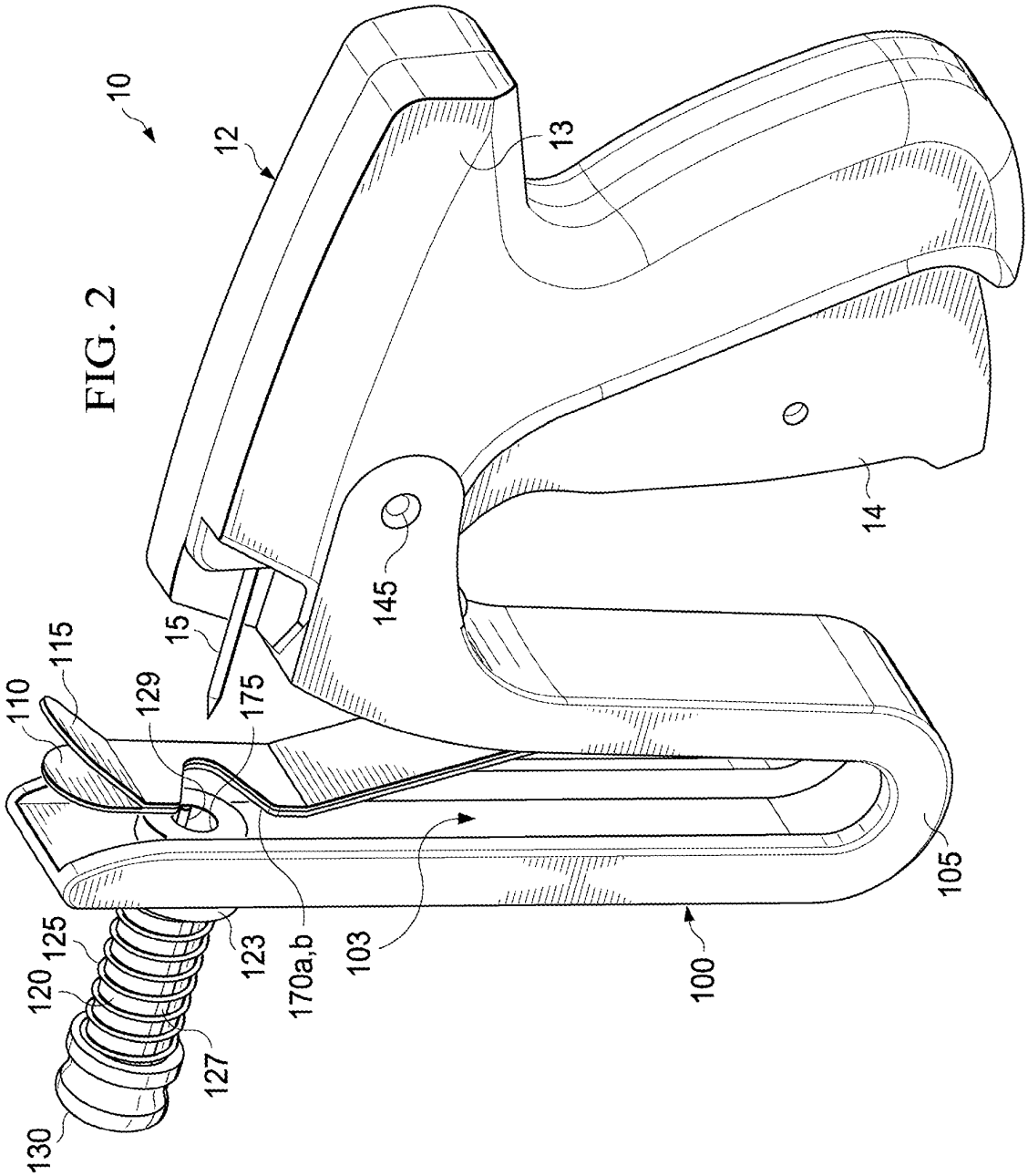
10
12
13
14
15
100
103
105
110
115
120
123
125
127
129
130
145
170a,b
175

FIG. 2

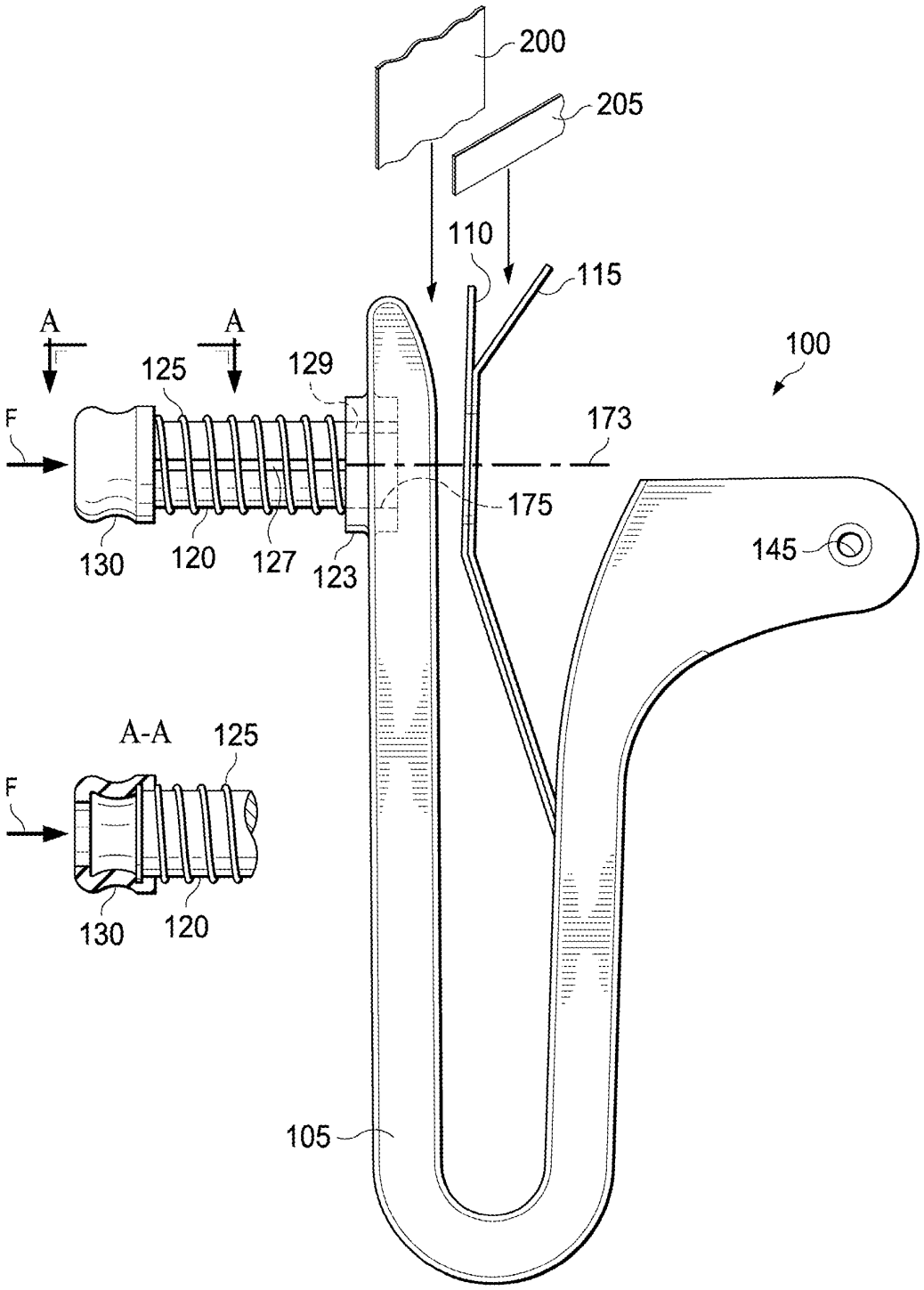
200
205
110
115
100
A
A
125
129
F
173
175
130
120
127
123
145
A-A
125
F
130
120
105

FIG. 3A

FIG. 3B

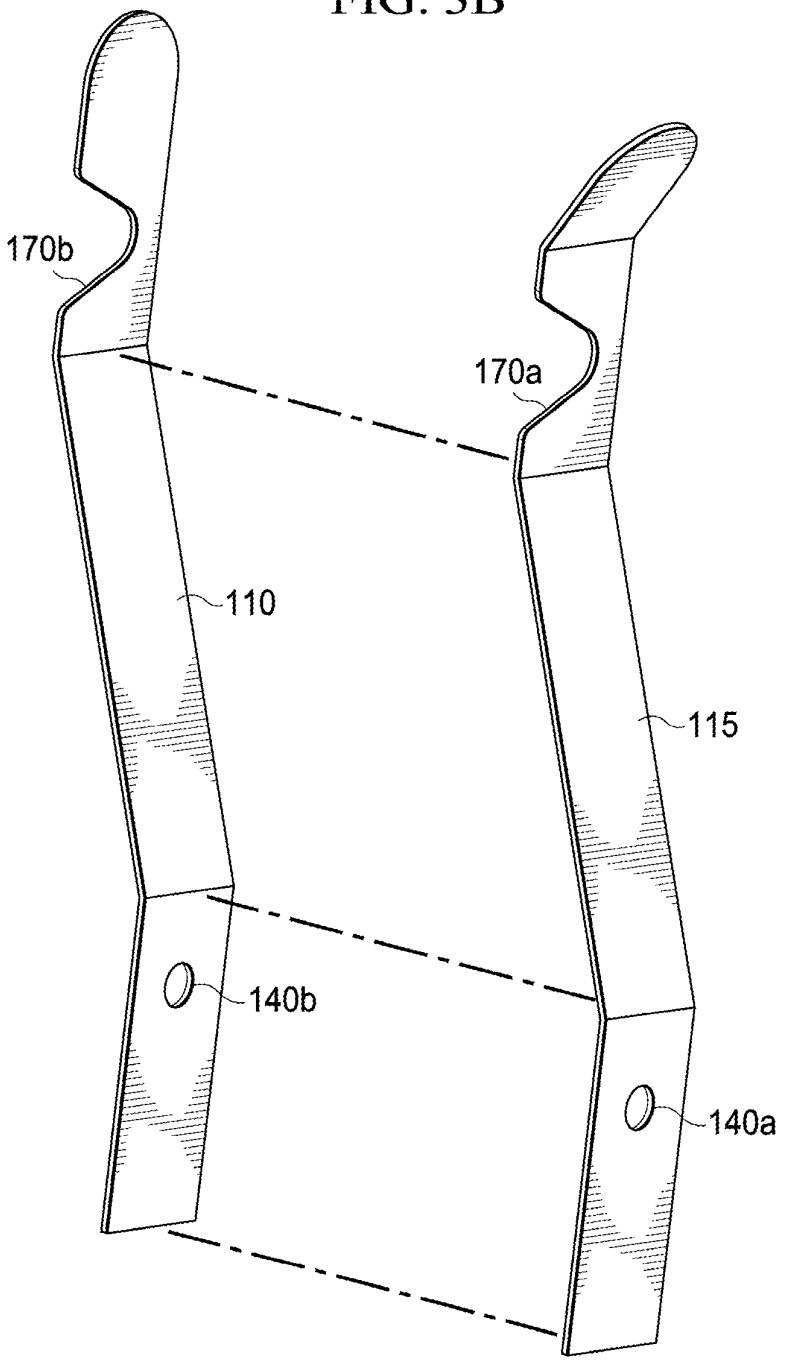

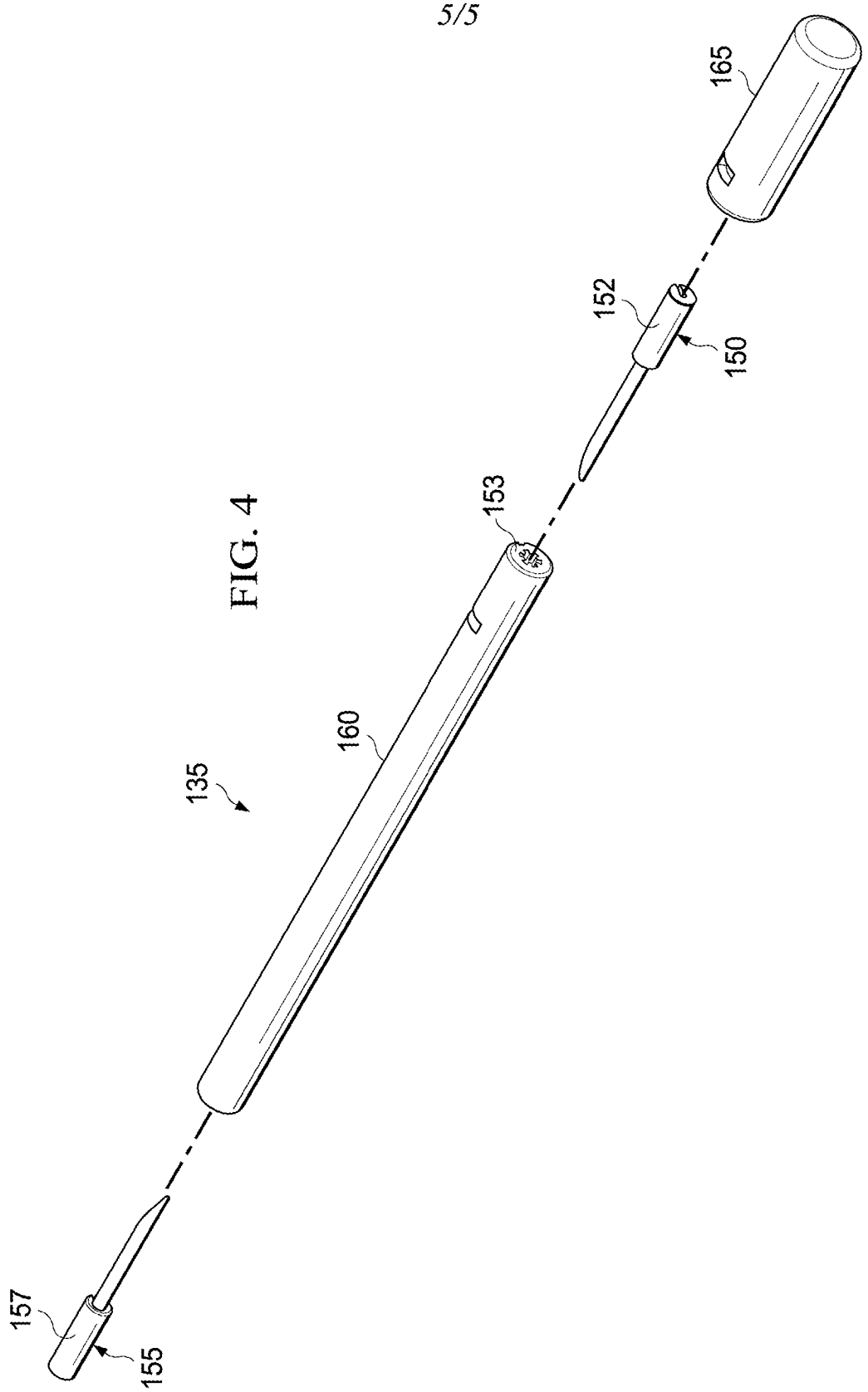

FIG. 4

INTERNATIONAL SEARCH REPORT

International application No
PCT/US2010/035267

A. CLASSIFICATION OF SUBJECT MATTER
INV. B65C7/00
ADD.

According to International Patent Classification (IPC) or to both national classification and IPC

B. FIELDS SEARCHED

Minimum documentation searched (classification system followed by classification symbols)
B65C

Documentation searched other than minimum documentation to the extent that such documents are included in the fields searched

Electronic data base consulted during the international search (name of data base and, where practical, search terms used)

EPO-Internal

C. DOCUMENTS CONSIDERED TO BE RELEVANT

Category*	Citation of document, with indication, where appropriate, of the relevant passages	Relevant to claim No.
A	DE 36 25 481 A1 (SCHIESSER AG [DE]) 11 February 1988 (1988-02-11) column 6, line 46 - column 7, line 8; figures 1-8	1,7,18
A	US 5 472 130 A (BERINGHAUSE GERALD D [US] ET AL) 5 December 1995 (1995-12-05) column 4, line 15 - line 58; figures 1-4	1,7,18

☐ Further documents are listed in the continuation of Box C.

☒ See patent family annex.

* Special categories of cited documents :

"A" document defining the general state of the art which is not considered to be of particular relevance

"E" earlier document but published on or after the international filing date

"L" document which may throw doubts on priority claim(s) or which is cited to establish the publication date of another citation or other special reason (as specified)

"O" document referring to an oral disclosure, use, exhibition or other means

"P" document published prior to the international filing date but later than the priority date claimed

"T" later document published after the international filing date or priority date and not in conflict with the application but cited to understand the principle or theory underlying the invention

"X" document of particular relevance; the claimed invention cannot be considered novel or cannot be considered to involve an inventive step when the document is taken alone

"Y" document of particular relevance; the claimed invention cannot be considered to involve an inventive step when the document is combined with one or more other such documents, such combination being obvious to a person skilled in the art.

"&" document member of the same patent family

Date of the actual completion of the international search	Date of mailing of the international search report
25 August 2010	01/09/2010

Name and mailing address of the ISA/	Authorized officer
European Patent Office, P.B. 5818 Patentlaan 2 NL - 2280 HV Rijswijk Tel. (+31-70) 340-2040, Fax: (+31-70) 340-3016	Wartenhorst, Frank

INTERNATIONAL SEARCH REPORT

Information on patent family members

International application No
PCT/US2010/035267

Patent document cited in search report		Publication date	Patent family member(s)	Publication date
DE 3625481	A1	11-02-1988	NONE	
US 5472130	A	05-12-1995	NONE	

UNITED STATES PATENT AND TRADEMARK OFFICE

UNITED STATES DEPARTMENT OF COMMERCE
United States Patent and Trademark Office
Address: COMMISSIONER FOR PATENTS
P.O. Box 1450
Alexandria, Virginia 22313-1450
www.uspto.gov

APPLICATION NO.	FILING DATE	FIRST NAMED INVENTOR	ATTORNEY DOCKET NO.	CONFIRMATION NO.
12/467,431	05/18/2009	Raymond E. Davis	23365-0032001	8027

26231 7590 03/28/2011
FISH & RICHARDSON P.C. (DA)
P.O. BOX 1022
MINNEAPOLIS, MN 55440-1022

EXAMINER
HONG, JOHN C

ART UNIT	PAPER NUMBER
3726	

NOTIFICATION DATE	DELIVERY MODE
03/28/2011	ELECTRONIC

Please find below and/or attached an Office communication concerning this application or proceeding.

The time period for reply, if any, is set in the attached communication.

Notice of the Office communication was sent electronically on above-indicated "Notification Date" to the following e-mail address(es):

PATDOCTC@fr.com

UNITED STATES PATENT AND TRADEMARK OFFICE

Commissioner for Patents
United States Patent and Trademark Office
P.O. Box 1450
Alexandria, VA 22313-1450
www.uspto.gov

FISH & RICHARDSON P.C. (DA)
P.O. BOX 1022
MINNEAPOLIS MN 55440-1022

In re Application of	:
DAVIS, RAYMOND E. et al	: DECISION ON REQUEST TO
Application No. 12/467,431	: PARTICIPATE IN PATENT
Filed: May 18, 2009	: PROSECUTION HIGHWAY
Attorney Docket No. 23365/0032001	: PILOT PROGRAM AND PETITION
For: TAG TOOL PROTECTIVE DEVICE,	: TO MAKE SPECIAL UNDER
SYSTEM, AND METHOD	: 37 CFR 1.102(a)

This is a decision on the request to participate in the Patent Prosecution Highway (PPH) program and the petition under 37 CFR 1.102(a), filed March 24, 2010 to make the above-identified application special.

The request and petition are granted.

A grantable request to participate in the PPH program and petition to make special require:
(1) The U.S. application must disclose an eligible relationship to one or more PCT applications filed in the JPO, EPO, KIPO or USPTO;
(2) Applicant must submit a copy of the allowable/patentable claim(s) from the PCT application(s) latest international work product (the written opinion or the IPER) along with an English translation thereof and a statement that the English translation is accurate;
(3) All the claims in the U.S. application must sufficiently correspond or be amended to sufficiently correspond to the allowable/patentable claim(s) in the PCT application(s);
(4) Examination of the U.S. application has not begun;
(5) Applicant must submit a copy of the latest international work product from the PCT application containing the allowable/patentable claim(s) along with an English translation thereof and a statement that the English translation is accurate; and
(6) Applicant must submit an IDS listing the documents cited by the PCT examiner in the international work product along with copies of documents except U.S. patents or U.S. patent application publications.

In light of the petition being properly submitted, the request to participate in the PPH program and the petition comply with the above requirements. Accordingly, the above-identified application has been accorded "special" status.

The applicant is encouraged to cite and submit all relevant prior art references, if any, to facilitate examination in this application.

All other inquiries concerning the examination or status of the application should be directed to David Bryant, the SPE of Art Unit 3726 and (571)272-4526 for Class 29/525 and also accessible in the PAIR system at http://www.uspto.gov/ebc.index.html.

All other inquiries concerning the examination or status of the application should be directed to the Patent Application Information Retrieval (PAIR) system.

This application will be forwarded and docketed to an examiner for action on the merits commensurate with this decision.

Telephone inquiries concerning this decision should be directed to Henry C. Yuen, at 571-272-4856.

The petition is **granted.**

/Henry C. Yuen/

Henry C. Yuen, Special Programs Examiner
Technology Center 3700 – Mechanical Engineering,
Manufacturing and Products
571-272-4856

UNITED STATES PATENT AND TRADEMARK OFFICE

Commissioner for Patents
United States Patent and Trademark Office
P.O. Box 1450
Alexandria, VA 22313-1450
www.uspto.gov

April 26, 2011

Robinson Intellectual Property Law Office, P.C.
3975 Fair Ridge Drive
Suite 20 North
Fairfax VA 22033

In re Application of	:	
Kato, Sho et al	:	**DECISION ON PETITION**
Application No. 12/467,454	:	
Filed: 05/18/2009	:	***ACCEPTANCE OF COLOR***
Attorney Docket No. 0756-8546	:	***DRAWINGS***

This is a decision on the Petition to Accept Color Drawings under 37 C.F.R 1.84 (a) (2), received in the United States Patent and Trademark Office (USPTO) May, 18, 2009.

The petition is **GRANTED**.

A grantable petition under 37 C.F.R. 1.84(a) (2) must be accompanied by the following.

1. The fee set forth under 37 C.F.R. 1.17(h),
2. Three (3) sets of the color drawings in question, or (1) set if filed via EFS, and
3. The specification contains appropriate language referring to the color drawings as the first paragraph in that portion of the specification relating to the brief description of the drawings.

The petition was accompanied by all of the required fees and drawings. The specification contains the appropriate language. Therefore, the petition is GRANTED.

Telephone inquires relating to this decision may be directed to the undersigned in the Office of Data Management at 571-272-4200.

/Diane Terry/
Quality Control Specialist
Office of Data Management
Publications Branch

UNITED STATES PATENT AND TRADEMARK OFFICE

UNITED STATES DEPARTMENT OF COMMERCE
United States Patent and Trademark Office
Address: COMMISSIONER FOR PATENTS
P.O. Box 1450
Alexandria, Virginia 22313-1450
www.uspto.gov

APPLICATION NO.	FILING DATE	FIRST NAMED INVENTOR	ATTORNEY DOCKET NO.	CONFIRMATION NO.
12/467,454	05/18/2009	Sho KATO	0756-8546	8074

7590 04/26/2011
Robinson Intellectual Property Law Office, P.C.
3975 Fair Ridge Drive
Suite 20 North
Fairfax, VA 22033

EXAMINER
LEE, HSIEN MING

ART UNIT	PAPER NUMBER
2823	

MAIL DATE	DELIVERY MODE
04/26/2011	PAPER

ACKNOWLEDGEMENT OF REQUEST

Notice of Allowance/Allowability Mailed

The request to print a color drawing reference as the first paragraph in the portion of the specification containing a brief description of the drawings as required by 37 CFR 1.84 and MPEP § 608.02 has been received by the United States Patent and Trademark Office and will be entered into the specification.

571-272-4200 or 1-888-786-0101
Application Assistance Unit
Office of Data Management

FORM PTOM327-5 (Rev. 02/08)

UNITED STATES PATENT AND TRADEMARK OFFICE

Commissioner for Patents
United States Patent and Trademark Office
P.O. Box 1450
Alexandria, VA 22313-1450
www.uspto.gov

NAVAL MEDICAL RESEARCH CENTER
ATTN: (CODE 00L)
503 ROBERT GRANT AVENUE
SILVER SPRING MD 20910-7500

AUG 24 2011

In re Application of		
CHING, WEI-MEI et al.	:	
Application No.: 12/467,533	:	DECISION ON
Filing or 371(c) Date: May 18, 2009	:	PETITION
Attorney Docket Number: 99392	:	

This is a decision on the Petition to Withdraw Holding of Abandonment received in the United States Patent and Trademark Office (USPTO) on August 15, 2011.

This petition is **GRANTED**.

The application was inadvertently abandoned for failure to timely submit the Issue Fee and Publication fee as required by the Notice of Allowance mailed April 18, 2011 which set forth a three (3) month statutory period of reply. The Notice of Abandonment was mailed on August 1, 2011.

Petitioner states that the issue fee transmittal and payment were timely authorized in the response on February 9, 2011. Petitioner submitted a copy of the original submission which included a properly completed Certificate of Mailing/Transmission. The general authorization of the issue fee of $1510.00 and $300 for publication fee was charged to Deposit Account.

In view of the foregoing, the holding of abandonment for failure to timely pay the issue fee is hereby withdrawn and the application restored to pending status.

Telephone inquiries concerning this matter should be directed to the undersigned at (703) 756-1547.

Kay D. Pinkney
Application Assistance Unit
Office of Data Management

UNITED STATES PATENT AND TRADEMARK OFFICE

Commissioner for Patents
United States Patent and Trademark Office
P.O. Box 1450
Alexandria, VA 22313-1450
www.uspto.gov

SCHLUMBERGER INFORMATION SOLUTIONS
10001 Richmond Avenue
IP Administration Center of Excellence
HOUSTON TX 77042

MAILED
DEC 06 2011
OFFICE OF PETITIONS

In re Application of	:	
BIRCHWOOD, SINGH and MESE	:	DECISION REFUSING STATUS
Application No. 12/467,545	:	UNDER 37 CFR 1.47(a)
Filed: May 18, 2009	:	
Attorney Docket No. 110.0127 CIP	:	
Title: ESTIMATING IN SITU	:	
MECHANICAL PROPERTIES OF	:	
SEDIMENTS CONTAINING GAS	:	
HYDRATES	:	

This is in response to the petition under 37 CFR 1.47(a), filed October 2, 2009. Applicants obtained an extension of time for response within the third month. The petition is filed timely.

The petition is **dismissed**.

Applicants are given TWO (2) MONTHS from the mailing date of this decision to reply, correcting the below-noted deficiencies. Any reply should be entitled "Request for Reconsideration of Petition Under 37 CFR 1.47(a)," and should address the deficiencies noted below, except that the reply may include an oath or declaration executed by the non-signing inventor. Failure to respond will result in abandonment of the application. Any extensions of time will be governed by 37 CFR 1.136(a).

A grantable petition under 37 CFR 1.47(a) requires: (1) proof that the non-signing inventor cannot be reached or refuses to sign the oath or declaration after having been presented with the application papers (specification, claims and drawings); (2) an acceptable oath or declaration in compliance with 35 U.S.C. §§ 115 and 116; (3) the petition fee; and (4) a statement of the last known address of the non-signing inventor. Applicants lack item (1).

As to item (1), applicants have not provided sufficient proof that the non-signing inventor was sent or presented with a complete copy of the application (specification, including the claims, drawings, if any, and the declaration) as filed in the USPTO on May 18, 2009. See MPEP 409.03(d). Applicants stated that they sent a draft of the above-identified application via email to the non-signing inventor.

Pursuant to MPEP 409.03(d)(II),

> A refusal by an inventor to sign an oath or declaration when the inventor has not been presented with the application papers does not itself suggest that the inventor is refusing to join the application unless it is clear that the inventor understands exactly what he or she is being asked to sign and refuses to accept the application papers. A copy of the application papers should be sent to the last known address of the nonsigning inventor, or, if the nonsigning inventor is represented by counsel, to the address of the nonsigning inventor's attorney. The fact that an application may contain proprietary information does not relieve the 37 CFR 1.47 applicant of the responsibility to present the application papers to the inventor if the inventor is willing to receive the papers in order to sign the oath or declaration. It is noted that the inventor may obtain a complete copy of the application, unless the inventor has assigned his or her interest in the application, and the assignee has requested that the inventor not be permitted access. See MPEP § 106. It is reasonable to require that the inventor be presented with the application papers before a petition under 37 CFR 1.47 is granted since such a procedure ensures that the inventor is apprised of the application to which the oath or declaration is directed. In re Gray, 115 USPQ 80 (Comm'r Pat. 1956).

In any renewed petition, applicants must demonstrate that they presented the complete copy of the application papers as filed in the USPTO on May 18, 2009, to the non-signing inventor for his review. As applicants are aware of the non-signing inventor's address, it is suggested that they mail a complete copy of the application papers, return receipt requested, to that address. Applicants may show that a copy of the application as filed was mailed or presented to the non-signing inventor for review by providing a copy of the cover letter sent with the application papers to the non-signing inventor or details given in an affidavit or declaration of facts by a person having first-hand knowledge of the events. If the non-signing inventor refuses to execute the declaration in writing, applicants must submit a copy of that written refusal with any renewed petition. Likewise, if the non-signing inventor makes an oral refusal to a person, then that individual must provide details of the refusal in an affidavit or declaration of fact. If the non-signing inventor refuses to accept delivery of the papers or the inventor's conduct constitutes a refusal to join in the application, applicants will have provided proof of refusal to sign the declaration.

In view of the above, the petition under 37 CFR 1.47(a) is dismissed.

Further correspondence with respect to this matter should be addressed as follows:

By mail: Mail Stop Petition
Commissioner for Patents
P.O. Box 1450
Alexandria, VA 22313-1450

By FAX: (571) 272-8300
Attn: Office of Petitions

By hand: Customer Service Window
Randolph Building
401 Dulany Street
Alexandria, VA 22314

Registered users of EFS-Web may alternatively submit correspondence via EFS-Web.

Telephone inquiries related to this decision may be directed to the undersigned at (571) 272-3211.

C. T. Donnell

Christina Tartera Donnell
Senior Petitions Attorney
Office of Petitions

UNITED STATES PATENT AND TRADEMARK OFFICE

Commissioner for Patents
United States Patent and Trademark Office
P.O. Box 1450
Alexandria, VA 22313-1450
www.uspto.gov

SCHLUMBERGER INFORMATION SOLUTIONS
10001 RICHMOND AVENUE
IP ADMINISTRATION CENTER OF EXCELLENCE
HOUSTON TX 77042

MAILED
FEB 14 2012
OFFICE OF PETITIONS

In re Application of Birchwood et al. Application No. 12/467,545 Filed: 05/18/2009 Attorney Docket No. 110.0127 CIP	: : : : :	DECISION NOTING JOINDER OF INVENTOR AND PETITION UNDER 37 CFR 1.47(a) AS MOOT

This is in response to the renewed petition under 37 CFR 1.47(a) filed February 3, 2012.

In response to the decision dismissing the original petition under 37 CFR 1.47(a), applicants submitted a declaration signed by all of the named inventors in the application. In view of the joinder of the inventors, further consideration under 37 CFR 1.47(a) is not necessary.

Accordingly, the petition is dismissed as involving a moot issue. This application does not have any Rule 1.47(a) status and no such status should appear on the file wrapper. This application does not need to be returned to the Office of Petitions for further consideration under 37 CFR 1.47(a).

This application is being referred to Technology Center Art Unit 2857.

Telephone inquiries related to this decision should be directed to the undersigned at (571) 272-3211.

/Christina Tartera Donnell/

Christina Tartera Donnell
Senior Petitions Attorney
Office of Petitions

UNITED STATES PATENT AND TRADEMARK OFFICE

UNITED STATES DEPARTMENT OF COMMERCE
United States Patent and Trademark Office
Address: COMMISSIONER FOR PATENTS
P.O. Box 1450
Alexandria, Virginia 22313-1450
www.uspto.gov

APPLICATION NO.	FILING DATE	FIRST NAMED INVENTOR	ATTORNEY DOCKET NO.	CONFIRMATION NO.
12/467,572	05/18/2009	Kazue TANAKA	24095	8306

23389 7590 11/04/2011
SCULLY SCOTT MURPHY & PRESSER, PC
400 GARDEN CITY PLAZA
SUITE 300
GARDEN CITY, NY 11530

EXAMINER
NGUYEN, HIEN NGOC

ART UNIT	PAPER NUMBER
3777	

MAIL DATE	DELIVERY MODE
11/04/2011	PAPER

Please find below and/or attached an Office communication concerning this application or proceeding.

The time period for reply, if any, is set in the attached communication.

UNITED STATES PATENT AND TRADEMARK OFFICE

Commissioner for Patents
United States Patent and Trademark Office
P.O. Box 1450
Alexandria, VA 22313-1450
www.uspto.gov

SCULLY SCOTT MURPHY & PRESSER, PC
400 GARDEN CITY PLAZA
SUITE 300
GARDEN CITY NY 11530

In re Application of:
TANAKA, KAZUE et al
Serial No.: 12/467,572
Filed: May 18, 2009
Docket: 24095
Title:

ULTRASOUND OPERATION APPARATUS, CAVITATION CONTROL METHOD, AND ULTRASOUND TRANSDUCER CONTROL METHOD

:: DECISION ON REQUEST TO PARTICIPATE IN PATENT PROSECUTION HIGHWAY (PPH) AND PETITION TO MAKE SPECIAL UNDER 37 CFR 1.102(d)

This is a decision on the request to participate in the Patent Prosecution Highway (PPH) program and the petition under 37 CFR 1.102(d), filed Oct. 16, 2011, to make the above-identified application special.

The request and petition are **DENIED**.

A grantable request to participate in the PPH program and petition to make special require:

(1) The U.S. application must validly claim priority under 35 U.S.C. 119(a) to one or more corresponding application(s) filed in the JPO or to a PCT application that does not contain any priority claim, or the U.S. application must be a national stage entry of a PCT application that does not contain any priority claim;
(2) Applicant must submit a copy of the allowable/patentable claim(s) from the JPO application(s) along with an English translation thereof and a statement that the English translation is accurate;
(3) All the claims in the U.S. application must sufficiently correspond or be amended to sufficiently correspond to the allowable/patentable claim(s) in the JPO application(s);
(4) Examination of the U.S. application has not begun;
(5) Applicant must submit a copy of all the office actions from each of the JPO application(s) containing the allowable/patentable claim(s) along with an English translation thereof and a statement that the English translation is accurate; and

(6) Applicant must submit an IDS listing the documents cited by the JPO examiner in the JPO office action along with copies of documents except U.S. patents or U.S. patent application publications.

The request to participate in the PPH pilot program and petition met all conditions except Item #4 above. However, the examiner issued an Office action on the merits and allowed the case on Oct. 31, 2011. Therefore, the petition cannot be granted.

Applicant is encouraged to cite and submit all relevant prior art references, if any, to facilitate examination in this application.

Any inquiry regarding this decision should be directed to Henry Yuen, Special Program Examiner, at (571) 272-4856. All other inquiries concerning the examination or status of the application should be directed to Examiner Hai Huynh at 571-272-4844.

The petition is denied.

/Henry C. Yuen/

Henry C. Yuen
Special Programs Examiner
Technology Center 3700
Tel: 571-272-4856

UNITED STATES PATENT AND TRADEMARK OFFICE

UNITED STATES DEPARTMENT OF COMMERCE
United States Patent and Trademark Office
Address: COMMISSIONER FOR PATENTS
P.O. Box 1450
Alexandria, Virginia 22313-1450
www.uspto.gov

APPLICATION NO.	FILING DATE	FIRST NAMED INVENTOR	ATTORNEY DOCKET NO.	CONFIRMATION NO.
12/467,609	05/18/2009	Zahid Hussain	FORT-001820	8369

73230 7590 01/09/2012
DLA PIPER US LLP
2000 Avenue of the Stars
SUITE 400 North Tower
LOS ANGELES, CA 90067-4704

EXAMINER
PHAN, MAN U

ART UNIT	PAPER NUMBER
2475	

NOTIFICATION DATE	DELIVERY MODE
01/09/2012	ELECTRONIC

Please find below and/or attached an Office communication concerning this application or proceeding.

The time period for reply, if any, is set in the attached communication.

Notice of the Office communication was sent electronically on above-indicated "Notification Date" to the following e-mail address(es):

laura.rivero@dlapiper.com
laccusptomail@dlapiper.com
cliff.keyner@dlapiper.com

UNITED STATES PATENT AND TRADEMARK OFFICE

Commissioner for Patents
United States Patent and Trademark Office
P.O. Box 1450
Alexandria, VA 22313-1450
www.uspto.gov

DLA PIPER US LLP
2000 Avenue of the Stars
SUITE 400 North Tower
LOS ANGELES CA 90067-4704

MAILED

JAN 09 2012

DIRECTOR OFFICE
TECHNOLOGY CENTER 2400

In re Application of:
Zahid Hussein et al.
Application No. 12/467609
Filed: May 18, 2009
For: Hierarchical Metering in a Virtual Router-Based Network Switch

DECISION ON PETITION UNDER 37 C.F.R. § 1.181

This is a decision on the petition filed November 21, 2011 to expunge material from assignment records as described in MPEP 323.01(d).

The petition is **DENIED**.

On November 18, 2011, Applicant's counsel filed an associate power of attorney granting James R. Thein power to prosecute applications referenced in the provided Exhibit A. The instant application is one of the applications listed in Exhibit A. Per MPEP 402.02, "(t)he Office no longer accepts a power of attorney signed by a principal to name an associate power of attorney. An appointment of an associate power of attorney filed on or after June 25, 2004 will not be accepted." As the associate power of attorney is not accepted, James R. Thein is not recognized as an attorney of record in the instant application. Further, as James R. Thein has signed the petition filed November 21, 2011, the petition is not signed by an attorney of record.

Per MPEP 323.01(d), a petition to expunge assignment records are granted only if the petitioner can prove that: "(A) the normal corrective procedures outlined in MPEP § 323.01(a) through § 323.01(c) will not provide the petitioner with adequate relief; and (B) the integrity of the assignment records will not be affected by granting the petition."

The petition filed November 21, 2011 requests expungement of "the documents disclosed in reel 026828 frames 438-446 and frame 450 as their publication poses irreparable harm to the petitioner." The petition further states that the above documents are "confidential pending patent applications and publishing those pending patent application serial numbers would be detrimental to the owner of the property rights." However, as the assignment records were not submitted and identified as trade secret, proprietary, and/or protective order material in the manner described in MPEP 724.02, the pending patent applications cited therein cannot be considered to be "confidential." Further, the assignment records submitted as part of the petition include United States Patent numbers and United States Patent Application Publication numbers corresponding to each of the listed patent application numbers. Therefore, the patent application

numbers are in the public domain due to being published in either a United States Patent or a United States Patent Application Publication.

The petitioner has neither provided information so as to prove that the normal corrective procedures in MPEP § 323.01(a) through § 323.01(c) will not provide adequate relief nor shown that the integrity of the assignment records will not be affected by granting the petition. Further, the assignment records are not considered to be trade secret, proprietary, or protective order material as outlined in MPEP 724.02. Lastly, the patent application numbers listed in the Exhibit A of the petition are in the public domain due to being published in either a United States Patent or a United States Patent Application Publication.

Accordingly, the petition is **DENIED.**

Any inquiry concerning this decision should be directed to the undersigned whose telephone number is (571) 272-3126.

Chau T. Nguyen

Chau T. Nguyen
Workgroup Quality Assurance Specialist
Technology Center 2400

UNITED STATES PATENT AND TRADEMARK OFFICE

Commissioner for Patents
United States Patent and Trademark Office
P.O. Box 1450
Alexandria, VA 22313-1450
www.uspto.gov

MICHAEL W. TAYLOR
P.O. BOX 3791
ORLANDO FL 32802-3791

MAILED
APR 03 2012
OFFICE OF PETITIONS

In re Application of	:	
Sweat	:	
Application No. 12/467,629	:	DECISION ON PETITION
Filed: 18 May, 2009	:	
Attorney Docket No. 0110469	:	

This is a decision on the petition filed on 17 February, 2012, pursuant to 37 C.F.R §1.182 requesting authorization to withdraw the terminal disclaimer filed 12 December, 2011.

NOTE:

Petitioner seeks to reopen the question of the propriety of the double patenting rejection that prompted the filing of terminal disclaimers—historically, such requests have not been favorably considered. (*See*: MPEP §1490.)

Petitioner now must present an Interview Summary provided by the Examiner evidencing that Petitioner has the concurrence of the Examiner to the withdrawal of the terminal disclaimer in question.

As of this writing, there has been no response of concurrence from the Patent Legal Research Center in this matter. Thus, after the requirement to evidence the Examiner's concurrence has been satisfied, Petitioner also must ensure that the subsequent concurrence of the Patent Legal Research Center can be obtained.

The petition pursuant to 37 C.F.R §1.182 is **DISMISSED**.

The guidance in the Commentary at MPEP §1490 provides in pertinent part:

***

VII. WITHDRAWING A RECORDED TERMINAL DISCLAIMER

If timely requested, a recorded terminal disclaimer may be withdrawn before the application in which it is filed issues as a patent, or in a reexamination proceeding, before

the reexamination certificate issues. After a patent or reexamination certificate issues, it is unlikely that a recorded terminal disclaimer will be nullified.

A. Before Issuance Of Patent

While the filing and recordation of an unnecessary terminal disclaimer has been characterized as an "unhappy circumstance" in *In re Jentoft*, 392 F.2d 633, 157 USPQ 363 (CCPA 1968), there is no statutory prohibition against nullifying or otherwise canceling the effect of a recorded terminal disclaimer which was erroneously filed before the patent issues. *>Because< the terminal disclaimer would not take effect until the patent is granted, and the public has not had the opportunity to rely on the terminal disclaimer, relief from this unhappy circumstance may be available by way of petition or by refiling the application (other than by refiling it as a CPA).

Under appropriate circumstances, consistent with the orderly administration of the examination process, the nullification of a recorded terminal disclaimer may be addressed by filing a petition under 37 CFR §1.182 requesting withdrawal of the recorded terminal disclaimer. Petitions seeking to reopen the question of the propriety of the double patenting rejection that prompted the filing of the terminal disclaimer have not been favorably considered. The filing of a continuing application other than a CPA, while abandoning the application in which the terminal disclaimer has been filed, will typically nullify the effect of a terminal disclaimer. The filing of a Request for Continued Examination (RCE) of an application under 37 CFR §1.114 will not nullify the effect of a terminal disclaimer, *>because< a new application has not been filed, but rather prosecution has been continued in the existing application. (Emphasis supplied.)

***

It appears that Petitioner well may have determined for purposes of prosecution strategy to submit the terminal disclaimer (even if in the presence of Petitioner's own belief that the disclaimer was unnecessary).

Thus, Petitioner appears to have made choices deemed to provide to him a prosecution road to allowance, and the Office will not indiscriminately alter those choices.

Accordingly, the petition is **dismissed**.

This application is released to the Technology Center/AU 2127 for such processing as is necessary in due course.

While telephone inquiries regarding this decision may be directed to the undersigned at (571) 272-3214, it is noted that all practice before the Office is in writing (see: 37 C.F.R. §1.2[1]) and the proper authority for action on any matter in this regard are the statutes (35 U.S.C.), regulations (37 C.F.R.) and the commentary on policy (MPEP). Therefore, no telephone discussion may be controlling or considered authority for Petitioner's/Caller's action(s).

/ John J. Gillon, Jr./
John J. Gillon, Jr.
Senior Attorney
Office of Petitions

[1] The regulations at 37 C.F.R. §1.2 provide:
§1.2 Business to be transacted in writing.
All business with the Patent and Trademark Office should be transacted in writing.The personal attendance of applicants or their attorneys or agents at the Patent and Trademark Office is unnecessary. The action of the Patent and Trademark Office will be based exclusively on the written record in the Office. No attention will be paid to any alleged oral promise, stipulation,or understanding in relation to which there is disagreement or doubt.

UNITED STATES PATENT AND TRADEMARK OFFICE

Commissioner for Patents
United States Patent and Trademark Office
P.O. Box 1450
Alexandria, VA 22313-1450
www.uspto.gov

MAILED
OCT 19 2011
OFFICE OF PETITIONS

VOLPE AND KOENIG, P.C.
DEPT. ICC
UNITED PLAZA
30 SOUTH 17TH STREET
PHILADELPHIA PA 19103

In re Patent No. 7,970,127	:	
Issue Date: June 28, 2011	:	
Application No. 12/467,694	:	DECISION ON REQUEST FOR REFUND
Filed: May 18, 2009	:	
Attorney Docket No. I-2-0332US05	:	

This is a decision on the Request For Refund filed October 14, 2011.

The request is **DISMISSED**.

The request for refund is dismissed because USPTO regulations require that papers filed in the application be signed by a registered attorney or agent, by the applicants (inventors) or by the assignee of the entire interest who has taken action in the application in accordance with 37 CFR 3.71. The request for refund is signed Beth Patterson. Note 37 CFR 1.33(b) which states:

> (b) Amendments and other papers. Amendments and other papers, except for written assertions pursuant to § 1.27(c)(2)(ii) of this part, filed in the application must be signed by:
> (1) A registered patent attorney or patent agent of record appointed in compliance with § 1.32(b);
> (2) A registered patent attorney or patent agent not of record who acts in a representative capacity under the provisions of § 1.34;
> (3) An assignee as provided for under §3.71(b) of this chapter; or
> (4) All of the applicants (§ 1.41(b)) for patent, unless there is an assignee of the entire interest and such assignee has taken action in the application in accordance with § 3.71 of this chapter.

Any questions concerning this matter may be directed to the undersigned at (571) 272-3208.

/KOC/
Karen Creasy
Petitions Examiner
Office of Petitions

Cc:

ALSTON & BIRD LLP
BANK OF AMERICA PLAZA
101 SOUTH TRYON STREET, SUITE 4000
CHARLOTTE, NC 28280-4000

UNITED STATES PATENT AND TRADEMARK OFFICE

Commissioner for Patents
United States Patent and Trademark Office
P.O. Box 1450
Alexandria, VA 22313-1450
www.uspto.gov

VOLPE AND KOENIG, P.C.
DEPT. ICC
UNITED PLAZA
30 SOUTH 17TH STREET
PHILADELPHIA PA 19103

MAILED
DEC 09 2011
OFFICE OF PETITIONS

In re Patent No. 7,970,127	:	
Issue Date : June 28, 2011	:	
Application No. 12/467,694	:	RESPONSE TO PETITION
Filed: May 18, 2009	:	
Attorney Docket No. II-2-0332US05	:	

This is a response to the petitions, filed September 23, 2011, which are being treated as petitions under 37 CFR 1.59(b) and 1.182 to expunge a document titled Rebuttal Expert Report of Dr. Apostolos K. Kakaes Regarding Non-Infringement of U.S. Patent No. 6,973,579 (Rebuttal Report) submitted in an IDS filed May 27, 2009. The Rebuttal Report is alleged to be under the protective order of the U.S. International Trade Commission (ITC).

The petition under 37 CFR 1.59(b) is **dismissed**. The petition is deficient because the petition was filed after issuance of the above identified application. Petitions to expunge filed under 37 CFR 1.59 cannot be granted in a patented file.

The petition under 37 CFR 1.182 is **dismissed** as being moot.

Petitioner requests expungement of the Rebuttal Report which was allegedly included with an IDS filed May 27, 2009. A review of the file shows that the Rebuttal Report was listed under the "Other Documents" heading on page 10 (not page 9 as indicated in the petition). However, the Information Disclosure Statement transmittal letter filed with the IDS clearly states that copies of documents cited in the parent application are not enclosed. Newly cited documents are identified with an asterisk and copies of those documents are included with the IDS. There is no asterisk identifying the Rebuttal Report as a newly cited document and therefore no copy of this document is provided with the IDS. Since a copy of this document is not in the file of the above identified application, there is no paper to expunge and the petition is moot.

Telephone inquiries relative to this decision should be directed to Carl Friedman at (571) 272-6842.

Carl Friedman
Petitions Examiner
Office of Petitions

cc: Alston & Bird LLP
Bank of America Plaza
101 South Tryon Street, Suite 4000
Charlotte, NC 28280-4000

UNITED STATES PATENT AND TRADEMARK OFFICE

Commissioner for Patents
United States Patent and Trademark Office
P.O. Box 1450

MAILED
MAR 16 2011
OFFICE OF PETITIONS

James Ray & Associates
2640 Pitcairn Road
Monroeville, Pennsylvania 15146

In re Application of	:	
Jose G. ORTIZ et al.	:	DECISION GRANTING PETITION
Application No. 12/467,696	:	UNDER 37 CFR 1.137(b)
Filed: May 18, 2009	:	
Atty. Docket No.: JGO 09056	:	

This is a decision on the petition under 37 CFR 1.137(b), filed January 3, 2011, to revive the above-identified application ("Application").

The petition is **DISMISSED**.

Any request for reconsideration of this decision must be submitted within TWO (2) MONTHS from the mailing date of this decision. Extensions of time under 37 CFR 1.136(a) are permitted. The reconsideration request should include a cover letter entitled "Renewed Petition under 37 CFR 1.137(b)". This is **not** a final agency action within the meaning of 5 U.S.C. § 704.

The application became abandoned for failure to timely file a reply within the meaning of 37 CFR 1.113 to the final Office action of February 25, 2010, which set a shortened statutory period for reply of three (3) months. No extension of time under the provisions of 37 CFR 1.136(a) was obtained. The application thus became abandoned on May 26, 2010, with notification mailed September 22, 2010.

The proposed reply required for consideration of a petition to revive must be a Notice of Appeal (and appeal fee required by 37 CFR 41.20(b)(2)), an amendment that *prima facie* places the application in condition for allowance, a Request for Continued Examination (RCE), an submission (37 CFR 1.114), or the filing of a continuing application under 37 CFR 1.53(b). *See* MPEP 711.03(c)(III)(A)(2). Since the amendment submitted does not *prima facie* place the application in condition for allowance, the reply required must be a Notice of Appeal (and appeal fee), RCE, or the filing of a continuing application under 37 CFR 1.53(b).

A grantable petition under 37 CFR 1.137(b) must be accompanied by: (1) the appropriate reply, unless previously filed; (2) the petition fee as set forth in 37 CFR 1.17(m); (3) a

Statement that the entire delay in filing the required reply from the due date for the reply until the filing of a grantable petition pursuant to 37 CFR 1.137(b) was unintentional; and (4) any terminal disclaimer (and fee as set forth in 37 CFR 1.20(d)) required by 37 CFR 1.137(d). The present petition lacks item (1). The Amendment submitted with the petition has been deemed unable to place the claims in condition for allowance. See enclosed PTOL-303.

Further correspondence with respect to this matter should be addressed as follows:

By Mail: Mail Stop PETITION
Commissioner for Patents
P. O. Box 1450
Alexandria, VA 22313-1450

By hand: U. S. Patent and Trademark Office
Customer Service Window, Mail Stop Petitions
Randolph Building
401 Dulany Street
Alexandria, VA 22314

The centralized facsimile number is **(571) 273-8300.**

General inquiries relating to this decision should be directed to Robert DeWitty (571-272-6051).

Ramesh Krishnamurthy

for David Bucci
Petitions Examiner
Office of Petitions

encl. Advisory Action Before the Filing of an Appeal Brief; PTOL-303

Advisory Action Before the Filing of an Appeal Brief	Application No. 12/467,696	Applicant(s) ORTIZ ET AL.	
	Examiner DANIELLE JACKSON	Art Unit 3636	

--The MAILING DATE of this communication appears on the cover sheet with the correspondence address --

THE REPLY FILED 03 January 2011 FAILS TO PLACE THIS APPLICATION IN CONDITION FOR ALLOWANCE.

1. ☒ The reply was filed after a final rejection, but prior to or on the same day as filing a Notice of Appeal. To avoid abandonment of this application, applicant must timely file one of the following replies: (1) an amendment, affidavit, or other evidence, which places the application in condition for allowance; (2) a Notice of Appeal (with appeal fee) in compliance with 37 CFR 41.31; or (3) a Request for Continued Examination (RCE) in compliance with 37 CFR 1.114. The reply must be filed within one of the following time periods:
   a) ☒ The period for reply expires 3 months from the mailing date of the final rejection.
   b) ☐ The period for reply expires on: (1) the mailing date of this Advisory Action, or (2) the date set forth in the final rejection, whichever is later. In no event, however, will the statutory period for reply expire later than SIX MONTHS from the mailing date of the final rejection.
   Examiner Note: If box 1 is checked, check either box (a) or (b). ONLY CHECK BOX (b) WHEN THE FIRST REPLY WAS FILED WITHIN TWO MONTHS OF THE FINAL REJECTION. See MPEP 706.07(f).

Extensions of time may be obtained under 37 CFR 1.136(a). The date on which the petition under 37 CFR 1.136(a) and the appropriate extension fee have been filed is the date for purposes of determining the period of extension and the corresponding amount of the fee. The appropriate extension fee under 37 CFR 1.17(a) is calculated from: (1) the expiration date of the shortened statutory period for reply originally set in the final Office action; or (2) as set forth in (b) above, if checked. Any reply received by the Office later than three months after the mailing date of the final rejection, even if timely filed, may reduce any earned patent term adjustment. See 37 CFR 1.704(b).

NOTICE OF APPEAL

2. ☐ The Notice of Appeal was filed on _____. A brief in compliance with 37 CFR 41.37 must be filed within two months of the date of filing the Notice of Appeal (37 CFR 41.37(a)), or any extension thereof (37 CFR 41.37(e)), to avoid dismissal of the appeal. Since a Notice of Appeal has been filed, any reply must be filed within the time period set forth in 37 CFR 41.37(a).

AMENDMENTS

3. ☒ The proposed amendment(s) filed after a final rejection, but prior to the date of filing a brief, will not be entered because
   (a) ☒ They raise new issues that would require further consideration and/or search (see NOTE below);
   (b) ☐ They raise the issue of new matter (see NOTE below);
   (c) ☐ They are not deemed to place the application in better form for appeal by materially reducing or simplifying the issues for appeal; and/or
   (d) ☐ They present additional claims without canceling a corresponding number of finally rejected claims.
   NOTE: *See Continuation Sheet*. (See 37 CFR 1.116 and 41.33(a)).
4. ☐ The amendments are not in compliance with 37 CFR 1.121. See attached Notice of Non-Compliant Amendment (PTOL-324).
5. ☐ Applicant's reply has overcome the following rejection(s): _____.
6. ☐ Newly proposed or amended claim(s) _____ would be allowable if submitted in a separate, timely filed amendment canceling the non-allowable claim(s).
7. ☒ For purposes of appeal, the proposed amendment(s): a) ☒ will not be entered, or b) ☐ will be entered and an explanation of how the new or amended claims would be rejected is provided below or appended.
   The status of the claim(s) is (or will be) as follows:
   Claim(s) allowed: _____.
   Claim(s) objected to: _____.
   Claim(s) rejected: *1-10*.
   Claim(s) withdrawn from consideration: _____.

AFFIDAVIT OR OTHER EVIDENCE

8. ☐ The affidavit or other evidence filed after a final action, but before or on the date of filing a Notice of Appeal will not be entered because applicant failed to provide a showing of good and sufficient reasons why the affidavit or other evidence is necessary and was not earlier presented. See 37 CFR 1.116(e).
9. ☐ The affidavit or other evidence filed after the date of filing a Notice of Appeal, but prior to the date of filing a brief, will not be entered because the affidavit or other evidence failed to overcome all rejections under appeal and/or appellant fails to provide a showing a good and sufficient reasons why it is necessary and was not earlier presented. See 37 CFR 41.33(d)(1).
10. ☐ The affidavit or other evidence is entered. An explanation of the status of the claims after entry is below or attached.

REQUEST FOR RECONSIDERATION/OTHER

11. ☒ The request for reconsideration has been considered but does NOT place the application in condition for allowance because: Applicant's arguments are based on the new limtaiton ("a pair of substantially straight one piece elongated members") and therefore are moot without further consideration.
12. ☐ Note the attached Information *Disclosure Statement*(s). (PTO/SB/08) Paper No(s). _____
13. ☐ Other: _____.

Continuation of 3. NOTE: The amendmed claim includes a new limtation that would require further search/consideration.

UNITED STATES PATENT AND TRADEMARK OFFICE

Commissioner for Patents
United States Patent and Trademark Office
P.O. Box 1450

MAILED

JUN 08 2011

OFFICE OF PETITIONS

James Ray & Associates
2640 Pitcairn Road
Monroeville, Pennsylvania 15146

In re Application of	:	
Jose G. ORTIZ et al.	:	DECISION GRANTING PETITION
Application No. 12/467,696	:	UNDER 37 CFR 1.137(b)
Filed: May 18, 2009	:	
Atty. Docket No.: JGO 09056	:	

This is a decision on the petition under 37 CFR 1.137(b), filed May 16, 2011, which is being treated as a renewed petition under 37 CFR 1.137(b), to revive the above-identified application.

The petition is **GRANTED**.

The application became abandoned for failure to timely file a reply within the meaning of 37 CFR 1.113 to the final Office action of February 25, 2010, which set a shortened statutory period for reply of three (3) months. No extension of time under the provisions of 37 CFR 1.136(a) was obtained. The application thus became abandoned on May 26, 2010, with notification mailed September 22, 2010.

The petition satisfies the conditions for revival pursuant to 37 CFR 1.137(b) by including (1) a reply in the form of a Request for Continued Examination (RCE), RCE fee, and a submission required under 37 CFR 1.114, (2) a petition fee of $810, and (3) a statement of unintentional delay. The reply to the final Office action is accepted as having been unintentionally delayed.

Telephone inquires regarding this decision should be directed to Robert DeWitty, Petitions Attorney, Office of Petitions (571-272-8427).

The application file will be forwarded to Technology Center Art Unit 3636 for further action on the filed submission.

Ramesh Krishnamurthy

for David Bucci
Petitions Examiner
Office of Petitions

UNITED STATES PATENT AND TRADEMARK OFFICE

UNITED STATES DEPARTMENT OF COMMERCE
United States Patent and Trademark Office
Address: COMMISSIONER FOR PATENTS
P.O. Box 1450
Alexandria, Virginia 22313-1450
www.uspto.gov

APPLICATION NO.	FILING DATE	FIRST NAMED INVENTOR	ATTORNEY DOCKET NO.	CONFIRMATION NO.
12/467,791	05/18/2009	Tomohiro Kobayashi	1924.84732	8700

7590 09/01/2010
GREER, BURNS & CRAIN
300 S WACKER DR
25TH FLOOR
CHICAGO, IL 60606

EXAMINER
BEAUSOLIEL JR, ROBERT W

ART UNIT	PAPER NUMBER
2113	

MAIL DATE	DELIVERY MODE
09/01/2010	PAPER

DECISION GRANTING PETITION UNDER 37 CFR 1.138(d)

The declaration of express abandonment is recognized

This is in response to the petition under 37 CFR 1.138(d), requesting for a refund of any previously paid search fee and excess claims fee in the above-identified application.

The petition is granted.

The express abandonment is recognized. Any previously paid search fee and excess claims fee are hereby refunded.

Telephone inquiries should be directed to the Office of Data Management at (571) 272-4200.

Nioni Farmer

Patent Publication Branch
Office of Data Management

Adjustment date: 09/01/2010 NFARMER
05/19/2009 INTEFSW 00203295 072069 12467791
GE FC:1111 540.00 CR

FORM PET651G (Rev. 08/07)

UNITED STATES PATENT AND TRADEMARK OFFICE

Commissioner for Patents
United States Patent and Trademark Office
P.O. Box 1450
Alexandria, VA 22313-1450
www.uspto.gov

MAILED

MAR 09 2011

OFFICE OF PETITIONS

BALLARD SPAHR, LLP
SUITE 1000
999 PEACHTREE STREET
ATLANTA, GA 30309-3915

In re Application of
Stephen F. Brandon, et al.
Application No. 12/467,883
Filed: May 18, 2009
Attorney Docket No. 23290.0005U2

DECISION ON PETITION
TO MAKE SPECIAL UNDER
37 CFR 1.102(c)(1)

This is a decision on the petition under 37 CFR 1.102(c)(1), filed January 21, 2011, to make the above-identified application special based on applicant's age as set forth in M.P.E.P. § 708.02, Section IV.

The petition is **GRANTED**.

A grantable petition to make an application special under 37 CFR 1.102(c)(1) and MPEP § 708.02, Section IV: Applicant's Age must be accompanied by evidence showing that at least one of the applicants is 65 years of age, or more, such as a birth certificate or a statement by applicant. No fee is required

The instant petition includes a statement from applicant's representative that he is in possession of proof of applicant Stephen F. Brandon's age. Accordingly, the above-identified application has been accorded "special" status.

Telephone inquiries concerning this decision should be directed to undersigned at 571-272-1642.

All other inquiries concerning either the examination or status of the application should be directed to the Technology Center.

The application is being forwarded to the Technology Center Art Unit 1613 for action on the merits commensurate with this decision.

/AMW/
April M. Wise
Petitions Examiner
Office of Petitions

PTO/SB/20PCT-KR (06-10)
Approved for use through 01/31/2012. OMB 0651-0058
U.S. Patent and Trademark Office; U. S. DEPARTMENT OF COMMERCE
Under the Paperwork Reduction Act of 1995, no persons are required to respond to a collection of information unless it displays a valid OMB control number.

REQUEST FOR PARTICIPATION IN THE PATENT COOPERATION TREATY - PATENT PROSECUTION HIGHWAY (PCT-PPH) PILOT PROGRAM BETWEEN THE KOREAN INTELLECTUAL PROPERTY OFFICE (KIPO) AND THE USPTO

Application No:	12/467,890	Filing date:	May 18, 2009
First Named Inventor:	David Downey		
Title of the Invention:	Request for Information Related to Broadcast Network Content		

THIS REQUEST FOR PARTICIPATION IN THE PCT-PPH PILOT PROGRAM ALONG WITH THE REQUIRED DOCUMENTS MUST BE SUBMITTED VIA EFS-WEB. INFORMATION REGARDING EFS-WEB IS AVAILABLE AT HTTP://WWW.USPTO.GOV/EBC/EFS_HELP.HTML

APPLICANT HEREBY REQUESTS PARTICIPATION IN THE PCT-PPH PROGRAM AND PETITIONS TO MAKE THE ABOVE-IDENTIFIED APPLICATION SPECIAL UNDER THE PCT-PPH PROGRAM.

The above-identified application is (1) a national stage entry of the corresponding PCT application, or (2) a national stage entry of another PCT application which claims priority to the corresponding PCT application, or (3) a national application that claims domestic/ foreign priority to the corresponding PCT application, or (4) a national application which forms the basis for the priority claim in the corresponding PCT application, or (5) a continuing application of a U.S. application that satisfies one of (1) to (4) above, or (6) a U.S. application that claims domestic benefit to a U.S. provisional application which forms the basis for the priority claim in the corresponding PCT application.

The corresponding PCT application number(s) is/are: PCT/US2009/044395

The international date of the corresponding PCT application(s) is/are: May 18, 2009

I. List of Required Documents:

a. **A copy of the latest international work product (WO/ISA, WO/IPEA, or IPER) in the above–identified corresponding PCT application(s)**

[x] Is attached.

[ ] Is not attached because the document is already in the U.S. application.

b. **A copy of all claims which were indicated as having novelty, inventive step and industrial applicability in the above-identified corresponding PCT application(s).**

[x] Is attached.

[ ] Is not attached because the document is already in the U.S. application.

c. **English translations of the documents in a. and b. above are attached (if the documents are not in the English language). A statement that the English translation is accurate is attached for the document in b. above.**

This collection of information is required by 35 U.S.C. 119, 37 CFR 1.55, and 37 CFR 1.102(d). The information is required to obtain or retain a benefit by the public, which is to file (and by the USPTO to process) an application. Confidentiality is governed by 35 U.S.C. 122 and 37 CFR 1.11 and 1.14. This collection is estimated to take 2 hours to complete, including gathering, preparing, and submitting the completed application form to the USPTO. Time will vary depending upon the individual case. Any comments on the amount of time you require to complete this form and/or suggestions for reducing this burden should be sent to the Chief Information Officer, U.S. Patent and Trademark Office, U.S. Department of Commerce, P.O. Box 1450, Alexandria, VA 22313-1450. DO NOT SEND FEES OR COMPLETED FORMS TO THIS ADDRESS.

Approved for use through 01/31/2012. OMB 0651-0058
U.S.Patent and Trademark Office; U.S. DEPARTMENT OF COMMERCE

Under the Paperwork Reduction Act of 1995, no persons are required to respond to a collection of information unless it displays a valid OMB control number.

REQUEST FOR PARTICIPATION IN THE PCT-PPH PILOT PROGRAM BETWEEN THE KIPO AND THE USPTO

(continued)

Application No.:	12/467,890
First Named Inventor:	David Downey

d. **(1) An information disclosure statement listing the documents cited in the international work products (ISR, WO/ISA, WO/IPEA, IPER) of the corresponding PCT application.**

☐ Is attached

☒ Has already been filed in the above-identified U.S. application on January 8, 2010

(2) Copies of all documents (except) for U.S. patents or U.S. patent application publications)

☒ Are attached.

Have already been filed in the above-identified U.S. application on January 8, 2010

II. Claims Correspondence Table:

Claims in US Application	Patentable Claims in the corresponding PCT Application	Explanation regarding the correspondence
1-21	1-21	Claims are Identical
49-58	49-58	Claims are Identical
84-90	84-90	Claims are Identical

III. All the claims in the US application sufficiently correspond to the patentable claims in the corresponding PCT application.

Signature /Libby A. Huskey/	Date 11/11/2010
Name (Print/Typed) Libby A. Huskey	Registration Number 59,087

CLAIMS

What is claimed:

1. A method for use in providing information to users of a broadcast network, comprising the steps of:

providing a targeted asset system in connection with said broadcast network, wherein assets are targeted to said users of said broadcast network by matching target parameters of an asset to classification parameters of said users;

receiving, from a user equipment device of said broadcast network, request information regarding an indication of interest specific to a broadcast network user, said indication being associated with delivery of first broadcast content to said network user via said user equipment device;

using a data structure for making an association of said request information to a first information provider; and

based on said association, providing information of said first information provider from a remote location to said broadcast network user.

2. A method as set forth in claim 1, wherein said broadcast network comprises a cable television network and said step of receiving comprises processing a communication from a set top box based on an input from a remote control.

3. A method as set forth in claim 2, wherein said remote control is a multi-purpose remote control.

4. A method as set forth in claim 1, wherein said request information identifies a time of said input and a content stream of said first broadcast content.

5. A method as set forth in claim 1, wherein said request information identifies said first broadcast content.

6. A method as set forth in claim 1, wherein said step of providing comprises delivering said information to said network user.

7. A method as set forth in claim 6, wherein said information is delivered to said network user via a communications network different than said broadcast network.

8. A method as set forth in claim 7, wherein said information is delivered to said network user via one of access through a web-portal, e-mail, direct mail, or telephone.

9. A method as set forth in claim 1, wherein said step of providing information comprises forwarding information regarding said request to an agent for contacting said broadcast network user on behalf of said first information provider.

10. A method as set forth in claim 1, wherein said user equipment device is associated with multiple users and said method further comprises the step of identifying said broadcast network user associated with said input from among said multiple users.

11. A method as set forth in claim 1, wherein said first broadcast content is an advertisement.

12. A method as set forth in claim 11, wherein said advertisement is delivered during a break in programming.

13. A method as set forth in claim 1, wherein said targeted asset system is a targeted advertising system and said first broadcast content is an advertisement targeted to said broadcast network user.

14. A method as set forth in claim 1, further comprising the step of receiving, from said user equipment device of said broadcast network, one or more signals regarding a consumption status of said first broadcast content.

15. A method as set forth in claim 14, wherein said first broadcast content is an advertisement targeted to said broadcast network user.

16. A method as set forth in claim 14, further comprising the steps of:

establishing a rewards account for said broadcast network user; and

crediting value to said rewards account based on one of said indication of interest specific to said broadcast network user or said consumption status of said first broadcast content.

17. A method as set forth in claim 14, wherein said consumption status of said first broadcast content comprises information regarding non-consumed first broadcast content, and further comprising the step of adjusting a billing value based at least in part on said non-consumed first broadcast content.

18. A method as set forth in claim 14, further comprising the step of collecting, via a platform of said broadcast network, consumer behavior information associated with said network user.

19. A method as set forth in claim 18, wherein said consumer behavior information comprises information relating to purchasing decisions made by said network user.

20. A method as set forth in claim 18, further comprising the step of crediting value to said rewards account based on said consumer behavior information.

21. A method as set forth in claim 18, further comprising the step of correlating, via said platform of said broadcast network, said consumer behavior information with one of said indication of interest specific to said broadcast network user or said consumption status of said first broadcast content.

22. A method for use in providing information to users of a broadcast network, comprising the steps of:

receiving, via a first path from a user equipment device of said broadcast network, request information regarding an indication of interest specific to a broadcast network user, said indication being associated with delivery of first broadcast content to said broadcast network user via said user equipment device;

using a data structure for making an association of said request information to a first information provider; and

based on said association, transmitting information of said first information provider from a remote location to said broadcast network user via a second path that is independent of said user equipment device.

23. A method as set forth in claim 22, further providing a targeted asset system in connection with said broadcast network, wherein assets are targeted to said users of said broadcast network by matching target parameters of an asset to classification parameters of said users.

24. A method as set forth in claim 22, wherein said request information identifies said first broadcast content.

25. A method as set forth in claim 22, wherein said information of said first information provider is transmitted to said broadcast network user via a communications network different than said broadcast network.

26. A method as set forth in claim 25, wherein said information of said first information provider is transmitted to said network user via one of access through a web-portal, e-mail, direct mail, or telephone.

27. A method as set forth in claim 22, wherein said first broadcast content is an advertisement.

28. A method as set forth in claim 22, further comprising the step of receiving, from said user equipment device of said broadcast network, one or more signals regarding a consumption status of said first broadcast content.

29. A method as set forth in claim 22, further comprising the steps of:

establishing a rewards account for said broadcast network user; and

crediting value to said rewards account based on one of said indication of interest specific to said broadcast network user or said consumption status of said first broadcast content.

30. A method as set forth in claim 29, further comprising the step of collecting, via a platform of said broadcast network, consumer behavior information associated with said network user.

31. A method as set forth in claim 30, further comprising the step of crediting value to said rewards account based on said consumer behavior information.

32. A method as set forth in claim 30, further comprising the step of correlating, via said platform of said broadcast network, said consumer behavior information with one of said indication of interest specific to said broadcast network user or said consumption status of said first broadcast content.

33. A method for use in connection with the delivery of content to users of multiple communications networks, comprising:

monitoring a usage of a first user equipment device of a first network, wherein said user equipment device is associated with multiple users;

identifying a first network user, from among said multiple users, associated with said usage of said user equipment device of said first network; and

based on said monitored usage, delivering an asset to said first user via a second network different than said first network.

34. A method as set forth in claim 33, further comprising the step of determining a second network address that corresponds to said first user on said second network.

35. A method as set forth in claim 34, wherein said second network address comprises one of a mailing address, a street address, an e-mail address, or a telephone number.

36. A method as set forth in claim 33, wherein said asset is delivered to said first network user via one of access through a web-portal, e-mail, direct mail, or telephone.

37. A method as set forth in claim 33, further providing a targeted asset system in connection with said first network, wherein assets are targeted to said users of said first network by matching target parameters of an asset to classification parameters of said users.

38. A method as set forth in claim 33, further comprising the step of collecting, via a platform of said first network, consumer behavior information associated with said first network user.

39. A method as set forth in claim 38, further comprising the step of correlating, via said platform of said broadcast network, said consumer behavior information with said delivery of said asset.

40. A method for use in providing information to users of a broadcast network, comprising the steps of:

providing a targeted asset system in connection with said broadcast network, wherein assets are targeted to said users of said broadcast network by matching targeting parameters of an asset to classification parameters of said users;

receiving, from a user equipment device of said broadcast network, request information regarding an indication of interest specific to a broadcast network user, said indication being associated with delivery of a first targeted asset to said network user via said network equipment device; and

based on said request information, delivering a second asset to said broadcast network user via a second network different than said first broadcast network.

41. A method as set forth in claim 40, wherein said request information identifies said first targeted asset.

42. A method as set forth in claim 40, wherein said first targeted asset is an advertisement.

43. A method as set forth in claim 40, wherein said second asset is delivered to said broadcast network user via one of access through a web-portal, e-mail, direct mail, or telephone.

44. A method as set forth in claim 40, further comprising the step of receiving, from said user equipment device of said broadcast network, one or more signals regarding a consumption status of said first targeted asset.

45. A method as set forth in claim 40, further comprising the steps of:

establishing a rewards account for said broadcast network user; and

crediting value to said rewards account based on one of said indication of interest specific to said broadcast network user or said consumption status of said first targeted asset.

46. A method as set forth in claim 45, further comprising the step of collecting, via a platform of said broadcast network, consumer behavior information associated with said broadcast network user.

47. A method as set forth in claim 46, further comprising the step of crediting value to said rewards account based on said consumer behavior information.

48. A method as set forth in claim 46, further comprising the step of correlating, via said platform of said broadcast network, said consumer behavior information with said consumption status of said first targeted asset or said indication of interest specific to said broadcast network user.

49. An apparatus for use in providing information to users of a broadcast network, comprising:

data structure for receiving, via a first path from a user equipment device of said broadcast network, request information regarding an input from a broadcast network user, said input being associated with delivery of first broadcast content to said broadcast network user via said user equipment device; and

a processor operative for making an identification of said request information to a first information provider and, based on said identification, outputting information of said

first information provider from a remote location to a second network device via a second path, wherein said second network device is different than said user equipment device and said second path is separate from said user equipment device.

50. An apparatus as set forth in claim 49, wherein said request information identifies said first broadcast content.

51. An apparatus as set forth in claim 49, wherein said information of said first information provider is output to said second network device via a communications network different than said broadcast network.

52. An apparatus as set forth in claim 49, wherein said information of said first information provider is output to said network user via one of access through a web-portal, e-mail, direct mail, or telephone.

53. An apparatus as set forth in claim 49, wherein said first broadcast content is an advertisement.

54. An apparatus as set forth in claim 49 wherein said data structure is configured to receive, from said user equipment device of said broadcast network, one or more signals regarding a consumption status of said first broadcast content.

55. An apparatus as set forth in claim 54, further comprising a rewards platform for establishing a rewards account for said broadcast network user, wherein value is credited to said rewards account based on one of said consumption status of said first broadcast content or said input from said broadcast network user.

56. An apparatus as set forth in claim 55, further comprising a request for information platform for collecting consumer behavior information associated with said broadcast network user.

57. An apparatus as set forth in claim 56, wherein value is credited to said rewards account based on said consumer behavior information.

58. An apparatus as set forth in claim 56, wherein said request for information platform includes a processor is operative to correlate said consumer behavior information with one of said consumption status of said first broadcast content or said input from said broadcast network user.

59. A method for use in connection with the delivery of content to users of multiple communications networks, comprising:

monitoring a usage of a first communications network by a first user to obtain an indication of interest with respect to content delivered to said first user via a user equipment device, wherein said indication of interest is received via a first path from said user equipment device; and

based on said monitored usage, delivering an asset to a second user, the same or different than the first user, via a second path separate from said user equipment device and on a second communications network different than said first network, said asset having a subject matter associated with said content delivered via said first communications network.

60. A method as set forth in claim 59, further comprising the step of determining a second network address that corresponds to the second user on the second communications network.

61. A method as set forth in claim 59, wherein said asset is delivered to said second user via one of access through a web-portal, e-mail, direct mail, or telephone.

62. A method as set forth in claim 59, wherein said content comprises an advertisement.

63. A method as set forth in claim 59, further comprising the step of receiving, from said user equipment device of said first communications network, one or more signals regarding a consumption status of said content.

64. A method as set forth in claim 59, further comprising the steps of:

establishing a rewards account for said first user; and

crediting value to said rewards account based on one of said consumption status of said content or said indication of interest with respect to said content.

65. A method as set forth in claim 64, further comprising the step of collecting, via a platform of said first communications network, consumer behavior information associated with said first or second users.

66. A method as set forth in claim 65, further comprising the step of crediting value to said rewards account based on said consumer behavior information.

67. A method as set forth in claim 65, further comprising the step of correlating, via said platform of said first communications network, said consumer behavior information with one of said consumption status of said content or said indication of interest with respect to said content.

68. A method for use in providing information to users of a broadcast network, comprising the steps of:

receiving, from a user equipment device of said broadcast network, one or more signals regarding a consumption status associated with delivery of a first targeted asset to a broadcast network user via said user equipment device;

receiving, from said user equipment device of said broadcast network, request information regarding an indication of interest specific to said broadcast network user, said indication of interest being associated with said delivery of said first targeted asset;

collecting, via a platform of said broadcast network, consumer behavior information associated with said network user; and

crediting value to a rewards account of said broadcast network user based on one of said consumption status of said first targeted asset, said indication of interest, or said consumer behavior information associated with said network user.

69. The method as set forth in claim 68, further comprising the step of delivering, based on said request information, a second asset to said network user via a second network different than said broadcast network.

70. The method as set forth in claim 69, further comprising the step of correlating, via said platform of said broadcast network, said consumer behavior information with one of said consumption status of said first targeted asset or said indication of interest.

71. A method as set forth in claim 69, further comprising the step of receiving, via a user interface associated with said rewards account, classification information associated with said network user.

72. A method as set forth in claim 69, wherein said classification information includes one of contact information, demographic information, lifestyle information, consent information, or product interests.

73. A method as set forth in claim 69, wherein said value credited to said rewards account includes one of service credits, service upgrades, monetary rewards, product discounts, or product credits.

74. A method as set forth in claim 69, wherein said consumption status of said first targeted asset comprises information regarding non-consumed portions of said first targeted asset.

75. A method as set forth in claim 74, further comprising the step of adjusting a billing value based at least in part said non-consumed portions of said first targeted asset.

76. A method as set forth in claim 75, wherein said consumer behavior information comprises information relating to purchasing decisions made by said network user.

77. A method for use in providing information to users of a broadcast network, comprising the steps of:

delivering, via a user equipment device, first broadcast content to a broadcast network user, wherein said first broadcast content includes a request for information icon ("RFI icon") that indicates an availability of follow-on information corresponding to said first broadcast content;

providing a network platform, separate from said user equipment device, for receiving request information, wherein said request information is associated with a request for information input ("RFI input") from said broadcast network user, and wherein said RFI input is in response to said RFI icon;

receiving, at said network platform, said request information;

based on said request information, identifying a date, time, and programming channel selection associated with said RFI input; and

based on said date, time, and programming channel selection, accessing a database at said network platform to identify a subject matter associated with said RFI input.

78. A method as set forth in claim 77, wherein said RFI input is entered contemporaneously with the display of said RFI icon.

79. A method as set forth in claim 77, further comprising providing said follow-on information to said first broadcast user via a web-portal.

80. A method as set forth in claim 79, wherein said web-portal is accessible to said first broadcast user via a mobile computing device.

81. A method as set forth in claim 79, further comprising receiving, from said broadcast network user, consumer behavior information for said broadcast network user via said web-portal.

82. A method as set forth in claim 79, wherein said web-portal is linked to one or more third-party databases.

83. A method as set forth in claim 82, further comprising receiving, from said one or more third-party databases, consumer behavior information for said broadcast network user via said web-portal.

84. A method for use in providing information to users of a broadcast network, comprising the steps of:

delivering, via a user equipment device, first broadcast content to a broadcast network user, wherein said first broadcast content includes a request for information icon ("RFI icon") that indicates an availability of follow-on information corresponding to said first broadcast content;

providing a network platform, separate from said user equipment device, for receiving request information, wherein said request information is associated with a request for information input ("RFI input") from said broadcast network user, and wherein said RFI input is in response to said RFI icon;

receiving, at said network platform, said request information; and

based on said request information, identifying a subject matter of said first broadcast content.

85. A method as set forth in claim 84, wherein said RFI input is entered contemporaneously with the display of said RFI icon.

86. A method as set forth in claim 84, further comprising providing said follow-on information to said first broadcast user via a web-portal.

87. A method as set forth in claim 86, wherein said web-portal is accessible to said first broadcast user via a mobile computing device.

88. A method as set forth in claim 86, further comprising receiving, from said broadcast network user, consumer behavior information for said broadcast network user via said web-portal.

89. A method as set forth in claim 86, wherein said web-portal is linked to one or more third-party databases.

90. A method as set forth in claim 89, further comprising receiving, from said one or more third-party databases, consumer behavior information for said broadcast network user via said web-portal.

PATENT COOPERATION TREATY

From the INTERNATIONAL SEARCHING AUTHORITY

To:

HUSKEY LIBBY A.

8055 E. TUFTS AVENUE SUITE 450 DENVER CO 80237
USA

RECEIVED
JAN - 4 2010
MARSH FISCHMANN & BREYFOGLE LLP

PCT

NOTIFICATION OF TRANSMITTAL OF THE INTERNATIONAL SEARCH REPORT AND THE WRITTEN OPINION OF THE INTERNATIONAL SEARCHING AUTHORITY, OR THE DECLARATION

(PCT Rule 44.1)

Applicant's or agent's file reference 50196-00138	Date of mailing *(day/month/year)* 28 DECEMBER 2009 (28.12.2009) **FOR FURTHER ACTION** See paragraphs 1 and 4 below
International application No. **PCT/US2009/044395**	International filing date *(day/month/year)* **18 MAY 2009 (18.05.2009)**
Applicant **INVIDI TECHNOLOGIES CORPORATION et al**	

1. ☒ The applicant is hereby notified that the international search report and the written opinion of the International Searching Authority have been established and are transmitted herewith.
   Filing of amendments and statement under Article 19:
   The applicant is entitled, if he so wishes, to amend the claims of the international application (see Rule 46):
   When? The time limit for filing such amendments is normally two months from the date of transmittal of the international search report.
   Where? Directly to the International Bureau of WIPO, 34 chemin des Colombettes 1211 Geneva 20, Switzerland, Facsimile No.: +41 22 338 82 70
   For more detailed instructions, see the notes on the accompanying sheet.

2. ☐ The applicant is hereby notified that no international search report will be established and that the declaration under Article 17(2)(a) to that effect and the written opinion of the International Searching Authority are transmitted herewith.

3. ☐ **With regard to any protest** against payment of (an) additional fee(s) under Rule 40.2, the applicant is notified that:
   ☐ the protest together with the decision thereon has been transmitted to the International Bureau together with the applicant's request to forward the texts of both the protest and the decision thereon to the designated Offices.
   ☐ no decision has been made yet on the protest; the applicant will be notified as soon as a decision is made.

4. **Reminders**

Shortly after the expiration of **18 months** from the priority date, the international application will be published by the International Bureau. If the applicant wishes to avoid or postpone publication, a notice of withdrawal of the international application, or of the priority claim, must reach the International Bureau as provided in Rules 90*bis*.1 and 90*bis*.3, respectively, before the completion of the technical preparations for international publication.

The applicant may submit comments on an informal basis on the written opinion of the International Searching Authority to the International Bureau. The International Bureau will send a copy of such comments to all designated Offices unless an international preliminary examination report has been or is to be established. These comments would also be made available to the public but not before the expiration of 30 months from the priority date.

Within **19 months** from the priority date, but only in respect of some designated Offices, a demand for international preliminary examination must be filed if the applicant wishes to postpone the entry into the national phase **until 30 months** from the priority date (in some Offices even later); otherwise, the applicant must, **within 20 months** from the priority date, perform the prescribed acts for entry into the national phase before those designated Offices.

In respect of other designated Offices, the time limit of **30 months** (or later) will apply even if no demand is filed within 19 months.

See the Annex to Form PCT/IB/301 and, for details about the applicable time limits, Office by Office, see the *PCT Applicant's Guide*, National Chapters.

Name and mailing address of the ISA/KR Korean Intellectual Property Office Government Complex-Daejeon, 139 Seonsa-ro, Seo-gu, Daejeon 302-701, Republic of Korea Facsimile No. 82-42-472-7140	Authorized officer COMMISSIONER Telephone No. 82-42-481-5207

NOTES TO FORM PCT/ISA/220

These Notes are intended to give the basic instructions concerning the filing of amendments under Article 19. The Notes are based on the requirements of the Patent Cooperation Treaty, the Regulations and the Administrative Instructions under that Treaty. In case of discrepancy between these Notes and those requirements, the latter are applicable. For more detailed information, see also the *PCT Applicant's Guide*.

In these Notes, "Article", "Rule" and "Section" refer to the provisions of the PCT, the PCT Regulations and the PCT Administrative Instructions, respectively.

INSTRUCTIONS CONCERNING AMENDMENTS UNDER ARTICLE 19

The applicant has, after having received the international search report and the written opinion of the International Searching Authority, one opportunity to amend the claims of the international application. It should however be emphasized that, since all parts of the international application (claims, description and drawings) may be amended during the international preliminary examination procedure, there is usually no need to file amendments of the claims under Article 19 except where, e.g. the applicant wants the latter to be published for the purposes of provisional protection or has another reason for amending the claims before international publication. Furthermore, it should be emphasized that provisional protection is available in some States only (see *PCT Applicant's Guide*, Annex B).

The attention of the applicant is drawn to the fact that ammendments to the claims under Article 19 are not allowed where the International Searching Authority has declared, under Article 17(2), that no international search report would be established (see *PCT Applicant's Guide*, paragraph 296).

What parts of the international application may be amended ?

Under Article 19, only the claims may be amended.

During the international phase, the claims may also be amended (or further amended) under Article 34 before the International Preliminary Examining Authority. The description and drawings may only be amended under Article 34 before the International Preliminary Examining Authority.

Upon entry into the national phase, all parts of the international application may be amended under Article 28 or, where applicable, Article 41.

When ? Within 2 months from the date of transmittal of the international search report or 16 months from the priority date, whichever time limit expires later. It should be noted, however, that the amendments will be considered as having been received on time if they are received by the International Bureau after the expiration of the applicable time limit but before the completion of the technical preparations for international publication (Rule 46.1).

Where not to file the amendments ?

The amendments may only be filed with the International Bureau and not with the receiving Office or the International Searching Authority (Rule 46.2).

Where a demand for international preliminary examination has been/is filed, see below.

How ? Either by cancelling one or more entire claims, by adding one or more new claims or by amending the text of one or more of the claims as filed.

A replacement sheet or sheets containing a complete set of claims in replacement of all the claims previously filed must be submitted.
Where a claim is cancelled, no renumbering of the other claims is required. In all cases where claims are renumbered, they must be renumbered consecutively in Arabic numerals (Section 205(a)).

The amendments must be made in the language in which the international application is to be published.

What documents must/may accompany the amendments ?

Letter (Section 205(b)):
The amendments must be submitted with a letter.
The letter will not be published with the international application and the amended claims. It should not be confused with the "Statement under Article 19(1)" (see below,under "Statement under Article 19(1)").
The letter must be in English or French, at the choice of the applicant. However, if the language of the international application is English, the letter must be in English; if the language of the international application is French, the letter must be in French.

NOTES TO FORM PCT/ISA/220 (continued)

The letter must indicate the differences between the claims as filed and the claims as amended. It must, in particular, indicate, in connection with each claim appearing in the international application (it being understood that identical indications concerning several claims may be grouped), whether

(i) the claim is unchanged;
(ii) the claim is cancelled;
(iii) the claim is new;
(iv) the claim replaces one or more claims as filed;
(v) the claim is the result of the division of a claim as filed.

The following examples illustrate the manner in which amendments must be explained in the accompanying letter:

1. [Where originally there were 48 claims and after amendment of some claims there are 51]:
   "Claims 1 to 29, 31, 32, 34, 35, 37 to 48 replaced by amended claims bearing the same numbers; claims 30, 33 and 36 unchanged; new claims 49 to 51 added."
2. [Where originally there were 15 claims and after amendment of all claims there are 11]:
   "Claims 1 to 15 replaced by amended claims 1 to 11."
3. [Where originally there were 14 claims and the amendments consist in cancelling some claims and in adding new claims]:
   "Claims 1 to 6 and 14 unchanged; claims 7 to 13 cancelled; new claims 15, 16 and 17 added." or
   "Claims 7 to 13 cancelled; new claims 15, 16 and 17 added; all other claims unchanged."
4. [Where various kinds of amendments are made]:
   "Claims 1 - 10 unchanged; claims 11 to 13, 18 and 19 cancelled; claims 14, 15 and 16 replaced by amended claim 14; claim 17 subdivided into amended claims 15, 16 and 17; new claims 20 and 21 added."

"Statement under Article 19(1)" (Rule 46.4)

The amendments may be accompanied by a statement explaining the amendments and indicating any impact that such amendments might have on the description and the drawings (which cannot be amended under Article 19(1)).

The statement will be published with the international application and the amended claims.

It must be in the language in which the international application is to be published.

It must be brief, not exceeding 500 words if in English or if translated into English.

It should not be confused with and does not replace the letter indicating the differences between the claims as filed and as amended. It must be filed on a separate sheet and must be indentified as such by a heading, preferably by using the words "Statement under Article 19(1)."

It may not contain any disparaging comments on the international search report or the relevance of citations contained in that report. Reference to citations, relevant to a given claim, contained in the international search report may be made only in connection with an amendment of that claim.

Consequence if a demand for international preliminary examination has already been filed

If, at the time of filing any amendments and any accompanying statement, under Article 19, a demand for international preliminary examination has already been submitted, the applicant must preferably, at the time of filing the amendments (and any statement) with the International Bureau, also file with the International Preliminary Examining Authority a copy of such amendments (and of any statement) and, where required, a translation of such amendments for the proceduer before that Authority (see Rules 55.3(a) and 62.2, first sentence). For further information, see the Notes to the demand form (PCT/IPEA/401).

If a demand for international preliminary examination is made, the written opinion of the International Searching Authority will, except in certain cases where the International Preliminary Examining Authority did not act as International Searching Authority and where it has notified the International Bureau under Rule 66.1*bis*(b), be considered to be a written opinion of the International Preliminary Examining Authority. If a demand is made, the applicant may submit to the International Preliminary Examining Authority a reply to the written opinion together, where appropriate, with amendments before the expiration of 3 months from the date of mailing of Form PCT/ISA/220 or before the expiration of 22 months from the priority date, whichever expires later (Rule 43*bis*.1(c)).

Consequence with regard to translation of the international application for entry into the national phase

The applicant's attention is drawn to the fact that, upon entry into the national phase, a translation of the claims as amended under Article 19 may have to be furnished to the designated/elected Offices, instead of, or in addition to , the translation of the claims as filed.

For further details on the requirements of each designated/elected Office, see the *PCT Applicant's Guide*, National Chapters.

* Attention

Copies of the documents cited in the international search report can be searched in the following Korean Intellectual Property Office English website for three months from the date of mailing of the international search report.

http://www.kipo.go.kr/en/ => Patent Search => PCT-Service

ID : PCT international application number
PW : **TURWHN3U**

Inquiries related to PCT International Search Report or Written Opinion prepared by KIPO as an International Searching Authority can be answered not only by KIPO but also through IPKC (Intellectual Property Korea Center), located in Vienna, VA, which functions as a PCT Help Desk for PCT applicants.

Homepage: http://www.ipkcenter.com
Email: ipkc@ipkcenter.com
Phone: +1 703 388 1066
Fax: +1 703 388 1084

PATENT COOPERATION TREATY

From the
INTERNATIONAL SEARCHING AUTHORITY

To:
HUSKEY LIBBY A.

8055 E. TUFTS AVENUE SUITE 450 DENVER CO 80237
USA

RECEIVED
JAN 4 2010
MARSH FISCHMANN & BREYFOGLE LLP

PCT

WRITTEN OPINION OF THE INTERNATIONAL SEARCHING AUTHORITY

(PCT Rule 43bis.1)

Date of mailing *(day/month/year)*	**28 DECEMBER 2009 (28.12.2009)**
Applicant's or agent's file reference 50196-00138	**FOR FURTHER ACTION** See paragraph 2 below

International application No.	International filing date *(day/month/year)*	Priority date *(day/month/year)*
PCT/US2009/044395	**18 MAY 2009 (18.05.2009)**	16 MAY 2008 (16.05.2008)

International Patent Classification (IPC) or both national classification and IPC

G06Q 50/00(2006.01)i, G06Q 30/00(2006.01)i, G06F 17/00(2006.01)i

Applicant

INVIDI TECHNOLOGIES CORPORATION et al

1. This opinion contains indications relating to the following items:

- [x] Box No. I Basis of the opinion
- [ ] Box No. II Priority
- [ ] Box No. III Non-establishment of opinion with regard to novelty, inventive step and industrial applicability
- [ ] Box No. IV Lack of unity of invention
- [x] Box No. V Reasoned statement under Rule 43bis.1(a)(i) with regard to novelty, inventive step or industrial applicability; citations and explanations supporting such statement
- [ ] Box No. VI Certain documents cited
- [ ] Box No. VII Certain defects in the international application
- [ ] Box No. VIII Certain observations on the international application

2. **FURTHER ACTION**
If a demand for international preliminary examination is made, this opinion will be considered to be a written opinion of the International Preliminary Examining Authority ("IPEA") except that this does not apply where the applicant chooses an Authority other than this one to be the IPEA and the chosen IPEA has notified the International Bureau under Rule 66.1bis(b) that written opinions of this International Searching Authority will not be so considered.

If this opinion is, as provided above, considered to be a written opinion of the IPEA, the applicant is invited to submit to the IPEA a written reply together, where appropriate, with amendments, before the expiration of 3 months from the date of mailing of Form PCT/ISA/220 or before the expiration of 22 months from the priority date, whichever expires later.
For further options, see Form PCT/ISA/220.

3. For further details, see notes to Form PCT/ISA/220.

Name and mailing address of the ISA/KR	Date of completion of this opinion	Authorized officer
Korean Intellectual Property Office Government Complex-Daejeon, 139 Seonsa-ro, Seo-gu, Daejeon 302-701, Republic of Korea Facsimile No. 82-42-472-7140	23 DECEMBER 2009 (23.12.2009)	KYE, Won Ho Telephone No.82-42-481-8375

WRITTEN OPINION OF THE
INTERNATIONAL SEARCHING AUTHORITY

International application No.
PCT/US2009/044395

Box No. I Basis of this opinion

1. With regard to the **language**, this opinion has been established on the basis of :

   ☒ the international application in the language in which it was filed

   ☐ a translation of the international application into _____ , which is the language of a translation furnished for the purposes of international search (Rules 12.3(a) and 23.1(b))

2. ☐ This opinion has been established taking into account the **rectification of an obvious mistake** authorized by or notified to this Authority under Rule 91 (Rule 43*bis*.1(a))

3. With regard to any **nucleotide and/or amino acid sequence** disclosed in the international application, this opinion has been established on the basis of:

   a. type of material

   ☐ a sequence listing

   ☐ table(s) related to the sequence listing

   b. format of material

   ☐ on paper

   ☐ in electronic form

   c. time of filing/furnishing

   ☐ contained in the international application as filed.

   ☐ filed together with the international application in electronic form.

   ☐ furnished subsequently to this Authority for the purposes of search.

4. ☐ In addition, in the case that more than one version or copy of a sequence listing and/or table relating thereto has been filed or furnished, the required statements that the information in the subsequent or additioanl copies is identical to that in the application as filed or does not go beyond the application as filed, as appropriate, were furnished.

5. Additional comments:

WRITTEN OPINION OF THE INTERNATIONAL SEARCHING AUTHORITY

International application No.
PCT/US2009/044395

Box No. V Reasoned statement under Rule 43bis.1(a)(i) with regard to novelty, inventive step or industrial applicability; citations and explanations supporting such statement

1. Statement

Novelty (N)	Claims	1-90	YES
	Claims	NONE	NO
Inventive step (IS)	Claims	1-90	YES
	Claims	NONE	NO
Industrial applicability (IA)	Claims	1-90	YES
	Claims	NONE	NO

2. Citations and explanations :

Reference is made to the following documents:

D1: US 2005-0015803 A1 (MACRAE DOUGLAS B. et al.) 20 January 2005
D2: US 2005-0076384 A1 (MANISH UPENDRAN et al.) 07 April 2005
D3: KR 10-2007-0024039 A (LEE, CHUN SOO) 02 March 2007
D4: KR 10-2007-0061601 A (GS HOME SHOPPING CO., LTD.) 14 June 2007

1. Novelty and Inventive Step

1.1 Claims 1-21

The subject matter of claim 1 differs from these prior art documents in that the method includes the step of providing a target asset system wherein asset are targeted to user by matching target parameters and receiving, from a user equipment device of said broadcast network,request information regarding an indication of interest specific to broadcast network user. And it is not obvious to a person skilled in the art by the documents, taken alone or in combination. Therefore, claim 1 meets the requirements of PCT Article 33(2) and (3) with respect to novelty and inventive step.

Claims 2-21 are dependent on claim 1 and therefore meet the requirements of PCT Article 33(2) and (3).

1.2 Claims 22-32

The subject matter of claim 22 differs from these prior art documents in that the method includes the step of receiving, from a user equipment device of said broadcast network, request information regarding an indication of interest specific to broadcast network userand using a data structure for making an association of request information. And it is not obvious to a person skilled in the art by the documents, taken alone or in combination. Therefore, claim 22 meets the requirements of PCT Article 33(2) and (3) with respect to novelty and inventive step.

Claims 23-32 are dependent on claim 22 and therefore meet the requirements of PCT Article 33(2) and (3).

Continued on Supplemental Box

Supplemental Box

In case the space in any of the preceding boxes is not sufficient.
Continuation of :

Box V

1.3 Claims 33-39

The subject matter of claim 33 differs from these prior art documents in that the method includes the step of identifying a first network user from among multiple users, associated with usage of user equipment device of first network. And it is not obvious to a person skilled in the art by the documents, taken alone or in combination. Therefore, claim 33 meets the requirements of PCT Article 33(2) and (3) with respect to novelty and inventive step.

Claims 34-39 are dependent on claim 33 and therefore meet the requirements of PCT Article 33(2) and (3).

1.4 Claims 40-48

The subject matter of claim 40 differs from these prior art documents in that the method includes the steps of providing a target asset system wherein asset are targeted to user by matching target parameters and receiving, from a user equipment device of said broadcast network, request information regarding an indication of interest specific to broadcast network user. And it is not obvious to a person skilled in the art by the documents, taken alone or in combination. Therefore, claim 40 meets the requirements of PCT Article 33(2) and (3) with respect to novelty and inventive step.

Claims 41-48 are dependent on claim 40 and therefore meet the requirements of PCT Article 33(2) and (3).

1.5 Claims 49-58

The subject matter of claim 49 differs from these prior art documents in that the apparatus comprises data structure for receiving via first path from a user equipment device of broadcast network, request information regarding an input from a broadcast network user, inputbeing associated with delivery of first broadcast content to broadcast network user. And it is not obvious to a person skilled in the art by the documents, taken alone or in combination. Therefore, claim 49 meets the requirements of PCT Article 33(2) and (3) with respect to novelty and inventive step.

Claims 50-58 are dependent on claim 49 and therefore meet the requirements of PCT Article 33(2) and (3).

Continued on Supplemental Box

Supplemental Box

In case the space in any of the preceding boxes is not sufficient.
Continuation of :

1.6 Claims 59-67

The subject matter of claim 59 differs from these prior art documents in that the method includes the step of identifying a first network user from among multiple users, associated with usage of user equipment device of first network. And it is not obvious to a person skilled in the art by the documents, taken alone or in combination. Therefore, claim 59 meets the requirements of PCT Article 33(2) and (3) with respect to novelty and inventive step.

Claims 60-67 are dependent on claim 59 and therefore meet the requirements of PCT Article 33(2) and (3).

1.7 Claims 68-76

The subject matter of claim 68 differs from these prior art documents in that the method includes the step of identifying a first network user from among multiple users, associated with usage of user equipment device of first network. And it is not obvious to a person skilled in the art by the documents, taken alone or in combination. Therefore, claim 68 meets the requirements of PCT Article 33(2) and (3) with respect to novelty and inventive step.

Claims 69-76 are dependent on claim 68 and therefore meet the requirements of PCT Article 33(2) and (3).

1.8 Claims 77-83

The subject matter of claim 77 differs from these prior art documents in that the method includes the steps ofproviding a network platform, separate from user equipment device, for receiving information and receiving at network platform, request information and programming channel selection association with RFI input. And it is not obvious to a person skilled in the art by the documents, taken alone or in combination. Therefore, claim 77 meets the requirements of PCT Article 33(2) and (3) with respect to novelty and inventive step.

Claims 78-83 are dependent on claim 33and therefore meet the requirements of PCT Article 33(2) and (3).

Continued on Supplemental Box

Supplemental Box

In case the space in any of the preceding boxes is not sufficient.
Continuation of :

1.9 Claims 84-90

The subject matter of claim 84 differs from these prior art documents in that the method includes the step of receiving at network platform, request information and identifying a subject matter of broadcast content. And it is not obvious to a person skilled in the art by the documents, taken alone or in combination. Therefore, claim 84 meets the requirements of PCT Article 33(2) and (3) with respect to novelty and inventive step.

Claims 85-90 are dependent on claim 33 and therefore meet the requirements of PCT Article 33(2) and (3).

2. Industrial Applicability

Claims 1-90 are industrially applicable under PCT Article 33(4).

PATENT COOPERATION TREATY

PCT

INTERNATIONAL SEARCH REPORT

(PCT Article 18 and Rules 43 and 44)

Applicant's or agent's file reference 50196-00138	**FOR FURTHER ACTION**	see Form PCT/ISA/220 as well as, where applicable, item 5 below.
International application No. **PCT/US2009/044395**	International filing date *(day/month/year)* **18 MAY 2009 (18.05.2009)**	(Earliest) Priority Date *(day/month/year)* 16 MAY 2008 (16.05.2008)
Applicant **INVIDI TECHNOLOGIES CORPORATION et al**		

This International search report has been prepared by this International Searching Authority and is transmitted to the applicant according to Article 18. A copy is being transmitted to the International Bureau.

This international search report consists of a total of 3 sheets.

☐ It is also accompanied by a copy of each prior art document cited in this report.

1. **Basis of the report**
   a. With regard to the **language**, the international search was carried out on the basis of :
      ☒ the international application in the language in which it was filed
      ☐ a translation of the international application into _____ , which is the language of a translation furnished for the purposes of international search (Rules 12.3(a) and 23.1(b))
   b. ☐ This international search report has been established taking into account the **rectification of an obvious mistake** authorized by or notified to this Authority under Rule 91 (Rule 43.6*bis*(a)).
   c. ☐ With regard to any **nucleotide and/or amino acid sequence** disclosed in the international application, see Box No. I.
2. ☐ **Certain claims were found unsearchable** (See Box No. II)
3. ☐ **Unity of invention is lacking** (See Box No. III)
4. With regard to the **title**,
   ☒ the text is approved as submitted by the applicant.
   ☐ the text has been established by this Authority to read as follows:
5. With regard to the **abstract**,
   ☒ the text is approved as submitted by the applicant.
   ☐ the text has been established, according to Rule 38.2, by this Authority as it appears in Box No. IV. The applicant may, within one month from the date of mailing of this international search report, submit comments to this Authority.
6. With regard to the drawings,
   a. the figure of the **drawings** to be published with the abstract is Figure No. 8
      ☒ as suggested by the applicant.
      ☐ as selected by this Authority, because the applicant failed to suggest a figure.
      ☐ as selected by this Authority, because this figure better characterizes the invention.
   b. ☐ none of the figure is to be published with the abstract.

INTERNATIONAL SEARCH REPORT

International application No.
PCT/US2009/044395

A. CLASSIFICATION OF SUBJECT MATTER

G06Q 50/00(2006.01)i, G06Q 30/00(2006.01)i, G06F 17/00(2006.01)i

According to International Patent Classification (IPC) or to both national classification and IPC

B. FIELDS SEARCHED

Minimum documentation searched (classification system followed by classification symbols)
G06Q 50/00; G06F 13/00; G06Q 30/00E0; H04L 12/16; H04L 12/28; H04N 5/445; H04N 7/16; H04N 7/173

Documentation searched other than minimum documentation to the extent that such documents are included in the fields searched
Korean utility models and applications for utility models since 1975.
Japanese utility models and applications for utility models since 1975.

Electronic data base consulted during the international search (name of data base and, where practicable, search terms used)
eKOMPASS(KIPO internal) & Keywords: " broadcast network, request for information, digital set top box, asset, target parameter"

C. DOCUMENTS CONSIDERED TO BE RELEVANT

Category*	Citation of document, with indication, where appropriate, of the relevant passages	Relevant to claim No.
A	US 2005-0015803 A1 (MACRAE DOUGLAS B. et al.) 20 January 2005 See abstract; figures 1-8; pages 2-7; claims 1-19	1-90
A	US 2005-0076384 A1 (MANISH UPENDRAN et al.) 07 April 2005 See abstract; figures 1A-4B; pages 1-7; claims 1-11	1-90
A	KR 10-2007-0024039 A (LEE, CHUN SOO) 02 March 2007 See abstract; figures 1-3; pages 1-2; claims 1-6	1-90
A	KR 10-2007-0061601 A (GS HOME SHOPPING CO., LTD.) 14 June 2007 See abstract; figures 1-3; pages 2-4; claims 1-7	1-90

☐ Further documents are listed in the continuation of Box C. ☒ See patent family annex.

* Special categories of cited documents:
"A" document defining the general state of the art which is not considered to be of particular relevance
"E" earlier application or patent but published on or after the international filing date
"L" document which may throw doubts on priority claim(s) or which is cited to establish the publication date of citation or other special reason (as specified)
"O" document referring to an oral disclosure, use, exhibition or other means
"P" document published prior to the international filing date but later than the priority date claimed
"T" later document published after the international filing date or priority date and not in conflict with the application but cited to understand the principle or theory underlying the invention
"X" document of particular relevance; the claimed invention cannot be considered novel or cannot be considered to involve an inventive step when the document is taken alone
"Y" document of particular relevance; the claimed invention cannot be considered to involve an inventive step when the document is combined with one or more other such documents,such combination being obvious to a person skilled in the art
"&" document member of the same patent family

Date of the actual completion of the international search	Date of mailing of the international search report
23 DECEMBER 2009 (23.12.2009)	**28 DECEMBER 2009 (28.12.2009)**

Name and mailing address of the ISA/KR	Authorized officer
Korean Intellectual Property Office Government Complex-Daejeon, 139 Seonsa-ro, Seo-gu, Daejeon 302-701, Republic of Korea Facsimile No. 82-42-472-7140	KYE, Won Ho Telephone No. 82-42-481-8375

INTERNATIONAL SEARCH REPORT

Information on patent family members

International application No.

PCT/US2009/044395

Patent document cited in search report	Publication date	Patent family member(s)	Publication date
US 2005-0015803 A1	20.01.2005	None	
US 2005-0076384 A1	07.04.2005	US 07346556 B2	18.03.2008
		US 07458093 B2	25.11.2008
		US 07516092 B2	07.04.2009
		US 2005-0049933 A1	03.03.2005
		US 2005-0049957 A1	03.03.2005
		US 2005-0050160 A1	03.03.2005
		US 2005-0050576 A1	03.03.2005
		US 2005-0076362 A1	07.04.2005
		US 2005-0076383 A1	07.04.2005
		US 2008-0033840 A1	07.02.2008
		WO 2005-022354 A2	10.03.2005
		WO 2005-022354 A3	10.03.2005
		WO 2005-022355 A2	10.03.2005
		WO 2005-022355 A3	10.03.2005
		WO 2005-022364 A2	10.03.2005
		WO 2005-022364 A3	10.05.2007
		WO 2005-022364 A3	10.03.2005
		WO 2005-022788 A2	10.03.2005
		WO 2005-022788 A3	10.03.2005
		WO 2005-022888 A2	10.03.2005
		WO 2005-022888 A3	10.03.2005
		WO 2005-022889 A2	10.03.2005
		WO 2005-022889 A3	10.03.2005
		WO 2005-022890 A2	10.03.2005
		WO 2005-022890 A3	10.03.2005
KR 10-2007-0024039 A	02.03.2007	None	
KR 10-2007-0061601 A	14.06.2007	None	

UNITED STATES PATENT AND TRADEMARK OFFICE

UNITED STATES DEPARTMENT OF COMMERCE
United States Patent and Trademark Office
Address: COMMISSIONER FOR PATENTS
P.O. Box 1450
Alexandria, Virginia 22313-1450
www.uspto.gov

APPLICATION NO.	FILING DATE	FIRST NAMED INVENTOR	ATTORNEY DOCKET NO.	CONFIRMATION NO.
12/467,890	05/18/2009	David Downey	50196-000136	8889

25231 7590 11/22/2010
MARSH, FISCHMANN & BREYFOGLE LLP
8055 East Tufts Avenue
Suite 450
Denver, CO 80237

EXAMINER
KOENIG, ANDREW Y

ART UNIT	PAPER NUMBER
2423	

MAIL DATE	DELIVERY MODE
11/22/2010	PAPER

Please find below and/or attached an Office communication concerning this application or proceeding.

The time period for reply, if any, is set in the attached communication.

UNITED STATES PATENT AND TRADEMARK OFFICE

Commissioner for Patents
United States Patent and Trademark Office
P.O. Box 1450
Alexandria, VA 22313-1450
www.uspto.gov

MARSH, FISCHMANN & BREYFOGLE LLP
8055 East Tufts Avenue
Suite 450
Denver CO 80237

In re Application of: David Downey et al.
Application No. 12/467,890
Filed: May 18, 2009
For: REQUEST FOR INFORMATION RELATED TO BROADCAST NETWORK CONTENT

DECISION ON REQUEST TO PARTICIPATE IN PATENT PROSECUTION HIGHWAY PROGRAM AND PETITION TO MAKE SPECIAL UNDER 37 CFR 1.102(d)

MAILED

NOV 22 2010

DIRECTOR OFFICE
TECHNOLOGY CENTER 2400

This is a decision on the request to participate in the PCT- Patent Prosecution Highway (PPH) pilot program and the petition under 37 CFR 1.102(d), filed November 11, 2010, to make the above-identified application special.

The petition is **GRANTED.**

A grantable request to participate in the PCT PPH program and petition to make special require:

(1) The relationship between the corresponding U.S. application for which participation in the PCT-PPH pilot program is requested and the PCT application satisfies one of the following:

(a) The U.S. application is a national stage entry of the corresponding PCT application.

(b)The U.S. application is a national application which forms the basis for the priority claim in the corresponding PCT application.

(c) The U.S. application is a national stage entry of another PCT application (which can be filed in any competent receiving office) which claims priority to the corresponding PCT application.

(d) The U.S. application is a national application claiming foreign/domestic priority to the corresponding PCT application.

(e) The U.S. application is a continuing application (continuation, divisional, or continuation-in-part) of the U.S. application which satisfies one of the above (a) to (d) scenarios.

(2) The latest work product in the international phase of the PCT application corresponding to the U.S. application indicates at least one claim in the PCT application has novelty, inventive step and industrial applicability. In case any observation is described in Box VIII of the WO/ISA, or WO/IPEA, or IPER which forms the basis for the PCT-PPH request, applicant must identify and explain why the claim(s) is/are not subject to any observation described in Box VIII irrespective of whether an amendment is submitted to correct the observation described in Box VIII.

(3) All the claims in each U.S. application for which a request for participation in the PCT-PPH pilot program is made must sufficiently correspond to or be mended to sufficiently correspond to one or more of those claims indicated as having novelty, inventive step and industrial applicability and free of any observation described in Box VIII in the latest work product of the corresponding PCT application.

(4) Substantive examination of the U.S. application for which participation in the PCT-PPH pilot program is requested has not begun.

(5) Applicant must submit a copy of the latest international work product which indicated that the claim(s) has/have novelty, inventive step and industrial applicability along with an English translation thereof if the copy of the latest international work product is not in the English language.

(6) Applicant must submit a copy of the claims from the corresponding PCT application which were indicated as having novelty, inventive step and industrial applicability in the latest work product of the PCT application along with an English translation thereof and a statement that the English translation is accurate if the claims are not in the English language. Applicant is required to submit a claims correspondence table in English. The claims correspondence table must indicate how all the claims in the U.S. application sufficiently correspond to the claims indicated as having novelty, inventive step and industrial applicability in the latest international work product.

(7) Applicant must submit an information disclosure statement (IDS) listing the documents cited in the international work products (ISR, WOIISA, WOIIPEA, PER) of the PCT.

(8) Applicant must submit a petition fee under 37 CFR 1.17(h) for the petition to make special under 37 CFR 1.102(d).

(9) The request for participation in the PCT-PPH pilot program and all the supporting documents must be submitted to the USPTO via EFS-Web and indexed with the following document description: "Petition to make special under PCT-Patent Pros Hwy. Any preliminary amendments and IDS submitted with the PCT-PPH documents must be separately indexed as a preliminary amendment and IDS, respectively.

The request to participate in the PCT-PPH program and petition are found to comply with all the above requirements. Accordingly, the above-identified application has been accorded "special" status.

Telephone inquiries concerning this decision should be directed to Christopher Grant at 571-272-7294

All other inquiries concerning the examination or status of the application is accessible in the PAIR system at http://www.uspto.gov/ebc/index.html.

The application is being forwarded to the examiner for action on the merits commensurate with this decision.

/Christopher Grant/
Christopher Grant
Quality Assurance Specialist
Technology Center 2400

UNITED STATES PATENT AND TRADEMARK OFFICE

UNITED STATES DEPARTMENT OF COMMERCE
United States Patent and Trademark Office
Address: COMMISSIONER FOR PATENTS
P.O. Box 1450
Alexandria, Virginia 22313-1450
www.uspto.gov

APPLICATION NO.	FILING DATE	FIRST NAMED INVENTOR	ATTORNEY DOCKET NO.	CONFIRMATION NO.
12/467,905	05/18/2009	Timothy Brian Cupka	1493-014	8916

32905 7590 09/07/2010
JONDLE & ASSOCIATES P.C.
858 HAPPY CANYON ROAD SUITE 230
CASTLE ROCK, CO 80108

EXAMINER
BUI, PHUONG T

ART UNIT	PAPER NUMBER
1638	

NOTIFICATION DATE	DELIVERY MODE
09/07/2010	ELECTRONIC

Please find below and/or attached an Office communication concerning this application or proceeding.

The time period for reply, if any, is set in the attached communication.

Notice of the Office communication was sent electronically on above-indicated "Notification Date" to the following e-mail address(es):

JondleOA@jondlelaw.com

UNITED STATES PATENT AND TRADEMARK OFFICE

Commissioner for Patents
United States Patent and Trademark Office
P.O. Box 1450
Alexandria, VA 22313-1450
www.uspto.gov

SEP 0 7 2010

JONDLE & ASSOCIATES P.C.
858 HAPPY CANYON ROAD SUITE 230
CASTLE ROCK CO 80108

In re Application of: Timothy Brian Cupka Serial No.: 12/467,905 Filed: May 18, 2009 Attorney Docket No.: **1493-014**	: PETITION DECISION

This is in response to the petition under 37 CFR § 1.59(b), filed August 24, 2010, to expunge information from the above identified application. This application has been allowed.

Petitioner requests that the Reply to Request for Information Under 37 CFR 1.105 submitted to the Patent Office on November 12, 2009 be expunged from the record. Petitioner states either: (A) that the information contains trade secret material, proprietary material and/or material that is subject to a protective order which has not been made public; or (B) that the information submitted was unintentionally submitted and the failure to obtain its return would cause irreparable harm to the party who submitted the information or to the party in interest on whose behalf the information was submitted, and the information has not otherwise been made public. The petition fee set forth in 37 CFR § 1.17(g) has been paid.

The reasons set forth in this petition establishes to the satisfaction of the Director that expungement of the information is appropriate. The file entry for this document has been closed and as such the document is no longer publicly available, which is the IFW equivalent to removal of a paper document from a paper file wrapper.

Therefore, petitioner's petition is GRANTED.

Should there be any questions about this decision please contact Marianne C. Seidel by letter addressed to Director, TC 1600, at the address listed above, or by telephone at 571-272-0584 or by facsimile sent to the general Office facsimile number, 571-273-8300.

Marianne C. Seidel
Quality Assurance Specialist
Technology Center 1600

UNITED STATES PATENT AND TRADEMARK OFFICE

Commissioner for Patents
United States Patent and Trademark Office
P.O. Box 1450
Alexandria, VA 22313-1450
www.uspto.gov

JONDLE & ASSOCIATES, P.C.
858 HAPPY CANYON ROAD, SUITE 230
CASTLE ROCK CO 80108

MAILED
JUN 10 2011
OFFICE OF PETITIONS

In re Patent No. 7,829,770 :
Issue Date: November 9, 2010 :
Application No. 12/467,905 : DECISION ON PETITION
Filed: May 18, 2009 :
Attorney Docket No. 1493-014 :

This is a decision on the Request Under 37 C.F.R. 3.81(b) To Correct Assignment Data and Request For Issuance Of Certificate Of Correction, filed February 7, 2011, which is being treated as a Petition Under 37 CFR §3.81(b), to identify the correct assignees' names. A completed Certificate of Correction Form (PTO/SB/44) was submitted with Petition.

The petition under 37 CFR §3.81(b) is **GRANTED**.

Petitioner requests that the present Petition was submitted to correct the assignees' names on the previously submitted PTOL 85B. Accordingly, petitioner requests, in effect, that the Title Page of the above-identified patent be corrected, via issuance of Certificate of Correction, to correct the assignees' names identified thereon from:

"Limagrain Europe, Verneuil L'etang (FR)"

to:

--Limagrain Europe, Verneuil L'etang (FR);
KWS Kleinwanzlebener Saatzucgt AG, Einbeck (DE) --

37 CFR 3.81(b), effective June 25, 2004, reads:

> *After payment of the issue fee:* Any request for issuance of an application in the name of the assignee submitted after the date of payment of the issue fee, and any request for a patent to be corrected to state the name of the assignee, must state that the assignment was submitted for recordation as set forth in §3.11 before issuance of the patent, and must include a request for a certificate of correction under §1.323 of this chapter (accompanied by the fee set forth in §1.20(a) and the processing fee set forth in §1.17(i) of this chapter.

The requisite $100.00 fee (Fee Code 1811), as set forth under 37 CFR §1.20(a), and the requisite $130.00 processing fee (Fee Code 1464), as set forth under 37 CFR §1.17(i), have been submitted. Further, Office assignment records are consistent with the requested correction. Accordingly, since the Petition complies with the provisions of 37 CFR §3.81(b), it is appropriate for the Office to issue a Certificate of Correction in accordance with the content of the Form (PTO/SB/44) submitted with Petition.

Inquiries related this communication should be directed to the undersigned at (571)272-3213.

Any questions concerning the issuance of a Certificate of Correction should be directed to the Certificates of Correction Branch at (703)756-1814.

This matter is being referred to the Certificates of Correction Branch for processing of a Certificate of Correction in U.S. Patent No. 7,829,770.

Cheryl Gibson-Baylor

Cheryl Gibson-Baylor
Petitions Examiner
Office of Petitions

UNITED STATES PATENT AND TRADEMARK OFFICE

UNITED STATES DEPARTMENT OF COMMERCE
United States Patent and Trademark Office
Address: COMMISSIONER FOR PATENTS
P.O. Box 1450
Alexandria, Virginia 22313-1450
www.uspto.gov

APPLICATION NO.	FILING DATE	FIRST NAMED INVENTOR	ATTORNEY DOCKET NO.	CONFIRMATION NO.
12/467,915	05/18/2009	Takahiro Sugai	NGTOSH.051AUS	8935

20995 7590 10/19/2010
KNOBBE MARTENS OLSON & BEAR LLP
2040 MAIN STREET
FOURTEENTH FLOOR
IRVINE, CA 92614

EXAMINER
DINH, TUAN T

ART UNIT	PAPER NUMBER
2835	

NOTIFICATION DATE	DELIVERY MODE
10/19/2010	ELECTRONIC

Please find below and/or attached an Office communication concerning this application or proceeding.

The time period for reply, if any, is set in the attached communication.

Notice of the Office communication was sent electronically on above-indicated "Notification Date" to the following e-mail address(es):

jcartee@kmob.com
efiling@kmob.com
eOAPilot@kmob.com

UNITED STATES PATENT AND TRADEMARK OFFICE

Commissioner for Patents
United States Patent and Trademark Office
P.O. Box 1450
Alexandria, VA 22313-1450
www.uspto.gov

KNOBBE MARTENS OLSON & BEAR LLP
2040 MAIN STREET
FOURTEENTH FLOOR
IRVINE CA 92614

In re Application of	**: DECISION ON REQUEST TO**
Takahiro SUGAI	**: PARTICIPATE IN THE PATENT**
Application No.: 12/467,915	**: PROSECUTION HIGHWAY**
Filed: 18 May 2009	**: PROGRAM AND PETITION**
Attorney Docket No.: NGTOSH.051AUS	**: TO MAKE SPECIAL UNDER**
For: PRINTED CIRCUIT BOARD AND ELECTRONIC APPARATUS HAVING PRINTED CIRCUIT BOARD	**: 37 CFR 1.102(d)**

This is a decision on the request to participate in the Patent Prosecution Highway (PPH) program and the petition under 37 CFR 1.102(a), filed 26 August 2010, to make the above-identified application special.

The request and petition are **GRANTED**.

Discussion

A grantable request to participate in the PPH pilot program and petition to make special require:

1. The U.S. application is

    a. a Paris Convention application which either
        i. validly claims priority under 35 U.S.C. 119(a) and 37 CFR 1.55 to one or more applications filed in the JPO, or
        ii. validly claims priority to a PCT application that contains no priority claims, or
    b. a national stage application under the PCT (an application which entered the national stage in the U.S. from a PCT international application after compliance with 35 U.S.C. 371), which PCT application
        i. validly claims priority to an application filed in the JPO, or
        ii. validly claims priority to a PCT application that contains no priority claims, or
        iii. contains no priority claim, or
    c. a so-called bypass application filed under 35 U.S.C. 111(a) which validly claims benefit under 35 U.S.C. 120 to a PCT application, which PCT application
        i. validly claims priority to an application filed in the JPO, or

ii. validly claims priority to a PCT application that contains no priority claims, or
iii. contains no priority claim;

2. Applicant must submit a copy of:
   a. The allowable/patentable claim(s) from the JPO application(s);
   b. An English translation of the allowable/patentable claim(s) and
   c. A statement that the English translation is accurate;
3. Applicant must:
   a. Ensure all the claims in the U.S. application must sufficiently correspond or be amended to sufficiently correspond to the allowable/patentable claim(s) in the JPO application(s) and
   b. Submit a claims correspondence table in English;
4. Examination of the U.S. application has not begun;
5. Applicant must submit:
   a. Documentation of prior office action:
      i. a copy of the office action(s) just prior to the "Decision to Grant a Patent" from each of the JPO application(s) containing the allowable/patentable claim(s) or
      ii. if the allowable/patentable claims(s) are from a "Notification of Reasons for Refusal" then the Notification of Reasons for Refusal or
      iii. if the JPO application is a first action allowance then no office action from the JPO is necessary should be indicated on the request/petition form;
   b. An English language translation of the JPO Office action from (5)(a)(i)-(ii) above
   c. A statement that the English translation is accurate;
6. Applicant must submit:
   a. An IDS listing the documents cited by the JPO examiner in the JPO office action (unless already submitted in this application)
   b. Copies of the documents except U.S. patents or U.S. patent application publications (unless already submitted in this application);

The request to participate in the PPH pilot program and petition comply with the above requirements. Accordingly, the above-identified application has been accorded "special" status.

Inquiries concerning this decision should be directed to Lee W. Young at 571-272-4549.

All other inquiries concerning the examination or status of the application is accessible in the PAIR system at http://www.uspto.gov/ebc.index.html.

This application will be forwarded to the examiner for action on the merits commensurate with this decision.

Lee W. Young
TQAS
Technology Center 2800

UNITED STATES PATENT AND TRADEMARK OFFICE

Commissioner for Patents
United States Patent and Trademark Office
P.O. Box 1450
Alexandria, VA 22313-1450
www.uspto.gov

FISH & RICHARDSON P.C. (NY)
P.O. BOX 1022
MINNEAPOLIS, MN 55440-1022

MAILED
DEC 15 2010
OFFICE OF PETITIONS

In re Application of :
Keith Hopwood, et al. :
Application No.: 12/467,926 : ON PETITION
Filed: May 18, 2009 :
Attorney Docket No.: 19012-0011001 :

This is a decision on the petition, filed December 14, 2010, under 37 CFR 1.313(c)(2) to withdraw the above-identified application from issue after payment of the issue fee.

The petition is **GRANTED**.

The above-identified application is withdrawn from issue for consideration of a submission under 37 CFR 1.114 (request for continued examination). See 37 CFR 1.313(c)(2).

Petitioner is advised that the issue fee paid on November 26, 2010, cannot be refunded. If, however, this application is again allowed, petitioner may request that it be applied towards the issue fee required by the new Notice of Allowance.[1]

Telephone inquiries relating to this decision should be directed to the undersigned at (571) 272-3204.

The application is being referred to Technology Center AU 2833 for further processing of the request for continued examination under 37 CFR 1.114 and for consideration of the concurrently filed Information Disclosure Statement (IDS).

/SDB/

Sherry D. Brinkley
Petitions Examiner
Office of Petitions

[1] *The request to apply the issue fee to the new Notice may be satisfied by completing and returning the new Part B – Fee(s) Transmittal Form (along with any balance due at the time of submission). Petitioner is advised that the Issue Fee Transmittal Form must be completed and timely submitted to avoid abandonment of the application.*

UNITED STATES PATENT AND TRADEMARK OFFICE

Commissioner for Patents
United States Patent and Trademark Office
P.O. Box 1450
Alexandria, VA 22313-1450
www.uspto.gov

Caven & Aghevli LLC
c/o CPA Global
P.O. BOX 52050
MINNEAPOLIS MN 55402

MAILED
JAN 17 2012
OFFICE OF PETITIONS

In re Application of	:	DECISION ON PETITION
Robert Grow	:	UNDER 37 CFR 1.78(a)(3)
Application No. 12/467,951	:	
Filed: May 18, 2009	:	
Attorney Docket No. P8850C2	:	
	:	

This is a decision on the PETITION TO CORRECT CLAIM OF PRIORITY UNDER 37 C.F.R. § 1.78(A)(3) filed January 9, 2012, to accept an unintentionally delayed claim to prior-filed application nos. 10/648,743 and 09/540,925.

The petition is **GRANTED**.

A petition for acceptance of a claim for late priority under 37 CFR § 1.78(a)(3) is only applicable to those applications filed on or after November 29, 2000. Further, the petition is appropriate only after the expiration of the period specified in 37 CFR § 1.78(a)(2)(ii), and must be filed during the pendency of the nonprovisional application. In addition, the petition under 37 CFR § 1.78(a)(3) must be accompanied by:

(1) the reference required by 35 U.S.C. § 120 and 37 CFR § 1.78(a)(2)(i) of the prior-filed application, unless previously submitted;
(2) the surcharge set forth in § 1.17(t); and
(3) a statement that the entire delay between the date the claim was due under 37 CFR §§ 1.78(a)(2)(ii), and the date the claim was filed was unintentional. The Director may require additional where there is a question whether the delay was unintentional.

The instant application was filed after November 29, 2000. A review of the application as filed reveals that the claim for priority set forth on petition was not submitted on filing in

the first sentence of the specification or in an application data sheet. Rather, applicant stated that this application relates to and states priority from application No. 10/648,743, which is a continuation of application No. 09/540,925 (both of which were incorporated by reference). The four and sixteen-month periods specified in 37 CFR §§ 1.78(a)(2)(ii) expired without a proper §120 claim being made to application No. 10/648,743. As such, the entire chain was not proper. Thus, the instant petition is appropriate. In addition, the petition includes the required statement of unintentional delay and the required surcharge.

On petition, a reference to the prior-filed nonprovisional applications has been included in an amendment, as required by 37 CFR 1.78(a)(2)(iii).

With respect to 35 U.S.C. 120 and 37 CFR 1.78(a)(3), the amendment includes a reference to prior-filed application No. 10/648,743, with the relationship stated as a continuation, and the relationship of application No. 09/540,925 stated as a continuation of application No. 10/648,743.

The claim for priority of application No. 09/540,925 was properly made in intermediate application No. 10/648,743.

All of the above requirements having been satisfied, the late claim for benefit of priority to the prior-filed applications under 35 U.S.C. § 120 is accepted as being unintentionally delayed.

The granting of the petition to accept the delayed benefit claim to the prior-filed applications under 37 CFR § 1.78(a)(3) should not be construed as meaning that this application is entitled to the benefit of the filing date of the prior-filed application. In order for this application to be entitled to the benefit of the prior-filed application, all other requirements under 35 U.S.C. §§120 and 1.78(a)(1) and (a)(2) must be met. Similarly, the fact that the corrected Filing Receipt accompanying this decision on petition includes the prior-filed application should not be construed as meaning that applicant is entitled to the claim for benefit of priority to the prior-filed application noted thereon. Accordingly, the examiner will, in due course, consider this benefit claim and determine whether the application is entitled to the benefit of the earlier filing date.

A corrected Filing Receipt, which includes the priority claim to the prior-filed application, accompanies this decision on petition.

Any questions concerning this matter may be directed to the undersigned at (571) 272-3219. All other inquiries concerning either the examination procedures or status of the application should be directed to the Technology Center.

This application is being referred to Technology Center Art Unit 2456 for consideration by the examiner of the claim for benefit of priority under 35 U.S.C. §120 of the prior-filed applications as set forth in the amendment filed January 9, 2012.

Nancy Johnson
Senior Petitions Attorney
Office of Petitions

ATTACHMENT: Corrected Filing Receipt

UNITED STATES PATENT AND TRADEMARK OFFICE

UNITED STATES DEPARTMENT OF COMMERCE
United States Patent and Trademark Office
Address: COMMISSIONER FOR PATENTS
P.O. Box 1450
Alexandria, Virginia 22313-1450
www.uspto.gov

APPLICATION NUMBER	FILING or 371(c) DATE	GRP ART UNIT	FIL FEE REC'D	ATTY.DOCKET.NO	TOT CLAIMS	IND CLAIMS
12/467,951	05/18/2009	2456	1220	P8850C2	1	1

CONFIRMATION NO. 9016

CORRECTED FILING RECEIPT

50890
Caven & Aghevli LLC
c/o CPA Global
P.O. BOX 52050
MINNEAPOLIS, MN 55402

OC000000052035954

Date Mailed: 01/17/2012

Receipt is acknowledged of this non-provisional patent application. The application will be taken up for examination in due course. Applicant will be notified as to the results of the examination. Any correspondence concerning the application must include the following identification information: the U.S. APPLICATION NUMBER, FILING DATE, NAME OF APPLICANT, and TITLE OF INVENTION. Fees transmitted by check or draft are subject to collection. Please verify the accuracy of the data presented on this receipt. **If an error is noted on this Filing Receipt, please submit a written request for a Filing Receipt Correction. Please provide a copy of this Filing Receipt with the changes noted thereon. If you received a "Notice to File Missing Parts" for this application, please submit any corrections to this Filing Receipt with your reply to the Notice. When the USPTO processes the reply to the Notice, the USPTO will generate another Filing Receipt incorporating the requested corrections**

Applicant(s)

Robert M. Grow, Poway, CA;

Power of Attorney: The patent practitioners associated with Customer Number 50890

Domestic Priority data as claimed by applicant

This application is a CON of 10/648,743 08/26/2003 PAT 7535928
which is a CON of 09/540,925 03/31/2000 PAT 6629147

Foreign Applications (You may be eligible to benefit from the **Patent Prosecution Highway** program at the USPTO. Please see http://www.uspto.gov for more information.)

If Required, Foreign Filing License Granted: 05/26/2009

The country code and number of your priority application, to be used for filing abroad under the Paris Convention, is **US 12/467,951**

Projected Publication Date: Not Applicable

Non-Publication Request: No

Early Publication Request: No

Title

SEGMENTATION AND REASSEMBLY OF DATA FRAMES

Preliminary Class

709

PROTECTING YOUR INVENTION OUTSIDE THE UNITED STATES

Since the rights granted by a U.S. patent extend only throughout the territory of the United States and have no effect in a foreign country, an inventor who wishes patent protection in another country must apply for a patent in a specific country or in regional patent offices. Applicants may wish to consider the filing of an international application under the Patent Cooperation Treaty (PCT). An international (PCT) application generally has the same effect as a regular national patent application in each PCT-member country. The PCT process **simplifies** the filing of patent applications on the same invention in member countries, but **does not result** in a grant of "an international patent" and does not eliminate the need of applicants to file additional documents and fees in countries where patent protection is desired.

Almost every country has its own patent law, and a person desiring a patent in a particular country must make an application for patent in that country in accordance with its particular laws. Since the laws of many countries differ in various respects from the patent law of the United States, applicants are advised to seek guidance from specific foreign countries to ensure that patent rights are not lost prematurely.

Applicants also are advised that in the case of inventions made in the United States, the Director of the USPTO must issue a license before applicants can apply for a patent in a foreign country. The filing of a U.S. patent application serves as a request for a foreign filing license. The application's filing receipt contains further information and guidance as to the status of applicant's license for foreign filing.

Applicants may wish to consult the USPTO booklet, "General Information Concerning Patents" (specifically, the section entitled "Treaties and Foreign Patents") for more information on timeframes and deadlines for filing foreign patent applications. The guide is available either by contacting the USPTO Contact Center at 800-786-9199, or it can be viewed on the USPTO website at http://www.uspto.gov/web/offices/pac/doc/general/index.html.

For information on preventing theft of your intellectual property (patents, trademarks and copyrights), you may wish to consult the U.S. Government website, http://www.stopfakes.gov. Part of a Department of Commerce initiative, this website includes self-help "toolkits" giving innovators guidance on how to protect intellectual property in specific countries such as China, Korea and Mexico. For questions regarding patent enforcement issues, applicants may call the U.S. Government hotline at 1-866-999-HALT (1-866-999-4158).

LICENSE FOR FOREIGN FILING UNDER

Title 35, United States Code, Section 184

Title 37, Code of Federal Regulations, 5.11 & 5.15

GRANTED

The applicant has been granted a license under 35 U.S.C. 184, if the phrase "IF REQUIRED, FOREIGN FILING LICENSE GRANTED" followed by a date appears on this form. Such licenses are issued in all applications where the conditions for issuance of a license have been met, regardless of whether or not a license may be required as

set forth in 37 CFR 5.15. The scope and limitations of this license are set forth in 37 CFR 5.15(a) unless an earlier license has been issued under 37 CFR 5.15(b). The license is subject to revocation upon written notification. The date indicated is the effective date of the license, unless an earlier license of similar scope has been granted under 37 CFR 5.13 or 5.14.

This license is to be retained by the licensee and may be used at any time on or after the effective date thereof unless it is revoked. This license is automatically transferred to any related applications(s) filed under 37 CFR 1.53(d). This license is not retroactive.

The grant of a license does not in any way lessen the responsibility of a licensee for the security of the subject matter as imposed by any Government contract or the provisions of existing laws relating to espionage and the national security or the export of technical data. Licensees should apprise themselves of current regulations especially with respect to certain countries, of other agencies, particularly the Office of Defense Trade Controls, Department of State (with respect to Arms, Munitions and Implements of War (22 CFR 121-128)); the Bureau of Industry and Security, Department of Commerce (15 CFR parts 730-774); the Office of Foreign AssetsControl, Department of Treasury (31 CFR Parts 500+) and the Department of Energy.

NOT GRANTED

No license under 35 U.S.C. 184 has been granted at this time, if the phrase "IF REQUIRED, FOREIGN FILING LICENSE GRANTED" DOES NOT appear on this form. Applicant may still petition for a license under 37 CFR 5.12, if a license is desired before the expiration of 6 months from the filing date of the application. If 6 months has lapsed from the filing date of this application and the licensee has not received any indication of a secrecy order under 35 U.S.C. 181, the licensee may foreign file the application pursuant to 37 CFR 5.15(b).

SelectUSA

The United States represents the largest, most dynamic marketplace in the world and is an unparalleled location for business investment, innovation and commercialization of new technologies. The USA offers tremendous resources and advantages for those who invest and manufacture goods here. Through SelectUSA, our nation works to encourage, facilitate, and accelerate business investment. To learn more about why the USA is the best country in the world to develop technology, manufacture products, and grow your business, visit SelectUSA.gov.

Doc Code: PET.GREEN
Document Description: Petition for Green Tech Pilot

PTO/SB/420 (11-10)
Approved for use through 01/31/2011. OMB 0651-0062
U.S. Patent and Trademark Office; U. S. DEPARTMENT OF COMMERCE
Under the Paperwork Reduction Act of 1995, no persons are required to respond to a collection of information unless it displays a valid OMB control number.

PETITION TO MAKE SPECIAL UNDER THE GREEN TECHNOLOGY PILOT PROGRAM

Attorney Docket Number: PWRGP037	Application Number (if known): 12/467,993	Filing date: May 18, 2009
First Named Inventor: Jeffrey Phillips, et al.		
Title: PASTED ZINC ELECTRODE FOR RECHARGEABLE NICKEL-ZINC BATTERIES		

APPLICANT HEREBY REQUESTS TO PARTICIPATE IN THE GREEN TECHNOLOGY PILOT PROGRAM FOR THE ABOVE-IDENTIFIED APPLICATION. See Instruction Sheet on page 2.

This petition must be timely filed electronically using the USPTO electronic filing system, EFS-Web.

1. By filing this petition:

   Applicant is requesting early publication: Applicant hereby requests early publication under 37 CFR 1.219 and the publication fee set forth in 37 CFR 1.18(d) accompanies this request.

2. By filing this petition: applicant is agreeing to make an election without traverse in a telephonic interview and elect an invention that meets the eligibility requirements for the Green Technology Pilot Program, if the Office determines that the claims are not obviously directed to a single invention. See Instruction Sheet.

3. This request is accompanied by statements of special status for the eligibility requirement.

4. The application contains no more than three (3) independent claims and twenty (20) total claims.

5. The application does not contain any multiple dependent claims.

6. Other attachments: Preliminary Amendment

Signature	Date January 27, 2011
Name (Print/Typed) Brian D. Griedel	Registration Number 48,425

Note: *Signatures of all the inventors or assignees of record of the entire interest or their representative(s) are required in accordance with 37 CFR 1.33 and 11.18. Please see 37 CFR 1.4(d) for the form of the signature. If necessary, submit multiple forms for more than one signature see below*.*

☐ *Total of ..... forms are submitted.

The information is required to obtain or retain a benefit by the public which is to file (and by the USPTO to process) an application. Confidentiality is governed by 35 U.S.C. 122 and 37 CFR 1.11 and 1.14. This collection is estimated to take 12 hours to complete, including gathering, preparing, and submitting the completed application form to the USPTO. Time will vary depending upon the individual case. Any comments on the amount of time you require to complete this form and/or suggestions for reducing this burden, should be sent to the Chief Information Officer, U.S. Patent and Trademark Office, U.S. Department of Commerce, P.O. Box 1450, Alexandria, VA 22313-1450. DO NOT SEND FEES OR COMPLETED FORMS TO THIS ADDRESS. **SEND TO: Commissioner for Patents, P.O. Box 1450, Alexandria, VA 22313-1450.**

If you need assistance in completing the form, call 1-800-PTO-9199 and select option 2.

IN THE UNITED STATES PATENT AND TRADEMARK OFFICE

In re application of: Jeffrey Phillips, et al.

Docket No.: PWRGP037

Application No.: 12/467,993

Examiner: *to be assigned*

Filed: May 18, 2009

Art Unit: 1795

Title: PASTED ZINC ELECTRODE FOR RECHARGEABLE NICKEL-ZINC BATTERIES

Confirmation No.: 9094

CERTIFICATE OF EFS-WEB TRANSMISSION
I hereby certify that this correspondence is being transmitted electronically through EFS-WEB to the Commissioner for Patents, P.O. Box 1450 Alexandria, VA 22313-1450 on January 27, 2011.

Signed: _____/Kelly Simpson/_____
Kelly Simpson

STATEMENT OF SPECIAL STATUS FOR ELIGIBILITY REQUIREMENT FOR GREEN TECHNOLOGY PILOT PROGRAM (74 Fed. Reg. 64666)

Commissioner for Patents
P.O. Box 1450
Alexandria, VA 22313-1450

Dear Sir/Madam:

This statement accompanies a Petition to Make Special Under the Green Technology Pilot Program (74 Fed. Reg. 64666). The subject patent application meets the following conditions of eligibility:

Basis for Special Status and Statement Pertaining to Materiality Standard

1. The claims of the subject patent application are directed to a single invention that materially contributes to renewable energy resources, energy use and conservation as well as greenhouse gas emission reduction. The invention is directed to rechargeable nickel-zinc battery technology developed as energy storage devices that deliver exceptionally high power in a safe, low cost, lightweight and reusable package.

2. The invention materially contributes to renewable energy resources, energy use and conservation because their high power output allows more efficient energy utilization and their rechargeability allows conservation of energy resources. With respect to energy conservation, the technology is particularly well suited for grid storage applications where the low cost per Watt and high round trip energy efficiency are highly valued.

3. The invention materially contributes to greenhouse gas emission reduction because the economics and high power delivery of the battery technology make it one of the most attractive candidates for inclusion in both full and micro (stop-start) hybrid electric vehicles. Testing has already demonstrated its ability to meet automotive specifications in both applications.

4. If the USPTO determines that the claims are directed to multiple inventions, Applicants agree to make an election without traverse in a telephonic interview, and to elect an invention that meets the eligibility requirements of the Green Technology Pilot Program.

5. The subject patent application is a non-reissue, non-reexamination, non-provisional utility application filed under 35 USC §111(a).

I declare that all statements made herein of my own knowledge are true; that all statements made on the information and behalf are believed to be true and further that these statements made with the knowledge that willful false statements are punishable by fine or imprisonment, or both under section 1001 of Title 18 of the United States Code, and that such willful false statements may jeopardize the validity of the application or any patent issuing thereon.

Respectfully submitted,
WEAVER AUSTIN VILLENEUVE & SAMPSON LLP

/Brian D. Griedel/
Brian D. Griedel
Reg. No. 48,425

P.O. Box 70250
Oakland, CA 94612-0250
(510) 663-1100

UNITED STATES PATENT AND TRADEMARK OFFICE

UNITED STATES DEPARTMENT OF COMMERCE
United States Patent and Trademark Office
Address: COMMISSIONER FOR PATENTS
P.O. Box 1450
Alexandria, Virginia 22313-1450
www.uspto.gov

APPLICATION NO.	FILING DATE	FIRST NAMED INVENTOR	ATTORNEY DOCKET NO.	CONFIRMATION NO.
12/467,993	05/18/2009	Jeffrey Phillips	PWRGP037	9094

22434 7590 02/07/2011
Weaver Austin Villeneuve & Sampson LLP
P.O. BOX 70250
OAKLAND, CA 94612-0250

EXAMINER
WILLS, MONIQUE M

ART UNIT	PAPER NUMBER
1728	

NOTIFICATION DATE	DELIVERY MODE
02/07/2011	ELECTRONIC

Please find below and/or attached an Office communication concerning this application or proceeding.

The time period for reply, if any, is set in the attached communication.

Notice of the Office communication was sent electronically on above-indicated "Notification Date" to the following e-mail address(es):

USPTO@wavsip.com

UNITED STATES PATENT AND TRADEMARK OFFICE

Commissioner for Patents
United States Patent and Trademark Office
P.O. Box 1450
Alexandria, VA 22313-1450
www.uspto.gov

2/7/2011

Weaver Austin Villeneuve & Sampson LLP
P.O. BOX 70250
OAKLAND CA 94612-0250

In re Application of	:	
Jeffrey Phillips et al.	:	DECISION ON PETITION
Application No. 12/467,993	:	TO MAKE SPECIAL UNDER
Filed: May 18, 2009	:	THE GREEN TECHNOLOGY
Attorney Docket No. PWRGP037	:	PILOT PROGRAM

This is a decision on the petition under 37 CFR 1.102, filed January 27, 2011, to make the above-identified application special under the pilot program for applications pertaining to Green Technologies as set forth in 74 Federal Register Notice 64666 (December 8, 2009) and amended by 75 Federal Register Notice 28554 (May 21, 2010) and 75 Federal Register Notice 69049 (November 10, 2010).

The petition is **GRANTED**.

A grantable petition to make an application special under 37 CFR 1.102 and the pilot program as set forth in 74 FR 64666 must be directed to a nonprovisional application filed under 35 USC 111(a) or be a national stage entry under 35 USC 371, exclusive of any reissue applications.

In order to qualify for special status, the following requirements must be met. 1) The application must have no more than 3 independent claims and no more than 20 total claims. 2) The application must not contain any multiple dependent claims. 3) The petition must state the basis for seeking special status, i.e., the claimed invention either: A) materially enhances the quality of the environment or B) materially contributes to: i) the discovery or development of renewable energy resources, ii) the more efficient utilization and conservation of energy resources, or iii) greenhouse gas emission reduction. 4) If the disclosure is not clear on its face that the claimed invention materially contributes under category (A) or (B), the petition must be accompanied by a statement by the applicant, assignee, or an attorney/agent registered to practice before the Office explaining how the materiality standard is met. 5) A statement that applicant will agree to make an election without traverse in a telephonic interview if a restriction requirement is made by the examiner. 6) The petition to make special must be filed electronically. 7) The petition must be filed at least one day prior to the date that a first Office Action appears in the Patent Application Information Retrieval (PAIR) system. 8) The petition must be accompanied by a request for early publication in compliance with 37 CFR 1.219 and include the publication fee as set forth in 37 CFR 1.18(d).

The requirement for a fee for consideration of the petition to make special for applications pertaining to Green Technologies has been waived.

The instant petition complies with items 1 – 8 above. Accordingly, the above-identified application has been accorded "special" status.

Telephone inquires concerning this decision should be directed to Blaine Copenheaver at 571-272-1156.

The application is being forwarded to the examiner for action on the merits commensurate with this decision.

/Blaine Copenheaver/

Blaine Copenheaver
Quality Assurance Specialist
Technology Center 1700

UNITED STATES PATENT AND TRADEMARK OFFICE

UNITED STATES DEPARTMENT OF COMMERCE
United States Patent and Trademark Office
Address: COMMISSIONER FOR PATENTS
P.O. Box 1450
Alexandria, Virginia 22313-1450
www.uspto.gov

APPLICATION NO.	FILING DATE	FIRST NAMED INVENTOR	ATTORNEY DOCKET NO.	CONFIRMATION NO.
12/468,056	05/19/2009	Shoji HOKIHIRA	P7S2009151US	9238

7590 12/01/2010
ONDA TECHNO INTL. PATENT ATTYS.
12-1, OMIYA-CHO 2-CHOME
GIFU-CITY, 500-8731
JAPAN

EXAMINER
ABEL JALIL, NEVEEN

ART UNIT	PAPER NUMBER
2165	

NOTIFICATION DATE	DELIVERY MODE
12/01/2010	ELECTRONIC

DECISION GRANTING PETITION UNDER 37 CFR 1.138(d)

The declaration of express abandonment is recognized

This is in response to the petition under 37 CFR 1.138(d), requesting for a refund of any previously paid search fee and excess claims fee in the above-identified application.

The petition is granted.

The express abandonment is recognized. Any previously paid search fee and excess claims fee are hereby refunded.

Telephone inquiries should be directed to the Office of Data Management at (571) 272-4200.

Mimi Farmer

Patent Publication Branch
Office of Data Management

FORM PET651G (Rev. 08/07)

PATENT COOPERATION TREATY

From the INTERNATIONAL SEARCHING AUTHORITY

To:

MICROSOFT CORPORATION

Attn - Virginia Coggan (vcoggan) LCA - International Patents
One Microsoft Way - 8/1188 Redmond Washington 98052-6399 USA

PCT

NOTIFICATION OF TRANSMITTAL OF THE INTERNATIONAL SEARCH REPORT AND THE WRITTEN OPINION OF THE INTERNATIONAL SEARCHING AUTHORITY, OR THE DECLARATION

(PCT Rule 44.1)

Date of mailing *(day/month/year)* 01 DECEMBER 2010 (01.12.2010)

Applicant's or agent's file reference
326682-02

FOR FURTHER ACTION See paragraphs 1 and 4 below

International application No.
PCT/US2010/034617

International filing date *(day/month/year)*
12 MAY 2010 (12.05.2010)

Applicant

MICROSOFT CORPORATION

1. ☒ The applicant is hereby notified that the international search report and the written opinion of the International Searching Authority have been established and are transmitted herewith.

Filing of amendments and statement under Article 19:

The applicant is entitled, if he so wishes, to amend the claims of the international application (see Rule 46):

When? The time limit for filing such amendments is normally two months from the date of transmittal of the international search report.

Where? Directly to the International Bureau of WIPO, 34 chemin des Colombettes 1211 Geneva 20, Switzerland, Facsimile No.: +41 22 338 82 70

For more detailed instructions, see *PCT Applicant's Guide*, International Phase, paragraphs 9.004 . 9.011.

2. ☐ The applicant is hereby notified that no international search report will be established and that the declaration under Article 17(2)(a) to that effect and the written opinion of the International Searching Authority are transmitted herewith.

3. ☐ **With regard to any protest** against payment of (an) additional fee(s) under Rule 40.2, the applicant is notified that:

☐ the protest together with the decision thereon has been transmitted to the International Bureau together with any request to forward the texts of both the protest and the decision thereon to the designated Offices.

☐ no decision has been made yet on the protest; the applicant will be notified as soon as a decision is made.

4. **Reminders**

The applicant may submit comments on an informal basis on the written opinion of the International Searching Authority to the International Bureau. The International Bureau will send a copy of such comments to all designated Offices unless an international preliminary examination report has been or is to be established. Following the expiration of 30 months from the priority date, these comments will also be made available to the public.

Shortly after the expiration of **18 months** from the priority date, the international application will be published by the International Bureau. If the applicant wishes to avoid or postpone publication, a notice of withdrawal of the international application, or of the priority claim, must reach the International Bureau before the completion of the technical preparations for international publication (Rules 90bis.1 and 90bis.3).

Within **19 months** from the priority date, but only in respect of some designated Offices, a demand for international preliminary examination must be filed if the applicant wishes to postpone the entry into the national phase **until 30 months** from the priority date (in some Offices even later); otherwise, the applicant must, **within 20 months** from the priority date, perform the prescribed acts for entry into the national phase before those designated Offices.

In respect of other designated Offices, the time limit of **30 months** (or later) will apply even if no demand is filed within 19months.

For details about the applicable time limits, Office by Office, see www.wipo.int/pct/en/texts/time_limits.html and the PCT Applicant's Guide, National Chapters.

Name and mailing address of the ISA/KR

Korean Intellectual Property Office
Government Complex-Daejeon, 139 Seonsa-ro, Seo-gu, Daejeon 302-701, Republic of Korea

Facsimile No. 82-42-472-7140

Authorized officer

COMMISSIONER

Telephone No. 82-42-481-8752

* Attention

Copies of the documents cited in the international search report can be searched in the following Korean Intellectual Property Office English website for three months from the date of mailing of the international search report.

http://www.kipo.go.kr/en/ => PCT Services => PCT Services

ID : PCT international application number
PW : **12O6LAE8**

Inquiries related to PCT International Search Report or Written Opinion prepared by KIPO as an International Searching Authority can be answered not only by KIPO but also through IPKC (Intellectual Property Korea Center), located in Vienna, VA, which functions as a PCT Help Desk for PCT applicants.

Homepage: http://www.ipkcenter.com
Email: ipkc@ipkcenter.com
Phone: +1 703 388 1066
Fax: +1 703 388 1084

PATENT COOPERATION TREATY

PCT

INTERNATIONAL SEARCH REPORT

(PCT Article 18 and Rules 43 and 44)

Applicant's or agent's file reference 326682-02	FOR FURTHER ACTION	see Form PCT/ISA/220 as well as, where applicable, item 5 below.
International application No. PCT/US2010/034617	International filing date *(day/month/year)* 12 MAY 2010 (12.05.2010)	(Earliest) Priority Date *(day/month/year)* 19 MAY 2009 (19.05.2009)

Applicant

MICROSOFT CORPORATION

This International search report has been prepared by this International Searching Authority and is transmitted to the applicant according to Article 18. A copy is being transmitted to the International Bureau.

This international search report consists of a total of 3 sheets.

☐ It is also accompanied by a copy of each prior art document cited in this report.

1. **Basis of the report**
   a. With regard to the **language**, the international search was carried out on the basis of:
      ☒ the international application in the language in which it was filed
      ☐ a translation of the international application into _____, which is the language of a translation furnished for the purposes of international search (Rules 12.3(a) and 23.1(b))
   b. ☐ This international search report has been established taking into account the **rectification of an obvious mistake** authorized by or notified to this Authority under Rule 91 (Rule 43.6*bis*(a)).
   c. ☐ With regard to any **nucleotide and/or amino acid sequence** disclosed in the international application, see Box No. I.
2. ☐ **Certain claims were found unsearchable** (See Box No. II)
3. ☐ **Unity of invention is lacking** (See Box No. III)
4. With regard to the **title**,
   ☒ the text is approved as submitted by the applicant.
   ☐ the text has been established by this Authority to read as follows:
5. With regard to the **abstract**,
   ☒ the text is approved as submitted by the applicant.
   ☐ the text has been established, according to Rule 38.2, by this Authority as it appears in Box No. IV. The applicant may, within one month from the date of mailing of this international search report, submit comments to this Authority.
6. With regard to the drawings,
   a. the figure of the **drawings** to be published with the abstract is Figure No. 1
      ☒ as suggested by the applicant.
      ☐ as selected by this Authority, because the applicant failed to suggest a figure.
      ☐ as selected by this Authority, because this figure better characterizes the invention.
   b. ☐ none of the figure is to be published with the abstract.

INTERNATIONAL SEARCH REPORT

International application No.
PCT/US2010/034617

A. CLASSIFICATION OF SUBJECT MATTER

G06F 17/00(2006.01)i, G06F 17/30(2006.01)i

According to International Patent Classification (IPC) or to both national classification and IPC

B. FIELDS SEARCHED

Minimum documentation searched (classification system followed by classification symbols)

G06F 17/00; G06F 15/16; G06F 17/30; G06F 9/00

Documentation searched other than minimum documentation to the extent that such documents are included in the fields searched

Korean utility models and applications for utility models
Japanese utility models and applications for utility models

Electronic data base consulted during the international search (name of data base and, where practicable, search terms used)

eKOMPASS(KIPO internal) & Keywords: , ,

C. DOCUMENTS CONSIDERED TO BE RELEVANT

Category*	Citation of document, with indication, where appropriate, of the relevant passages	Relevant to claim No
A	US 2005-0246717 A1 (JOHN POOLE et al.) 03 November 2005 See paragraph 46 - paragraph 61; paragraph 68 - paragraph 73; paragraph 86 - paragraph 132; and figures 2-6B.	1-15
A	US 2007-0174291 A1 (MICHAEL S. COOPER et al.) 26 July 2007 See paragraph 66 - paragraph 88; and figures 3-4.	1-15
A	US 2004-0249801 A1 (KAPUR SHYAM) 09 December 2004 See paragraph 22 - paragraph 27; paragraph 32 - paragraph 35; and figures 2-4.	1-15
A	US 2005-0198307 A1 (DAVID ZOLLER et al.) 08 September 2005 See paragraph 30 - paragraph 33; and figure 2.	1-15

☐ Further documents are listed in the continuation of Box C.

☒ See patent family annex.

* Special categories of cited documents:
"A" document defining the general state of the art which is not considered to be of particular relevance
"E" earlier application or patent but published on or after the international filing date
"L" document which may throw doubts on priority claim(s) or which is cited to establish the publication date of citation or other special reason (as specified)
"O" document referring to an oral disclosure, use, exhibition or other means
"P" document published prior to the international filing date but later than the priority date claimed
"T" later document published after the international filing date or priority date and not in conflict with the application but cited to understand the principle or theory underlying the invention
"X" document of particular relevance; the claimed invention cannot be considered novel or cannot be considered to involve an inventive step when the document is taken alone
"Y" document of particular relevance; the claimed invention cannot be considered to involve an inventive step when the document is combined with one or more other such documents,such combination being obvious to a person skilled in the art
"&" document member of the same patent family

Date of the actual completion of the international search	Date of mailing of the international search report
30 NOVEMBER 2010 (30.11.2010)	**01 DECEMBER 2010 (01.12.2010)**
Name and mailing address of the ISA/KR Korean Intellectual Property Office Government Complex-Daejeon, 139 Seonsa-ro, Seo-gu, Daejeon 302-701, Republic of Korea Facsimile No. 82-42-472-7140	Authorized officer PARK, SANG HYUN Telephone No. 82-42-481-8263

INTERNATIONAL SEARCH REPORT

Information on patent family members

International application No.
PCT/US2010/034617

Patent document cited in search report	Publication date	Patent family member(s)	Publication date
US 2005-0246717 A1	03.11.2005	US 7448047 B2	04.11.2008
US 2007-0174291 A1	26.07.2007	None	
US 2004-0249801 A1	09.12.2004	US 7698327 B2	13.04.2010
US 2005-0198307 A1	08.09.2005	US 6836786 B1 US 7617275 B2	28.12.2004 10.11.2009

PATENT COOPERATION TREATY

From the
INTERNATIONAL SEARCHING AUTHORITY

To:
MICROSOFT CORPORATION

Attn - Virginia Coggan (vcoggan) LCA - International Patents
One Microsoft Way - 8/1188 Redmond Washington 98052-6399 USA

PCT

WRITTEN OPINION OF THE INTERNATIONAL SEARCHING AUTHORITY

(PCT Rule 43bis.1)

Date of mailing *(day/month/year)* **01 DECEMBER 2010 (01.12.2010)**

Applicant's or agent's file reference
326682-02

FOR FURTHER ACTION
See paragraph 2 below

International application No.	International filing date *(day/month/year)*	Priority date *(day/month/year)*
PCT/US2010/034617	**12 MAY 2010 (12.05.2010)**	19 MAY 2009 (19.05.2009)

International Patent Classification (IPC) or both national classification and IPC

G06F 17/00(2006.01)i, G06F 17/30(2006.01)i

Applicant

MICROSOFT CORPORATION

1. This opinion contains indications relating to the following items:

- [X] Box No. I Basis of the opinion
- [ ] Box No. II Priority
- [ ] Box No. III Non-establishment of opinion with regard to novelty, inventive step and industrial applicability
- [ ] Box No. IV Lack of unity of invention
- [X] Box No. V Reasoned statement under Rule 43bis.1(a)(i) with regard to novelty, inventive step or industrial applicability; citations and explanations supporting such statement
- [ ] Box No. VI Certain documents cited
- [ ] Box No. VII Certain defects in the international application
- [ ] Box No. VIII Certain observations on the international application

2. **FURTHER ACTION**
If a demand for international preliminary examination is made, this opinion will be considered to be a written opinion of the International Preliminary Examining Authority ("IPEA") except that this does not apply where the applicant chooses an Authority other than this one to be the IPEA and the chosen IPEA has notified the International Bureau under Rule 66.1bis(b) that written opinions of this International Searching Authority will not be so considered.

If this opinion is, as provided above, considered to be a written opinion of the IPEA, the applicant is invited to submit to the IPEA a written reply together, where appropriate, with amendments, before the expiration of 3 months from the date of mailing of Form PCT/ISA/220 or before the expiration of 22 months from the priority date, whichever expires later.
For further options, see Form PCT/ISA/220.

3. For further details, see notes to Form PCT/ISA/220.

Name and mailing address of the ISA/KR	Date of completion of this opinion	Authorized officer
Korean Intellectual Property Office Government Complex-Daejeon, 139 Seonsa-ro, Seo-gu, Daejeon 302-701, Republic of Korea Facsimile No. 82-42-472-7140	30 NOVEMBER 2010 (30.11.2010)	PARK, SANG HYUN Telephone No.82-42-481-8263

WRITTEN OPINION OF THE INTERNATIONAL SEARCHING AUTHORITY	International application No. PCT/US2010/034617

Box No. I Basis of this opinion

1. With regard to the **language**, this opinion has been established on the basis of :

   ☒ the international application in the language in which it was filed

   ☐ a translation of the international application into _____ , which is the language of a translation furnished for the purposes of international search (Rules 12.3(a) and 23.1(b))

2. ☐ This opinion has been established taking into account the **rectification of an obvious mistake** authorized by or notified to this Authority under Rule 91 (Rule 43*bis*.1(a))

3. With regard to any **nucleotide and/or amino acid sequence** disclosed in the international application, this opinion has been established on the basis of:

   a. a sequence listing filed or furnished
   ☐ on paper
   ☐ in electronic form

   b. time of filing or furnishing
   ☐ contained in the international application as filed.
   ☐ filed together with the international application in electronic form.
   ☐ furnished subsequently to this Authority for the purposes of search.

4. ☐ In addition, in the case that more than one version or copy of a sequence listing has been filed or furnished, the required statements that the information in the subsequent or additioanl copies is identical to that in the application as filed or does not go beyond the application as filed, as appropriate, were furnished.

5. Additional comments:

WRITTEN OPINION OF THE INTERNATIONAL SEARCHING AUTHORITY	International application No. PCT/US2010/034617

Box No. V Reasoned statement under Rule 43bis.1(a)(i) with regard to novelty, inventive step or industrial applicability; citations and explanations supporting such statement

1. Statement

Novelty (N)	Claims	1-15	YES
	Claims	NONE	NO
Inventive step (IS)	Claims	1-15	YES
	Claims	NONE	NO
Industrial applicability (IA)	Claims	1-15	YES
	Claims	NONE	NO

2. Citations and explanations :

(1) Reference is made to the following documents:

D1: US 2005-0246717 A1 (JOHN POOLE et al.) 03 November 2005
D2: US 2007-0174291 A1 (MICHAEL S. COOPER et al.) 26 July 2007
D3: US 2004-0249801 A1 (KAPUR SHYAM) 09 December 2004
D4: US 2005-0198307 A1 (DAVID ZOLLER et al.) 08 September 2005

(2) Novelty & Inventive Steps
Concerning claims 1-12:
Independent claim 1;
D1 discloses a method for providing a stored procedure as a Web service, comprising of: predefining a stored procedure to be invoked upon receiving a client request for a particular Web service; receiving an incoming request from a particular client for the particular Web service; in response to the incoming request, identifying the stored procedure that is predefined for the particular Web service; executing the identified stored procedure for generating a result set; and returning the result set back to the particular client.
The subject matter of claim 1 is different from D1, which is considered to be the closest prior art, in the request comprising an URL having a first parameter identifying a path to target subform control that loads the requested database object, a second parameter identifying a name of the database object, and a third parameter identifying a type for the database object. Accordingly, claim 1 is not anticipated by any of the cited documents, nor is it obvious by the documents, taken alone or in combination. Therefore, claim 1 is novel and involves an inventive step under PCT Article 33(2) and (3).
Dependent claims 2-12 (dependent on claim 1);
Claims 2-12 are dependent on claim 1 and therefore meet the requirements of PCT Article 33(2) and (3).

Concerning claims 13-15:
Independent claim 13;
The subject matter of claim 13 is different from D1 in the request comprising an URL a request to display a database object in-place, wherein the request includes a first parameter identifying a path to target subform control that loads the requested database object, a second parameter identifying a name of the database object, and a third parameter identifying a type for the database object. Accordingly, claim 13 is not anticipated by any of the cited documents, nor is it obvious by the documents, taken alone or in combination. Therefore, claim 13 is novel and involves an inventive step under PCT Article 33(2) and (3).

(Continued on Supplemental Box)

Supplemental Box

In case the space in any of the preceding boxes is not sufficient.
Continuation of :

Box V

Dependent claims 14-15 (dependent on claim 13);
Claims 14-15 are dependent on claim 13 and therefore meet the requirements of PCT Article 33(2) and (3).

(3) Industrial Applicability
The subject matter of claims 1-15 is believed to be industrially applicable under PCT Article 33(4) because the claimed invention can be used in the computer industry.

PTO/SB/20PCT-FI (01-11)
Approved for use through 01/31/2012. OMB 0651-0058
U.S. Patent and Trademark Office; U. S. DEPARTMENT OF COMMERCE
Under the Paperwork Reduction Act of 1995, no persons are required to respond to a collection of information unless it displays a valid OMB control number.

REQUEST FOR PARTICIPATION IN THE PATENT COOPERATION TREATY - PATENT PROSECUTION HIGHWAY (PCT-PPH) PILOT PROGRAM BETWEEN THE NATIONAL BOARD OF PATENTS AND REGISTRATION OF FINLAND (NBPR) AND THE USPTO

Application No:	12/468,067	Filing date:	May 19, 2009
First Named Inventor:	Steven Miles Greenberg		
Title of the Invention:	DATABASE APPLICATION NAVIGATION		

THIS REQUEST FOR PARTICIPATION IN THE PCT-PPH PILOT PROGRAM ALONG WITH THE REQUIRED DOCUMENTS MUST BE SUBMITTED VIA EFS-WEB. INFORMATION REGARDING EFS-WEB IS AVAILABLE AT HTTP://WWW.USPTO.GOV/EBC/EFS_HELP.HTML

APPLICANT HEREBY REQUESTS PARTICIPATION IN THE PCT-PPH PROGRAM AND PETITIONS TO MAKE THE ABOVE-IDENTIFIED APPLICATION SPECIAL UNDER THE PCT-PPH PROGRAM.

The above-identified application is (1) a national stage entry of the corresponding PCT application, or (2) a national stage entry of another PCT application which claims priority to the corresponding PCT application, or (3) a national application that claims domestic/ foreign priority to the corresponding PCT application, or (4) a national application which forms the basis for the priority claim in the corresponding PCT application, or (5) a continuing application of a U.S. application that satisfies one of (1) to (4) above, or (6) a U.S. application that claims domestic benefit to a U.S. provisional application which forms the basis for the priority claim in the corresponding PCT application.

The corresponding PCT application number(s) is/are: PCT/US10/34617

The international filing date of the corresponding PCT application(s) is/are: May 12, 2010

I. List of Required Documents:

a. **A copy of the latest international work product (WO/ISA, WO/IPEA, or IPER) in the above–identified corresponding PCT application(s)**

- [x] Is attached.
- [ ] Is not attached because the document is already in the U.S. application.

b. **A copy of all claims which were indicated as having novelty, inventive step and industrial applicability in the above-identified corresponding PCT application(s).**

- [x] Is attached.
- [ ] Is not attached because the document is already in the U.S. application.

c. **English translations of the documents in a. and b. above are attached (if the documents are not in the English language). A statement that the English translation is accurate is attached for the document in b. above.**

This collection of information is required by 35 U.S.C. 119, 37 CFR 1.55, and 37 CFR 1.102(d). The information is required to obtain or retain a benefit by the public, which is to file (and by the USPTO to process) an application. Confidentiality is governed by 35 U.S.C. 122 and 37 CFR 1.11 and 1.14. This collection is estimated to take 2 hours to complete, including gathering, preparing, and submitting the completed application form to the USPTO. Time will vary depending upon the individual case. Any comments on the amount of time you require to complete this form and/or suggestions for reducing this burden should be sent to the Chief Information Officer, U.S. Patent and Trademark Office, U.S. Department of Commerce, P.O. Box 1450, Alexandria, VA 22313-1450. DO NOT SEND FEES OR COMPLETED FORMS TO THIS ADDRESS.

Approved for use through 01/31/2012. OMB 0651-0058
U.S.Patent and Trademark Office; U.S. DEPARTMENT OF COMMERCE
Under the Paperwork Reduction Act of 1995, no persons are required to respond to a collection of information unless it displays a valid OMB control number.

REQUEST FOR PARTICIPATION IN THE PCT-PPH PILOT PROGRAM BETWEEN THE NBPR AND THE USPTO

(continued)

Application No.:	12/468,067
First Named Inventor:	Steven Miles Greenberg

d. **(1) An information disclosure statement listing the documents cited in the international work products (ISR, WO/ISA, WO/IPEA, IPER) of the corresponding PCT application.**

☐ Is attached

☑ Has already been filed in the above-identified U.S. application on February 9, 2011

(2) Copies of all documents (except) for U.S. patents or U.S. patent application publications)

☑ Are attached.

☐ Have already been filed in the above-identified U.S. application on _____

II. Claims Correspondence Table:

Claims in US Application	Patentable Claims in the corresponding PCT Application	Explanation regarding the correspondence
1-15	1-15	Claims are identical except for numerical references that refer to the drawings in the PCT application
16		US Claim 16 is patentable because it is dependent upon claim 15 which the ISR has deemed patentable in corresponding PCT claim 15.
17		US Claim 17 is patentable because it is dependent upon claim 16, which the ISR has deemed patentable through its dependence on PCT claim 15.
18		US Claim 18 is patentable because it is dependent upon claim 17, which the ISR has deemed patentable through its dependence on PCT claim 15.
19		US Claim 19 is patentable because it is dependent upon claim 18, which the ISR has deemed patentable through its dependence on PCT claim 15.
20	N/A	Claim canceled in preliminary amendment filed 4/29/11

III. All the claims in the US application sufficiently correspond to the patentable claims in the corresponding PCT application.

Signature /Damon A. Rieth/	Date April 29, 2011
Name (Print/Typed) Damon A. Rieth	Registration Number 52,167

Privacy Act Statement

The **Privacy Act of 1974 (P.L. 93-579)** requires that you be given certain information in connection with your submission of the attached form related to a patent application or patent. Accordingly, pursuant to the requirements of the Act, please be advised that: (1) the general authority for the collection of this information is 35 U.S.C. 2(b)(2); (2) furnishing of the information solicited is voluntary; and (3) the principal purpose for which the information is used by the U.S. Patent and Trademark Office is to process and/or examine your submission related to a patent application or patent. If you do not furnish the requested information, the U.S. Patent and Trademark Office may not be able to process and/or examine your submission, which may result in termination of proceedings or abandonment of the application or expiration of the patent.

The information provided by you in this form will be subject to the following routine uses:

1. The information on this form will be treated confidentially to the extent allowed under the Freedom of Information Act (5 U.S.C. 552) and the Privacy Act (5 U.S.C 552a). Records from this system of records may be disclosed to the Department of Justice to determine whether disclosure of these records is required by the Freedom of Information Act.
2. A record from this system of records may be disclosed, as a routine use, in the course of presenting evidence to a court, magistrate, or administrative tribunal, including disclosures to opposing counsel in the course of settlement negotiations.
3. A record in this system of records may be disclosed, as a routine use, to a Member of Congress submitting a request involving an individual, to whom the record pertains, when the individual has requested assistance from the Member with respect to the subject matter of the record.
4. A record in this system of records may be disclosed, as a routine use, to a contractor of the Agency having need for the information in order to perform a contract. Recipients of information shall be required to comply with the requirements of the Privacy Act of 1974, as amended, pursuant to 5 U.S.C. 552a(m).
5. A record related to an International Application filed under the Patent Cooperation Treaty in this system of records may be disclosed, as a routine use, to the International Bureau of the World Intellectual Property Organization, pursuant to the Patent Cooperation Treaty.
6. A record in this system of records may be disclosed, as a routine use, to another federal agency for purposes of National Security review (35 U.S.C. 181) and for review pursuant to the Atomic Energy Act (42 U.S.C. 218(c)).
7. A record from this system of records may be disclosed, as a routine use, to the Administrator, General Services, or his/her designee, during an inspection of records conducted by GSA as part of that agency's responsibility to recommend improvements in records management practices and programs, under authority of 44 U.S.C. 2904 and 2906. Such disclosure shall be made in accordance with the GSA regulations governing inspection of records for this purpose, and any other relevant (*i.e.*, GSA or Commerce) directive. Such disclosure shall not be used to make determinations about individuals.
8. A record from this system of records may be disclosed, as a routine use, to the public after either publication of the application pursuant to 35 U.S.C. 122(b) or issuance of a patent pursuant to 35 U.S.C. 151. Further, a record may be disclosed, subject to the limitations of 37 CFR 1.14, as a routine use, to the public if the record was filed in an application which became abandoned or in which the proceedings were terminated and which application is referenced by either a published application, an application open to public inspection or an issued patent.
9. A record from this system of records may be disclosed, as a routine use, to a Federal, State, or local law enforcement agency, if the USPTO becomes aware of a violation or potential violation of law or regulation.

CLAIMS

1. A computer storage medium having computer-executable instructions stored thereupon which, when executed by a computer, causes the computer to:

receive a request for a database object (124), the request comprising a uniform resource locator (URL) (120) having a first parameter (302B) identifying a path to a target subform control (206) that loads the requested database object (124), a second parameter (302D) identifying a name of the database object (124), and a third parameter (302C) identifying a type for the database object (124); and

in response to receiving the request, identifying the database object (124) using the parameters (302A-302C) of the URL (120) and causing the requested database object (124) to be displayed in the subform control (206) in response to the request.

2. The computer storage medium of claim 1, wherein the URL further comprises a fourth parameter identifying a page of the database object that should be made a current page.

3. The computer storage medium of claim 2, wherein the URL further comprises a fifth parameter identifying a data mode for the database object.

4. The computer storage medium of claim 3, wherein the data mode comprises an add mode, an edit mode, or a read-only mode.

5. The computer storage medium of claim 3, wherein the database object comprises a database form or a database report, and wherein the third parameter identifies whether the database object is a database form or a database report.

6. The computer storage medium of claim 3, wherein the URL further comprises a sixth parameter specifying a where condition for a record source of the database object.

7. The computer storage medium of claim 3, having further computer executable instructions stored thereupon which, when executed by the computer, cause the computer to:

receive a request to execute a macro action for opening a form; and

in response to the receiving the request, to open the form and to update the URL to reflect the opening of the form.

8. The computer storage medium of claim 3, having further computer executable instructions stored thereupon which, when executed by the computer, cause the computer to:

receive a request to execute a macro action to open a report; and

in response to the receiving the request, to open the report and to update the URL to reflect the opening of the report.

9. The computer storage medium of claim 3, having further computer executable instructions stored thereupon which, when executed by the computer, cause the computer to:

receive a request to execute a macro action for showing a record; and

in response to the receiving the request, to cause the record to be displayed and to update the URL to reflect the displaying of the record.

10. The computer storage medium of claim 3, having further computer executable instructions stored thereupon which, when executed by the computer, cause the computer to:

receive a request to execute a macro action for browsing to a database object in-place; and

in response to the receiving the request, to cause the database object to be displayed in-place and to update the URL to reflect the displaying of the database object.

11. The computer storage medium of claim 3, having further computer executable instructions stored thereupon which, when executed by the computer, cause the computer to:

receive a request from a user interface control to display a database object; and

in response to the receiving the request from the user interface control, to cause the database object to be displayed and to update the URL to reflect the displaying of the database object.

12. The computer storage medium of claim 11, wherein the user interface control comprises a navigation control.

13. A computer-implemented method for displaying a database object in-place, the method comprising performing computer-implemented operations for:

receiving a request to display a database object (124) in-place, the request including a first parameter identifying a path to a target subform control (206) that loads the requested database object (124), a second parameter identifying a name of the database object (124), and a third parameter identifying a type for the database object (124); and

in response to receiving the request, identifying the database object (124) using parameters and causing the requested database object (124) to be displayed in-place in the subform control (206) in response to the request.

14. The computer-implemented method of claim 13, wherein the request to display the database object in-place comprises a request to execute a macro action for displaying a database object in-place.

15. The computer-implemented method of claim 14, wherein the request further comprises a fourth parameter identifying a page of the database object that should be made a current page when the database object is displayed in-place in the subform control.

PATENT

First Named Inventor: Steven Miles Greenberg
Application No.: 12/468,067
Filed: May 19, 2009
Customer No.: 69316
Title: DATABASE APPLICATION NAVIGATION

Attorney Docket No.: 326682.01
Group Art Unit: 2155
Examiner: WOO, ISAAC M
Confirmation Number: 9260

Commissioner for Patents
P.O. Box 1460
Alexandria, VA 22313-1450

Statement on Request for Participation in the PCT-Patent Prosecution Highway Pilot Program

Dear Sir:

Applicant states that the claims in the US application were amended to sufficiently correspond to the claims in the PCT application. Additionally, applicant would like to bring to attention that the US dependent claims that were omitted or combined with another dependent claim in the corresponding PCT application should be deemed patentable because their respective independent claim was deemed patentable in the international search report. Therefore, applicant respectfully requests the omitted dependent claims in the US application also be considered.

Additionally, applicant would like to bring to attention the formatting differences in the PCT claims, specifically the numerical references that refer to the drawings. For your convenience, a copy of the claims in the PCT application is included.

Accordingly, applicant requests the petition to participate in the PCT – Patent Prosecution Highway Pilot Program be granted. If you have any questions, please do not hesitate to call the Applicant's attorney at the telephone number listed below.

Respectfully submitted,

Date: April 29, 2011

By: /Damon A. Rieth/

Atty: Damon A. Rieth
Reg. No.: 52,167
Direct telephone: (425) 421-2377
Microsoft Corporation
One Microsoft Way
Redmond WA 98052-6399

CERTIFICATE OF MAILING OR TRANSMISSION
(Under 37 CFR § 1.8(a)) or ELECTRONIC FILING

I hereby certify that this correspondence is being electronically deposited with the USPTO via EFS-Web on the date shown below:

April 29, 2011
Date

/Eric Matt/
Eric Matt

UNITED STATES PATENT AND TRADEMARK OFFICE

UNITED STATES DEPARTMENT OF COMMERCE
United States Patent and Trademark Office
Address: COMMISSIONER FOR PATENTS
P.O. Box 1450
Alexandria, Virginia 22313-1450
www.uspto.gov

APPLICATION NO.	FILING DATE	FIRST NAMED INVENTOR	ATTORNEY DOCKET NO.	CONFIRMATION NO.
12/468,067	05/19/2009	Steven Miles Greenberg	326682.01	9260

69316 7590 07/08/2011
MICROSOFT CORPORATION
ONE MICROSOFT WAY
REDMOND, WA 98052

EXAMINER
WOO, ISAAC M

ART UNIT	PAPER NUMBER
2155	

NOTIFICATION DATE	DELIVERY MODE
07/08/2011	ELECTRONIC

Please find below and/or attached an Office communication concerning this application or proceeding.

The time period for reply, if any, is set in the attached communication.

Notice of the Office communication was sent electronically on above-indicated "Notification Date" to the following e-mail address(es):

vffiling@microsoft.com
stevensp@microsoft.com
ntovar@MICROSOFT.COM

UNITED STATES PATENT AND TRADEMARK OFFICE

Commissioner for Patents
United States Patent and Trademark Office
P.O. Box 1450
Alexandria, VA 22313-1450
www.uspto.gov

MICROSOFT CORPORATION
ONE MICROSOFT WAY
REDMOND WA 98052

In re Application of: GREENBERG et al.
Application No.: 12/468,067
Docket #: **326682.01**
Filed: May 19, 2009
For: **DATABASE APPLICATION NAVIGATION**

DECISION ON REQUEST TO PARTICIPATE IN PATENT PROSECUTION HIGHWAY PROGRAM AND PETITION TO MAKE SPECIAL UNDER 37 CFR 1.102(a)

This is a decision on the request to participate in the PCT-Patent Prosecution Highway **(PCT-PPH)** pilot program and the petition under 37 CFR 1.102(a), filed April 29, 2011, to make the above- identified application special.

The petition is **DENIED.**

A grantable request to participate in the PPH program and petition to make special require:

(1) The U.S. application is
(a) a national stage entry of the corresponding PCT application

Or

(b) a national application which forms the basis for the priority claim in the corresponding PCT application

Or

(c) *a* national stage entry of another PCT application (which can be filed in any competent receiving office) which claims priority to the corresponding PCT application

Or

(d) a national application claiming foreign domestic priority to the corresponding PCT application.
Applications subject to a secrecy order (35U.S.C.181) are excluded and not subject to participation in the PCT-PPH pilot program.

Or

(e) a continuing application (continuation, divisional, or continuation-in-part) of the U.S. application which satisfies one of the above (a) to (d) scenarios.

(2) The latest work product in the international phase of the PCT application corresponding to the U.S. application, namely the WO/ISA, or the WO/IPEA, or the IPER, indicates at least one claim in the PCT application has novelty, inventive step and industrial applicability. In case any observation is described

in Box VIII of the WO/ISA, or the WO/IPEA, or the IPER which forms the basis for the PCT-PPH request, applicant must identify and explain why the claim(s) is/are not subject to any observation described in Box VIII irrespective of whether an amendment is submitted to correct the observation described in Box VIII. The U.S. application will not be eligible to participate in the PCT-PPH pilot program if applicant does not identify and explain why the claim(s) is/are not subject to the observation described in Box VIII.

Applicant may not file a request to participate in the PCT-PPH pilot program on the basis of an International Search Report (ISR) only.

(3) Applicant must:

a. Ensure all the claims in the U.S. application sufficiently correspond or be amended to sufficiently correspond to one or more of those claims indicated as having novelty, inventive step and industrial applicability and free of any observation described in Box VIII in the latest work product of the corresponding PCT application and

b. Submit a claims correspondence table in English;

The USPTO will accept claims written in dependent form in the U.S. application which are narrower in scope than the claims indicated as having novelty, inventive step and industrial applicability and free of any observation described in Box VIII in the latest work product of the corresponding PCT application.

(4) Substantive Examination of the U.S. application has not begun;

(5) Applicant must submit a copy of:

a. the latest international work product, WO/ISA, or WO/IPEA or PER, which indicated that the claim(s) has/have novelty, inventive step and industrial applicability along with an English translation thereof if the copy of the latest international work product is not in the English language, unless the U.S. application and the corresponding PCT application satisfy the relationship noted in (1)(a) above.

(6) Applicant must submit a copy of:

a. the claims from the corresponding PCT application which were indicated as having novelty, inventive step and industrial applicability in the latest work product of the PCT application,
b. an English translation of the claims and
c. a statement that the English translation is accurate.

If the claims in the U.S. application are identical to the claims from the corresponding PCT application, and are in the English language, applicant may just indicate such in the PCT-PPH request and it will not be necessary for applicant to submit a copy of the claims from the corresponding PCT application.

(7) Applicant must submit:

a. An IDS listing the documents cited in the work products in the international phase of the PCT application corresponding to the U.S. application, namely the WO/ISA, or the WO/IPEA, or the IPER,(unless already submitted in this application)

b. Copies of the documents except U.S. patents or U.S. patent application publications (unless already submitted in this application);

The request to participate in the PPH program and petition are found to not comply with the above requirements, since a first action on the merits was mailed on June 7, 2011.

Accordingly, the Petition is **DENIED.**

Telephone inquiries concerning this decision should be directed to Mano Padmanabhan at 571-272-4210.

All other inquiries concerning the examination or status of the application is accessible in the PAIR system at http://www.uspto.gov/ebc/index.html.

/Mano Padmanabhan/

Mano Padmanabhan
Quality Assurance Specialist, Technology Center 2100, Workgroup 2180
571-272-4210

UNITED STATES PATENT AND TRADEMARK OFFICE

Commissioner for Patents
United States Patent and Trademark Office
P.O. Box 1450
Alexandria, VA 22313-1450
www.uspto.gov

E I DU PONT DE NEMOURS AND COMPANY
LEGAL PATENT RECORDS CENTER
BARLEY MILL PLAZA 25/1125
4417 LANCASTER PIKE
WILMINGTON DE 19805

MAILED
JUL 15 2011
OFFICE OF PETITIONS

In re Application of :
Haixin Yang et al. :
Application No. 12/468,093 : DECISION ON PETITION
Filed: May 19, 2009 :
Attorney Docket No. **EL0796USNA** :

This is a decision on the petition under the unintentional provisions of 37 CFR 1.137(b), filed June 22, 2011, to revive the above-identified application.

This application became abandoned for failure to timely pay the issue and publication fees on or before June 21, 2011, as required by the Notice of Allowance and Fee(s) Due, mailed March 21, 2011. Accordingly, the date of abandonment of this application is June 22, 2011.

The petition is hereby **GRANTED**.

The petition satisfies the requirements of 37 CFR 1.137(b) in that petitioner has supplied (1) the reply in the form of payment of the issue fee of $1,510 and the publication fee of $300, (2) the petition fee of $1,620; and (3) a proper statement of unintentional delay.

Telephone inquiries concerning this decision should be directed to JoAnne Burke at (571) 272-4584.

This application is being referred to the Office of Data Management for processing into a patent.

JoAnne Burke
Petitions Examiner
Office of Petitions

UNITED STATES PATENT AND TRADEMARK OFFICE

Commissioner for Patents
United States Patent and Trademark Office
P.O. Box 1450
Alexandria, VA 22313-1450
www.uspto.gov

PEARL COHEN ZEDEK LATZER, LLP
1500 BROADWAY
12TH FLOOR
NEW YORK NY 10036

MAILED
APR 11 2011
OFFICE OF PETITIONS

In re Application of	:	
Nanikashvili, Reuven	:	DECISION NOTING JOINDER OF
Application No. 12/468,134	:	INVENTOR AND PETITION
Filed: May 19, 2009	:	UNDER 37 CFR 1.47
Attorney Docket No. P-71634-US2	:	

Papers filed on September 7, 2010 and September 14, 2010 in response to a "Decision Refusing Status Under 37 CFR 1.47(b)," mailed July 14, 2010, included a Declaration signed by a previously non-signing inventor, Reuven Nanikashvili, in compliance with 37 CFR 1.63.

The petition is **DISMISSED AS MOOT**.

In view of the joinder of the inventor, further consideration under § 1.47 is not necessary. This application does not have any Rule 1.47 status and no such status should appear on the record for this file. This application need not be returned to this Office for any further consideration under 37 CFR 1.47.

Petitioner is reminded that under 37 CFR 1.48(a), if the correct inventor or inventors are not named in an executed oath or declaration under 37 CFR 1.63 in a nonprovisional application for patent, the application can be amended to name only the actual inventor or inventors so long as the error in the naming of the inventor or inventors occurred without any deceptive intention on the part of the person named as an inventor in error or the person who through error was not named as an inventor.

37 CFR 1.48(a) requires that the amendment be accompanied by: (1) a request to correct the inventorship that sets forth the desired inventorship change; (2) a statement from each person being added and from each person being deleted as an inventor that the error occurred without deceptive intention on his or her part; (3) an oath or declaration by each actual inventor or inventors as required by 37 CFR 1.63 or as permitted by 37 CFR 1.42, 1.43 or 1.47; (4) the fee set forth in 37 CFR 1.17 (i); and (5) the written consent of any existing assignee, if any of the originally named inventors has executed an assignment.

This application is being referred to Technology Center AU 2857 for examination on the merits.

Telephone inquiries should be directed to the undersigned at (571) 272-3206.

Liana Walsh

Liana Walsh
Petitions Examiner
Office of Petitions

UNITED STATES PATENT AND TRADEMARK OFFICE

UNITED STATES DEPARTMENT OF COMMERCE
United States Patent and Trademark Office
Address: COMMISSIONER FOR PATENTS
P.O. Box 1450
Alexandria, Virginia 22313-1450
www.uspto.gov

APPLICATION NO.	FILING DATE	FIRST NAMED INVENTOR	ATTORNEY DOCKET NO.	CONFIRMATION NO.
12/468,145	05/19/2009	Ryutaro ICHIMURA	P36446	9406

7055 7590 02/07/2011
GREENBLUM & BERNSTEIN, P.L.C.
1950 ROLAND CLARKE PLACE
RESTON, VA 20191

EXAMINER
VO, PETER DUNG BA

ART UNIT	PAPER NUMBER
3718	

NOTIFICATION DATE	DELIVERY MODE
02/07/2011	ELECTRONIC

Please find below and/or attached an Office communication concerning this application or proceeding.

The time period for reply, if any, is set in the attached communication.

Notice of the Office communication was sent electronically on above-indicated "Notification Date" to the following e-mail address(es):

gbpatent@gbpatent.com
pto@gbpatent.com

UNITED STATES PATENT AND TRADEMARK OFFICE

Commissioner for Patents
United States Patent and Trademark Office
P.O. Box 1450
Alexandria, VA 22313-1450
www.uspto.gov

GREENBLUM & BERNSTEIN, P.L.C.
1950 ROLAND CLARKE PLACE
RESTON VA 20191

In re Application of:
ICHIMURA, RYUTARO
Serial No.: 12/468,145
Filed: May 19, 2009
Docket: P36446
Title: VIDEO GAME PROCESSING DEVICE, VIDEO GAME PROCESSING METHOD AND VIDEO GAME PROCESSING PROGRAM

DECISION ON REQUEST TO PARTICIPATE IN PATENT PROSECUTION HIGHWAY (PPH) AND PETITION TO MAKE SPECIAL UNDER 37 CFR 1.102(a)

This is a decision on the request to participate in the Patent Prosecution Highway (PPH) program and the petition under 37 CFR 1.102(a), filed Feb. 3, 2011, to make the above-identified application special.

The request and petition are **Granted**.

A grantable request to participate in the PPH program and petition to make special require:

(1) The U.S. application must validly claim priority under 35 U.S.C. 119(a) to one or more corresponding application(s) filed in the JPO or to a PCT application that does not contain any priority claim, or the U.S. application must be a national stage entry of a PCT application that does not contain any priority claim;
(2) Applicant must submit a copy of the allowable/patentable claim(s) from the JPO application(s) along with an English translation thereof and a statement that the English translation is accurate;
(3) All the claims in the U.S. application must sufficiently correspond or be amended to sufficiently correspond to the allowable/patentable claim(s) in the JPO application(s);
(4) Examination of the U.S. application has not begun;
(5) Applicant must submit a copy of all the office actions from each of the JPO application(s) containing the allowable/patentable claim(s) along with an English translation thereof and a statement that the English translation is accurate; and

(6) Applicant must submit an IDS listing the documents cited by the JPO examiner in the JPO office action along with copies of documents except U.S. patents or U.S. patent application publications.

In light of the petition being properly submitted, the request to participate in the PPH program and the petition comply with the above requirements. Accordingly, the above-identified application has been accorded "special" status.

The applicant is encouraged to cite and submit all relevant prior art references, if any, to facilitate examination in this application. This application will be forwarded to an examiner for examination.

Telephone inquiries concerning this decision should be directed to Henry C. Yuen at 571-272-4856. All other inquiries concerning the examination or status of the application should be directed to David Lewis, SPE of Art Unit 3714, and 571-272-7673 for Class 463/40 and also accessible in the PAIR system at http://www.uspto.gov/ebc.index.html.

Petition is **granted**.

/Henry C. Yuen/

Henry C. Yuen, Special Programs Examiner
Technology Center 3700 – Mechanical Engineering,
Manufacturing and Products
571-272-4856

UNITED STATES PATENT AND TRADEMARK OFFICE

Commissioner for Patents
United States Patent and Trademark Office
P.O. Box 1450
Alexandria, VA 22313-1450
www.uspto.gov

MAILED
FEB 09 2012
OFFICE OF PETITIONS

KLEMCHUK KUBASTA LLP
8150 NORTH CENTRAL EXPRESSWAY
10TH FLOOR
DALLAS, TX 75206

In re Application of
Thomas E. Drake, et al.
Application No. 12/468,165
Filed: May 19, 2009
Attorney Docket No.: 1620-0002

ON PETITION

This is a decision on the petition, filed December 28, 2011, to revive the above-identified application under the provisions of 37 CFR 1.137(b).

The petition is **GRANTED**.

This application became abandoned for failure to submit corrected drawings on or before December 2, 2011, as required by the Notice of Allowability mailed September 2, 2011. A Notice of Abandonment was mailed on December 20, 2011. In response, on December 28, 2011, the present petition was filed.

The petition satisfies the requirements of 37 CFR 1.137(b) in that petitioner has supplied (1) the reply in the form of corrected drawings, (2) the petition fee of $930; and (3) an adequate statement of unintentional delay.

The application is being referred to the Office of Data Management to oversee the review of the drawings filed December 28, 2011 and for processing into a patent.

Telephone inquires related to this decision may be directed to the undersigned at (571) 272-3204. Telephone inquiries related to processing as a patent should be directed to (571) 272-4200

/SDB/

Sherry D. Brinkley
Petitions Examiner
Office of Petitions

UNITED STATES PATENT AND TRADEMARK OFFICE

UNITED STATES DEPARTMENT OF COMMERCE
United States Patent and Trademark Office
Address: COMMISSIONER FOR PATENTS
P.O. Box 1450
Alexandria, Virginia 22313-1450
www.uspto.gov

APPLICATION NO.	FILING DATE	FIRST NAMED INVENTOR	ATTORNEY DOCKET NO.	CONFIRMATION NO.
12/468,226	05/19/2009	RYO TOMOKIYO	J-09-0288	9547

7590 01/18/2011

Mr. Jackson Chen
6535 N. STATE HWY 161
IRVING, TX 75039

EXAMINER
GHAYOUR, MOHAMMAD H

ART UNIT	PAPER NUMBER
2611	

NOTIFICATION DATE	DELIVERY MODE
01/18/2011	ELECTRONIC

DECISION GRANTING PETITION UNDER 37 CFR 1.138(d)

The declaration of express abandonment is recognized

This is in response to the petition under 37 CFR 1.138(d), requesting for a refund of any previously paid search fee and excess claims fee in the above-identified application.

The petition is granted.

The express abandonment is recognized. Any previously paid search fee and excess claims fee are hereby refunded.

Telephone inquiries should be directed to the Office of Data Management at (571) 272-4200.

Mimi Jarmes

Patent Publication Branch
Office of Data Management

FORM PET651G (Rev. 08/07)

UNITED STATES PATENT AND TRADEMARK OFFICE

Commissioner for Patents
United States Patent and Trademark Office
P.O. Box 1450
Alexandria, VA 22313-1450
www.uspto.gov

DINSMORE & SHOHL LLP
FIFTH THIRD CENTER, ONE SOUTH MAIN STREET
SUITE 1300
DAYTON OH 45402-2023

MAILED

OCT 12 2010

OFFICE OF PETITIONS

In re Application of	:	
Frank W. Ciarallo, et al.	:	
Application No. 12/468,283	:	DECISION ON PETITION
Filed: May 19, 2009	:	
Attorney Docket No. WRU 0321	:	
PA/40878.455		

This is a decision on the petition under the unintentional provisions of 37 CFR 1.137(b), filed September 27, 2010, to revive the above-identified application.

The petition is **GRANTED.**

The application became abandoned for failure to reply in a timely manner to the Notice to File Missing Parts of Nonprovisional Application (Notice), mailed May 29, 2009. The Notice set a period for reply of two (2) months from the mail date of the Notice. A one (1) month extension of time under the provisions of 37 CFR 1.136(a) were obtained. Accordingly, the application became abandoned on August 30, 2009. The Notice of Abandonment was mailed September 17, 2010.

The petition satisfies the requirements of 37 CFR 1.137(b) in that petitioner has supplied (1) the reply in the form of replacement drawings, (2) the petition fee of $810, and (3) a proper statement of unintentional delay.

An extension of time under 37 CFR 1.136 must be filed prior to the expiration of the maximum extendable period for reply. See In re Application of S., 8 USPQ2d 1630, 1631 (Comm'r Pats. 1988). Since the $245 extension of time fee submitted with the petition on September 27, 2010 was subsequent to the maximum extendable period for reply, petitioner may request a refund of this fee by writing to the following address: Mail Stop 16, Commissioner for Patents, P. O. Box 1450, Alexandria, VA 22313-1450. A copy of this decision should accompany petitioner's request.

Telephone inquiries concerning this decision should be directed to Terri Johnson at (571) 272-2991.

This application is being referred to the Office of Patent Application Processing for appropriate action on the reply received.

/Terri Johnson/
Terri Johnson
Petitions Examiner
Office of Petitions

UNITED STATES PATENT AND TRADEMARK OFFICE

Commissioner for Patents
United States Patent and Trademark Office
P.O. Box 1450
Alexandria, VA 22313-1450
www.uspto.gov

ABSOLUTE TECHNOLOGY LAW GROUP LLC
3316 W. Wisconsin Avenue
MILWAUKEE WI 53208

MAILED

JAN 03 2012

OFFICE OF PETITIONS

In re Application of	:	
Bob Baker	:	
Application No. 12/468,330	:	DECISION ON PETITION
Filed: May 19, 2009	:	TO WITHDRAW
Attorney Docket No. **BAKER_NP_0509**	:	FROM RECORD
	:	

This is a decision on the Request to Withdraw as attorney or agent of record under 37 CFR § 1.36(b), filed December 6, 2011.

The request is **NOT APPROVED**.

A review of the Office record indicates that there is a discrepancy in the request as submitted in that the registration number 56,059 does not match the name "Jill Gilbert Welytok" listed thereon. The Patent and Trademark Office records indicate that the name "Jill Gilbert" coincide with registration number 56,059. Therefore, in view of this discrepancy that registration number 56,059 is not associated with the name "Jill Gilbert Welytok" the request for withdrawal as attorney can not be approved at this time.

All future communications from the Office will continue to be directed to the address of record until otherwise properly notified by the applicant.

Telephone inquires concerning this decision should be directed to the undersigned at 571-272-4584.

/JoAnne Burke/
JoAnne Burke
Petitions Examiner
Office of Petitions

UNITED STATES PATENT AND TRADEMARK OFFICE

Commissioner for Patents
United States Patent and Trademark Office
P.O. Box 1450
Alexandria, VA 22313-1450
www.uspto.gov

July 6, 2011

WPAT, PC
INTELLECTUAL PROPERTY ATTORNEYS
1100 Quail Street, Suite 202
Newport Beach CA 92660

In re Application of	:	
Shih, Ming-Jhih	:	**DECISION ON PETITION**
Application No. 12/468,335	:	
Filed: May 19, 2009	:	***ACCEPTANCE OF COLOR***
Attorney Docket No. 19408-013	:	***DRAWINGS***

This is a decision on the Petition to Accept Color Drawings under 37 C.F.R 1.84 (a) (2), received in the United States Patent and Trademark Office (USPTO) July 16, 2009.

The petition is **GRANTED**.

A grantable petition under 37 C.F.R. 1.84(a) (2) must be accompanied by the following.

1. The fee set forth under 37 C.F.R. 1.17(h),
2. Three (3) sets of the color drawings in question, or (1) set if filed via EFS, and
3. The specification contains appropriate language referring to the color drawings as the first paragraph in that portion of the specification relating to the brief description of the drawings.

The petition was accompanied by all of the required fees and drawings. The specification contains the appropriate language. Therefore, the petition is GRANTED.

Telephone inquires relating to this decision may be directed to the undersigned in the Office of Data Management at 571-272-4200.

/Diane Terry/
Quality Control Specialist
Office of Data Management
Publications Branch

UNITED STATES PATENT AND TRADEMARK OFFICE

Commissioner for Patents
United States Patent and Trademark Office
P.O. Box 1450
Alexandria, VA 22313-1450
www.uspto.gov

BUCHANAN, INGERSOLL & ROONEY PC
POST OFFICE BOX 1404
ALEXANDRIA VA 22313-1404

MAILED
JAN 11 2012
OFFICE OF PETITIONS

In re Application of:	: DECISION ON REQUEST TO
Teramoto et al.	: PARTICIPATE IN THE PATENT
Application No. 12/468,378	: PROSECUTION HIGHWAY
Filed: May 19, 2009	: PROGRAM AND PETITION
Attorney Docket No. 1034528-000041	: TO MAKE SPECIAL UNDER
	: 37 CFR 1.102(a)

This is a decision on the request to participate in the Patent Prosecution Highway (PPH) program and the petition under 37 CFR 1.102(a), filed August 17, 2011, to make the above-identified application special.

The request and petition are **DISMISSED**.

Discussion

A grantable request to participate in the PPH program and petition to make special require:

1. The U.S. application is

    a. a Paris Convention application which either
        i. validly claims priority under 35 U.S.C. 119(a) and 37 CFR 1.55 to one or more applications filed in the KIPO, or
        ii. validly claims priority under 35 U.S.C. 119(a)/365(a) to a PCT application that contains no priority claims,

    or

    b. a national stage application under the PCT (an application which entered the national stage in the U.S. from a PCT international application after compliance with 35 U.S.C. 371), which PCT application
        i. validly claims priority under 35 U.S.C. 365(b) to an application filed in the KIPO, or
        ii. validly claims priority under 35 U.S.C. 365(b) to a PCT application that contains no priority claims, or
        iii. contains no priority claim,

    or

   c. a so-called bypass application filed under 35 U.S.C. 111(a) which validly claims benefit under 35 U.S.C. 120 to a PCT application, which PCT application
      i. validly claims priority under 35 U.S.C. 365(b) to an application filed in the KIPO, or
      ii. validly claims priority under 35 U.S.C. 365(b) to a PCT application that contains no priority claims, or
      iii. contains no priority claim;
2. Applicant must submit a copy of:
   a. The allowable/patentable claim(s) from the KR application(s);
   b. An English translation of the allowable/patentable claim(s), and
   c. A statement that the English translation is accurate (if the claims were published in a language other than English);
3. Applicant must:
   a. Ensure that all the claims in the U.S. application must sufficiently correspond or be amended to sufficiently correspond to the allowable/patentable claim(s) in the KR application(s), and
   b. Submit a claims correspondence table in English;
4. Examination of the U.S. application has not begun;
5. Applicant must submit:
   a. A copy of all the office actions (which are relevant to patentability), excluding "Decision to Grant a Patent" from each of the KR application(s) containing the allowable/patentable claim(s);
   b. An English language translation of the KIPO office action; and
   c. A statement that the English translation is accurate (if the office actions are not in the English language);
6. Applicant must submit:
   a. An IDS listing the documents cited by the KIPO examiner in the KIPO office action (unless already filed in this application); and
   b. Copies of all the documents cited in the KIPO office action, except U.S. patents or U.S. patent application publications (unless already filed in this application);

This request to participate in the PPH program and petition is assessed as follows:

Regarding the requirement of condition (5), the examination of the U.S. application has begun. Currently, a non-final Office Action was mailed September 6, 2011 in the above-identified application.

Telephone inquiries concerning this decision should be directed to Joan Olszewski at 571-272-7751.

All other inquiries concerning the examination or status of the application is accessible in the PAIR system at http://www.uspto.gov/ebc/index.html.

/dab/
David Bucci
Petitions Examiner
Office of Petitions

UNITED STATES PATENT AND TRADEMARK OFFICE

Commissioner for Patents
United States Patent and Trademark Office
P.O. Box 1450
Alexandria, VA 22313-1450
www.uspto.gov

Paper No.

SABIC - LNP-CE 08CE
SABIC Innovative Plastics - IP LEGAL
ONE PLASTICS AVENUE
PITTSFIELD MA 01201-3697

MAILED
DEC 30 2011
OFFICE OF PETITIONS

In re Application of	:	
Li et al.	:	
Application No. 12/468,420	:	DECISION ON PETITION
Filed: May 19, 2009	:	PURSUANT TO
Attorney Docket No.	:	37 C.F.R. § 1.137(B)
08LNP0003-US-NP (232464)	:	
Title: HIGH DIELECTRIC	:	
CONSTANT LASER DIRECT	:	
STRUCTURING MATERIALS	:	

This is a decision on the petition pursuant to 37 C.F.R. § 1.137(b), filed December 16, 2011, to revive the above-identified application.

This petition pursuant to 37 C.F.R. § 1.137(b) is **GRANTED**.

The above-identified application became abandoned for failure to reply in a timely manner to a non-final Office action, mailed July 12, 2010, which set a shortened statutory period for reply of three months. No response was received, and no extensions of time under the provisions of 37 C.F.R. § 1.136(a) were requested. Accordingly, the above-identified application became abandoned on October 13, 2010. A notice of abandonment was mailed on January 20, 2011.

A grantable petition pursuant to 37 C.F.R. § 1.137(b) must be accompanied by:

(1) The reply required to the outstanding Office action or notice, unless previously filed;
(2) The petition fee as set forth in 37 C.F.R. § 1.17(m);
(3) A statement that the entire delay in filing the

required reply from the due date for the reply until the filing of a grantable petition pursuant to this paragraph was unintentional. The Commissioner may require additional information where there is a question whether the delay was unintentional, and;

(4) Any terminal disclaimer (and fee as set forth in 37 C.F.R. § 1.20(d)) required pursuant to paragraph (d) of this section.

With this petition, Petitioner has submitted an amendment, the petition fee, and the proper statement of unintentional delay. As such, the first three requirements of Rule 1.137(b) have been met. The fourth requirement of Rule 1.137(b) is not applicable.

The Technology Center will be notified of this decision, and jurisdiction over this application is transferred to the Technology Center, so that the application may receive further processing. The Technology Center's support staff will notify the Examiner of this decision, so that the amendment that was received on December 16, 2011 can be processed in due course.

Petitioner may find it beneficial to view Private PAIR within a fortnight of the present decision to ensure that the revival has been acknowledged by the Technology Center in response to this decision. It is noted that all inquiries with regard to any failure of that change in status should be directed to the Technology Center where that change of status must be effected - **the Office of Petitions cannot effectuate a change of status.**

Petitioner has also submitted a three-month extension of time. An extension of time under 37 C.F.R. § 1.136 must be filed prior to the expiration of the maximum extendable period for reply.[1] Accordingly, since the $1270 extension of time submitted with the petition on December 16, 2011 was filed subsequent to the maximum extendable period for reply, this fee is unnecessary and will be credited to Petitioner's credit card in due course.

It is noted that the address listed on the petition differs from the address of record. Petitioner has included a change of correspondence address with this renewed petition, however it cannot be entered. A fully-executed declaration was included on initial deposit, and the request to change the correspondence address has not been executed in accordance with 37 C.F.R. §§ 1.33(a)(2) and 1.33(b)(1). More specifically, Petitioner is

1 See In re Application of S., 8 USPQ2d 1630, 1631 (Comm'r Pats. 1988).

not associated with Customer Number 43245; therefore she is not of record, and cannot execute this document.

If Petitioner desires to receive future correspondence regarding this application, a properly executed change of correspondence address must be submitted. A courtesy copy of this decision will be mailed to Petitioner. However, all future correspondence will be directed to the address of record until such time as appropriate instructions are received to the contrary. Petitioner will not receive future correspondence related to this application unless Change of Correspondence Address, Patent Form (PTO/SB/122) is submitted for the above-identified application. For Petitioner's convenience, a blank Change of Correspondence Address, Patent Form (PTO/SB/122), may be found at http://www.uspto.gov/web/forms/sb0122.pdf.

Telephone inquiries regarding *this decision* should be directed to the undersigned at (571) 272-3225.[2] All other inquiries concerning this application should be directed to the Technology Center.

Paul Shanoski
Senior Attorney
Office of Petitions

cc: LYNN M. WARREN STEWART
CANTOR COLBURN LLP
20 CHURCH STREET
22ND FLOOR
HARTFORD, CT 06103

2 Petitioner will note that all practice before the Office should be in writing, and the action of the Office will be based exclusively on the written record in the Office. See 37 C.F.R. § 1.2. As such, Petitioner is reminded that no telephone discussion may be controlling or considered authority for Petitioner's further action(s).

UNITED STATES PATENT AND TRADEMARK OFFICE

Commissioner for Patents
United States Patent and Trademark Office
P.O. Box 1450
Alexandria, VA 22313-1450
www.uspto.gov

CHOATE, HALL & STEWART / CITRIX SYSTEMS, INC.
TWO INTERNATIONAL PLACE
BOSTON MA 02110

MAILED

DEC 06 2010

OFFICE OF PETITIONS

In re Application of	:	
Henry Collins	:	
Application No. 12/468,424	:	DECISION ON PETITION
Filed: May 19, 2009	:	TO WITHDRAW
Attorney Docket No. 2006579-1696 (CTX-409)	:	FROM RECORD
	:	

This is a decision on the Request to Withdraw as attorney or agent of record under 37 C.F.R. § 1.36(b), filed November 10, 2010.

The request is **NOT APPROVED.**

The Office will no longer accept address changes to a new practitioner or law firm filed with a Request, absent the filing of a power of attorney to the new representative. The Office will either change the correspondence address of record to the most current address information provided for the assignee of the entire interest who properly became of record under 37 CFR 3.71 or, if no assignee of the entire interest has properly been made of record under 37 CFR 3.71, the most current address information provided for the first named inventor.

Accordingly, the request to withdraw from record cannot be approved because the request to change the correspondence address is not that of: (1) the first named inventor; or (2) an assignee of the entire interest under 37 C.F.R 3.71. If an assignee has ownership in this application, then a current Statement under 37 CFR 3.73(b) or a copy of the actual assignment must be provided with a renewed request.

All future communications from the Office will continue to be directed to the above-identified address until otherwise properly notified.

Telephone inquiries concerning this decision should be directed to the undersigned at 571-272-4618.

/Kimberly Inabinet/

Kimberly Inabinet
Petitions Examiner
Office of Petitions

UNITED STATES PATENT AND TRADEMARK OFFICE

Commissioner for Patents
United States Patent and Trademark Office
P.O. Box 1450
Alexandria, VA 22313-1450
www.uspto.gov

K&L GATES LLP
210 SIXTH AVENUE
PITTSBURGH, PA 15222-2613

MAILED

DEC 06 2010

OFFICE OF PETITIONS

In re Application of	:	
Robert M. Trusty et al	:	
Application No. 12/468,462	:	DECISION ON PETITION
Filed: May 19, 2009	:	TO WITHDRAW
Attorney Docket No.: END6397USNP/080219	:	FROM RECORD
	:	

This is a decision on the Request to Withdraw as attorney or agent of record under 37 C.F.R. § 1.36(b), filed November 3, 2010.

The request is **NOT APPROVED**.

A grantable request to withdraw as attorney/agent of record must be signed by every attorney/agent seeking to withdraw or contain a clear indication that one attorney is signing on behalf of another/others.

The request is filed by Daniel R. Miller.

The Office no longer accepts an address change to the new practitioner identified in the request, absent the filing of a power of attorney to the new representative. The Office will, however, change the correspondence address of record to the most current address provided for (1) the intervening assignee of the entire interest or (2) the first named inventor.

The request to withdraw from record cannot be approved at this time, since a current correspondence address was not provided.

All future communications from the Office will continue to be directed to the above-listed address until otherwise notified by applicant.

Telephone inquiries concerning this decision should be directed to undersigned at 571-272-3210. All other inquiries concerning the examination or status of this application should be directed to the Technology Center.

Irvin Dingle
Petitions Examiner
Office of Petitions

UNITED STATES PATENT AND TRADEMARK OFFICE

Commissioner for Patents
United States Patent and Trademark Office
P.O. Box 1450
Alexandria, VA 22313-1450
www.uspto.gov

PATTON BOGGS LLP
2550 M STREET NW
WASHINGTON DC 20037-1350

MAILED
FEB 13 2012
OFFICE OF PETITIONS

In re Application of

Karszes, et al.

Application No. 12/468,497

Filed: May 19, 2009

Attorney Docket No. **026188.0103PTUS**

DECISION ON PETITION

This is a decision on the petition to withdraw the holding of abandonment under 37 CFR 1.181(a), filed January 24, 2012.

The petition is **granted**.

This application was held abandoned November 11, 2011, after no reply was received to the Notice of Allowance and Issue Fee Due mailed August 10, 2011. The notice set forth a non-extendable statutory period of reply of three months from its mailing date. No response was received within the allowable period and the application became abandoned on November 1, 2011. A Notice of Abandonment was mailed November 28, 2011. The instant petition was filed on January 24, 2012. Petitioner maintains that the notice of August 10,2 011, was never received.

When, as in this case petitioner is arguing that an Office communication was not received, petitioner must establish non-receipt of the Office communication in accordance with section 711.03(c) of the *Manual of Patent Examining Procedure* that requires the following:

> To minimize costs and burdens to practitioners and the Office, the Office has modified the showing required to establish nonreceipt of an Office action. The showing required to establish nonreceipt of an Office communication must include a statement from the practitioner describing the system used for recording an Office action received at the correspondence address of record with the USPTO. The statement should establish that the docketing system is sufficiently reliable. It is expected that the record would include, but not be limited to, the application number, attorney docket number, the mail date of the Office action and the due date for the response.
>
> Practitioner must state that the Office action was not received at the correspondence address of record, and that a search of the practitioner's record(s), including any file jacket or the equivalent, and the application contents, indicates that the Office action was not received. A copy of the record(s) used by the practitioner where the non-received Office action would have been entered had it been received is required. A copy of the practitioner's record(s) required to show non-receipt of the Office action should include the master

> docket for the firm. That is, if a three month period for reply was set in the nonreceived Office action, a copy of the master docket report showing all replies docketed for a date three months from the mail date of the nonreceived Office action must be submitted as documentary proof of nonreceipt of the Office action. If no such master docket exists, the practitioner should so state and provide other evidence such as, but not limited to, the following: the application file jacket; incoming mail log; calendar; reminder system; or the individual docket record for the application in question.

Petitioner has met the burden of proof as established by Section 711.03(c)(II) of the MPEP. The holding of abandonment is, therefore, withdrawn.

The issue fee and publication fee were received on January 24, 2012.

The Issue Fee Transmittal was received on January 24, 2012.

The application file is being forwarded to the Office of Data Management for further processing .

Questions concerning this decision should be directed to the undersigned at (571) 272-3222.

/Kenya A. McLaughlin/

Kenya A. McLaughlin
Petitions Attorney
Office of Petitions

UNITED STATES PATENT AND TRADEMARK OFFICE

UNITED STATES DEPARTMENT OF COMMERCE
United States Patent and Trademark Office
Address: COMMISSIONER FOR PATENTS
P.O. Box 1450
Alexandria, Virginia 22313-1450
www.uspto.gov

APPLICATION NO.	FILING DATE	FIRST NAMED INVENTOR	ATTORNEY DOCKET NO.	CONFIRMATION NO.
12/468,543	05/19/2009	Timothy Mackey	099011-1659(CTX-416US)	1139

13860 7590 02/14/2012
Foley & Lardner LLP/Citrix Systems Inc.
111 Huntington Ave.
Boston, MA 02199-7610

EXAMINER
KEEHN, RICHARD G

ART UNIT	PAPER NUMBER
2456	

MAIL DATE	DELIVERY MODE
02/14/2012	PAPER

Please find below and/or attached an Office communication concerning this application or proceeding.

The time period for reply, if any, is set in the attached communication.

UNITED STATES PATENT AND TRADEMARK OFFICE

Commissioner for Patents
United States Patent and Trademark Office
P.O. Box 1450
Alexandria, VA 22313-1450
www.uspto.go

Foley & Lardner LLP/Citrix Systems Inc.
111 Huntington Ave.
Boston MA 02199-7610

In re Application of: MACKEY, T.
Application No.: **12/468,543**
Filed: May 19, 2009
Docket No.: 099011-1659(CTX-416US)
For: SYSTEMS AND METHODS FOR AUTOMATICALLY TESTING AN APPLICATION

DECISION GRANTING PETITION TO WITHDRAW HOLDING OF ABANDONMENT UNDER 35 U.S.C. §1.181

This is a decision on the petition filed on **December 02, 2011** under 37 CFR §1.181 to withdrawn the holding of abandonment of the above-identified application.

The petition is **GRANTED**.

This application was held abandoned for failure to timely file a proper reply to Office Action mailed on May 26, 2011. A Notice of Abandonment has not been mailed.

Petitioner contends that Non-final office action mailed 05/26/11 was not received at the correspondence address of record, thus a request for reconsideration of holding under petition under 37 CFR §1.181(a) without fees has been considered.

In support of the above-mentioned request, Petitioner has provided showing required to establish non-receipt of an Office action. Petitioner's showing required to establish non-receipt of an Office communication must include (i) a statement describing the system used for recording an Office action received at the correspondence address of record with the USPTO; (ii) a statement that the Office action was not received at the correspondence address of record, and that a search of the practitioner's record(s), including any file jacket or the equivalent, and the application contents, indicates that the Office action was not received. A copy of the record(s) used by the practitioner where the non-received Office action would have been entered had it been received enclosed with the petition has been received as required.

Petition is encouraged to review notice of address changed mailed 09/23/11 (hereby enclosed) to ensure the correspondence address of record for instant application is correct.

Non-final office action mailed 05/26/11 is hereby withdrawn and an office communication will follow shortly. Any inquiry regarding this decision should be directed the undersigned whose telephone number is (571) 272-4147.

/Beatriz Prieto/
Beatriz Prieto, WQAS TC2400

UNITED STATES PATENT AND TRADEMARK OFFICE

UNITED STATES DEPARTMENT OF COMMERCE
United States Patent and Trademark Office
Address: COMMISSIONER FOR PATENTS
P.O. Box 1450
Alexandria, Virginia 22313-1450
www.uspto.gov

APPLICATION NUMBER	PATENT NUMBER	GROUP ART UNIT	FILE WRAPPER LOCATION
12/468,543		2456	

OC000000049999302

Correspondence Address/Fee Address Change

The following fields have been set to Customer Number 13860 on 09/22/2011

- **Correspondence Address**
- **Maintenance Fee Address**

The address of record for Customer Number 13860 is:

13860
Foley & Lardner LLP/Citrix Systems Inc.
111 Huntington Ave.
Boston, MA 02199-7610

UNITED STATES PATENT AND TRADEMARK OFFICE

Commissioner for Patents
United States Patent and Trademark Office
P.O. Box 1450
Alexandria, VA 22313-1450

PEPPER HAMILTON LLP
400 BERWYN PARK
899 CASSATT ROAD
BERWYN PA 19312-1183

MAILED
SEP 15 2010
OFFICE OF PETITIONS

Applicant: Gimmestad, et al.
Appl. No.: 12/468,544
Filing Date: May 19, 2009
Title: Mutant Strains of Pseudomonas Fluorescens and Variants Thereof, Methods for Their Production, And Uses Thereof In Alginate Production
Attorney Docket No.: 134542.00111
Pub. No.: US 2009/0226977 A1
Pub. Date: September 10, 2009

This is a decision on the request for a corrected patent application publication under 37 CFR 1.221(b), received on November 10, 2009, for the above-identified application.

The request is granted.

The corrected patent application publication will be published in due course, unless the patent issues before the application is republished.

Any request for republication under 37 CFR 1.221(a), must be submitted via the EFS system, as a "Pre-Grant Publication".

A "Quick Start Guide" for filing a request for a Pre-Grant Publication, such as a request for republication, may be found on the link below:

http://www.uspto.gov/ebc/portal/tutorials.htm

Inquiries relating to this matter may be directed to Mark Polutta at (571) 272-7709.

Mark Polutta
Senior Legal Advisor
Office of Patent Legal Administration
Office of the Deputy Commissioner
for Patent Examination Policy

UNITED STATES PATENT AND TRADEMARK OFFICE

Commissioner for Patents
United States Patent and Trademark Office
P.O. Box 1450
Alexandria, VA 22313-1450
www.uspto.gov

KING & SCHICKLI, PLLC
247 NORTH BROADWAY
LEXINGTON KY 40507

MAILED
DEC 06 2010
OFFICE OF PETITIONS

In re Application of
Adrian DENNEWALD
Application No. 12/468,547
Filed: May 19, 2009
Docket No. 1223-028 DIV

DECISION ON PETITION

This is a decision on the petition under the unintentional provisions of 37 CFR 1.137(b), filed October 26, 2010, to revive the above-identified application.

The petition is **GRANTED**.

The application became abandoned for failure to reply in a timely manner to the non-final Office action mailed, November 5, 2009, which set a shortened statutory period for reply of three (3) months. No extensions of time under the provisions of 37 CFR 1.136(a) were obtained. Accordingly, the application became abandoned on February 6, 2010.

The petition satisfies the requirements of 37 CFR 1.137(b) in that petitioner has supplied (1) the reply in the form of an amendment, (2) the petition fee of $810; and (3) and the required statement of unintentional delay.

There is no indication that the person signing the petition was ever given a power of attorney to prosecute the application. If the person signing the petition desires to receive future correspondence regarding this application, the appropriate power of attorney document must be submitted.

An extension of time under 37 CFR 1.136 must be filed prior to the expiration of the maximum extendable period for reply. *See* In re Application of S., 8 USPQ2d 1630, 1631 (Comm'r Pats. 1988). Since the $555 extension of time fee submitted with the petition on October 26, 2010, was subsequent to the maximum extendable period for reply, this fee is unnecessary and will be credited to Petitioner's Deposit Account No. 11-0978.

Telephone inquiries concerning this decision should be directed to the undersigned at (571) 272-6735.

This application is being referred to Technology Center AU 3673 for appropriate action by the Examiner in the normal course of business.

/Diane C. Goodwyn/
Diane C. Goodwyn
Petitions Examiner
Office of Petitions

UNITED STATES PATENT AND TRADEMARK OFFICE

Commissioner for Patents
United States Patent and Trademark Office
P.O. Box 1450
Alexandria, VA 22313-1450
www.uspto.gov

IMMUNOMEDICS, INC.
300 AMERICAN ROAD
MORRIS PLAINS NJ 07950

MAILED
AUG 22 2011
OFFICE OF PETITIONS

In re Application of

Chang, et al.

Application No. 12/468,589

Filed: May 19, 2009

Attorney Docket No. **IBC119US4**

DECISION ON PETITION

This is a decision on the petition under 37 CFR 1.137(a) filed August 12, 2011. The petition is also being treated as a petition under 37 CFR 1.181(a) to withdraw the holding of abandonment.

The petition under 37 CFR 1.137(a) is **dismissed as moot**.

The petition under 37 CFR 1.181(a) to withdraw the holding of abandonment is **granted**.

This application was held abandoned on January 23, 2011, after no response was filed to a restriction/election requirement mailed December 22, 2010. The notice allowed a shortened period for reply of one month from its mailing date. Extensions of the time set for reply were available pursuant to 37 CFR 1.136(a). A Notice of Abandonment was mailed on August 5, 2011, indicating that a reply to the notice was not received.

When, as in this case petitioner is arguing that an Office communication was not received, petitioner must establish non-receipt of the Office communication in accordance with section 711.03(c) of the *Manual of Patent Examining Procedure* that requires the following:

> To minimize costs and burdens to practitioners and the Office, the Office has modified the showing required to establish nonreceipt of an Office action. The showing required to establish nonreceipt of an Office communication must include a statement from the practitioner describing the system used for recording an Office action received at the correspondence address of record with the USPTO. The statement should establish that the docketing system is sufficiently reliable. It is expected that the record would include, but not be limited to, the application number, attorney docket number, the mail date of the Office action and the due date for the response.
>
> Practitioner must state that the Office action was not received at the correspondence address of record, and that a search of the practitioner's record(s), including any file jacket or the equivalent, and the application contents, indicates that the Office action was not received. A copy of the record(s) used by the practitioner where the non-received Office action would have been entered had it been received is required. A copy of the practitioner's record(s) required to show non-receipt of the Office action should include the master docket for the firm. That is, if a three month period for reply was set in the nonreceived Office action, a copy of the master docket report showing all replies docketed for a date three months from the mail date of the

> nonreceived Office action must be submitted as documentary proof of nonreceipt of the Office action. If no such master docket exists, the practitioner should so state and provide other evidence such as, but not limited to, the following: the application file jacket; incoming mail log; calendar; reminder system; or the individual docket record for the application in question.

Petitioner has met the burden of proof as established by Section 711.03(c)(II) of the MPEP. The holding of abandonment is, therefore, withdrawn.

The petition under 37 CFR 1.137(a) is dismissed as moot because the holding of abandonment is being withdrawn pursuant to 37 CFR 1.181. The petition fee of $270.00 will be refunded, in due course.

The application file is being forwarded to the Technology Center GAU 1644 for further processing that will include consideration of the election filed August 12, 2011.

Further inquires regarding this decision may be directed to the undersigned at (571) 272-3222.

/Kenya A. McLaughlin/

Kenya A. McLaughlin
Petitions Attorney
Office of Petitions

UNITED STATES PATENT AND TRADEMARK OFFICE

Commissioner for Patents
United States Patent and Trademark Office
P.O. Box 1450
Alexandria, VA 22313-1450
www.uspto.gov

MAILED
MAR 13 2012
OFFICE OF PETITIONS

CROWELL & MORING LLP
INTELLECTUAL PROPERTY GROUP
P.O. BOX 14300
WASHINGTON DC 20044-4300

In re Application of	
Takanobu Ichihara et al	**: DECISION ON REQUEST TO**
Application No.: 12/468,611	**: PARTICIPATE IN THE PATENT**
Filed: May 19, 2009	**: PROSECUTION HIGHWAY**
Attorney Docket No.: 011050.61601US	**: PROGRAM AND PETITION**
For: CONTROL APPARATUS FOR	**: TO MAKE SPECIAL UNDER**
MULTI-CYLINDER INTERNAL	**: 37 CFR 1.102(a)**
COMBUSTION ENGINE	

This is a decision on the request to participate in the Patent Prosecution Highway (PPH) program and the petition under 37 CFR 1.102(a), filed February 7, 2012, to make the above-identified application special.

The request and petition are **GRANTED**.

DISCUSSION

A grantable request to participate in the PPH pilot program and petition to make special require:

1. The U.S. application is

    a. a Paris Convention application which either
        i. validly claims priority under 35 U.S.C. 119(a) and 37 CFR 1.55 to one or more applications filed in the JPO, or
        ii. validly claims priority to a PCT application that contains no priority claims, or

    b. a national stage application under the PCT (an application which entered the national stage in the U.S. from a PCT international application after compliance with 35 U.S.C. 371), which PCT application
        i. validly claims priority to an application filed in the JPO, or
        ii. validly claims priority to a PCT application that contains no priority claims, or
        iii. contains no priority claim, or

c. a so-called bypass application filed under 35 U.S.C. 111(a) which validly claims benefit under 35 U.S.C. 120 to a PCT application, which PCT application
   i. validly claims priority to an application filed in the JPO, or
   ii. validly claims priority to a PCT application that contains no priority claims, or
   iii. contains no priority claim;

2. Applicant must:
   a. Ensure all the claims in the U.S. application must sufficiently correspond or be amended to sufficiently correspond to the allowable/patentable claim(s) in the JPO application(s) and
   b. Submit a claims correspondence table in English;
3. Examination of the U.S. application has not begun;
4. Applicant must submit:
   a. Documentation of prior office action:
      i. a copy of the office action(s) just prior to the "Decision to Grant a Patent" from each of the JPO application(s) containing the allowable/patentable claim(s) or
      ii. if the allowable/patentable claims(s) are from a "Notification of Reasons for Refusal" then the Notification of Reasons for Refusal or
      iii. if the JPO application is a first action allowance then no office action from the JPO is necessary should be indicated on the request/petition form;
   b. An English language translation of the JPO Office action from (5)(a)(i)-(ii) above
5. Applicant must submit:
   a. An IDS listing the documents cited by the JPO examiner in the JPO office action (unless already submitted in this application)
   b. Copies of the documents except U.S. patents or U.S. patent application publications (unless already submitted in this application);

The request to participate in the PPH pilot program and petition comply with the above requirements. Accordingly, the above-identified application has been accorded "special" status.

Telephone inquiries concerning this decision should be directed to Irvin Dingle at (571) 272-3210.

All other inquiries concerning the examination or status of the application is accessible in the PAIR system at http://www.uspto.gov/ebc.index.html.

This application will be forwarded to the examiner for action on the merits commensurate with this decision once this application's formality reviews have been completed.

David Bucci
Petitions Examiner
Office of Petitions

PTO/SB/20PCT-FI (01-11)
Approved for use through 01/31/2012. OMB 0651-0058
U.S. Patent and Trademark Office; U. S. DEPARTMENT OF COMMERCE
Under the Paperwork Reduction Act of 1995, no persons are required to respond to a collection of information unless it displays a valid OMB control number.

REQUEST FOR PARTICIPATION IN THE PATENT COOPERATION TREATY - PATENT PROSECUTION HIGHWAY (PCT-PPH) PILOT PROGRAM BETWEEN THE NATIONAL BOARD OF PATENTS AND REGISTRATION OF FINLAND (NBPR) AND THE USPTO

Application No:	12/468,663	Filing date:	May 19, 2009
First Named Inventor:	Bonny P. Lau		
Title of the Invention:	Summary Tasks for Top-Down Project Planning		

THIS REQUEST FOR PARTICIPATION IN THE PCT-PPH PILOT PROGRAM ALONG WITH THE REQUIRED DOCUMENTS MUST BE SUBMITTED VIA EFS-WEB. INFORMATION REGARDING EFS-WEB IS AVAILABLE AT HTTP://WWW.USPTO.GOV/EBC/EFS_HELP.HTML

APPLICANT HEREBY REQUESTS PARTICIPATION IN THE PCT-PPH PROGRAM AND PETITIONS TO MAKE THE ABOVE-IDENTIFIED APPLICATION SPECIAL UNDER THE PCT-PPH PROGRAM.

The above-identified application is (1) a national stage entry of the corresponding PCT application, or (2) a national stage entry of another PCT application which claims priority to the corresponding PCT application, or (3) a national application that claims domestic/ foreign priority to the corresponding PCT application, or (4) a national application which forms the basis for the priority claim in the corresponding PCT application, or (5) a continuing application of a U.S. application that satisfies one of (1) to (4) above, or (6) a U.S. application that claims domestic benefit to a U.S. provisional application which forms the basis for the priority claim in the corresponding PCT application.

The corresponding PCT application number(s) is/are: PCT/US10/34618

The international filing date of the corresponding PCT application(s) is/are: May 12, 2010

I. List of Required Documents:

a. **A copy of the latest international work product (WO/ISA, WO/IPEA, or IPER) in the above–identified corresponding PCT application(s)**

- [x] Is attached.
- [ ] Is not attached because the document is already in the U.S. application.

b. **A copy of all claims which were indicated as having novelty, inventive step and industrial applicability in the above-identified corresponding PCT application(s).**

- [x] Is attached.
- [ ] Is not attached because the document is already in the U.S. application.

c. **English translations of the documents in a. and b. above are attached (if the documents are not in the English language). A statement that the English translation is accurate is attached for the document in b. above.**

This collection of information is required by 35 U.S.C. 119, 37 CFR 1.55, and 37 CFR 1.102(d). The information is required to obtain or retain a benefit by the public, which is to file (and by the USPTO to process) an application. Confidentiality is governed by 35 U.S.C. 122 and 37 CFR 1.11 and 1.14. This collection is estimated to take 2 hours to complete, including gathering, preparing, and submitting the completed application form to the USPTO. Time will vary depending upon the individual case. Any comments on the amount of time you require to complete this form and/or suggestions for reducing this burden should be sent to the Chief Information Officer, U.S. Patent and Trademark Office, U.S. Department of Commerce, P.O. Box 1450, Alexandria, VA 22313-1450. DO NOT SEND FEES OR COMPLETED FORMS TO THIS ADDRESS.

Approved for use through 01/31/2012. OMB 0651-0058
U.S.Patent and Trademark Office; U.S. DEPARTMENT OF COMMERCE
Under the Paperwork Reduction Act of 1995, no persons are required to respond to a collection of information unless it displays a valid OMB control number.

REQUEST FOR PARTICIPATION IN THE PCT-PPH PILOT PROGRAM BETWEEN THE NBPR AND THE USPTO

(continued)

Application No.:	12/468,663
First Named Inventor:	Bonny P. Lau

d. **(1) An information disclosure statement listing the documents cited in the international work products (ISR, WO/ISA, WO/IPEA, IPER) of the corresponding PCT application.**

☐ Is attached

☑ Has already been filed in the above-identified U.S. application on April 11, 2011

(2) Copies of all documents (except) for U.S. patents or U.S. patent application publications)

☑ Are attached.

☐ Have already been filed in the above-identified U.S. application on _____

II. Claims Correspondence Table:

Claims in US Application	Patentable Claims in the corresponding PCT Application	Explanation regarding the correspondence
1-12	1-12	Claims are sufficiently identical except for numerical references that refer to the drawings in the PCT application
13-14	13	US claims 13 and 14 are combined in corresponding PCT claim 13, which is sufficiently identical.
15	14	Claims are sufficiently identical except for numerical references that refer to the drawings in the PCT application
16-19	15	US claims 16, 17, and 19 combined in corresponding PCT claim 15, which is sufficiently identical.
20	N/A	Claim canceled in preliminary amendment filed 4/29/11

III. All the claims in the US application sufficiently correspond to the patentable claims in the corresponding PCT application.

Signature /Damon A. Rieth/	Date April 29, 2011
Name (Print/Typed) Damon A. Rieth	Registration Number 52,167

Privacy Act Statement

The **Privacy Act of 1974 (P.L. 93-579)** requires that you be given certain information in connection with your submission of the attached form related to a patent application or patent. Accordingly, pursuant to the requirements of the Act, please be advised that: (1) the general authority for the collection of this information is 35 U.S.C. 2(b)(2); (2) furnishing of the information solicited is voluntary; and (3) the principal purpose for which the information is used by the U.S. Patent and Trademark Office is to process and/or examine your submission related to a patent application or patent. If you do not furnish the requested information, the U.S. Patent and Trademark Office may not be able to process and/or examine your submission, which may result in termination of proceedings or abandonment of the application or expiration of the patent.

The information provided by you in this form will be subject to the following routine uses:

1. The information on this form will be treated confidentially to the extent allowed under the Freedom of Information Act (5 U.S.C. 552) and the Privacy Act (5 U.S.C 552a). Records from this system of records may be disclosed to the Department of Justice to determine whether disclosure of these records is required by the Freedom of Information Act.
2. A record from this system of records may be disclosed, as a routine use, in the course of presenting evidence to a court, magistrate, or administrative tribunal, including disclosures to opposing counsel in the course of settlement negotiations.
3. A record in this system of records may be disclosed, as a routine use, to a Member of Congress submitting a request involving an individual, to whom the record pertains, when the individual has requested assistance from the Member with respect to the subject matter of the record.
4. A record in this system of records may be disclosed, as a routine use, to a contractor of the Agency having need for the information in order to perform a contract. Recipients of information shall be required to comply with the requirements of the Privacy Act of 1974, as amended, pursuant to 5 U.S.C. 552a(m).
5. A record related to an International Application filed under the Patent Cooperation Treaty in this system of records may be disclosed, as a routine use, to the International Bureau of the World Intellectual Property Organization, pursuant to the Patent Cooperation Treaty.
6. A record in this system of records may be disclosed, as a routine use, to another federal agency for purposes of National Security review (35 U.S.C. 181) and for review pursuant to the Atomic Energy Act (42 U.S.C. 218(c)).
7. A record from this system of records may be disclosed, as a routine use, to the Administrator, General Services, or his/her designee, during an inspection of records conducted by GSA as part of that agency's responsibility to recommend improvements in records management practices and programs, under authority of 44 U.S.C. 2904 and 2906. Such disclosure shall be made in accordance with the GSA regulations governing inspection of records for this purpose, and any other relevant (*i.e.*, GSA or Commerce) directive. Such disclosure shall not be used to make determinations about individuals.
8. A record from this system of records may be disclosed, as a routine use, to the public after either publication of the application pursuant to 35 U.S.C. 122(b) or issuance of a patent pursuant to 35 U.S.C. 151. Further, a record may be disclosed, subject to the limitations of 37 CFR 1.14, as a routine use, to the public if the record was filed in an application which became abandoned or in which the proceedings were terminated and which application is referenced by either a published application, an application open to public inspection or an issued patent.
9. A record from this system of records may be disclosed, as a routine use, to a Federal, State, or local law enforcement agency, if the USPTO becomes aware of a violation or potential violation of law or regulation.

UNITED STATES PATENT AND TRADEMARK OFFICE

Commissioner for Patents
United States Patent and Trademark Office
P.O. Box 1450
Alexandria, VA 22313-1450
www.uspto.gov

MERCHANT & GOULD (MICROSOFT)
P.O. BOX 2903
MINNEAPOLIS MN 55402-0903

MAILED
JAN 06 2012
OFFICE OF PETITIONS

In re Application of
LAU ET AL.
Application No.: 12/468,663
Filed: May 19, 2009
Attorney Docket No.:
14917.1278US01/326950.01
For: Summary Tasks for Top-Down Project Planning

: DECISION ON REQUEST TO
: PARTICIPATE IN THE PATENT
: PROSECUTION HIGHWAY
: PROGRAM AND PETITION
: TO MAKE SPECIAL UNDER
: 37 CFR 1.102(a)

This is a decision on the request to participate in the PCT Patent Prosecution Highway (PCT-PPH) pilot program and the petition under 37 CFR 1.102(a), filed on April 29, 2011, to make the above-identified application special.

The request and petition are **DENIED**.

Discussion

A grantable request to participate in the PCT-PPH pilot program and petition to make special require:

(1) The U.S. application must have an eligible relationship to one or more PCT applications where the ISA or IPEA are the JPO, EPO, KIPO, IPAU, Russia, Spain, Finland, Austria, or USPTO;

(2) At least one claim in the PCT application has novelty, inventive step, and industrial applicability and must be free of any observations in Box VIII in the latest work product in the international stage or applicant must identify and explain why the claim(s) is/are not subject to the observation in Box VIII;

(3) Applicant must submit a copy of the claim(s) from the PCT application(s) that have novelty, inventive step, and industrial applicability along with an English translation thereof and a statement that the English translation is accurate, if the claims are not in the English language;

(4) All the claims in the U.S. application must sufficiently correspond or be amended to sufficiently correspond to the claim(s) that have novelty, inventive step, and industrial applicability in the PCT application(s);

(5) Examination of the U.S. application has not begun;

(6) Applicant must submit a copy of the latest international work product from the PCT application indicating that the claim(s) have novelty, inventive step, and industrial applicability along with an English translation thereof.

(7) Applicant must submit an IDS listing the documents cited by the PCT examiner in the international work product along with copies of documents except U.S. patents or U.S. patent application publications.

(8) Applicant is required to submit a claims correspondence table in English which indicates how all the claims in the U.S. application correspond to the claims indicated as having novelty, inventive step and industrial applicability in the latest international work product.

The request to participate in the PPH pilot program and petition fails to meet condition (5).

Regarding requirement (5), a non-final office action was mailed on September 20, 2011. As such the examination of this application has begun.

Telephone inquiries concerning this decision should be directed to Kimberly Inabinet at 571-272-4618.

All other inquiries concerning the examination or status of the application is accessible in the PAIR system at http://www.uspto.gov/ebc/index.html.

Anthony Knight
Director
Office of Petitions

PTO/SB/20PCT-KR (06-10)
Approved for use through 01/31/2012. OMB 0651-0058
U.S. Patent and Trademark Office; U. S. DEPARTMENT OF COMMERCE
Under the Paperwork Reduction Act of 1995, no persons are required to respond to a collection of information unless it displays a valid OMB control number.

REQUEST FOR PARTICIPATION IN THE PATENT COOPERATION TREATY - PATENT PROSECUTION HIGHWAY (PCT-PPH) PILOT PROGRAM BETWEEN THE KOREAN INTELLECTUAL PROPERTY OFFICE (KIPO) AND THE USPTO

Application No:	12/468,736	Filing date:	May 19, 2009
First Named Inventor:	Qiang Liu		
Title of the Invention:	HIGH PRESSURE STORAGE DEVICE AND METHOD		

THIS REQUEST FOR PARTICIPATION IN THE PCT-PPH PILOT PROGRAM ALONG WITH THE REQUIRED DOCUMENTS MUST BE SUBMITTED VIA EFS-WEB. INFORMATION REGARDING EFS-WEB IS AVAILABLE AT HTTP://WWW.USPTO.GOV/EBC/EFS_HELP.HTML

APPLICANT HEREBY REQUESTS PARTICIPATION IN THE PCT-PPH PROGRAM AND PETITIONS TO MAKE THE ABOVE-IDENTIFIED APPLICATION SPECIAL UNDER THE PCT-PPH PROGRAM.

The above-identified application is (1) a national stage entry of the corresponding PCT application, or (2) a national stage entry of another PCT application which claims priority to the corresponding PCT application, or (3) a national application that claims domestic/ foreign priority to the corresponding PCT application, or (4) a national application which forms the basis for the priority claim in the corresponding PCT application, or (5) a continuing application of a U.S. application that satisfies one of (1) to (4) above, or (6) a U.S. application that claims domestic benefit to a U.S. provisional application which forms the basis for the priority claim in the corresponding PCT application.

The corresponding PCT application number(s) is/are: PCT/US2010/034791

The international date of the corresponding PCT application(s) is/are: 13 May 2010 (13.05.2010)

I. List of Required Documents:

a. **A copy of the latest international work product (WO/ISA, WO/IPEA, or IPER) in the above–identified corresponding PCT application(s)**

[X] Is attached.

[ ] Is not attached because the document is already in the U.S. application.

b. **A copy of all claims which were indicated as having novelty, inventive step and industrial applicability in the above-identified corresponding PCT application(s).**

[X] Is attached.

[ ] Is not attached because the document is already in the U.S. application.

c. **English translations of the documents in a. and b. above are attached (if the documents are not in the English language). A statement that the English translation is accurate is attached for the document in b. above.**

This collection of information is required by 35 U.S.C. 119, 37 CFR 1.55, and 37 CFR 1.102(d). The information is required to obtain or retain a benefit by the public, which is to file (and by the USPTO to process) an application. Confidentiality is governed by 35 U.S.C. 122 and 37 CFR 1.11 and 1.14. This collection is estimated to take 2 hours to complete, including gathering, preparing, and submitting the completed application form to the USPTO. Time will vary depending upon the individual case. Any comments on the amount of time you require to complete this form and/or suggestions for reducing this burden should be sent to the Chief Information Officer, U.S. Patent and Trademark Office, U.S. Department of Commerce, P.O. Box 1450, Alexandria, VA 22313-1450. DO NOT SEND FEES OR COMPLETED FORMS TO THIS ADDRESS.

Approved for use through 01/31/2012. OMB 0651-0058
U.S.Patent and Trademark Office; U.S. DEPARTMENT OF COMMERCE
Under the Paperwork Reduction Act of 1995, no persons are required to respond to a collection of information unless it displays a valid OMB control number.

REQUEST FOR PARTICIPATION IN THE PCT-PPH PILOT PROGRAM BETWEEN THE KIPO AND THE USPTO

(continued)

Application No.:	12/468,736
First Named Inventor:	Qiang Liu

d. **(1) An information disclosure statement listing the documents cited in the international work products (ISR, WO/ISA, WO/IPEA, IPER) of the corresponding PCT application.**

[X] Is attached

[ ] Has already been filed in the above-identified U.S. application on _____

(2) Copies of all documents (except) for U.S. patents or U.S. patent application publications)

[X] Are attached.

Have already been filed in the above-identified U.S. application on _____

II. Claims Correspondence Table:

Claims in US Application	Patentable Claims in the corresponding PCT Application	Explanation regarding the correspondence
1-20	1-20	Identical

III. All the claims in the US application sufficiently correspond to the patentable claims in the corresponding PCT application.

Signature		Date	October 20, 2010
Name (Print/Typed)	Mark H. Krietzman	Registration Number	41,128

Privacy Act Statement

The **Privacy Act of 1974 (P.L. 93-579)** requires that you be given certain information in connection with your submission of the attached form related to a patent application or patent. Accordingly, pursuant to the requirements of the Act, please be advised that: (1) the general authority for the collection of this information is 35 U.S.C. 2(b)(2); (2) furnishing of the information solicited is voluntary; and (3) the principal purpose for which the information is used by the U.S. Patent and Trademark Office is to process and/or examine your submission related to a patent application or patent. If you do not furnish the requested information, the U.S. Patent and Trademark Office may not be able to process and/or examine your submission, which may result in termination of proceedings or abandonment of the application or expiration of the patent.

The information provided by you in this form will be subject to the following routine uses:

1. The information on this form will be treated confidentially to the extent allowed under the Freedom of Information Act (5 U.S.C. 552) and the Privacy Act (5 U.S.C 552a). Records from this system of records may be disclosed to the Department of Justice to determine whether disclosure of these records is required by the Freedom of Information Act.
2. A record from this system of records may be disclosed, as a routine use, in the course of presenting evidence to a court, magistrate, or administrative tribunal, including disclosures to opposing counsel in the course of settlement negotiations.
3. A record in this system of records may be disclosed, as a routine use, to a Member of Congress submitting a request involving an individual, to whom the record pertains, when the individual has requested assistance from the Member with respect to the subject matter of the record.
4. A record in this system of records may be disclosed, as a routine use, to a contractor of the Agency having need for the information in order to perform a contract. Recipients of information shall be required to comply with the requirements of the Privacy Act of 1974, as amended, pursuant to 5 U.S.C. 552a(m).
5. A record related to an International Application filed under the Patent Cooperation Treaty in this system of records may be disclosed, as a routine use, to the International Bureau of the World Intellectual Property Organization, pursuant to the Patent Cooperation Treaty.
6. A record in this system of records may be disclosed, as a routine use, to another federal agency for purposes of National Security review (35 U.S.C. 181) and for review pursuant to the Atomic Energy Act (42 U.S.C. 218(c)).
7. A record from this system of records may be disclosed, as a routine use, to the Administrator, General Services, or his/her designee, during an inspection of records conducted by GSA as part of that agency's responsibility to recommend improvements in records management practices and programs, under authority of 44 U.S.C. 2904 and 2906. Such disclosure shall be made in accordance with the GSA regulations governing inspection of records for this purpose, and any other relevant (*i.e.*, GSA or Commerce) directive. Such disclosure shall not be used to make determinations about individuals.
8. A record from this system of records may be disclosed, as a routine use, to the public after either publication of the application pursuant to 35 U.S.C. 122(b) or issuance of a patent pursuant to 35 U.S.C. 151. Further, a record may be disclosed, subject to the limitations of 37 CFR 1.14, as a routine use, to the public if the record was filed in an application which became abandoned or in which the proceedings were terminated and which application is referenced by either a published application, an application open to public inspection or an issued patent.
9. A record from this system of records may be disclosed, as a routine use, to a Federal, State, or local law enforcement agency, if the USPTO becomes aware of a violation or potential violation of law or regulation.

UNITED STATES PATENT AND TRADEMARK OFFICE

UNITED STATES DEPARTMENT OF COMMERCE
United States Patent and Trademark Office
Address: COMMISSIONER FOR PATENTS
P.O. Box 1450
Alexandria, Virginia 22313-1450
www.uspto.gov

APPLICATION NO.	FILING DATE	FIRST NAMED INVENTOR	ATTORNEY DOCKET NO.	CONFIRMATION NO.
12/468,736	05/19/2009	Qiang Liu	38023-20200	1471

86451 7590 10/21/2010
Luce, Forward, Hamilton & Scripps LLP
2050 Main Street, Suite 600
Irvine, CA 92614

EXAMINER
WALKER, NED ANDREW

ART UNIT	PAPER NUMBER
3781	

MAIL DATE	DELIVERY MODE
10/21/2010	PAPER

Please find below and/or attached an Office communication concerning this application or proceeding.

The time period for reply, if any, is set in the attached communication.

UNITED STATES PATENT AND TRADEMARK OFFICE

Commissioner for Patents
United States Patent and Trademark Office
P.O. Box 1450
Alexandria, VA 22313-1450
www.uspto.gov

Luce, Forward, Hamilton & Scripps LLP
2050 Main Street, Suite 600
Irvine CA 92614

In re Application of	:	
LIU, QIANG	:	DECISION ON REQUEST TO
Application No. 12/468,736	:	PARTICIPATE IN PATENT
Filed: May 15, 2009	:	PCT/PROSECUTION HIGHWAY
Attorney Docket No. 38023-20200	:	PROGRAM AND PETITION
Title: HIGH PRESSURE STORAGE DEVICE AND METHOD	:	37 CFR 1.102(d)

This is a decision on the renewed request to participate in the Patent Prosecution Highway (PPH) program and the petition under 37 CFR 1.102(d), filed October 20, 2010, to make the above-identified application special.

The request and petition are granted.

A grantable request to participate in the PPH program and petition to make special require:
(1) The U.S. application must disclose an eligible relationship to one or more PCT applications filed in the KIPO, JPO, EPO or USPTO;
(2) Applicant must submit a copy of the allowable/patentable claim(s) from the PCT application(s) latest international work product (the written opinion or the IPER) along with an English translation thereof and a statement that the English translation is accurate;
(3) All the claims in the U.S. application must sufficiently correspond or be amended to sufficiently correspond to the allowable/patentable claim(s) in the PCT application(s);
(4) Examination of the U.S. application has not begun;
(5) Applicant must submit a copy of the latest international work product from the PCT application containing the allowable/patentable claim(s) along with an English translation thereof and a statement that the English translation is accurate; and
(6) Applicant must submit an IDS listing the documents cited by the PCT examiner in the international work product along with copies of documents except U.S. patents or U.S. patent application publications.

In light of the petition being properly submitted, the request to participate in the PPH program and the petition comply with the above requirements. Accordingly, the above-identified application has been accorded "special" status.

The applicant is encouraged to cite and submit all relevant prior art references, if any, to facilitate examination in this application.

Other inquiries concerning the examination or status of the application should be directed to Anthony Stashick, the SPE of Art Unit 3781 and 571-272-4561 for Class 220/562 and also accessible in the PAIR system at http://www.uspto.gov/ebc.index.html.

All other inquiries concerning the examination or status of the application should be directed to the Patent Application Information Retrieval (PAIR) system.

This application will be docketed to an examiner for action on the merits commensurate with this decision.

Telephone inquiries concerning this decision should be directed to Henry C. Yuen, at 571-272-4856.

The petition is **granted.**

/Henry C. Yuen/

Henry C. Yuen, Special Programs Examiner
Technology Center 3700 – Mechanical Engineering,
Manufacturing and Products
571-272-4856

UNITED STATES PATENT AND TRADEMARK OFFICE

Commissioner for Patents
United States Patent and Trademark Office
P.O. Box 1450
Alexandria, VA 22313-1450
www.uspto.gov

Mark H. Krietzman
c/o The Eclipse Group
Suite 150
1920 Main Street
Irvine CA 92614

MAILED

MAR 28 2011

OFFICE OF PETITIONS

In re Application of	:	
Qiang Liu	:	DECISION ON PETITION
Application No. 12/468,736	:	TO WITHDRAW
Filed: May 19, 2009	:	FROM RECORD
Attorney Docket No. **38023-20200**	:	

This is a decision on the request to withdraw as attorney of record under 37 CFR § 1.36(b), filed February 15, 2011.

The request is **NOT APPROVED**.

The request cannot be approved because it lacks the name of the first inventor or the assignee of record that is associated with the address listed in the request. Therefore, the change of correspondence address is considered improper.

The Office will only accept correspondence address changes to the most current address information provided for the assignee of the entire interest *who properly became of record under 37 CFR 3.71,* or, if no assignee of the entire interest has properly been made of record, the most current address information provided for the first named inventor. 37 CFR 3.71(c) states:

> *An assignee becomes of record either in a national patent application or a reexamination proceeding by filing a statement in compliance with § 3.73(b) that is signed by a party who is authorized to act on behalf of the assignee.*

The assignee must establish its ownership of the patent to the satisfaction of the Director. In this regard, the statement under 37 CFR 3.73(b) must have either: (i) documentary evidence of a chain of title from the original owner to the assignee (*e.g.*, copy of an executed assignment), and a statement affirming that the documentary evidence of the chain of title from the original owner to the assignee was or concurrently is being submitted for recordation pursuant to § 3.11; or (ii) a statement specifying where documentary evidence of a chain of title from the original owner to the assignee is recorded in the assignment records of the Office (*e.g.*, reel and frame number).

A courtesy copy of this decision is being mailed to the address on the request. However, all future communications from the Office will continue to be directed to the above-listed address until otherwise notified by applicant.

Telephone inquires concerning this decision should be directed to the undersigned at (571) 272-4584.

/JoAnne Burke/
JoAnne Burke
Petitions Examiner
Office of Petitions

cc: Marlan D. Walker
2050 Main Street, Suite 600
Irvine, CA 92614

UNITED STATES PATENT AND TRADEMARK OFFICE

Commissioner for Patents
United States Patent and Trademark Office
P.O. Box 1450
Alexandria, VA 22313-1450
www.uspto.gov

BAINWOOD HUANG
& ASSOCIATES LLC
2 CONNECTOR ROAD
WESTBOROUGH MA 01581

MAILED

AUG 24 2010

OFFICE OF PETITIONS

In re Application of	:	
Childs	:	
Application No. 12/468,868	:	DECISION
Filed/Deposited: 20 May, 2009	:	
Attorney Docket No. 1062-003	:	

This is a decision on the petition filed on 29 June, 2010, to revive an application under 37 C.F.R. §1.137(b) as having been abandoned due to unintentional delay.

The petition under 37 C.F.R. §1.137(b) is **GRANTED**.

As to the Allegations
of Unintentional Delay

The requirements of a grantable petition pursuant to 37 C.F.R. §1.137(b) are the petition and fee therefor, a reply, a proper statement and/or showing of unintentional delay under the regulation, and, where applicable, a terminal disclaimer and fee.

BACKGROUND

The record reflects as follows:

Applicant failed to reply timely and properly to the Notice of Missing Parts mailed on 29 May, 2009, with reply due absent extension of time on or before 29 July, 2009—and after Petitioner's reply on 27 July, 2009, the Office mailed a Notice of Incomplete Reply, with reply remaining due absent extension of time on or before 29 July, 2009.

Applicant filed a reply on 8 September, 2009, but with a request and fee for an insufficient period of time.

The application went abandoned by operation of law after midnight 29 August, 2009.

The Office mailed a Notice of Abandonment on 16 April, 2010.

On 29 June, 2010, Petitioner/Counsel filed, *inter alia*, revocation/power of attorney (with certificate pursuant to 37 C.F.R. §3.73(b)), a petition (with fee) pursuant to 37 C.F.R. §1.137(b), averring unintentional delay, with reply in the form of fees and drawings due, and made the statement of unintentional delay.

The availability of applications and application papers online to applicants/practitioners who diligently associate their Customer Number with the respective application(s) now provides an applicant/practitioner on-demand information as to events/transactions in an application.

Out of an abundance of caution, Petitioners always are reminded that those registered to practice and all others who make representations before the Office **must** inquire into the underlying facts of representations made to the Office and support averments with the appropriate documentation–since all owe to the Office the continuing duty to disclose.[1]

STATUTES, REGULATIONS AND ANALYSIS

Congress has authorized the Commissioner to "revive an application if the delay is shown to the satisfaction of the Commissioner to have been "unavoidable." 35 U.S.C. §133 (1994).[2]
The regulations at 37 C.F.R. §1.137(a) and (b) set forth the requirements for a Petitioner to revive a previously unavoidably or unintentionally, respectively, abandoned application under this congressional grant of authority.

Unintentional delays are those that do not satisfy the very strict statutory and regulatory requirements of unavoidable delay, and also, by definition, are not intentional.[3]))

---

[1] See supplement of 17 June, 1999. The Patent and Trademark Office is relying on petitioner's duty of candor and good faith and accepting a statement made by Petitioner. See Changes to Patent Practice and Procedure, 62 Fed. Reg. at 53160 and 53178, 1203 Off. Gaz. Pat. Office at 88 and 103 (responses to comments 64 and 109)(applicant obligated under 37 C.F.R. §10.18 to inquire into the underlying facts and circumstances when providing statements to the Patent and Trademark Office).

[2] 35 U.S.C. §133 provides:

35 U.S.C. §133 Time for prosecuting application.
Upon failure of the applicant to prosecute the application within six months after any action therein, of which notice has been given or mailed to the applicant, or within such shorter time, not less than thirty days, as fixed by the Commissioner in such action, the application shall be regarded as abandoned by the parties thereto, unless it be shown to the satisfaction of the Commissioner that such delay was unavoidable.

[3] Therefore, by example, an unintentional delay in the reply might occur if the reply and transmittal form are to be prepared for shipment by the US Postal Service, but other pressing matters distract one's attention and the mail is not timely deposited for shipment.

As to Allegations of
Unintentional Delay

The requirements of a grantable petition pursuant to 37 C.F.R. §1.137(b) are the petition and fee therefor, a reply, a proper statement of unintentional delay under the regulation, and, where applicable, a terminal disclaimer and fee.

It appears that the requirements under the rule have been satisfied.

CONCLUSION

Accordingly, the petition pursuant to 37 C.F.R. §1.137(b) is **granted**.

The instant application is released to the Office of Patent Application Processing (OPAP) in due course.

Petitioner may find it beneficial to view Private PAIR within a fortnight of the instant decision to ensure that the revival has been acknowledged by the OPAP in response to this decision. It is noted that all inquiries with regard to status need be directed to the OPAP where that change of status must be effected—that does not occur in the Office of Petitions.

Telephone inquiries regarding this decision may be directed to the undersigned at (571) 272-3214—it is noted, however, that all practice before the Office is in writing (see: 37 C.F.R. §1.2[4]) and the proper authority for action on any matter in this regard are the statutes (35 U.S.C.), regulations (37 C.F.R.) and the commentary on policy (MPEP). Therefore, no telephone discussion may be controlling or considered authority for Petitioner's action(s).

/John J. Gillon, Jr./
John J. Gillon, Jr.
Senior Attorney
Office of Petitions

[4] The regulations at 37 C.F.R. §1.2 provide:
§1.2 Business to be transacted in writing.
All business with the Patent and Trademark Office should be transacted in writing. The personal attendance of applicants or their attorneys or agents at the Patent and Trademark Office is unnecessary. The action of the Patent and Trademark Office will be based exclusively on the written record in the Office. No attention will be paid to any alleged oral promise, stipulation, or understanding in relation to which there is disagreement or doubt.

UNITED STATES PATENT AND TRADEMARK OFFICE

Commissioner for Patents
United States Patent and Trademark Office
P.O. Box 1450
Alexandria, VA 22313-1450
www.uspto.gov

LADAS & PARRY LLP
1040 Avenue of the Americas
NEW YORK NY 10018-3738

MAILED
MAR 22 2012
OFFICE OF PETITIONS

In re Application of
De Graaf, et al.
Application No. 12/468,878
Filed: May 20, 2009
Atty. Dkt. No.: U 017731-0

: DECISION ON PETITION

This decision is in response to the petition under 37 CFR 1.137(b), filed February 28, 2012.

The application became abandoned November 26, 2011 for failure to timely submit a proper reply to the non-final Office action mailed May 25, 2011. This decision precedes Notice of Abandonment.

A grantable petition pursuant to 37 C.F.R. § 1.137(b) must be accompanied by: (1) the required reply to the outstanding Office action or notice, unless previously filed; (2) the petition fee as set forth in 37 C.F.R. § 1.17(m); (3) a statement that the entire delay in filing the required reply from the due date for the reply until the filing of a grantable petition pursuant to 37 C.F.R. § 1.137(b) was unintentional; and (4) any terminal disclaimer (and fee set forth in 37 C.F.R. § 1.20(d)) required pursuant to 37 C.F.R. § 1.137(c).

Please be advised that the request for continued examination filed February 28, 2012 is not a proper reply to the non-final Office action mailed May 25, 2011. However, the amendment accompanying the petition is an appropriate reply to the non-final Office action. In view thereof, the instant petition is found in compliance with the requirements set forth above.

Accordingly, the petition under 37CFR 1.137(b) is hereby **GRANTED**.

This application is being forwarded to Group Art Unit 1747 for further processing.

Telephone inquiries concerning this decision should be directed to the undersigned at (571) 272-3205.

/ALESIA M. BROWN/

Alesia M. Brown
Attorney Advisor
Office of Petitions

UNITED STATES PATENT AND TRADEMARK OFFICE

Commissioner for Patents
United States Patent and Trademark Office
P.O. Box 1450
Alexandria, VA 22313-1450
www.uspto.gov

HAYNES AND BOONE, LLP
IP SECTION
2323 VICTORY AVENUE
SUITE 700
DALLAS TX 75219

MAILED
SEP 09 2011
OFFICE OF PETITIONS

In re Application of	:	
Upadhyay et al.	:	
Application No. 12/468,895	:	DECISION ON PETITION
Filed: May 20, 2009	:	
Attorney Docket No. VDP-004 US (45657.6)	:	

This is a decision on the petitions under 37 CFR 1.181, requesting withdrawal of the holding of abandonment and under the unintentional provisions of 37 CFR 1.137(b), filed July 14, 2011 in the above-identified application.

The above-identified application became abandoned for failure to reply in a proper and timely manner to the Notice to File Corrected Application Papers (Notice) mailed June 4, 2009, and the Notice of Incomplete Reply (Nonprovisional) mailed September 4, 2009. The original Notice set a period for reply of two (2) months from the mail date of the Notice. A one-month extension of time under the provisions of 37 CFR 1.136(a) was timely obtained. Accordingly, the above-identified application became abandoned on September 8, 2009. A Notice of Abandonment was mailed on June 18, 2010.

The petition under 37 CFR 1.181 is **DISMISSED**.

Petitioner asserts that "At the time of submission, Applicants believed that the Second Reply was covered by the previous Petition for Extension of Time."

However, the excess extension of time fee paid on August19, 2009 was refunded to petitioner on September 1, 2009 according to 37 CFR 1.26, and prior to the Notice of Incomplete Reply mailed September 4, 2009.

37 CFR 1.26 Refunds

(a) The Director may refund any fee paid by mistake **or in excess of that required**. A change of purpose after the payment of a fee, such as when a party desires to withdraw a patent filing for which the fee was paid, including an application, an appeal, or a request for an oral hearing, will not entitle a party to a refund of such fee. The Office will not refund amounts of twenty-five dollars or less unless a refund is specifically requested, and will not notify the payor of such amounts. If a party paying a fee or requesting a refund does not provide the banking information necessary for making refunds by electronic funds transfer (31 U.S.C. 3332 and 31 CFR part 208), or instruct the Office that refunds are to be credited to a deposit account, the Director may require such information, or use the banking information on the payment instrument to make a refund.

Any refund of a fee paid by credit card will be by a credit to the credit card account to which the fee was charged.

Therefore, without the required two-month extension of time and fee, by operation of law the application abandoned on September 8, 2009.

The petition under 37 CFR 1.137(b) is **GRANTED**.

The petition satisfies the requirements of 37 CFR 1.137(b) in that petitioner has supplied (1) Replacement drawings (previously submitted September 14, 2009) (2) the petition fee of $810.00, and (3) a proper statement of unintentional delay.

Further, it is not apparent whether the statement of unintentional delay was signed by a person who would have been in a position of knowing that the **entire** delay in filing the required reply from the due date for the reply until the filing of a grantable petition pursuant to 37 CFR 1.137(b) was unintentional. Nevertheless, in accordance with 37 CFR 10.18, the statement is accepted as constituting a certification of unintentional delay. However, in the event that petitioner has no knowledge that the delay was unintentional, petitioner must make such an inquiry to ascertain that, in fact, the delay was unintentional. If petitioner discovers that the delay was intentional, petitioner must notify the Office.

Additionally, an extension of time under 37 CFR 1.136 must be filed prior to the expiration of the maximum extendable period for reply. *See* In re Application of S., 8 USPQ2d 1630, 1631 (Comm'r Pats. 1988). Since the $180.00, two- month extension of time fee submitted on July 14, 2011 was subsequent to the maximum extendable period for reply, this fee is unnecessary and will be refunded to petitioner's credit card.

Further, the address given on the petition differs from the address of record. A courtesy copy of this decision is being mailed to the address given on the petition; however, the Office will mail all future correspondence solely to the address of record.

Telephone inquiries concerning this decision should be directed to Joan Olszewski at (571) 272-7751.

This application is being referred to the Office of Patent Application Processing for further processing in accordance with this decision on petition.

/Liana Walsh/
Liana Walsh
Petitions Examiner
Office of Petitions

cc: Edward C. Kwok
2033 Gateway Place, Suite 300
San Jose, CA 95110

UNITED STATES PATENT AND TRADEMARK OFFICE

Commissioner for Patents
United States Patent and Trademark Office
P.O. Box 1450
Alexandria, VA 22313-1450
www.uspto.gov

EMERSON, THOMSON & BENNETT, LLC
1914 AKRON-PENINSULA ROAD
AKRON OH 44313

MAILED

DEC 3 0 2010

OFFICE OF PETITIONS

In re Application of	:	
Michael A. LIGAS SR, et al	:	
Application No. 12/468,896	:	DECISION ON PETITION
Filed: May 20, 2009	:	TO WITHDRAW
Attorney Docket No. 40093.50008	:	FROM RECORD
	:	

This is a decision on the Request to Withdraw as attorney or agent of record under 37 C.F.R. § 1.36(b), filed December 3, 2010.

The request is **NOT APPROVED**.

A grantable request to withdraw as attorney/agent of record must be signed by every attorney/agent seeking to withdraw or contain a clear indication that one attorney is signing on behalf of another/others. The Office requires the practitioner(s) requesting withdrawal to certify that he, she, or they have: (1) given reasonable notice to the client, prior to the expiration of the response period, that the practitioner(s) intends to withdraw from employment; (2) delivered to the client or a duly authorized representative of the client all papers and property (including funds) to which the client is entitled; and (3) notified the client of any responses that may be due and the time frame within which the client must respond, pursuant 37 CFR 10.40(c).

The request to withdraw from record cannot be approved because it does not include the signature of the withdrawing practitioner. Any future submission should also include a date in which the request is signed.

Further, the request cannot be approved because the attorney was not appointed through the designation of a Customer Number, as indicated. .

All future correspondence from the Office will continue to be directed to the above-identified address until otherwise properly notified.

Telephone inquiries concerning this decision should be directed to the undersigned at (571) 272-6735.

/Diane Goodwyn/
Diane Goodwyn
Petitions Examiner
Office of Petitions

cc: MICHAEL A. LIGAS, SR.
24 FIFTH AVENUE N.E.
BARBERTON OH 44203

UNITED STATES PATENT AND TRADEMARK OFFICE

Commissioner for Patents
United States Patent and Trademark Office
P.O. Box 1450
Alexandria, VA 22313-1450
www.uspto.gov

EMERSON, THOMSON & BENNETT, LLC
1914 AKRON-PENINSULA ROAD
AKRON OH 44313

MAILED

FEB 22 2011

OFFICE OF PETITIONS

In re Application of	:	
Michael A. LIGAS SR, et al	:	
Application No. 12/468,896	:	DECISION ON PETITION
Filed: May 20, 2009	:	TO WITHDRAW
Attorney Docket No. 40093.50008	:	FROM RECORD
	:	

This is a decision on the Request to Withdraw as attorney or agent of record under 37 C.F.R. § 1.36(b), filed January 6, 2011.

The request is **NOT APPROVED.**

The request cannot be approved because the attorney of record was not appointed through use of Customer Number 78340, as indicated. Any future submission should include the proper method by which the attorney was appointed in order to ensure the Request is reviewed and processed expeditiously.

All future correspondence from the Office will continue to be directed to the above-identified address until otherwise properly notified.

Telephone inquiries concerning this decision should be directed to the undersigned at (571) 272-6735.

/Diane Goodwyn/
Diane Goodwyn
Petitions Examiner
Office of Petitions

cc: MICHAEL A. LIGAS, SR.
24 FIFTH AVENUE N.E.
BARBERTON OH 44203

UNITED STATES PATENT AND TRADEMARK OFFICE

Commissioner for Patents
United States Patent and Trademark Office
P.O. Box 1450
Alexandria, VA 22313-1450
www.uspto.gov

MAILED

MAY 02 2011

OFFICE OF PETITIONS

EMERSON, THOMSON & BENNETT, LLC
777 W. MARKET STREET
AKRON, OH 44303

In re Application of	:	
LIGAS SR., et al	:	
Application No. 12/468,896	:	DECISION ON PETITION
Filed: May 20, 2009	:	TO WITHDRAW
Attorney Docket No. 40093-50008	:	FROM RECORD
	:	

This is a decision on the Request to Withdraw as attorney or agent of record under 37 C.F.R. § 1.36(b), filed March 18, 2011.

The request is **APPROVED**.

A grantable request to withdraw as attorney/agent of record must be signed by every attorney/agent seeking to withdraw or contain a clear indication that one attorney is signing on behalf of another/others. The Office requires the practitioner(s) requesting withdrawal to certify that he, she, or they have: (1) given reasonable notice to the client, prior to the expiration of the response period, that the practitioner(s) intends to withdraw from employment; (2) delivered to the client or a duly authorized representative of the client all papers and property (including funds) to which the client is entitled; and (3) notified the client of any responses that may be due and the time frame within which the client must respond, pursuant 37 CFR 10.40(c).

The request was signed by Daniel A. Thomson the sole attorney of record.

Attorney Daniel A. Thomson has been withdrawn.

Applicant is reminded that there is no attorney of record at this time.

The correspondence address for future communications from the Office has been changed and the new correspondence address is the address first copied below.

Telephone inquiries concerning this decision should be directed to the undersigned at 571-272-6735.

/Diane C. Goodwyn/
Diane C. Goodwyn
Petitions Examiner
Office of Petitions

cc : MICHAEL A. LIGAS, SR.
24 FIFTH AVENUE N.E.
BARBERTON, OH 44203

cc: DANIEL A. THOMSON
EMERSON THOMSON BENNETT
1914 AKRON-PENINSUJLA ROAD
AKRON OH 44313-4810

UNITED STATES PATENT AND TRADEMARK OFFICE

UNITED STATES DEPARTMENT OF COMMERCE
United States Patent and Trademark Office
Address: COMMISSIONER FOR PATENTS
P.O. Box 1450
Alexandria, Virginia 22313-1450
www.uspto.gov

APPLICATION NUMBER	FILING OR 371(C) DATE	FIRST NAMED APPLICANT	ATTY. DOCKET NO./TITLE
12/468,896	05/20/2009	MICHAEL A. LIGAS SR.	40093.50008

CONFIRMATION NO. 1829

POWER OF ATTORNEY NOTICE

78340
Emerson, Thomson & Bennett, LLC
1914 Akron-Peninsula Road
Akron, OH 44313

OC000000047446172

Date Mailed: 05/02/2011

NOTICE REGARDING CHANGE OF POWER OF ATTORNEY

This is in response to the Power of Attorney filed 03/18/2011.

- The withdrawal as attorney in this application has been accepted. Future correspondence will be mailed to the new address of record. 37 CFR 1.33.

/dcgoodwyn/

Office of Data Management, Application Assistance Unit (571) 272-4000, or (571) 272-4200, or 1-888-786-0101

UNITED STATES PATENT AND TRADEMARK OFFICE

Commissioner for Patents
United States Patent and Trademark Office
P.O. Box 1450
Alexandria, VA 22313-1450
www.uspto.gov

Scully Scott Murphy & Presser PC
400 Garden City Plaza, Suite 300
Garden City NY 11530

MAILED

MAR 12 2012

OFFICE OF PETITIONS

In re Patent No. 8,114,510 :
Issue Date: February 14, 2012 :
Application No. 12/468,946 : ON PETITION
Filed: May 20, 2009 :
Attorney Docket No. **23820** :

This is a decision on the petition filed February 29, 2012, which is being treated as a request under 37 CFR 3.81(b)[1] to correct the name of the assignee on the front page of the above-identified patent by way of a Certificate of Correction.

The request is **GRANTED**.

Petitioner states that the correct assignee's name is "UT-BATTELLE, LLC" and that the incorrect assignee's name was included on the Fee(s) Transmittal form PTOL-85(b) at the time of payment of the issue fee. Accordingly, petitioner requests that a certificate of correction be issued to reflect the correct assignee on the front page of the Letters Patent in the patent to be issued from the application.

Telephone inquiries concerning this decision may be directed to the JoAnne Burke at (571) 272-4584. Inquiries regarding the issuance of a certificate of correction should be directed to the Certificate of Correction Branch at (571) 272-4200.

The Certificates of Correction Branch will be notified of this decision granting the petition under 37 CFR 3.81(b) and directing issuance of the requested Certificate of Correction.

JoAnne Burke
Petitions Examiner
Office of Petitions

[1] *See* MPEP 1309, subsection II; and Official Gazette of June 22, 2004.

CLAIMS

1. A method (200) for creating a secure online environment for a computing device connected to an untrusted network using a trusted computing device connected to a trusted network, comprising:

installing a proxy server on a first computing device, from a set of trusted computing devices that use one or more trusted networks for online access (204);

generating one or more shared encryption keys for the first computing device and a portable storage device (206);

initiating contact with the first computing device from a second computing device that accesses an untrusted network (208) comprising initiating a proxy server protocol from the portable storage device using the second computing device over the untrusted network (210); and

creating a secure connection between the second computing device and the first computing device using the shared encryption keys (212).

2. The method of claim 1, installing the proxy server from the portable storage device.

3. The method of claim 1, comprising:

installing the proxy server on the respective computing devices in the set of trusted computing devices from the portable storage device; and

generating one or more shared encryption keys for the portable storage device and the respective computing devices in the set of trusted computing devices.

4. The method of claim 3, initiating contact with a first computing device, from the set of trusted computing devices, comprising selecting a desired trusted computing device from the set of trusted computing devices.

5. The method of claim 3, initiating contact with a first computing device, from the set of trusted computing devices, comprising:

the second computing device connecting to an online centralized redirecting site;

the online centralized redirecting site locating a desired trusted computing device from the set of trusted computing devices; and

the online centralized redirecting site redirecting the second computing device connection to the desired trusted computing device.

6. The method of claim 3, the desired trusted computing device comprising a trusted computing device that provides a desired proximity to the second computing device and a desired connection speed.

7. The method of claim 1, comprising proxying data traffic for the second computing device that is using the untrusted network through the first computing device that is using the trusted network.

8. The method of claim 7, proxying data traffic for the second computing device comprising:

proxying outbound data traffic from the second computing device through the first computing device to the trusted network; and

proxying inbound data traffic from the trusted network through the first computing device to the second computing device.

9. The method of claim 1, generating one or more shared encryption keys for the first computing device and a portable storage device comprising:

generating a public/private key pair for the first computing device;

storing the private key on the first computing device; and

writing the public key to the portable storage device.

10. A system (500) for creating a secure online environment for a computing device connected to an untrusted network using a trusted computing device connected to a trusted network, comprising:

a proxy server installer (504) configured to install a proxy server on a first computing device, from a set of trusted computing devices that use one or more trusted networks for network access;

an encryption key generator (506) configured to generate one or more shared encryption keys for the first computing device and a portable storage device; and

a secure connection generator (516) disposed on the portable storage device (514), comprising a proxy server initiator (518) configured to initiate a proxy server protocol from the portable storage device using a connected second computing device, where the second computing device accesses an untrusted network, and the secure connection generator (516) configured to:

initiate contact with the first computing device from the second computing device over the untrusted network using the proxy server protocol; and

create a secure connection between the second computing device and the first computing device using the encryption keys over the untrusted network.

11. The system of claim 10, the proxy server installer and the encryption key generator disposed on the portable storage device.

12. The system of claim 10, comprising an online centralized redirector configured to facilitate connecting the second computing device to a desired trusted computing device, comprising:

a locator configured to locate a desired trusted computing device from the set of trusted computing devices; and

a connection redirector configured to redirect a connection from the second computing device to the desired trusted computing device.

13. The system of claim 12, the set of trusted computing devices configured to provide contact information for use by the online centralized redirector.

14. The system of claim 12, the desired trusted computing device disposed at a desired distance from the second computing device and configured to provide a desired connection speed with the second computing device.

15. The system of claim 10, the secure connection between the second computing device and the first computing device configured to proxy data traffic for the second computing device that is using the untrusted network through the first computing device that is using the trusted network.

PATENT COOPERATION TREATY

From the INTERNATIONAL SEARCHING AUTHORITY

To:

EPPENAUER, David Bartley

Microsoft Corporation One Microsoft Way Redmond, WA 98052 USA

PCT

NOTIFICATION OF TRANSMITTAL OF THE INTERNATIONAL SEARCH REPORT AND THE WRITTEN OPINION OF THE INTERNATIONAL SEARCHING AUTHORITY, OR THE DECLARATION

(PCT Rule 44.1)

	Date of mailing *(day/month/year)* 01 DECEMBER 2010 (01.12.2010)
Applicant's or agent's file reference 327093-02	**FOR FURTHER ACTION** See paragraphs 1 and 4 below
International application No. **PCT/US2010/034436**	International filing date *(day/month/year)* **11 MAY 2010 (11.05.2010)**
Applicant **MICROSOFT CORPORATION**	

1. ☒ The applicant is hereby notified that the international search report and the written opinion of the International Searching Authority have been established and are transmitted herewith.

   Filing of amendments and statement under Article 19:

   The applicant is entitled, if he so wishes, to amend the claims of the international application (see Rule 46):

   When? The time limit for filing such amendments is normally two months from the date of transmittal of the international search report.

   Where? Directly to the international Bureau of WIPO, 34 chemin des Colombettes 1211 Geneva 20, Switzerland, Facsimile No.: +41 22 338 82 70

   For more detailed instructions, see *PCT Applicant's Guide*, International Phase, paragraphs 9.004 , 9.011.

2. ☐ The applicant is hereby notified that no international search report will be established and that the declaration under Article 17(2)(a) to that effect and the written opinion of the International Searching Authority are transmitted herewith.

3. ☐ **With regard to any protest** against payment of (an) additional fee(s) under Rule 40.2, the applicant is notified that:

   ☐ the protest together with the decision thereon has been transmitted to the International Bureau together with any request to forward the texts of both the protest and the decision thereon to the designated Offices.

   ☐ no decision has been made yet on the protest; the applicant will be notified as soon as a decision is made.

4. **Reminders**

   The applicant may submit comments on an informal basis on the written opinion of the International Searching Authority to the International Bureau. The International Bureau will send a copy of such comments to all designated Offices unless an international preliminary examination report has been or is to be established. Following the expiration of 30 months from the priority date, these comments will also be made available to the public.

   Shortly after the expiration of **18 months** from the priority date, the international application will be published by the International Bureau. If the applicant wishes to avoid or postpone publication, a notice of withdrawal of the international application, or of the priority claim, must reach the International Bureau before the completion of the technical preparations for international publication (Rules 90bis.1 and 90bis.3).

   Within **19 months** from the priority date, but only in respect of some designated Offices, a demand for international preliminary examination must be filed if the applicant wishes to postpone the entry into the national phase **until 30 months** from the priority date (in some Offices even later); otherwise, the applicant must, **within 20 months** from the priority date, perform the prescribed acts for entry into the national phase before those designated Offices.
   In respect of other designated Offices, the time limit of **30 months** (or later) will apply even if no demand is filed within 19months.

   For details about the applicable time limits, Office by Office, see www.wipo.int/pct/en/texts/time_limits.html and the PCT Applicant's Guide, National Chapters.

Name and mailing address of the ISA/KR Korean Intellectual Property Office Government Complex-Daejeon, 139 Seonsa-ro, Seo-gu, Daejeon 302-701, Republic of Korea Facsimile No. 82-42-472-7140	Authorized officer COMMISSIONER Telephone No. 82-42-481-8753

* Attention

Copies of the documents cited in the international search report can be searched in the following Korean Intellectual Property Office English website for three months from the date of mailing of the international search report.

http://www.kipo.go.kr/en/ => PCT Services => PCT Services

ID : PCT international application number
PW : **UR342W2M**

Inquiries related to PCT International Search Report or Written Opinion prepared by KIPO as an International Searching Authority can be answered not only by KIPO but also through IPKC (Intellectual Property Korea Center), located in Vienna, VA, which functions as a PCT Help Desk for PCT applicants.

Homepage: http://www.ipkcenter.com
Email: ipkc@ipkcenter.com
Phone: +1 703 388 1066
Fax: +1 703 388 1084

PATENT COOPERATION TREATY

From the
INTERNATIONAL SEARCHING AUTHORITY

To:
EPPENAUER, David Bartley

Microsoft Corporation One Microsoft Way Redmond, WA 98052 USA

PCT

WRITTEN OPINION OF THE INTERNATIONAL SEARCHING AUTHORITY

(PCT Rule 43bis.1)

Date of mailing *(day/month/year)* **01 DECEMBER 2010 (01.12.2010)**

Applicant's or agent's file reference
327093-02

FOR FURTHER ACTION
See paragraph 2 below

International application No.	International filing date *(day/month/year)*	Priority date *(day/month/year)*
PCT/US2010/034436	**11 MAY 2010 (11.05.2010)**	20 MAY 2009 (20.05.2009)

International Patent Classification (IPC) or both national classification and IPC

H04L 9/30(2006.01)i, H04L 9/32(2006.01)i

Applicant

MICROSOFT CORPORATION

1. This opinion contains indications relating to the following items:

- [X] Box No. I Basis of the opinion
- [ ] Box No. II Priority
- [ ] Box No. III Non-establishment of opinion with regard to novelty, inventive step and industrial applicability
- [ ] Box No. IV Lack of unity of invention
- [X] Box No. V Reasoned statement under Rule 43bis.1(a)(i) with regard to novelty, inventive step or industrial applicability; citations and explanations supporting such statement
- [ ] Box No. VI Certain documents cited
- [ ] Box No. VII Certain defects in the international application
- [X] Box No. VIII Certain observations on the international application

2. **FURTHER ACTION**
If a demand for international preliminary examination is made, this opinion will be considered to be a written opinion of the International Preliminary Examining Authority ("IPEA") except that this does not apply where the applicant chooses an Authority other than this one to be the IPEA and the chosen IPEA has notified the International Bureau under Rule 66.1bis(b) that written opinions of this International Searching Authority will not be so considered.

If this opinion is, as provided above, considered to be a written opinion of the IPEA, the applicant is invited to submit to the IPEA a written reply together, where appropriate, with amendments, before the expiration of 3 months from the date of mailing of Form PCT/ISA/220 or before the expiration of 22 months from the priority date, whichever expires later.
For further options, see Form PCT/ISA/220.

3. For further details, see notes to Form PCT/ISA/220.

Name and mailing address of the ISA/KR	Date of completion of this opinion	Authorized officer
Korean Intellectual Property Office Government Complex-Daejeon, 139 Seonsa-ro, Seo-gu, Daejeon 302-701, Republic of Korea Facsimile No. 82-42-472-7140	29 NOVEMBER 2010 (29.11.2010)	Yang, Jong Phil Telephone No.82-42-481-8595

WRITTEN OPINION OF THE
INTERNATIONAL SEARCHING AUTHORITY

International application No.
PCT/US2010/034436

Box No. I Basis of this opinion

1. With regard to the **language**, this opinion has been established on the basis of :

   ☒ the international application in the language in which it was filed

   ☐ a translation of the international application into _____ , which is the language of a translation furnished for the purposes of international search (Rules 12.3(a) and 23.1(b))

2. ☐ This opinion has been established taking into account the **rectification of an obvious mistake** authorized by or notified to this Authority under Rule 91 (Rule 43*bis*.1(a))

3. With regard to any **nucleotide and/or amino acid sequence** disclosed in the international application, this opinion has been established on the basis of:

   a. a sequence listing filed or furnished
   ☐ on paper
   ☐ in electronic form

   b. time of filing or furnishing
   ☐ contained in the international application as filed.
   ☐ filed together with the international application in electronic form.
   ☐ furnished subsequently to this Authority for the purposes of search.

4. ☐ In addition, in the case that more than one version or copy of a sequence listing has been filed or furnished, the required statements that the information in the subsequent or additioanl copies is identical to that in the application as filed or does not go beyond the application as filed, as appropriate, were furnished.

5. Additional comments:

WRITTEN OPINION OF THE INTERNATIONAL SEARCHING AUTHORITY

International application No.
PCT/US2010/034436

Box No. V Reasoned statement under Rule 43bis.1(a)(i) with regard to novelty, inventive step or industrial applicability; citations and explanations supporting such statement

1. Statement

Novelty (N)	Claims	1-15	YES
	Claims	NONE	NO
Inventive step (IS)	Claims	1-15	YES
	Claims	NONE	NO
Industrial applicability (IA)	Claims	1-15	YES
	Claims	NONE	NO

2. Citations and explanations :

Reference is made to the following documents:
D1: WO 2005-065008 A2 (NOKIA INC. et al.) 21 July 2005.
D2: WO 02-093377 A1 (INTERNATIONAL BUSINESS MACHINES CORPORATION) 21 November 2002.
D3: US 2002-0169847 A1 (MICHAEL E.S. LUNA et al.) 14 November 2002.

1. Novelty and Inventive Step

1.1 Claims 1-9
Independent claim 1 of the present invention relates to a method for creating a secure online environment for a computing device connected to an untrusted network using a trusted computing device connected to a trusted network, comprising: a) installing a proxy server on a first computing device, from a set of trusted computing devices; b) generating one or more shared encryption keys for the first computing device and a portable storage device; c) initiating contact with the first computing device from a second computing device that accesses an untrusted network comprising initiating a proxy server protocol from the portable storage device; and d) creating a secure connection between the second computing device and the first computing device using the shared encryption keys.
However, none of the documents D1-D3 disclose the method steps a)-d). Accordingly, claim 1 is not anticipated from any of the documents D1-D3, nor is it obvious over the documents individually or in combination.
Thus, **claim 1 meets the requirements of PCT Article 33(2) and 33(3) with respect to novelty and inventive step.** Also, **claims 2-9 comply with PCT Article 33(2) and 33(3) as they are dependent claims of claim 1.**

1.2 Claims 10-15
The technical features of claims 10 are substantially the same as those of claim 1 except for the category. Accordingly, the same reasoning as in claim 1 applies to claim 10. Therefore, **claim 10 meets the requirements of PCT Article 33(2) and 33(3) with respect to novelty and inventive step.**
Also, **claims 11-15 comply with PCT Article 33(2) and 33(3) as they are dependent claims of claim 10.**

2. Industrial Applicability
Claims 1-15 are industrially applicable under PCT Article 33(4).

※ The search has been carried out and the statement on novelty, inventive step, and industrial applicability has been established, on the assumption that claim 6 is dependent on claim 5.

Box No. VIII Certain observations on the international application

The following observations on the clarity of the claims, description, and drawings or on the question whether the claims are fully supported by the description, are made:

Claim 6 dependent on claim 3 is worded in reference to the desired trusted computing device of claim 3. However, said desired trusted computing device has not been worded in claim 3. Therefore, claim 6 does not meet the requirements of PCT Article 6.

PATENT COOPERATION TREATY

PCT

INTERNATIONAL SEARCH REPORT

(PCT Article 18 and Rules 43 and 44)

Applicant's or agent's file reference 327093-02	FOR FURTHER ACTION	see Form PCT/ISA/220 as well as, where applicable, item 5 below.
International application No. PCT/US2010/034436	International filing date *(day/month/year)* 11 MAY 2010 (11.05.2010)	(Earliest) Priority Date *(day/month/year)* 20 MAY 2009 (20.05.2009)
Applicant MICROSOFT CORPORATION		

This International search report has been prepared by this International Searching Authority and is transmitted to the applicant according to Article 18. A copy is being transmitted to the International Bureau.

This international search report consists of a total of 3 sheets.

☐ It is also accompanied by a copy of each prior art document cited in this report.

1. **Basis of the report**
   a. With regard to the **language**, the international search was carried out on the basis of:
      ☒ the international application in the language in which it was filed
      ☐ a translation of the international application into _____, which is the language of a translation furnished for the purposes of international search (Rules 12.3(a) and 23.1(b))
   b. ☐ This international search report has been established taking into account the **rectification of an obvious mistake** authorized by or notified to this Authority under Rule 91 (Rule 43.6*bis*(a)).
   c. ☐ With regard to any **nucleotide and/or amino acid sequence** disclosed in the international application, see Box No. I.
2. ☐ **Certain claims were found unsearchable** (See Box No. II)
3. ☐ **Unity of invention is lacking** (See Box No. III)
4. With regard to the **title**,
   ☒ the text is approved as submitted by the applicant.
   ☐ the text has been established by this Authority to read as follows:
5. With regard to the **abstract**,
   ☒ the text is approved as submitted by the applicant.
   ☐ the text has been established, according to Rule 38.2, by this Authority as it appears in Box No. IV. The applicant may, within one month from the date of mailing of this international search report, submit comments to this Authority.
6. With regard to the **drawings**,
   a. the figure of the **drawings** to be published with the abstract is Figure No. 2
      ☒ as suggested by the applicant.
      ☐ as selected by this Authority, because the applicant failed to suggest a figure.
      ☐ as selected by this Authority, because this figure better characterizes the invention.
   b. ☐ none of the figure is to be published with the abstract.

INTERNATIONAL SEARCH REPORT

International application No.
PCT/US2010/034436

A. CLASSIFICATION OF SUBJECT MATTER

H04L 9/30(2006.01)i, H04L 9/32(2006.01)i

According to International Patent Classification (IPC) or to both national classification and IPC

B. FIELDS SEARCHED

Minimum documentation searched (classification system followed by classification symbols)

H04L 9/30; G06F 11/30; G06F 15/16; NotA vai/lable

Documentation searched other than minimum documentation to the extent that such documents are included in the fields searched

Korean utility models and applications for utility models

Japanese utility models and applications for utility models

Electronic data base consulted during the international search (name of data base and, where practicable, search terms used)

eKOMPASS(KIPO internal) & Keywords: secure, trust, storage, proxy and key

C. DOCUMENTS CONSIDERED TO BE RELEVANT

Category*	Citation of document, with indication, where appropriate, of the relevant passages	Relevant to claim No.
A	WO 2005-065008 A2 (NOKIA INC. et al.) 21 July 2005. See abstract, figs.2,5 and claims 1-7,10,18,27.	1-15
A	WO 02-093377 A1 (INTERNATIONAL BUSINESS MACHINES CORPORATION) 21 November 2002. See abstract, figs.1,3,6-7 and claims 1-21,31.	1-15
A	US 2002-0169947 A1 (MICHAEL E.S. LUNA et al.) 14 November 2002. See abstract, figs.1-2,6 and claims 1-8.	1-15

☐ Further documents are listed in the continuation of Box C.

☒ See patent family annex.

* Special categories of cited documents:

"A" document defining the general state of the art which is not considered to be of particular relevance

"E" earlier application or patent but published on or after the international filing date

"L" document which may throw doubts on priority claim(s) or which is cited to establish the publication date of citation or other special reason (as specified)

"O" document referring to an oral disclosure, use, exhibition or other means

"P" document published prior to the international filing date but later than the priority date claimed

"T" later document published after the international filing date or priority date and not in conflict with the application but cited to understand the principle or theory underlying the invention

"X" document of particular relevance; the claimed invention cannot be considered novel or cannot be considered to involve an inventive step when the document is taken alone

"Y" document of particular relevance; the claimed invention cannot be considered to involve an inventive step when the document is combined with one or more other such documents,such combination being obvious to a person skilled in the art

"&" document member of the same patent family

Date of the actual completion of the international search	Date of mailing of the international search report
29 NOVEMBER 2010 (29.11.2010)	**01 DECEMBER 2010 (01.12.2010)**
Name and mailing address of the ISA/KR Korean Intellectual Property Office Government Complex-Daejeon, 139 Seonsa-ro, Seo-gu, Daejeon 302-701, Republic of Korea Facsimile No. 82-42-472-7140	Authorized officer Yang, Jong Phil Telephone No. 82-42-481-8595

INTERNATIONAL SEARCH REPORT

Information on patent family members

International application No.
PCT/US2010/034436

Patent document cited in search report	Publication date	Patent family member(s)	Publication date
WO 2005-065008 A2	21.07.2005	CN 1645813 A	27.07.2005
		CN 1645813 C0	09.04.2008
		EP 1700180 A2	13.09.2006
		JP 2007-520797 A	26.07.2007
		JP 2007-520797 T	26.07.2007
		KR 10-0758733 B1	14.09.2007
		KR 10-2005-0069912 A	05.07.2005
		US 2005-0160161 A1	21.07.2005
		WO 2005-065008 A3	21.07.2005
WO 02-093377 A1	21.11.2002	CA 2444291-A1	21.11.2002
		CN 1516833 A	28.07.2004
		CN 1516833 C0	13.12.2006
		EP 1388060 A1	11.02.2004
		EP 1388060 A4	15.12.2004
		IL 158612 D0	12.05.2004
		JP 2004-537101 A	09.12.2004
		JP 2004-537101 T	09.12.2004
		KR 10-0615793 B1	25.08.2006
		TW 242962 A	01.11.2005
		TW 242962 B	01.11.2005
		US 2002-0169961 A1	14.11.2002
		US 6986047 B2	10.01.2006
US 2002-0169847 A1	14.11.2002	AT 311062 T	15.12.2005
		DE 60207474 D1	29.12.2005
		DE 60207474 T2	10.08.2006
		EP 1251671 A2	23.10.2002
		EP 1251671 A3	02.04.2003
		EP 1251671 B1	23.11.2005
		US 7099917 B2	29.08.2006

PATENT

First Named Inventor: Rajesh Viswanathan
Application No.: 12/468,948
Filed: May 20, 2009
Customer No.: 69316
Title: PORTABLE SECURE COMPUTING NETWORK

Attorney Docket No.: 327093.01
Group Art Unit: 69316
Examiner: BARRON JR, GILBERTO
Confirmation Number: 1940

Commissioner for Patents
P.O. Box 1460
Alexandria, VA 22313-1450

Statement on Request for Participation in the PCT-Patent Prosecution Highway Pilot Program

Dear Sir:

Applicant states that the claims in the US application were amended to sufficiently correspond to the claims in the PCT application. Additionally, applicant would like to bring to attention that the US dependent claims that were omitted or combined with another dependent claim in the corresponding PCT application should be deemed patentable because their respective independent claim was deemed patentable in the international search report. Therefore, applicant respectfully requests the omitted dependent claims in the US application also be considered.

Additionally, applicant would like to bring to attention the formatting differences in the PCT claims, specifically the numerical references that refer to the drawings. For your convenience, a copy of the claims in the PCT application is included.

Accordingly, applicant requests the petition to participate in the PCT – Patent Prosecution Highway Pilot Program be granted. If you have any questions, please do not hesitate to call the Applicant's attorney at the telephone number listed below.

Respectfully submitted,

Date: April 28, 2011

By: /Damon A. Rieth/

Atty: Damon A. Rieth
Reg. No.: 52,167
Direct telephone: (425) 421-2377
Microsoft Corporation
One Microsoft Way
Redmond WA 98052-6399

CERTIFICATE OF MAILING OR TRANSMISSION
(Under 37 CFR § 1.8(a)) or ELECTRONIC FILING

I hereby certify that this correspondence is being electronically deposited with the USPTO via EFS-Web on the date shown below:

April 29, 2011
Date

/Eric Matt/
Eric Matt

PTO/SB/20PCT-FI (01-11)
Approved for use through 01/31/2012. OMB 0651-0058
U.S. Patent and Trademark Office; U. S. DEPARTMENT OF COMMERCE
Under the Paperwork Reduction Act of 1995, no persons are required to respond to a collection of information unless it displays a valid OMB control number.

REQUEST FOR PARTICIPATION IN THE PATENT COOPERATION TREATY - PATENT PROSECUTION HIGHWAY (PCT-PPH) PILOT PROGRAM BETWEEN THE NATIONAL BOARD OF PATENTS AND REGISTRATION OF FINLAND (NBPR) AND THE USPTO

Application No:	12/468,948	Filing date:	May 20, 2009
First Named Inventor:	Rajesh Viswanathan		
Title of the Invention:	PORTABLE SECURE COMPUTING NETWORK		

THIS REQUEST FOR PARTICIPATION IN THE PCT-PPH PILOT PROGRAM ALONG WITH THE REQUIRED DOCUMENTS MUST BE SUBMITTED VIA EFS-WEB. INFORMATION REGARDING EFS-WEB IS AVAILABLE AT HTTP://WWW.USPTO.GOV/EBC/EFS_HELP.HTML

APPLICANT HEREBY REQUESTS PARTICIPATION IN THE PCT-PPH PROGRAM AND PETITIONS TO MAKE THE ABOVE-IDENTIFIED APPLICATION SPECIAL UNDER THE PCT-PPH PROGRAM.

The above-identified application is (1) a national stage entry of the corresponding PCT application, or (2) a national stage entry of another PCT application which claims priority to the corresponding PCT application, or (3) a national application that claims domestic/ foreign priority to the corresponding PCT application, or (4) a national application which forms the basis for the priority claim in the corresponding PCT application, or (5) a continuing application of a U.S. application that satisfies one of (1) to (4) above, or (6) a U.S. application that claims domestic benefit to a U.S. provisional application which forms the basis for the priority claim in the corresponding PCT application.

The corresponding PCT application number(s) is/are: PCT/US10/34436

The international filing date of the corresponding PCT application(s) is/are: May 11, 2010

I. List of Required Documents:

a. **A copy of the latest international work product (WO/ISA, WO/IPEA, or IPER) in the above–identified corresponding PCT application(s)**

☑ Is attached.

☐ Is not attached because the document is already in the U.S. application.

b. **A copy of all claims which were indicated as having novelty, inventive step and industrial applicability in the above-identified corresponding PCT application(s).**

☑ Is attached.

☐ Is not attached because the document is already in the U.S. application.

c. **English translations of the documents in a. and b. above are attached (if the documents are not in the English language). A statement that the English translation is accurate is attached for the document in b. above.**

This collection of information is required by 35 U.S.C. 119, 37 CFR 1.55, and 37 CFR 1.102(d). The information is required to obtain or retain a benefit by the public, which is to file (and by the USPTO to process) an application. Confidentiality is governed by 35 U.S.C. 122 and 37 CFR 1.11 and 1.14. This collection is estimated to take 2 hours to complete, including gathering, preparing, and submitting the completed application form to the USPTO. Time will vary depending upon the individual case. Any comments on the amount of time you require to complete this form and/or suggestions for reducing this burden should be sent to the Chief Information Officer, U.S. Patent and Trademark Office, U.S. Department of Commerce, P.O. Box 1450, Alexandria, VA 22313-1450. DO NOT SEND FEES OR COMPLETED FORMS TO THIS ADDRESS.

Approved for use through 01/31/2012. OMB 0651-0058
U.S.Patent and Trademark Office; U.S. DEPARTMENT OF COMMERCE
Under the Paperwork Reduction Act of 1995, no persons are required to respond to a collection of information unless it displays a valid OMB control number.

REQUEST FOR PARTICIPATION IN THE PCT-PPH PILOT PROGRAM BETWEEN THE NBPR AND THE USPTO

(continued)

Application No.:	12/468,948
First Named Inventor:	Rajesh Viswanathan

d. **(1) An information disclosure statement listing the documents cited in the international work products (ISR, WO/ISA, WO/IPEA, IPER) of the corresponding PCT application.**

☐ Is attached

☑ Has already been filed in the above-identified U.S. application on January 11, 2011

(2) Copies of all documents (except) for U.S. patents or U.S. patent application publications)

☐ Are attached.

☑ Have already been filed in the above-identified U.S. application on January 11, 2011

II. Claims Correspondence Table:

Claims in US Application	Patentable Claims in the corresponding PCT Application	Explanation regarding the correspondence
1-6	1-6	Claims are identical except for numerical references that refer to the drawings in the PCT application
7		US Claim 7 is patentable because it is dependent upon claim 1, which the ISR has deemed patentable in corresponding PCT claim 1.
8	7	Claims are identical except for numerical references that refer to the drawings in the PCT application
9	8	Claims are identical except for numerical references that refer to the drawings in the PCT application
10		US Claim 10 is patentable because it is dependent upon claim 8, which the ISR has deemed patentable in corresponding PCT claim 7.
11	9	Claims are identical except for numerical references that refer to the drawings in the PCT application
12		US Claim 12 is patentable because it is dependent upon claim 1, which the ISR has deemed patentable in corresponding PCT claim 1.
13	10	Claims are identical except for numerical references that refer to the drawings in the PCT application
14	11	Claims are identical except for numerical references that refer to the drawings in the PCT application
15	12	Claims are identical except for numerical references that refer to the drawings in the PCT application
16	13	Claims are identical except for numerical references that refer to the drawings in the PCT application
17	14	Claims are identical except for numerical references that refer to the drawings in the PCT application
18	15	Claims are identical except for numerical references that refer to the drawings in the PCT application
19		US Claim 19 is patentable because it is dependent upon claim 13, which the ISR has deemed patentable in corresponding PCT claim 10.
20	N/A	Claim canceled in preliminary amendment filed 4/29/11

III. All the claims in the US application sufficiently correspond to the patentable claims in the corresponding PCT application.

Signature /Damon A. Rieth/	Date April 29, 2011
Name (Print/Typed) Damon A. Rieth	Registration Number 52,167

Privacy Act Statement

The **Privacy Act of 1974 (P.L. 93-579)** requires that you be given certain information in connection with your submission of the attached form related to a patent application or patent. Accordingly, pursuant to the requirements of the Act, please be advised that: (1) the general authority for the collection of this information is 35 U.S.C. 2(b)(2); (2) furnishing of the information solicited is voluntary; and (3) the principal purpose for which the information is used by the U.S. Patent and Trademark Office is to process and/or examine your submission related to a patent application or patent. If you do not furnish the requested information, the U.S. Patent and Trademark Office may not be able to process and/or examine your submission, which may result in termination of proceedings or abandonment of the application or expiration of the patent.

The information provided by you in this form will be subject to the following routine uses:

1. The information on this form will be treated confidentially to the extent allowed under the Freedom of Information Act (5 U.S.C. 552) and the Privacy Act (5 U.S.C 552a). Records from this system of records may be disclosed to the Department of Justice to determine whether disclosure of these records is required by the Freedom of Information Act.
2. A record from this system of records may be disclosed, as a routine use, in the course of presenting evidence to a court, magistrate, or administrative tribunal, including disclosures to opposing counsel in the course of settlement negotiations.
3. A record in this system of records may be disclosed, as a routine use, to a Member of Congress submitting a request involving an individual, to whom the record pertains, when the individual has requested assistance from the Member with respect to the subject matter of the record.
4. A record in this system of records may be disclosed, as a routine use, to a contractor of the Agency having need for the information in order to perform a contract. Recipients of information shall be required to comply with the requirements of the Privacy Act of 1974, as amended, pursuant to 5 U.S.C. 552a(m).
5. A record related to an International Application filed under the Patent Cooperation Treaty in this system of records may be disclosed, as a routine use, to the International Bureau of the World Intellectual Property Organization, pursuant to the Patent Cooperation Treaty.
6. A record in this system of records may be disclosed, as a routine use, to another federal agency for purposes of National Security review (35 U.S.C. 181) and for review pursuant to the Atomic Energy Act (42 U.S.C. 218(c)).
7. A record from this system of records may be disclosed, as a routine use, to the Administrator, General Services, or his/her designee, during an inspection of records conducted by GSA as part of that agency's responsibility to recommend improvements in records management practices and programs, under authority of 44 U.S.C. 2904 and 2906. Such disclosure shall be made in accordance with the GSA regulations governing inspection of records for this purpose, and any other relevant (*i.e.*, GSA or Commerce) directive. Such disclosure shall not be used to make determinations about individuals.
8. A record from this system of records may be disclosed, as a routine use, to the public after either publication of the application pursuant to 35 U.S.C. 122(b) or issuance of a patent pursuant to 35 U.S.C. 151. Further, a record may be disclosed, subject to the limitations of 37 CFR 1.14, as a routine use, to the public if the record was filed in an application which became abandoned or in which the proceedings were terminated and which application is referenced by either a published application, an application open to public inspection or an issued patent.
9. A record from this system of records may be disclosed, as a routine use, to a Federal, State, or local law enforcement agency, if the USPTO becomes aware of a violation or potential violation of law or regulation.

UNITED STATES PATENT AND TRADEMARK OFFICE

UNITED STATES DEPARTMENT OF COMMERCE
United States Patent and Trademark Office
Address: COMMISSIONER FOR PATENTS
P.O. Box 1450
Alexandria, Virginia 22313-1450
www.uspto.gov

APPLICATION NO.	FILING DATE	FIRST NAMED INVENTOR	ATTORNEY DOCKET NO.	CONFIRMATION NO.
12/468,948	05/20/2009	Rajesh Viswanathan	327093.01	1940

69316 7590 06/23/2011
MICROSOFT CORPORATION
ONE MICROSOFT WAY
REDMOND, WA 98052

EXAMINER
BARRON JR, GILBERTO

ART UNIT	PAPER NUMBER
2432	

NOTIFICATION DATE	DELIVERY MODE
06/23/2011	ELECTRONIC

Please find below and/or attached an Office communication concerning this application or proceeding.

The time period for reply, if any, is set in the attached communication.

Notice of the Office communication was sent electronically on above-indicated "Notification Date" to the following e-mail address(es):

vffiling@microsoft.com
stevensp@microsoft.com
ntovar@MICROSOFT.COM

UNITED STATES PATENT AND TRADEMARK OFFICE

Commissioner for Patents
United States Patent and Trademark Office
P.O. Box 1450
Alexandria, VA 22313-1450
www.uspto.gov

MICROSOFT CORPORATION
ONE MICROSOFT WAY
REDMOND WA 98052

In re Application of: Rajesh VISWANATHAN, et al.
Application No. 12468948
Filed: May 20, 2009
For: PORTABLE SECURE COMPUTING NETWORK

DECISION ON REQUEST TO PARTICIPATE IN PATENT PROSECUTION HIGHWAY PROGRAM AND PETITION TO MAKE SPECIAL UNDER 37 CFR 1.102(d)

This is a decision on the request to participate in the PCT- Patent Prosecution Highway (PPH) pilot program and the petition under 37 CFR 1.102(d), filed April 29, 2011, to make the above-identified application special.

The petition is **DISMISSED.**

A grantable request to participate in the PCT PPH program and petition to make special require:

(1) The relationship between the corresponding U.S. application for which participation in the PCT-PPH pilot program is requested and the PCT application satisfies one of the following:

(a) The U.S. application is a national stage entry of the corresponding PCT application.

(b)The U.S. application is a national application which forms the basis for the priority claim in the corresponding PCT application.

(c) The U.S. application is a national stage entry of another PCT application (which can be filed in any competent receiving office) which claims priority to the corresponding PCT application.

(d) The U.S. application is a national application claiming foreign/domestic priority to the corresponding PCT application.

(e) The U.S. application is a continuing application (continuation, divisional, or continuation-in-part) of the U.S. application which satisfies one of the above (a) to (d) scenarios.

(2) The latest work product in the international phase of the PCT application corresponding to the U.S. application indicates at least one claim in the PCT application has novelty, inventive step and industrial applicability. In case any observation is described in Box VIII of the WO/ISA, or WO/IPEA, or IPER which forms the basis for the PCT-PPH request, applicant must identify and explain why the claim(s) is/are not subject to any observation described in Box VIII irrespective of whether an amendment is submitted to correct the observation described in Box VIII.

(3) All the claims in each U.S. application for which a request for participation in the PCT-PPH pilot program is made must sufficiently correspond to or be mended to sufficiently correspond to one or more of those claims indicated as having novelty, inventive step and industrial applicability and free of any observation described in Box VIII in the latest work product of the corresponding PCT application.

(4) Substantive examination of the U.S. application for which participation in the PCT-PPH pilot program is requested has not begun.

(5) Applicant must submit a copy of the latest international work product which indicated that the claim(s) has/have novelty, inventive step and industrial applicability along with an English translation thereof if the copy of the latest international work product is not in the English language.

(6) Applicant must submit a copy of the claims from the corresponding PCT application which were indicated as having novelty, inventive step and industrial applicability in the latest work product of the PCT application along with an English translation thereof and a statement that the English translation is accurate if the claims are not in the English language. Applicant is required to submit a claims correspondence table in English. The claims correspondence table must indicate how all the claims in the U.S. application sufficiently correspond to the claims indicated as having novelty, inventive step and industrial applicability in the latest international work product.

(7) Applicant must submit an information disclosure statement (IDS) listing the documents cited in the international work products (ISR, WOIISA, WOIIPEA, PER) of the PCT.

(8) The request for participation in the PCT-PPH pilot program and all the supporting documents must be submitted to the USPTO via EFS-Web and indexed with the following document description: "Petition to make special under PCT-Patent Pros Hwy. Any preliminary amendments and IDS submitted with the PCT-PPH documents must be separately indexed as a preliminary amendment and IDS, respectively.

The request to participate in the PCT-PPH program and petition fail to meet the requirement of items **(2)** and **(3)** above. With respect to item **(2)**, Applicant failed to identify and explain why the claim(s) is/are not subject to any observation described in Box VIII irrespective of whether an amendment is submitted to correct the observation described in Box VIII. With respect to item **(3)**, the claims are not free of the observation described in Box VIII in the latest work product of the corresponding PCT application.

Accordingly, the Petition is **DISMISSED**.

Applicant is given a time period of ONE MONTH or THIRTY DAYS, whichever is longer, to correct the deficiencies. NO EXTENSION OF TIME UNDER 37 CFR 1.136 IS PERMITTED.

If the deficiencies are not corrected with the time period given, the application will await action in its regular turn.

Telephone inquiries concerning this decision should be directed to Kim Huynh at 571-272-4147

All other inquiries concerning the examination or status of the application is accessible in the PAIR system at http://www.uspto.gov/ebc/index.html.

/Kim Huynh/

Kim Huynh
Quality Assurance Specialist
Technology Center 2400

UNITED STATES PATENT AND TRADEMARK OFFICE

Commissioner for Patents
United States Patent and Trademark Office
P.O. Box 1450
Alexandria, VA 22313-1450
www.uspto.gov

SQUIRE, SANDERS & DEMPSEY L.L.P.
275 BATTERY STREET, SUITE 2600
SAN FRANCISCO CA 94111-3356

MAILED
SEP 24 2010
OFFICE OF PETITIONS

In re Application of	:	
Peter Joseph AYRE, et al	:	
Application No. 12/468,951	:	DECISION ON PETITION
Filed: May 20, 2009	:	
Attorney Docket No. CU07493 BWH	:	

This is a decision on the petition under the unintentional provisions of 37 CFR 1.137(b), filed July 23, 2010, to revive the above-identified application.

The petition is **GRANTED**.

The application became abandoned for failure to reply in a timely manner to the Notice to File Corrected Application Papers (Notice), mailed June 4, 2009. The Notice set a period for reply of two (2) months from the mail date of the Notice. No extensions of time under the provisions of 37 CFR 1.136(a) were obtained. Accordingly, the application became abandoned on August 5, 2009.

The petition satisfies the requirements of 37 CFR 1.137(b) in that petitioner has supplied (1) the reply in the form replacement drawings; (2) the petition fee of $1620; and (3) a proper statement of unintentional delay.

It is not apparent whether the person signing the statement of unintentional delay was in a position to have firsthand or direct knowledge of the facts and circumstances of the delay at issue. Nevertheless, such statement is being treated as having been made as the result of a reasonable inquiry into the facts and circumstances of such delay. See 37 CFR 10.18(b) and Changes to Patent Practice and Procedure; Final Rule Notice, 62 Fed. Reg. 53131, 53178 (October 10, 1997), 1203 Off. Gaz. Pat. Office 63, 103 (October 21, 1997). In the event that such an inquiry has not been made, petitioner must make such an inquiry. If such inquiry results in the discovery that it is not correct that the entire delay in filing the required reply from the due date for the reply until the filing of a grantable petition pursuant to 37 CFR 1.137(b) was unintentional, petitioner must notify the Office.

The application file does not indicate a change of address has been filed in this case, although the address given on the petition differs from the address of record. A change of address should be filed in this case in accordance with MPEP 601.03. A courtesy copy of this decision is being mailed to the address noted on the petition. However, until otherwise instructed, all future correspondence regarding this application will be mailed solely to the address of record.

Telephone inquiries concerning this decision should be directed to the undersigned at (571) 272-6735.

This application is being referred to the Office of Data Management for further pre-examination processing.

/dcg/
Diane C. Goodwyn
Petitions Examiner
Office of Petitions

cc: JAMES L. REED
SQUIRE, SANDERS & DEMPSEY L.L.P.
ONE MARITIME PLAZA, STE. 300
SAN FRANCISCO, CA 94111-3492

UNITED STATES PATENT AND TRADEMARK OFFICE

Commissioner for Patents
United States Patent and Trademark Office
P.O. Box 1450

Acushnet Company
333 Bridge Street
P.O. Box 965
Fairhaven, Massachusetts 02719

MAILED
MAR 31 2011
OFFICE OF PETITIONS

In re Application of	:	
Jeffrey W. MEYER et al.	:	DECISION GRANTING PETITION
Application No. 12/469,058	:	UNDER 37 CFR 1.137(b)
Filed: 20 May 2009	:	
Atty. Docket No.: C03-04-C5	:	

This is a decision on the petition under 37 CFR 1.137(b), filed 13 January 2011, to revive the above-identified application ("Application").

The petition is **GRANTED**.

The Application became abandoned for failure to reply in a timely manner to the Notice of Allowance and Fee (s) Due mailed 12 October 2010 ("Notice"), which set a statutory reply period of three (3) months. The application thus became abandoned on 13 January 2011, with notification mailed 19 January 2011.

A grantable petition under 37 CFR 1.137(b) must be accompanied by: (1) the reply, unless previously filed; (2) the petition fee as set forth in 37 CFR 1.17(m); (3) a Statement that the entire delay in filing the required reply from the due date for the reply until the filing of a grantable petition pursuant to 37 CFR 1.137(b) was unintentional; and (4) any terminal disclaimer (and fee as set forth in 37 CFR 1.20(d)) required by 37 CFR 1.137(d).

The petition satisfies the conditions for revival pursuant to 37 CFR 1.137(b) by including (1) a reply in the form of payment of the Issue and Publication fees, (2) a petition fee of $1620, and (3) a Statement of unintentional delay. The reply to the Notice is accepted as having been unintentionally delayed.

There is no indication that the person signing the instant Petition was given a power of attorney or authorization of agent to prosecute the Application. Further, it is not apparent whether the signer of the Petition was in a position to have firsthand knowledge of the facts and circumstances of the delay at issue. Nevertheless, such statement is being treated as having been made as the result of a reasonable inquiry into the facts and circumstances of the delay. *See,* 37 CFR 10.18(b) and Changes to Patent Practice and

Procedure; Final Rule Notice, 62 Fed. Reg. 53131, 53178 (10 October 1997), 1203 Off. Gaz. Pat. Office 63, 103 (21 October 1997). In the event that such an inquiry has not been made, Petitioner must make such an inquiry. If such inquiry results in the discovery that it is not correct that the entire delay in filing the required reply from the due date for the reply until the filing of a grantable petition pursuant to 37 CFR 1.137(b) was unintentional, Petitioner must notify the Office.

General inquiries relating to this decision should be directed to Robert DeWitty, Petitions Examiner, Office of Petitions (571-272-8427).

The application file will be referred to Office of Data Management for further action.

David Bucci
Petitions Examiner
Office of Petitions

UNITED STATES PATENT AND TRADEMARK OFFICE

Commissioner for Patents
United States Patent and Trademark Office
P.O. Box 1450
Alexandria, VA 22313-1450
www.uspto.gov

SYNECOR LLC
P.O. BOX 5325
LARKSPUR CA 94977

MAILED
DEC 21 2010
OFFICE OF PETITIONS

In re Application of	:	
Robert E. WELT et al.	:	
Application No. 12/469,071	:	DECISION ON PETITION
Filing Date: May 20, 2009	:	
Attorney Docket No. TRX-1120	:	

This is a decision on the petition under the unintentional provisions of 37 CFR 1.137(b), filed December 01, 2010, to revive the above-identified application.

The petition is **GRANTED**.

The application became abandoned for failure to reply in a timely manner to the Notice to File Corrected Application Papers mailed February 18, 2010. The Notice set a period for reply of two (2) months from the mail date of the Notice. No extensions of time under the provisions of 37 CFR 1.136(a) was obtained. Accordingly, the application became abandoned on October 30, 2008. The Notice of Abandonment was mailed April 19, 2010.

The petition satisfies the requirements of 37 CFR 1.137(b) in that petitioner has supplied (1) the reply in the form of replacement drawings; (2) the petition fee of $810; and (3) a proper statement of unintentional delay. Accordingly, the reply to the Notice to File Corrected Application Papers of February 18, 2010 is accepted as having been unintentionally delayed.

It is not apparent whether the person signing the statement of unintentional delay was in a position to have firsthand or direct knowledge of the facts and circumstances of the delay at issue. Nevertheless, such statement is being treated as having been made as the result of a reasonable inquiry into the facts and circumstances of such delay. See 37 CFR 10.18(b) and Changes to Patent Practice and Procedure; Final Rule Notice, 62 Fed. Reg. 53131, 53178 (October 10, 1997), 1203 Off. Gaz. Pat. Office 63, 103 (October 21, 1997). In the event that such an inquiry has not been made, petitioner must make such an inquiry. If such inquiry results

in the discovery that it is not correct that the entire delay in filing the required reply from the due date for the reply until the filing of a grantable petition pursuant to 37 CFR 1.137(b) was unintentional, petitioner must notify the Office.

Telephone inquiries concerning this decision should be directed to Michelle R. Eason at 571-272-4231.

This application is being referred to the Office of Patent Application Processing for further processing.

Michelle R. Eason
Paralegal Specialist
Office of Petitions

UNITED STATES PATENT AND TRADEMARK OFFICE

Commissioner for Patents
United States Patent and Trademark Office
P.O. Box 1450
Alexandria, VA 22313-1450
www.uspto.gov

Decision Date : March 23, 2012

In re Application of :

Dusan Berlec

Application No : 12469165

Filed : 20-May-2009

Attorney Docket No : 211,159

DECISION ON REQUEST TO WITHDRAW AS ATTORNEY/AGENTOF RECORD

This is an electronic decision on the Request to Withdraw as attorney or agent of record under 37 CFR§ 1.36(b), filed March 23, 2012

The request is **APPROVED**

The request was signed by J. David Dainow (registration no. 22959) on behalf of all attorneys/agents associated with Customer Number 38137 . All attorneys/agents associated with Customer Number 38137 have been withdrawn.

Since there are no remaining attorneys of record, all future communications from the Office will be directed to the first named inventor or assignee that has properly made itself of record pursuant to 37 CFR 3.71, with Customer number 38137 .

As a reminder, requester is required to inform the first named inventor or assignee that has properly made itself of record pursuant to 37 CFR 3.71 of the electronically processed petition.

Telephone inquiries concerning this decision should be directed to the Patent Electronic Business Center (EBC) at 866-217-9197.

Office of Petitions

Doc Code: PET.AUTO **Document Description: Petition automatically granted by EFS-Web**	PTO/SB/83 U.S. Patent and Trademark Office Department of Commerce

Electronic Petition Request	**REQUEST FOR WITHDRAWAL AS ATTORNEY OR AGENT AND CHANGE OF CORRESPONDENCE ADDRESS**
Application Number	12469165
Filing Date	20-May-2009
First Named Inventor	Dusan Berlec
Art Unit	3622
Examiner Name	LUIS BROWN
Attorney Docket Number	211,159
Title	Gaming System and Game Controller

◉ Please withdraw me as attorney or agent for the above identified patent application and the practitioners of record associated with Customer Number: 38137

The reason(s) for this request are those described in 37 CFR:

10.40(b)(4)

Certifications

☒ I/We have given reasonable notice to the client, prior to the expiration of the response period, that the practitioner(s) intend to withdraw from employment

☒ I/We have delivered to the client or a duly authorized representative of the client all papers and property (including funds) to which the client is entitled

☒ I/We have notified the client of any responses that may be due and the time frame within which the client must respond

Change the correspondence address and direct all future correspondence to:
The address of the first named inventor or assignee that has properly made itself of record pursuant to 37 CFR 3.71, associated with Customer Number: 38137

I am authorized to sign on behalf of myself and all withdrawing practitioners.

Signature	/J. David Dainow/
Name	J. David Dainow
Registration Number	22959

Doc Code: PET.RELIEF
Document Description: Certification and Request for Japan Events Relief

PTO/SB/425 (03-11)

CERTIFICATION AND REQUEST FOR RELIEF DUE TO EVENTS OF MARCH 11, 2011, IN JAPAN (Page 1 of 2)

Nonprovisional Application Number or Control Number (if applicable): 12/469,178	Patent Number (if applicable):
First Named Inventor: Katsuhiko SHIMIZU	Title of Invention: METHOD FOR PRODUCING RIGID POLYURETHANE FOAM, AND RIGID POLYURETHANE FOAM

APPLICANT/PATENTEE/REEXAMINATION PARTY HEREBY CERTIFIES AND REQUESTS THE FOLLOWING FOR THE ABOVE-IDENTIFIED APPLICATION/PATENT/REEXAMINATION PROCEEDING.

1. FOR PATENT APPLICATIONS AND REEXAMINATION PROCEEDINGS PENDING IN THE USPTO AS OF MARCH 11, 2011, IN WHICH A COMMUNICATION FROM THE USPTO IS SOUGHT TO BE REMAILED:

   a. One or more inventors, an assignee, or a correspondence address (for the application/proceeding) is in an area of Japan affected by the earthquake and/or tsunami of March 11, 2011.

   b. A reply or response to an Office action (final, non-final, or other), a notice of allowance, or other Office notice (hereinafter collectively referred to as "Office communication") is outstanding.

   c. The statutory or non-statutory time period set for response has not yet expired.

   d. Withdrawal and reissuance of the Office communication is requested.

   e. It is acknowledged that if this request is not made within sufficient time so that withdrawal and reissuance of the Office communication occur prior to expiration of the statutory or non-statutory time period (as permitted to be extended under 37 CFR 1.136(a), or as extended under 37 CFR 1.550(c) or 1.956), this request may not be granted.

   f. The need for the reissuance of the Office communication was due to the effects of the earthquake and/or tsunami of March 11, 2011.

   g. This request is being sent via EFS-Web or by mail directed to Mail Stop Petition, Commissioner for Patents, P.O. Box 1450, Alexandria, VA 22313-1450.

2. FOR PATENTEES WHO WERE UNABLE TO TIMELY PAY A PATENT MAINTENANCE FEE DURING THE SIX-MONTH GRACE PERIOD FOLLOWING THE WINDOW TO PAY THE MAINTENANCE FEE:

   a. The original window of time to pay the maintenance fee without the surcharge required by 37 CFR 1.20(h) expired on or after March 11, 2011.

   b. The delay in paying the fee was due to the effects of the earthquake and/or tsunami of March 11, 2011.

   c. The USPTO is requested to *sua sponte* waive the surcharge in 37 CFR 1.20(h) for paying a maintenance fee during the six-month grace period following the window to pay the maintenance fee.

   d. This request and payment of the maintenance fee during the six-month grace period following the window to pay the maintenance fee is being mailed to: Director of the United States Patent and Trademark Office, Attn: Maintenance Fee, 2051 Jamieson Avenue, Suite 300, Alexandria, VA 22314; or being transmitted via facsimile to: 571-273-6500.

CERTIFICATION AND REQUEST FOR RELIEF DUE TO EVENTS OF MARCH 11, 2011, IN JAPAN (Page 2 of 2)

3. FOR PATENTEES WHO NEED TO FILE A PETITION TO ACCEPT A DELAYED MAINTENANCE FEE PAYMENT UNDER 37 CFR 1.378(c):

   a. The maintenance fee payment was required to have been paid after March 10, 2011.

   b. A petition under 37 CFR 1.378(c) (using USPTO form PTO/SB/66 – Petition to Accept Unintentionally Delayed Payment of Maintenance Fee in an Expired Patent (37 CFR 1.378(c))) is being promptly filed accompanied by the applicable maintenance fee payment (but not the surcharge under 37 CFR 1.20(i)).

   c. The delay in payment of the maintenance fee was due to the effects of the earthquake and/or tsunami of March 11, 2011.

   d. The USPTO is requested to *sua sponte* waive the surcharge in 37 CFR 1.20(i) for accepting a delayed maintenance fee payment.

   e. It is acknowledged that the petition to accept a delayed maintenance fee payment under 37 CFR 1.378(c) must be filed by March 11, 2012, in order to be entitled to a waiver of the surcharge under 37 CFR 1.20(i).

   f. It is acknowledged that the petition to accept a delayed maintenance fee payment under 37 CFR 1.378(c) must be filed within twenty-four months from the expiration date of the patent. *See* 35 U.S.C 41(c).

   g. This request and the petition to accept a delayed maintenance fee payment under 37 CFR 1.378(c) is being submitted via EFS-Web or by mail directed to Mail Stop Petition, Commissioner for Patents, P.O. Box 1450, Alexandria, VA 22313-1450.

4. FOR NONPROVISIONAL PATENT APPLICATIONS FILED WITHOUT AN EXECUTED OATH OR DECLARATION OR PAYMENT OF THE BASIC FILING FEE, SEARCH FEE, AND/OR EXAMINATION FEE:

   a. The nonprovisional patent application was filed on or after March 11, 2011, and prior to April 12, 2011.

   b. The late filing of the oath or declaration or the basic filing fee, search fee, or examination fee was due to the effects of the earthquake and/or tsunami of March 11, 2011.

   c. The USPTO is requested to *sua sponte* waive the surcharge set forth in 37 CFR 1.16(f) for the late filing of the oath or declaration or basic filing fee, search fee, and/or examination fee.

   d. This request, together with the executed oath or declaration or the basic filing fee, search fee, or examination fee, as well as the reply to the Notice to File Missing Parts, is being submitted via EFS-Web or by mail directed to Mail Stop Missing Parts, Commissioner for Patents, P.O. Box 1450, Alexandria, VA 22313-1450.

Signature	Date 4/4/12
Name (Print/Typed) J. Derek Mason, Ph.D.	Practitioner Registration Number 35,270

Note: *Signatures of all the inventors, § 1.41(b) applicants, or assignees of record of the entire interest or their representative(s), or reexamination requesters at the appeal stage are required in accordance with 37 CFR 1.33 and 11.18. Please see 37 CFR 1.4(d) for the form of the signature. If necessary, submit multiple forms for more than one signature, see below*.*

☒ *Total of 1 forms are submitted.

UNITED STATES PATENT AND TRADEMARK OFFICE

Commissioner for Patents
United States Patent and Trademark Office
P.O. Box 1450
Alexandria, VA 22313-1450
www.uspto.gov

OBLON, SPIVAK, MCCLELLAND MAIER & NEUSTADT, L.L.P.
1940 DUKE STREET
ALEXANDRIA VA 22314

MAILED

APR 07 2011

OFFICE OF PETITIONS

In re Application of :
Shimizu et al. :
Application No. 12/469,178 : DECISION ON PETITION
Filed: May 20, 2009 :
Attorney Docket No. 342277US0CONT :

This is a decision on the request filed April 4, 2011, seeking relief under the provisions of an announcement by the Under Secretary and Director of the United States Patent and Trademark Office on March 17, 2011, http://www.uspto.gov/patents/announce/japan_relief_2011mar17.pdf, providing relief to inventors and patent owners in areas affected by the earthquake and resulting tsunami of March 11, 2011.

The request for relief is **GRANTED**.

In the above-identified application, an Office action was mailed on March 7, 2011. The instant petition was filed prior to the expiration of the period for reply and the certifications for granting of relief are considered to be met by the submission of the request.

Telephone inquires concerning this decision should be directed to the undersigned at 571-272-7751. All other inquires concerning either the examination or status of the application should be directed to the Technology Center.

This application is being referred to the Technology Center, Art Unit 1765 for re-mailing the Office action of March 7, 2011. The period for reply will run from the mailing date of the Office action.

/Joan Olszewski/
Joan Olszewski
Petitions Examiner
Office of Petitions

SPE RESPONSE FOR CERTIFICATE OF CORRECTION

Paper No.:1110

DATE : October 12, 2011

TO SPE OF : ART UNIT 2833

SUBJECT : Request for Certificate of Correction on Patent No.: 8007314

A response is requested with respect to the accompanying request for a certificate of correction.

Please complete this form and return with file, within **7** days to:
Certificates of Correction Branch - ST (South Tower) 9A22
Palm location **7590** - Tel. No. (703) 305-8309

With respect to the change(s) requested, correcting Office and/or Applicant's errors, should the patent read as shown in the certificate of correction? No new matter should be introduced, nor should the scope or meaning of the claims be changed.

Thank You For Your Assistance **Certificates of Correction Branch**

The request for issuing the above-identified correction(s) is hereby:

Note your decision on the appropriated box.

☒ **Approved** All changes apply.

☐ **Approved in Part** Specify below which changes **do not** apply.

☐ **Denied** State the reasons for denial below.

Comments:

error was the fault of the Office & should be corrected

/renee s luebke/
Renee Luebke - SPE - AU 2833

PTO/SB/20PCT-US (09-10)
Approved for use through 01/31/2012. OMB 0651-0058
U.S. Patent and Trademark Office; U. S. DEPARTMENT OF COMMERCE
Under the Paperwork Reduction Act of 1995, no persons are required to respond to a collection of information unless it displays a valid OMB control number.

REQUEST FOR PARTICIPATION IN THE PATENT COOPERATION TREATY - PATENT PROSECUTION HIGHWAY (PCT-PPH) PILOT PROGRAM IN A U.S. APPLICATION WHERE THE USPTO WAS THE ISA OR IPEA

Application No:	12/469,350	Filing date:	May 20, 2009
First Named Inventor:	Roberto WENZEL		
Title of the Invention:	METHODS AND SYSTEMS FOR SINGLE SIGN ON WITH DYNAMIC AUTHENTICATION LEVELS		

THIS REQUEST FOR PARTICIPATION IN THE PCT-PPH PILOT PROGRAM ALONG WITH THE REQUIRED DOCUMENTS MUST BE SUBMITTED VIA EFS-WEB. INFORMATION REGARDING EFS-WEB IS AVAILABLE AT HTTP://WWW.USPTO.GOV/EBC/EFS_HELP.HTML

APPLICANT HEREBY REQUESTS PARTICIPATION IN THE PCT-PPH PROGRAM AND PETITIONS TO MAKE THE ABOVE-IDENTIFIED APPLICATION SPECIAL UNDER THE PCT-PPH PROGRAM.

The above-identified application is (1) a national stage entry of the corresponding PCT application, or (2) a national stage entry of another PCT application which claims priority to the corresponding PCT application, or (3) a national application that claims domestic/ foreign priority to the corresponding PCT application, or (4) a national application which forms the basis for the priority claim in the corresponding PCT application, or (5) a continuing application of a U.S. application that satisfies one of (1) to (4) above, or (6) a U.S. application that claims domestic benefit to a U.S. provisional application which forms the basis for the priority claim in the corresponding PCT application.

The corresponding PCT application number(s) is/are: PCT/US2009/044792

The international date of the corresponding PCT application(s) is/are:

May 21, 2009

I. List of Required Documents:

a. **A copy of the latest international work product (WO/ISA, WO/IPEA, or IPER) in the above–identified corresponding PCT application(s)**

- [x] Is attached
- [ ] Is not attached because the document is already in the U.S. application.

b. **A copy of all claims which were indicated as having novelty, inventive step and industrial applicability in the above-identified corresponding PCT application(s).**

- [x] Is attached.
- [ ] Is not attached because the document is already in the U.S. application.

c. **English translations of the documents in a. and b. above are attached (if the documents are not in the English language). A statement that the English translation is accurate is attached for the document in b. above.**

This collection of information is required by 35 U.S.C. 119, 37 CFR 1.55, and 37 CFR 1.102(d). The information is required to obtain or retain a benefit by the public, which is to file (and by the USPTO to process) an application. Confidentiality is governed by 35 U.S.C. 122 and 37 CFR 1.11 and 1.14. This collection is estimated to take 2 hours to complete, including gathering, preparing, and submitting the completed application form to the USPTO. Time will vary depending upon the individual case. Any comments on the amount of time you require to complete this form and/or suggestions for reducing this burden should be sent to the Chief Information Officer, U.S. Patent and Trademark Office, U.S. Department of Commerce, P.O. Box 1450, Alexandria, VA 22313-1450. DO NOT SEND FEES OR COMPLETED FORMS TO THIS ADDRESS.

Under the Paperwork Reduction Act of 1995, no persons are required to respond to a collection of information unless it displays a valid OMB control number.

REQUEST FOR PARTICIPATION IN THE PCT-PPH PILOT PROGRAM IN A U.S. APPLICATION WHERE THE USPTO WAS THE ISA OR IPEA (continued)

Application No.:	12/469,350
First Named Inventor:	Roberto WENZEL

d. **(1) An information disclosure statement listing the documents cited in the international work products (ISR, WO/ISA, WO/IPEA, IPER) of the corresponding PCT application.**

- [x] Is attached
- [ ] Has already been filed in the above-identified U.S. application on _____

(2) Copies of all documents (except) for U.S. patents or U.S. patent application publications)

- [x] Are attached.
- [ ] Have already been filed in the above-identified U.S. application on _____

II. Claims Correspondence Table:

Claims in US Application	Patentable Claims in the corresponding PCT Application	Explanation regarding the correspondence
1	1	The claims are identical
2	2	The claims are identical
3	3	The claims are identical
4	4	The claims are identical
5	5	The claims are identical
6	6	The claims are identical
7	7	The claims are identical
8	8	The claims are identical
9	9	The claims are identical
10	10	The claims are identical
11	11	The claims are identical
12	12	The claims are identical
13	13	The claims are identical
14	14	The claims are identical
15	15	The claims are identical
16	16	The claims are identical
17	17	The claims are identical
18	18	The claims are identical
19	19	The claims are identical

III. All the claims in the US application sufficiently correspond to the patentable claims in the corresponding PCT application.

Signature Irah Donner	Date 8/22/11
Name (Print/Typed) Irah H. Donner	Registration Number 35,120

II. Claims Correspondence Table (cont'd)

Claims in U.S. Application	Patentable Claims in the corresponding PCT Application	Explanation regarding the correspondence
20	20	The claims are identical
21	21	The claims are identical
22	22	The claims are identical
23	23	The claims are identical
24	24	The claims are identical
25	25	The claims are identical
26	26	The claims are identical
27	27	The claims are identical
28	28	The claims are identical
29	29	The claims are identical
30	30	The claims are identical
31	31	The claims are identical
32	32	The claims are identical
33	33	The claims are identical
34	34	The claims are identical
35	35	The claims are identical
36	36	The claims are identical
37	37	The claims are identical
38	38	The claims are identical
39	39	The claims are identical
40	40	The claims are identical
41	41	The claims are identical
42	42	The claims are identical
43	43	The claims are identical
44	44	The claims are identical
45	45	The claims are identical

UNITED STATES PATENT AND TRADEMARK OFFICE

UNITED STATES DEPARTMENT OF COMMERCE
United States Patent and Trademark Office
Address: COMMISSIONER FOR PATENTS
P.O. Box 1450
Alexandria, Virginia 22313-1450
www.uspto.gov

APPLICATION NO.	FILING DATE	FIRST NAMED INVENTOR	ATTORNEY DOCKET NO.	CONFIRMATION NO.
12/469,350	05/20/2009	Roberto WENZEL	002874/0022	1738

26610 7590 09/23/2011
STROOCK & STROOCK & LAVAN LLP
180 MAIDEN LANE
NEW YORK, NY 10038

EXAMINER
REVAK, CHRISTOPHER A

ART UNIT	PAPER NUMBER
2431	

MAIL DATE	DELIVERY MODE
09/23/2011	PAPER

Please find below and/or attached an Office communication concerning this application or proceeding.

The time period for reply, if any, is set in the attached communication.

UNITED STATES PATENT AND TRADEMARK OFFICE

Commissioner for Patents
United States Patent and Trademark Office
P.O. Box 1450
Alexandria, VA 22313-1450
www.uspto.gov

STROOCK & STROOCK & LAVAN LLP
180 MAIDEN LANE
NEW YORK NY 10038

In re Application of: WENZEL, ROBERTO et al.
Application No. 12/469,350
Filed: May 20, 2009
For: METHODS AND SYSTEMS FOR SINGLE SIGN ON WITH DYNAMIC AUTHENTICATION LEVELS

DECISION ON REQUEST TO PARTICIPATE IN PCT-PATENT PROSECUTION HIGHWAY PROGRAM AND PETITION TO MAKE SPECIAL UNDER 37 CFR 1.102(a)

This is a decision on the request to participate in the PCT- Patent Prosecution Highway (PPH) pilot program and the petition under 37 CFR 1.102(a), filed August 2, 2011, to make the above-identified application special.

The petition is **GRANTED.**

A grantable request to participate in the PCT PPH program and petition to make special require:

(1) The relationship between the corresponding U.S. application for which participation in the PCT-PPH pilot program is requested and the PCT application satisfies one of the following:

(a) The U.S. application is a national stage entry of the corresponding PCT application.

(b)The U.S. application is a national application which forms the basis for the priority claim in the corresponding PCT application.

(c) The U.S. application is a national stage entry of another PCT application (which can be filed in any competent receiving office) which claims priority to the corresponding PCT application.

(d) The U.S. application is a national application claiming foreign/domestic priority to the corresponding PCT application.

(e) The U.S. application is a continuing application (continuation, divisional, or continuation-in-part) of the U.S. application which satisfies one of the above (a) to (d) scenarios.

(2) The latest work product in the international phase of the PCT application corresponding to the U.S. application indicates at least one claim in the PCT application has novelty, inventive step and industrial applicability. In case any observation is described in Box VIII of the WO/ISA, or WO/IPEA, or IPER which forms the basis for the PCT-PPH request, applicant must identify and explain why the claim(s) is/are not subject to any observation described in Box VIII irrespective of whether an amendment is submitted to correct the observation described in Box VIII.

(3) All the claims in each U.S. application for which a request for participation in the PCT-PPH pilot program is made must sufficiently correspond to one or more of those claims indicated as having novelty, inventive step and industrial applicability and free of any observation described in Box VIII in the latest work product of the corresponding PCT application.

(4) Substantive examination of the U.S. application for which participation in the PCT-PPH pilot program is requested has not begun.

(5) Applicant must submit a copy of the latest international work product which indicated that the claim(s) has/have novelty, inventive step and industrial applicability along with an English translation thereof if the copy of the latest international work product is not in the English language.

(6) Applicant must submit a copy of the claims from the corresponding PCT application which were indicated as having novelty, inventive step and industrial applicability in the latest work product of the PCT application along with an English translation thereof and a statement that the English translation is accurate if the claims are not in the English language. Applicant is required to submit a claims correspondence table in English. The claims correspondence table must indicate how all the claims in the U.S. application sufficiently correspond to the claims indicated as having novelty, inventive step and industrial applicability in the latest international work product. *If the claims in the U.S. application for which participation in the PCT-PPH pilot program is requested are identical to the claims from the corresponding PCT application, and are in the English language, applicant may just indicate such in the PCT-PPH request and it will not be necessary for applicant to submit a copy of the claims from the corresponding PCT application.*

(7) Applicant must submit an information disclosure statement (IDS) listing the documents cited in the international work products (ISR, WOIISA, WOIIPEA, PER) of the PCT.

(8) The request for participation in the PCT-PPH pilot program and all the supporting documents must be submitted to the USPTO via EFS-Web and indexed with the following document description: "Petition to make special under PCT-Patent Pros Hwy. Any preliminary amendments and IDS submitted with the PCT-PPH documents must be separately indexed as a preliminary amendment and IDS, respectively.

The request to participate in the PCT-PPH program and petition comply with all the above requirements. Accordingly, the above-identified application has been accorded "special" status.

Telephone inquiries concerning this decision should be directed to Aaron Strange at 571-272-3959.

All other inquiries concerning the examination or status of the application is accessible in the PAIR system at http://www.uspto.gov/ebc/index.html.

The application is being forwarded to the examiner for action on the merits commensurate with this decision

/Christopher Grant/
Christopher Grant
Quality Assurance Specialist
Technology Center 2400

PATENT

IN THE UNITED STATES PATENT AND TRADEMARK OFFICE

IN THE APPLICATION OF:

LESLIE RAYMOND WOLF

CASE NO.: CL4970USNA

APPLICATION NO.: 12/469373

CONFIRMATION NO.: 1781

GROUP ART UNIT: 2123

EXAMINER:

FILED: MAY 20, 2009

FOR: PROCESS FOR DETERMINING THE DISTILLATION CHARACTERISTICS OF A LIQUID PETROLEUM PRODUCT CONTAINING AN AZEOTROPIC MIXTURE

PETITION TO MAKE SPECIAL
STATEMENT OF SPECIAL STATUS AND REQUEST TO PARTICIPATE IN THE GREEN TECHNOLOGY PILOT PROGRAM

VIA EFS-WEB

Commissioner for Patents
P.O. Box 1450
Alexandria, VA 22313-1450

Dear Sir,

Please find herein a second submission of the above-referenced application for participation in the Green Technology Pilot Program. A previous petition was submitted under the pilot program for applications pertaining to Green Technologies as set forth in Federal Register Notice of December 8, 2009, vol. 74, No 234, pages 64666-64668 and was dismissed. The Decision on Petition dated March 10, 2010 asserted that the application was classified in an area that was not one of the eligible US classifications listed in section VI of the notice and that it was not agreed that the application met the materiality standard on its face.

Re-submitted herewith is the completed USPTO form PTO/SB/420 and a Petition to Make Special pursuant to the Federal Register Notice of December 8, 2009, vol. 74, No 234, pages 64666-64668, as further broadened according to Federal

Register Notice of May 21, 2010, vol. 75, No. 98, pages 28554-28555, to participate in the Green Technology Pilot Program as described in said Notice.

The above-referenced application has been published (U.S. Patent Application Publication No. US-2009-00292512-A1). In accordance with the requirements for the Pilot Program, please charge Deposit Account No. 04-1928 (E.I. du Pont de Nemours and Company) for the publication fee set forth in 37 CFR 1.18(d).

Applicants submit that the application is directed to a single invention that relates to the development of more renewable fuel blends, in that the blends include bio-derived components, like biobutanol, and as such, the claimed invention materially contributes to the discovery or development of renewable energy resources, enhances the quality of the environment and results in a more efficient utilization and conservation of energy resources. By blending fuels with renewable components use of totally petroleum-based fuels is minimized and this has significant environmental and economic impact.

Further, the Application contains fewer than 3 independent claims and contains less than 20 total claims.

If participation in the Green Technology Pilot Program is granted, Applicants hereby agree to make an election without traverse in a telephonic interview and elect an invention that meets the eligibility requirement and classification requirement set forth in the notice entitled "Pilot Program for Green Technologies Including Greenhouse Gas Reduction" that was published in the Federal Register if the Office determines that the claims are not obviously directed to a single invention.

Respectfully submitted,

/Christine M. Lhulier/

CHRISTINE M. LHULIER
ATTORNEY/AGENT FOR
APPLICANTS
Registration No.: 54,269
Telephone: 302-992-5463
Facsimile: (302) 355-3982

Dated: August 31, 2010

Doc Code: PET.GREEN
Document Description: Petition for Green Tech Pilot

PTO/SB/420 (12-09)
Approved for use through 05/31/2010. OMB 0651-0062
U.S. Patent and Trademark Office; U. S. DEPARTMENT OF COMMERCE
Under the Paperwork Reduction Act of 1995, no persons are required to respond to a collection of information unless it displays a valid OMB control number.

PETITION TO MAKE SPECIAL UNDER THE GREEN TECHNOLOGY PILOT PROGRAM

Attorney Docket Number: CL4970USNA	Application Number (if known): 12/469373	Filing date: May 20, 2009

First Named Inventor: LESLIE RAYMOND WOLF

Title: PROCESS FOR DETERMINING THE DISTILLATION CHARACTERISTICS OF A LIQUID PETROLEUM PRODUCT CONTAINING AN AZEOTROPIC MIXTURE

APPLICANT HEREBY REQUESTS TO PARTICIPATE IN THE GREEN TECHNOLOGY PILOT PROGRAM FOR THE ABOVE-IDENTIFIED APPLICATION. See Instruction Sheet on page 2.

This petition must be timely filed electronically using the USPTO electronic filing system, EFS-Web.

1. By filing this petition:

   Applicant is requesting early publication: Applicant hereby requests early publication under 37 CFR 1.219 and the publication fee set forth in 37 CFR 1.18(d) accompanies this request. Applicant hereby rescinds under 37 CFR 1.213(b) any previous filed request that the above-identified application not be published under 35 U.S.C. 122(b).

   If the application has been published, the petition must still be accompanied by the publication fee set forth in 37 CFR 1.18(d) and a statement that the application has been published.

2. By filing this petition: applicant is agreeing to make an election without traverse in a telephonic interview and elect an invention that meets the eligibility requirement and classification requirement set forth in the notice entitled "Pilot Program for Green Technologies Including Greenhouse Gas Reduction" that was published in the Federal Register if the Office determines that the claims are not obviously directed to a single invention.

3. This request is accompanied by statements of special status for the eligibility requirement.

4. The application contains no more than three (3) independent claims and twenty (20) total claims.

5. The application does not contain any multiple dependent claims.

6. Other attachments: (1) Statement of Special Status and Request To Participate

Signature /Christine M. Lhulier/	Date August 31, 2010
Name (Print/Typed) Christine M. Lhulier	Registration Number 54,269

***Note**: Signatures of all the inventors or assignees of record of the entire interest or their representative(s) are required in accordance with 37 CFR 1.33 and 11.18. Please see 37 CFR 1.4(d) for the form of the signature. If necessary, submit multiple forms for more than one signature, see below*:*

☒ *Total of 1 forms are submitted.

The information is required to obtain or retain a benefit by the public which is to file (and by the USPTO to process) an application. Confidentiality is governed by 35 U.S.C. 122 and 37 CFR 1.11 and 1.14. This collection is estimated to take 12 hours to complete, including gathering, preparing, and submitting the completed application form to the USPTO. Time will vary depending upon the individual case. Any comments on the amount of time you require to complete this form and/or suggestions for reducing this burden, should be sent to the Chief Information Officer, U.S. Patent and Trademark Office, U.S. Department of Commerce, P.O. Box 1450, Alexandria, VA 22313-1450. DO NOT SEND FEES OR COMPLETED FORMS TO THIS ADDRESS. **SEND TO: Commissioner for Patents, P.O. Box 1450, Alexandria, VA 22313-1450.**

If you need assistance in completing the form, call 1-800-PTO-9199 and select option 2.

Under the Paperwork Reduction Act of 1995, no persons are required to respond to a collection of information unless it displays a valid OMB control number.

Instruction Sheet for Petition to Make Special Under the Green Technology Pilot Program

(Not to be Submitted to the USPTO)

The following is a summary of the requirements (for more information see notice "Pilot Program for Green Technologies Including Greenhouse Gas Reduction" available on the USPTO web site at http://www.uspto.gov/web/offices/pac/dapp/ogsheet.html):

(1) The application must be a non-reissue, non-provisional utility application filed under 35 U.S.C. 111(a), or an international application that has entered the national stage in compliance with 35 U.S.C. 371. The application must be previously filed before the publication date of the notice cited above. Reexamination proceedings are excluded from this pilot program.

(2) The application must be classified in one of the U.S. classifications listed in section VI of the notice cited above at the time of examination.

(3) The application must contain three or fewer independent claims and twenty or fewer total claims. The application must not contain any multiple dependent claims. For an application that contains more than three independent claims or twenty total claims, or multiple dependent claims, applicant must file a preliminary amendment in compliance with 37 CFR 1.121 to cancel the excess claims and/or the multiple dependent claims at the time the petition to make special is filed.

(4) The claims must be directed to a single invention that materially enhances the quality of the environment, or that materially contributes to: (1) the discovery or development of renewable energy resources; (2) the more efficient utilization and conservation of energy resources; or (3) green house gas emission reduction (see the eligibility requirements of sections II and III of the notice cited above). The petition must include a statement that, if the USPTO determines that the claims are directed to multiple inventions (e.g., in a restriction requirement), applicant will agree to make an election without traverse in a telephonic interview, and elect an invention that meets the eligibility requirements in section II or III of the notice cited above and is classified in one of the U.S. classifications listed in section VI of the notice cited above.

(5) The petition to make special must be timely filed electronically using the USPTO electronic filing system, EFS-Web, and selecting the document description of "Petition for Green Tech Pilot" on the EFS-Web screen. Applicant should use form PTO/SB/420, which will be available as a Portable Document Format (PDF) fillable form in EFS-Web and on the USPTO Web site.

(6) The petition to make special must be filed at least one day prior to the date that a first Office action (which may be an Office action containing only a restriction requirement) appears in the Patent Application Information Retrieval (PAIR) system. Applicant may check the status of the application using PAIR.

(7) The petition to make special must be accompanied by a request for early publication in compliance with 37 CFR 1.219 and the publication fee set forth in 37 CFR 1.18(d).

Privacy Act Statement

The **Privacy Act of 1974 (P.L. 93-579)** requires that you be given certain information in connection with your submission of the attached form related to a patent application or patent. Accordingly, pursuant to the requirements of the Act, please be advised that: (1) the general authority for the collection of this information is 35 U.S.C. 2(b)(2); (2) furnishing of the information solicited is voluntary; and (3) the principal purpose for which the information is used by the U.S. Patent and Trademark Office is to process and/or examine your submission related to a patent application or patent. If you do not furnish the requested information, the U.S. Patent and Trademark Office may not be able to process and/or examine your submission, which may result in termination of proceedings or abandonment of the application or expiration of the patent.

The information provided by you in this form will be subject to the following routine uses:

1. The information on this form will be treated confidentially to the extent allowed under the Freedom of Information Act (5 U.S.C. 552) and the Privacy Act (5 U.S.C 552a). Records from this system of records may be disclosed to the Department of Justice to determine whether disclosure of these records is required by the Freedom of Information Act.

2. A record from this system of records may be disclosed, as a routine use, in the course of presenting evidence to a court, magistrate, or administrative tribunal, including disclosures to opposing counsel in the course of settlement negotiations.

3. A record in this system of records may be disclosed, as a routine use, to a Member of Congress submitting a request involving an individual, to whom the record pertains, when the individual has requested assistance from the Member with respect to the subject matter of the record.

4. A record in this system of records may be disclosed, as a routine use, to a contractor of the Agency having need for the information in order to perform a contract. Recipients of information shall be required to comply with the requirements of the Privacy Act of 1974, as amended, pursuant to 5 U.S.C. 552a(m).

5. A record related to an International Application filed under the Patent Cooperation Treaty in this system of records may be disclosed, as a routine use, to the International Bureau of the World Intellectual Property Organization, pursuant to the Patent Cooperation Treaty.

6. A record in this system of records may be disclosed, as a routine use, to another federal agency for purposes of National Security review (35 U.S.C. 181) and for review pursuant to the Atomic Energy Act (42 U.S.C. 218(c)).

7. A record from this system of records may be disclosed, as a routine use, to the Administrator, General Services, or his/her designee, during an inspection of records conducted by GSA as part of that agency's responsibility to recommend improvements in records management practices and programs, under authority of 44 U.S.C. 2904 and 2906. Such disclosure shall be made in accordance with the GSA regulations governing inspection of records for this purpose, and any other relevant (*i.e.*, GSA or Commerce) directive. Such disclosure shall not be used to make determinations about individuals.

8. A record from this system of records may be disclosed, as a routine use, to the public after either publication of the application pursuant to 35 U.S.C. 122(b) or issuance of a patent pursuant to 35 U.S.C. 151. Further, a record may be disclosed, subject to the limitations of 37 CFR 1.14, as a routine use, to the public if the record was filed in an application which became abandoned or in which the proceedings were terminated and which application is referenced by either a published application, an application open to public inspection or an issued patent.

9. A record from this system of records may be disclosed, as a routine use, to a Federal, State, or local law enforcement agency, if the USPTO becomes aware of a violation or potential violation of law or regulation.

UNITED STATES PATENT AND TRADEMARK OFFICE

UNITED STATES DEPARTMENT OF COMMERCE
United States Patent and Trademark Office
Address: COMMISSIONER FOR PATENTS
P.O. Box 1450
Alexandria, Virginia 22313-1450
www.uspto.gov

APPLICATION NO.	FILING DATE	FIRST NAMED INVENTOR	ATTORNEY DOCKET NO.	CONFIRMATION NO.
12/469,373	05/20/2009	Leslie R. Wolf	39390-00	1781

7590 09/14/2010
E.I. DuPont De Nemours and Company
4417 Lancaster Pike, Barley Mill Plaza 25/1212
Wilmington, DE 19805

EXAMINER	
ART UNIT	PAPER NUMBER
2123	

MAIL DATE	DELIVERY MODE
09/14/2010	PAPER

Please find below and/or attached an Office communication concerning this application or proceeding.

The time period for reply, if any, is set in the attached communication.

UNITED STATES PATENT AND TRADEMARK OFFICE

Commissioner for Patents
United States Patent and Trademark Office
P.O. Box 1450
Alexandria, VA 22313-1450
www.uspto.gov

E.I. DuPont De Nemours and Company
4417 Lancaster Pike, Barley Mill Plaza 25/1212
Wilmington DE 19805

In re Application of	:	
WOLF, Leslie	:	DECISION ON PETITION
Application No. 12/469,373	:	TO MAKE SPECIAL UNDER
Filed: May 20, 2009	:	THE GREEN TECHNOLOGY
Attorney Docket No. 39390-00		PILOT PROGRAM

This is a decision on the renewed petition under 37 CFR 1.102, filed August 31, 2010, to make the above-identified application special under the pilot program for applications pertaining to Green Technologies as set forth in 74 Federal Register Notice 64666 (December 8, 2009) and amended by 75 Federal Register Notice 28554 (May 21, 2010).

The petition is **GRANTED**.

A grantable petition to make an application special under 37 CFR 1.102 and the pilot program as set forth in 74 FR 64666 must be directed to a nonprovisional application filed under 35 USC 111(a) or be a national stage entry under 35 USC 371, exclusive of any reissue applications and be filed prior to the date of the notice, December 8, 2009.

In order to qualify for special status, the following requirements must be met. 1) The application must have no more than 3 independent claims and no more than 20 total claims. 2) The application must not contain any multiple dependent claims. 3) The petition must state the basis for seeking special status, i.e., the claimed invention either: A) materially enhances the quality of the environment or B) materially contributes to: i) the discovery or development of renewable energy resources, ii) the more efficient utilization and conservation of energy resources, or iii) greenhouse gas emission reduction. 4) If the disclosure is not clear on its face that the claimed invention materially contributes under category (A) or (B), the petition must be accompanied by a statement by the applicant, assignee, or an attorney/agent registered to practice before the Office explaining how the materiality standard is met. 5) A statement that applicant will agree to make an election without traverse in a telephonic interview if a restriction requirement is made by the examiner. 6) The petition to make special must be filed electronically. 7) The petition must be filed at least one day prior to the date that a first Office Action appears in the Patent

Application Information Retrieval (PAIR) system. 8) The petition must be accompanied by a request for early publication in compliance with 37 CFR 1.219 and include the publication fee as set forth in 37 CFR 1.18(d).

The requirement for a fee for consideration of the petition to make special for applications pertaining to Green Technologies has been waived.

The instant petition complies with items 1 – 8 above. Accordingly, the above-identified application has been accorded "special" status.

The application is being forwarded to the Technology Center Art Unit 2123 for action on the merits commensurate with this decision.

Telephone inquires concerning this decision should be directed to Eddie C. Lee at 571-272-1732.

/Eddie C. Lee/

Eddie C. Lee
Quality Assurance Specialist
Technology Center 2100

UNITED STATES PATENT AND TRADEMARK OFFICE

Commissioner for Patents
United States Patent and Trademark Office
P.O. Box 1450
Alexandria, VA 22313-1450
www.uspto.gov

Sprinkle IP Law Group/Zimmer
1301 W. 25th Street
Suite 408
Austin, TX 78705

MAILED

NOV 08 2010

OFFICE OF PETITIONS

In re Application of	:	
Karl Pierre Belliard	:	
Application No. 12/469,414	:	DECISION ON PETITION
Filed: May 20, 2009	:	TO WITHDRAW
Attorney Docket No. **ZIMM2280-US**	:	FROM RECORD
	:	

This is a decision on the Request to Withdraw as attorney or agent of record under 37 CFR § 1.36(b), filed September 23, 2010.

The request is **NOT APPROVED** as moot.

A review of the file record indicates that the power of attorney to attorneys/agents associated with Customer Number 44654 has been revoked by the applicants of the patent application on October 4, 2010. Accordingly, the request to withdraw under 37 CFR § 1.36(b) is moot.

All future communications from the Office will continue to be directed to the below-listed address until otherwise notified by applicant.

Telephone inquires concerning this decision should be directed to the undersigned at 571-272-4584.

/JoAnne Burke/
JoAnne Burke
Petitions Examiner
Office of Petitions

cc: SEAGER, TUFTE & WICKHEM, LLC
1221 NICOLLET AVENUE
SUITE 800
MINNEAPOLIS MN 55403-2420

UNITED STATES PATENT AND TRADEMARK OFFICE

Commissioner for Patents
United States Patent and Trademark Office
P.O. Box 1450
Alexandria, VA 22313-1450
www.uspto.gov

LUCE, FORWARD, HAMILTON & SCRIPPS, LLC
2050 MAIN STREET, SUITE 600
IRVINE, CA 92614

MAILED

OCT 18 2010

OFFICE OF PETITIONS

In re Application of	:	DECISION ON PETITION
Ferrera et al.	:	TO WITHDRAW
Application No. 12/469,462	:	FROM RECORD
Filed: May 20, 2009	:	
Attorney Docket No. MDFR.008A	:	

This is a decision on the Request to Withdraw as attorney or agent of record under 37 C.F.R. § 1.36(b), filed September 10, 2010.

The request is **DISMISSED** as involving a moot issue.

A review of the file record indicates that the power of attorney to the attorneys/agents associated with Customer Number 86451 was revoked by the assignee of the patent application on September 20, 2010. Accordingly, the request to withdraw under 37 C.F.R. § 1.36(b) is moot.

All future communications from the Office will be directed to the below-listed address until otherwise properly notified.

Telephone inquires concerning this decision should be directed to the undersigned at 571-272-3206. All other inquires concerning either the examination or status of the application should be directed to the Technology Center.

Liana Walsh
Petitions Examiner
Office of Petitions

cc: KNOBBE MARTENS OLSON & BEAR LLP
2040 MAIN STREET
FOURTEENTH FLOOR
IRVINE CA 92614

UNITED STATES PATENT AND TRADEMARK OFFICE

Commissioner for Patents
United States Patent and Trademark Office
P.O. Box 1450
Alexandria, VA 22313-1450
www.uspto.gov

MCHALE & SLAVIN, P.A.
2855 PGA BLVD
PALM BEACH GARDENS FL 33410

MAILED
JUN 29 2011
OFFICE OF PETITIONS

In re Application of
Edwin J. Sarver et al.
Application No. 12/469,501
Filed: May 20, 2009
Attorney Docket No. 2255.018

DECISION ON PETITION

This is a decision on the petitions under 37 CFR 1.48(a) to correct the inventorship and 37 CFR 1.183 for suspension of the rules.

The petitions are **DISMISSED as being moot**.

The petitions were filed to correct inventorship by removal of Robert Breece as a co-inventor. Breece was named as a co-inventor in the originally filed but unsigned declaration filed May 20, 2009.

MPEP 201.03(I) states in part:

> The Office will issue a filing receipt listing the inventors identified at the time of filing of the application even if the application was filed under 37 CFR 1.53(f) without an executed oath or declaration. Where the first-filed executed oath or declaration was filed on or after December 1, 1997 and sets forth an inventive entity which is different from the inventive entity initially set forth at the time of filing of the application, the actual inventorship of the application will be taken from the executed oath or declaration. See 37 CFR 1.41(a)(1). A request under 37 CFR 1.48(a), (b), or (c) will not be necessary. See 37 CFR 1.48(f).

Therefore, no petition under 37 CFR 1.48(a) is needed to set forth the correct inventorship as the executed declaration submitted with the petition sets forth the correct inventorship. Since no petition under 37 CFR 1.48(a) is needed, no petition under 37 CFR 1.183 is required.

The $400 petition fee for the petition filed under 37 CFR 1.183 is being refunded.

Further correspondence with respect to this matter should be addressed as follows:

By Mail: Mail Stop PETITION
Commissioner for Patents
Post Office Box 1450

Alexandria, VA 22313-1450

By Hand: U. S. Patent and Trademark Office
Customer Window, Mail Stop PETITIONS
401 Dulany Street
Alexandria, VA 22314

The centralized facsimile number is **(571) 273-8300.**

Telephone inquiries should be directed to the undersigned at (571) 272-6842.

Carl Friedman
Petitions Examiner
Office of Petitions

UNITED STATES PATENT AND TRADEMARK OFFICE

Commissioner for Patents
United States Patent and Trademark Office
P.O. Box 1450
Alexandria, VA 22313-1450
www.uspto.gov

Decision Date : January 11, 2012

In re Application of :

Akihisa WANIBE

DECISION ON PETITION

UNDER CFR 1.313(c)(2)

Application No : 12469532

Filed : 20-May-2009

Attorney Docket No : P143096T

This is an electronic decision on the petition under 37 CFR 1.313(c)(2), filed January 11, 2012 , to withdraw the above-identified application from issue after payment of the issue fee.

The petition is **GRANTED.**

The above-identified application is withdrawn from issue for consideration of a submission under 37 CFR 1.114 (request for continued examination). See 37 CFR 1.313(c)(2).

Petitioner is advised that the issue fee paid in this application cannot be refunded. If, however, this application is again allowed, petitioner may request that it be applied towards the issue fee required by the new Notice of Allowance.

Telephone inquiries concerning this decision should be directed to the Patent Electronic Business Center (EBC) at 866-217-9197.

This application file is being referred to Technology Center AU 2861 for processing of the request for continuing examination under 37 CFR 1.114 .

Office of Petitions

Doc Code: PET.AUTO Document Description: Petition automatically granted by EFS-Web	PTO/SB/140 U.S. Patent and Trademark Office Department of Commerce

Electronic Petition Request	**PETITION TO WITHDRAW AN APPLICATION FROM ISSUE AFTER PAYMENT OF THE ISSUE FEE UNDER 37 CFR 1.313(c)**
Application Number	12469532
Filing Date	20-May-2009
First Named Inventor	Akihisa WANIBE
Art Unit	2861
Examiner Name	ERICA LIN
Attorney Docket Number	P143096T
Title	LIQUID CONTAINER

An application may be withdrawn from issue for further action upon petition by the applicant. To request that the Office withdraw an application from issue, applicant must file a petition under this section including the fee set forth in § 1.17(h) and a showing of good and sufficient reasons why withdrawal of the application from issue is necessary.

APPLICANT HEREBY PETITIONS TO WITHDRAW THIS APPLICATION FROM ISSUE UNDER 37 CFR 1.313(c).

A grantable petition requires the following items:
(1) Petition fee; and
(2) One of the following reasons:
(a) Unpatentability of one or more claims, which must be accompanied by an unequivocal statement that one or more claims are unpatentable, an amendment to such claim or claims, and an explanation as to how the amendment causes such claim or claims to be patentable;
(b) Consideration of a request for continued examination in compliance with § 1.114 (for a utility or plant application only); or
(c) Express abandonment of the application. Such express abandonment may be in favor of a continuing application, but not a CPA under 37 CFR 1.53(d).

Petition Fee

☐ Applicant claims SMALL ENTITY status. See 37 CFR 1.27.

☐ Applicant is no longer claiming SMALL ENTITY status. See 37 CFR 1.27(g)(2).

☐ Applicant(s) status remains as SMALL ENTITY.

☒ Applicant(s) status remains as other than SMALL ENTITY

Reason for withdrawal from issue

○ One or more claims are unpatentable

◉ Consideration of a request for continued examination (RCE) (List of Required Documents and Fees)

○ Applicant hereby expressly abandons the instant application (any attorney/agent signing for this reason must have power of attorney pursuant to 37 CFR 1.32(b)).

RCE request,submission, and fee.

☐ I certify, in accordance with 37 CFR 1.4(d)(4) that : The RCE request ,submission, and fee have already been filed in the above-identified application on

☒ Are attached.

THIS PORTION MUST BE COMPLETED BY THE SIGNATORY OR SIGNATORIES

I certify, in accordance with 37 CFR 1.4(d)(4) that I am:

◉ An attorney or agent registered to practice before the Patent and Trademark Office who has been given power of attorney in this application.

○ An attorney or agent registered to practice before the Patent and Trademark Office, acting in a representative capacity.

○ A sole inventor

○ A joint inventor; I certify that I am authorized to sign this submission on behalf of all of the inventors

○ A joint inventor; all of whom are signing this e-petition

○ The assignee of record of the entire interest that has properly made itself of record pursuant to 37 CFR 3.71

Signature	/Mark P. Watson/
Name	Mark P. Watson
Registration Number	31448

Doc Code: PET.GREEN
Document Description: Petition for Green Tech Pilot

PTO/SB/420 (05-10)
Approved for use through 01/31/2011. OMB 0651-0062
U.S. Patent and Trademark Office; U. S. DEPARTMENT OF COMMERCE
Under the Paperwork Reduction Act of 1995, no persons are required to respond to a collection of information unless it displays a valid OMB control number.

PETITION TO MAKE SPECIAL UNDER THE GREEN TECHNOLOGY PILOT PROGRAM

Attorney Docket Number: 34223 CIP	Application Number (if known): 12/469,541	Filing date: 5/20/2009

First Named Inventor: Kenneth W. Smith

Title: HYDRATE INHIBITED LATEX FLOW IMPROVER

APPLICANT HEREBY REQUESTS TO PARTICIPATE IN THE GREEN TECHNOLOGY PILOT PROGRAM FOR THE ABOVE-IDENTIFIED APPLICATION. See Instruction Sheet on page 2.

This petition must be timely filed electronically using the USPTO electronic filing system, EFS-Web.

1. By filing this petition:

   Applicant is requesting early publication: Applicant hereby requests early publication under 37 CFR 1.219 and the publication fee set forth in 37 CFR 1.18(d) accompanies this request.

2. By filing this petition: applicant is agreeing to make an election without traverse in a telephonic interview and elect an invention that meets the eligibility requirements set forth in the notice titled "Pilot Program for Green Technologies Including Greenhouse Gas Reduction," as modified by the notice titled "Elimination of Classification Requirement in the Green Technology Pilot Program," each of which was published in the Federal Register, if the Office determines that the claims are not obviously directed to a single invention.

3. This request is accompanied by statements of special status for the eligibility requirement.

4. The application contains no more than three (3) independent claims and twenty (20) total claims.

5. The application does not contain any multiple dependent claims.

6. Other attachments: _____

Signature /richardyuen/	Date November 12, 2010
Name (Print/Typed) Richard Yuen	Registration Number 65287

Note: *Signatures of all the inventors or assignees of record of the entire interest or their representative(s) are required in accordance with 37 CFR 1.33 and 11.18. Please see 37 CFR 1.4(d) for the form of the signature. If necessary, submit multiple forms for more than one signature, see below*.*

☑ *Total of 1 forms are submitted.

The information is required to obtain or retain a benefit by the public which is to file (and by the USPTO to process) an application. Confidentiality is governed by 35 U.S.C. 122 and 37 CFR 1.11 and 1.14. This collection is estimated to take 1 hour to complete, including gathering, preparing, and submitting the completed application form to the USPTO. Time will vary depending upon the individual case. Any comments on the amount of time you require to complete this form and/or suggestions for reducing this burden, should be sent to the Chief Information Officer, U.S. Patent and Trademark Office, U.S. Department of Commerce, P.O. Box 1450, Alexandria, VA 22313-1450. DO NOT SEND FEES OR COMPLETED FORMS TO THIS ADDRESS. **SEND TO: Commissioner for Patents, P.O. Box 1450, Alexandria, VA 22313-1450.**

If you need assistance in completing the form, call 1-800-PTO-9199 and select option 2.

Appl. No.: 12/469,541 Confirmation No.: 2103

Applicant: Kenneth W. Smith

Filed: 05/20/2009

TC/A.U.: 3753

Examiner: N/A

Docket No.: 34223 CIP

Customer No.: 28841

Title: Hydrate Inhibited Latex Flow Improver

Commissioner for Patents

P.O. Box 1450

Alexandria VA 22313-1450

STATEMENTS OF SPECIAL STATUS

Sir:

In furtherance to the accompanying Petition to Make Special under the Green Technology Pilot Program, Applicants submit the following in support thereof. The claimed invention in the above-identified application materially enhances the quality of the environment by providing a safe and effective way to improve the flow of fluid through a pipeline. In particular, the invention relates to an improved process of producing a flow improver which will allow for increased flow through a pipeline for liquids at low temperatures and high pressures thereby reducing the chances of a blowout similar to the one experienced by BP in the Gulf of Mexico.

Respectfully Submitted,

Date: November 12, 2010

By: /richardyuen/
Attorney
Registration No. 65287
Email: richard.y.yuen@conocophillips.com

CONOCOPHILLIPS COMPANY – I.P. LEGAL
ATTN: Docketing
600 N. Dairy Ashford, MA-1135
Houston, Texas 77079
(281) 293-4126
(281) 293-2127 (Fax)

UNITED STATES PATENT AND TRADEMARK OFFICE

UNITED STATES DEPARTMENT OF COMMERCE
United States Patent and Trademark Office
Address: COMMISSIONER FOR PATENTS
P.O. Box 1450
Alexandria, Virginia 22313-1450
www.uspto.gov

APPLICATION NO.	FILING DATE	FIRST NAMED INVENTOR	ATTORNEY DOCKET NO.	CONFIRMATION NO.
12/469,541	05/20/2009	Kenneth W. Smith	34223 CIP	2103

28841 7590 11/22/2010
ConocoPhillips Company - IP Services Group
Attention: DOCKETING
600 N. Dairy Ashford
Bldg. MA-1135
Houston, TX 77079

EXAMINER

ART UNIT	PAPER NUMBER
3753	

NOTIFICATION DATE	DELIVERY MODE
11/22/2010	ELECTRONIC

Please find below and/or attached an Office communication concerning this application or proceeding.

The time period for reply, if any, is set in the attached communication.

Notice of the Office communication was sent electronically on above-indicated "Notification Date" to the following e-mail address(es):

Legal-IP@conocophillips.com

UNITED STATES PATENT AND TRADEMARK OFFICE

Commissioner for Patents
United States Patent and Trademark Office
P.O. Box 1450
Alexandria, VA 22313-1450
www.uspto.gov

ConocoPhillips Company - IP Services Group
Attention: DOCKETING
600 N. Dairy Ashford
Bldg. MA-1135
Houston TX 77079

In re Application of	:	
SMITH, KENNETH W. et al	:	DECISION ON PETITION
Application No. 12/469,541	:	TO MAKE SPECIAL UNDER
Filed: May 20, 2009	:	THE GREEN TECHNOLOGY
Attorney Docket No. 34223CIP	:	PILOT PROGRAM

This is a decision on the renewed petition under 37 CFR 1.102, filed Nov. 12, 2010, to make the above-identified application special under the pilot program for applications pertaining to Green Technologies as set forth in 74 Federal Register Notice 64666 (December 8, 2009) and amended by 75 Federal Register Notice 28554 (May 21, 2010) and 75 Federal Register Notice 69049 (November 10, 2010).

The petition is **GRANTED**.

A grantable petition to make an application special under 37 CFR 1.102 and the pilot program as set forth in 74 FR 64666 must be directed to a nonprovisional application filed under 35 USC 111(a) or be a national stage entry under 35 USC 371, exclusive of any reissue applications.

In order to qualify for special status, the following requirements must be met. 1) The application must have no more than 3 independent claims and no more than 20 total claims. 2) The application must not contain any multiple dependent claims. 3) The petition must state the basis for seeking special status, i.e., the claimed invention either: A) materially enhances the quality of the environment or B) materially contributes to: i) the discovery or development of renewable energy resources, ii) the more efficient utilization and conservation of energy resources, or iii) greenhouse gas emission reduction. 4) If the disclosure is not clear on its face that the claimed invention materially contributes under category (A) or (B), the petition must be accompanied by a statement by the applicant, assignee, or an attorney/agent registered to practice before the Office explaining how the materiality standard is met. 5) A statement that applicant will agree to make an election without traverse in a telephonic interview if a restriction requirement is made by the examiner. 6) The petition to make special must be filed electronically. 7) The petition

must be filed at least one day prior to the date that a first Office Action appears in the Patent Application Information Retrieval (PAIR) system. 8) The petition must be accompanied by a request for early publication in compliance with 37 CFR 1.219 and include the publication fee as set forth in 37 CFR 1.18(d).

The requirement for a fee for consideration of the petition to make special for applications pertaining to Green Technologies has been waived.

The instant petition complies with items 1 – 8 above. Accordingly, the above-identified application has been accorded "special" status.

Telephone inquires concerning this decision should be directed to Henry C. Yuen at 571-272-4856.

The application is being forwarded to the Technology Center Art Unit 3753 for action on the merits commensurate with this decision.

/Henry C. Yuen/

Henry C. Yuen
Quality Assurance Specialist
Technology Center TC 3700

UNITED STATES PATENT AND TRADEMARK OFFICE

Commissioner for Patents
United States Patent and Trademark Office
P.O. Box 1450
Alexandria, VA 22313-1450
www.uspto.gov

MAILED

AUG 05 2010

OFFICE OF PETITIONS

LAUSON & TARVER LLP
880 APOLLO STREET
SUITE 301
EL SEGUNDO, CA 90245

In re Application of	:	
E. Hampton Greene	:	
Application No. 12/469,570	:	ON PETITION
Filed: May 20, 2009	:	
Attorney Docket No. 09-18067	:	

This is a decision on the petition under the unintentional provisions of 37 CFR 1.137(b), filed, July 16, 2010, to revive the above-identified application.

The petition is **GRANTED**.

The application became abandoned for failure to file a reply in a timely manner to the Notice to File Corrected Application Papers (Notice), mailed June 10, 2009. The Notice set a period for reply of two (2) months from the mail date of the Notice. No extensions of time under the provisions of 37 CFR 1.136(a) were timely obtained. Accordingly, the application became abandoned on August 11, 2009. A Notice of Abandonment was mailed February 23, 2010.

The petition satisfies the requirements of 37 CFR 1.137(b) in that petitioner has supplied (1) the reply in the form of replacement drawings, (2) the petition fee of $810, and (3) a proper statement of unintentional delay.

This application file is being referred to the Office of Patent Application Processing (OPAP) for further pre-examination processing.

Telephone inquiries concerning this decision should be directed to the undersigned at (571) 272-6059. Telephone inquiries related to OPAP processing should be directed to their hotline at (271) 272-4000.

A. Kelley

Alicia Kelley
Petitions Examiner
Office of Petitions

UNITED STATES PATENT AND TRADEMARK OFFICE

UNITED STATES DEPARTMENT OF COMMERCE
United States Patent and Trademark Office
Address: COMMISSIONER FOR PATENTS
P.O. Box 1450
Alexandria, Virginia 22313-1450
www.uspto.gov

APPLICATION NO.	FILING DATE	FIRST NAMED INVENTOR	ATTORNEY DOCKET NO.	CONFIRMATION NO.
12/469,609	05/20/2009	Marcus Dutra e Mello	T-7690	2263

7590 11/22/2010
CHEVRON CORPORATION
P.O. BOX 6006
SAN RAMON, CA 94583-0806

EXAMINER

ART UNIT	PAPER NUMBER
1797	

MAIL DATE	DELIVERY MODE
11/22/2010	PAPER

DECISION DISMISSING PETITION UNDER 37 CFR 1.138(c)

The declaration of express abandonment will not be recognized

This is in response to the petition under 37 CFR 1.138(c), for express abandonment to avoid publication of the above-identified application.

The petition is dismissed.

The express abandonment will **not** be recognized for the reason(s) indicated below:

1. ☑ The petition under 37 CFR 1.138(c) was not filed in sufficient time to permit the appropriate officials to recognize the abandonment and remove the application from the publication process.
2. ☐ The petition was not signed by a party authorized by 37 CFR 1.33(b)(1), (3) or (4).
3. ☐ The Application was published in compliance with 35 U.S.C. 122(b), and it is available on the USPTO web site at http://www.uspto.gov/patft/index.html.
4. ☐ Petition fee was not paid.

The application **has/will be published** as scheduled.

Telephone inquiries should be directed to the Office of Data Management at (571) 272-4200.

Nimi Farmer

Patent Publication Branch
Office of Data Management

FORM PET650D (Rev. 08/07)

UNITED STATES PATENT AND TRADEMARK OFFICE

UNITED STATES DEPARTMENT OF COMMERCE
United States Patent and Trademark Office
Address: COMMISSIONER FOR PATENTS
P.O. Box 1450
Alexandria, Virginia 22313-1450
www.uspto.gov

APPLICATION NO.	FILING DATE	FIRST NAMED INVENTOR	ATTORNEY DOCKET NO.	CONFIRMATION NO.
12/469,609	05/20/2009	Marcus Dutra e Mello	T-7690	2263

EXAMINER

ART UNIT	PAPER NUMBER
1797	

MAIL DATE	DELIVERY MODE
11/22/2010	PAPER

7590 11/22/2010
CHEVRON CORPORATION
P.O. BOX 6006
SAN RAMON, CA 94583-0806

DECISION GRANTING PETITION UNDER 37 CFR 1.138(d)

The declaration of express abandonment is recognized

This is in response to the petition under 37 CFR 1.138(d), requesting for a refund of any previously paid search fee and excess claims fee in the above-identified application.

The petition is granted.

The express abandonment is recognized. Any previously paid search fee and excess claims fee are hereby refunded.

Telephone inquiries should be directed to the Office of Data Management at (571) 272-4200.

Mimi Farmer

Patent Publication Branch
Office of Data Management

FORM PET651G (Rev. 08/07)

UNITED STATES PATENT AND TRADEMARK OFFICE

Commissioner for Patents
United States Patent and Trademark Office
P.O. Box 1450

Broncus Technologies, Inc. c/o
Levine Bagade Han LLP
2400 Geng Road
Suite 120
Palo Alto CA 94303

MAILED

OCT 19 2011

OFFICE OF PETITIONS

In re Application of :
Eric J. GWERDER et al. : ON PETITION
Application No. 12/469,614 :
Filed: May 20, 2009 :
Atty. Docket No.: BRONNE01900

This is a decision on the petition under 37 CFR 1.181, filed October 7, 2011, to revive the above-identified application.

The petition is **GRANTED.**

The application was held abandoned for failure to reply in a timely manner to the non-final Office action mailed March 9, 2011 (outstanding Office action), which set a shortened statutory period for reply of three (3) months. A three-month extension of time under the provisions of 37 CFR 1.136(a) was obtained. A Notice of Abandonment was mailed October 6, 2011.

Petitioner requests the Notice of Abandonment mailed October 6, 2011 for failure to respond to the non-final Office action mailed March 9, 2011 be withdrawn as petitioner timely filed a response. A review of the record indicates that the original copy of the response is now in the file and was timely filed on September 13, 2011 with a certificate of mailing dated of September 9, 2011.

Accordingly, the Notice of Abandonment mailed October 6, 2011 is withdrawn. The instant application is restored to pending status.

Telephone inquiries relating to this decision should be directed to Robert DeWitty, Petitions Attorney, Office of Petitions (571-272-8427).

The application will be referred to Technology Center Art Unit 3777 for consideration of the filed Response.

Ramesh Krishnamurthy

for Anthony Knight
Director
Office of Petitions

UNITED STATES PATENT AND TRADEMARK OFFICE

Commissioner for Patents
United States Patent and Trademark Office
P.O. Box 1450
Alexandria, VA 22313-1450
www.uspto.gov

MAILED
NOV 01 2011
PCT LEGAL ADMINISTRATION

Broncus Technologies, Inc. c/o
Levine Bagade Han LLP
2400 Geng Road
Suite 120
Palo Alto CA 94303

In re Application of: GWERDER, Eric, J., et al. :
U.S. Application No.: 12/469,614 :
Filing Date: May 20, 2009 :
Attorney's Docket No.: BRONNE01900 :
For: DEVICES FOR CREATING :
PASSAGES AND SENSING FOR :
BLOOD VESSELS :

DECISION ON PETITION UNDER
37 CFR 1.78(a)(3) AND(a)(6)

This decision is issued in response to the "Petition To Accept An Unintentionally Delayed Claim For Priority Under 35 U.S.C. § 120 And 37 C.F.R. 1.78(a)(2)" filed 13 September 2011, treated herein under 37 CFR 1.73(a)(3) and (a)(6). The petition seeks to add to the present application acceptable benefit claims to prior-filed U.S. non-provisional application number 11/335,263, international application PCT/US2004/023304, and U.S. provisional application 60/488,332.

The petition is DISMISSED without prejudice.

37 CFR 1.78(a)(3) applies where, as here, the applicant in an application filed on or after November 29, 2000 seeks to add, after the expiration of the period specified in 37 CFR 1.78(a)(2)(ii), a claim of benefit under 35 U.S.C. 120 and 365(c) to a prior-filed U.S. non-provisional application and/or an international application designating the United States. 37 CFR 1.78(a)(6) applies where, as here, the applicant in an application filed on or after November 29, 2000 seeks to add, after the expiration of the period specified in 37 CFR 1.78(a)(5)(ii), a claim of benefit under 35 U.S.C. 119(e) to a prior-filed U.S. provisional application. Accordingly, the present petition is properly considered under both 37 CFR 1.78(a)(3) and (a)(6).

The present petition cannot be granted because the petition seeks to add to the present application a benefit claim to an inappropriate application. Specifically, the claim of benefit directed to U.S. provisional application 60/488,332 is improper because such application does not have an inventor in common with the present application, as required for a proper benefit claim under 35 U.S.C. 119(e).

Any renewed petition under 37 CFR 1.78(a)(3) seeking to add to the present application benefit claims directed to U.S. application number 11/335,263 and/or international application PCT/US2004/023304 must be accompanied by the materials required for a grantable petition under 37 CFR 1.78(a)(3), including a substitute amendment or supplemental application data

sheet (ADS) that properly sets forth the relationship of the present application to the prior-filed applications and does not include a benefit claim directed to an inappropriate application.[1]

Any further correspondence with respect to this petition may be filed electronically via EFS-Web selecting the document description "Petition for review and processing by the PCT Legal Office" or by mail addressed to Mail Stop PCT, Commissioner for Patents, Office of PCT Legal Administration, P.O. Box 1450, Alexandria, Virginia 22313-1450, with the contents of the letter marked to the attention of the Office of PCT Legal Administration.

/RichardMRoss/

Richard M. Ross
Attorney Advisor
Office of PCT Legal Administration
Telephone: (571) 272-3296

[1] It is noted that the filing date for U.S. application number 11/335,263 was incorrectly listed in applicants' proposed amendment as January 17, 2006. USPTO records identify the filing date for such application as January 18, 2006.

UNITED STATES PATENT AND TRADEMARK OFFICE

Commissioner for Patents
United States Patent and Trademark Office
P.O. Box 1450
Alexandria, VA 22313-1450
www.uspto.gov

HKH Law, LLC
1660 LINCOLN STREET, SUITE 3000
DENVER CO 80264

MAILED

SEP 30 2011

OFFICE OF PETITIONS

In re Application of	:	
Aaron P. Sereboff et al.	:	
Application No. 12/469,639	:	DECISION ON PETITION
Filed: May 20, 2009	:	TO WITHDRAW
Attorney Docket No. 836-002-USP	:	FROM RECORD
	:	

This is a decision on the Request to Withdraw as attorney or agent of record under 37 C.F.R. § 1.36(b), filed September 20, 2011.

The request is **NOT APPROVED.**

The Office will no longer approve requests from practitioners to withdraw from applications where the requesting practitioner is acting, or has acted, in a representative capacity pursuant to 37 CFR 1.34. In these situations, the practitioner is responsible for the correspondence the practitioner files in the application while acting in a representative capacity. As such, there is no need for the practitioner to obtain the Office's permission to withdraw from representation. However, practitioners acting in a representative capacity, like practitioners who have a power of attorney in the application, remain responsible for noncompliance with 37 CFR 1.56, as well as 37 CFR 10.18, with respect to documents they file.

A review of the file record indicates that Taryn A. Elliott and all attorneys/agents associated with customer number 45346 do not have power of attorney, but has acted in a representative capacity in this patent application. See 37 C.F.R. § 10.40. Accordingly, the request to withdraw under 37 C.F.R. § 1.36(b) is not applicable.

The correspondence address has been changed and is copied below.

Telephone inquires concerning this decision should be directed to the undersigned at 571-272-4618

/Kimberly Inabinet/

Kimberly Inabinet
Petitions Examiner
Office of Petitions

cc: Aaron P. Sereboff
2215 Millridge Road
Owings Mills, MD 21117

Doc Code: PET.GREEN
Document Description: Petition for Green Tech Pilot

PTO/SB/420 (11-10)
Approved for use through 01/31/2011. OMB 0651-0062
U.S. Patent and Trademark Office; U. S. DEPARTMENT OF COMMERCE
Under the Paperwork Reduction Act of 1995, no persons are required to respond to a collection of information unless it displays a valid OMB control number.

PETITION TO MAKE SPECIAL UNDER THE GREEN TECHNOLOGY PILOT PROGRAM

Attorney Docket Number: 81194139	Application Number (if known): 12/469,708	Filing date: 05/21/2009
First Named Inventor: Lin		
Title: AIR FILTRATION APPARATUS		

APPLICANT HEREBY REQUESTS TO PARTICIPATE IN THE GREEN TECHNOLOGY PILOT PROGRAM FOR THE ABOVE-IDENTIFIED APPLICATION. See Instruction Sheet on page 2.

This petition must be timely filed electronically using the USPTO electronic filing system, EFS-Web.

1. By filing this petition:

   Applicant is requesting early publication: Applicant hereby requests early publication under 37 CFR 1.219 and the publication fee set forth in 37 CFR 1.18(d) accompanies this request.

2. By filing this petition: applicant is agreeing to make an election without traverse in a telephonic interview and elect an invention that meets the eligibility requirements for the Green Technology Pilot Program, if the Office determines that the claims are not obviously directed to a single invention. See Instruction Sheet.

3. This request is accompanied by statements of special status for the eligibility requirement.

4. The application contains no more than three (3) independent claims and twenty (20) total claims.

5. The application does not contain any multiple dependent claims.

6. Other attachments: _____

Signature	Date 2/25/2011
Name (Print/Typed) Richard M. Sharkansky	Registration Number 25800

Note: *Signatures of all the inventors or assignees of record of the entire interest or their representative(s) are required in accordance with 37 CFR 1.33 and 11.18. Please see 37 CFR 1.4(d) for the form of the signature. If necessary, submit multiple forms for more than one signature see below*.*

*Total of forms are submitted.

The information is required to obtain or retain a benefit by the public which is to file (and by the USPTO to process) an application. Confidentiality is governed by 35 U.S.C. 122 and 37 CFR 1.11 and 1.14. This collection is estimated to take 12 hours to complete, including gathering, preparing, and submitting the completed application form to the USPTO. Time will vary depending upon the individual case. Any comments on the amount of time you require to complete this form and/or suggestions for reducing this burden, should be sent to the Chief Information Officer, U.S. Patent and Trademark Office, U.S. Department of Commerce, P.O. Box 1450, Alexandria, VA 22313-1450. DO NOT SEND FEES OR COMPLETED FORMS TO THIS ADDRESS. **SEND TO: Commissioner for Patents, P.O. Box 1450, Alexandria, VA 22313-1450.**

If you need assistance in completing the form, call 1-800-PTO-9199 and select option 2.

PATENT

IN THE UNITED STATES PATENT AND TRADEMARK OFFICE

Appl. No.	:	12/469,708	Confirmation No.: 2440
Applicant	:	Lin et al.	
Filed	:	May 5, 2009	
T.C./A.U.	:		
Examiner	:		
Docket No.	:	81194139 (FGTI-153PUS)	
Customer No.	:	33036	

Commissioner for Patents
P.O. Box 1450
Alexandria, VA 22313-1450

STATEMENTS OF SPECIAL STATUS

Applicants respectfully request consideration of the following statement concerning the basis for the special status as well as the following statement pertaining to the materiality standard.

I. Statement concerning the basis for special status.

Applicants submit that special status is sought on the following bases: the claimed invention materially contributes to greenhouse gas emission reduction; and/or (3) the claimed invention materially enhances the quality of the environment.

II. Statement pertaining to the materiality standard.

> This disclosure relates generally to air filtration apparatus and more particularly to air filtration apparatus for use with fuel vapor recovery system. Still more particularly, the disclosure relates to an air filter for an automotive vehicle fuel vapor recovery system, which includes structures for gradually separating unwanted particles of dust, moisture, soot, and the like from the vapor recovery system purge air stream.

As is known in the art, conventional fuel vapor recovery systems used in automotive vehicles typically include a carbon canister used to recover excess fuel vapor generated in the

fuel tank. Activated carbon in the carbon canister adsorbs the fuel vapor and temporarily retains the vapor until the canister is purged. During vehicle operation, at times determined by programmed vehicle calibration, the fuel vapor adsorbed by the activated carbon is desorbed by introducing outside air, or purge air, to the canister. The fuel vapor thus desorbed is fed to the engine for utilization in combustion.

More particularly, automotive internal combustion engines utilize a carbon canister connected to the fuel tank to collect fuel vapors from the fuel tank as the tank is being refilled, or when the vehicle is parked. The canister connected to the engine also allows the vapor stored within the canister to be pulled to the engine for burning during the "purge" cleansing process. Filtered fresh air is necessary for the purging process so that environmental contaminates do not eventually plug the carbon bed or damage some valves which may lead to the generation of On Board Diagnostic (OBD-II) detection faults. An air filtering apparatus with a built-in Canister Vent Valve (CVV) can become an important design element assuring the supply of this clean air.

Filtering of-purge air introduced to a vapor recovery system to purge the carbon canister is not new. For the mentioned purpose, prior art examples teach the use of one or more assemblies comprising either a filter medium, baffle means, or both. The present disclosure discloses a plurality of mating and nonmating planar baffles, the increased complexity of which is matched by increased functional efficiency.

In accordance with the present disclosure, an air filter assembly is provided for an evaporative emissions control canister used with an internal combustion engine fuel system. The air filter assembly includes: a housing having an air inlet formed in an upper portion of the housing and an air outlet; and a plurality of vertically extending baffles disposed within the housing between the upper portion of the housing and a bottom portion of the housing. The baffles form a plurality of vertically extending channels interconnected horizontally through horizontally interconnecting channels disposed adjacent the upper portion of the housing and an opposing bottom portion of the housing. A first one of the vertically extending channels receives air entering the housing from the air inlet. The air then passes laterally outwards in the housing from the first one of the vertically extending channels

successively to other ones of the vertically extending channels in a serpentine flow successively upwards and downwardly and through the horizontally interconnecting channels and then finally exiting the housing through the air outlet. A filter is disposed in one of the plurality of vertically extending channels in a path of the serpentine flow of the air passing through such one of the vertically extending channels.

In one embodiment, the housing has an outer side peripheral portion and the air outlet is disposed in a portion of the bottom portion of the housing adjacent the outer side peripheral portion of the housing.

In one embodiment, the housing has an outer side peripheral portion and the air outlet is disposed adjacent the outer side peripheral portion of the housing.

As pointed out in claim 1, an air filter assembly for an evaporative emissions control canister used with an internal combustion engine fuel system, comprises:

a housing having: an air inlet formed in an upper portion of the housing; and an air outlet;

a plurality of vertically extending baffles disposed within the housing between the upper portion of the housing and a bottom portion of the housing, such baffles forming a plurality of vertically extending channels interconnected horizontally through horizontally interconnecting channels disposed adjacent the upper portion of the housing and an opposing bottom portion of the housing, a first one of the vertically extending channels receiving air entering the housing from the air inlet, such air then passing laterally outwards in the housing from the first one of the vertically extending channels successively to other ones of the vertically extending channels in a serpentine flow successively upwards and downwardly and through the horizontally interconnecting channels and then finally exiting the housing through the air outlet; and

a filter disposed in one of the plurality of vertically extending channels in a path of the serpentine flow of the air passing through such one of the vertically extending channels.

As pointed out in claim 7, an air filter assembly, comprises:

a housing;

a plurality of vertically extending baffles disposed within the housing between an upper portion of the housing and a bottom portion of the housing, such baffles forming a plurality of vertically extending channels interconnected horizontally through horizontally interconnecting channels, a first one of the vertically extending channels receiving air entering the housing from an air inlet, such air then passing laterally outwards in the housing from the first one of the vertically extending channels successively to other ones of the vertically extending channels in a serpentine flow successively upwards and downwardly and through the horizontally interconnecting channels and then finally exiting the housing through the air outlet; and

a filter disposed in one of the plurality of vertically extending channels in a path of the serpentine flow of the air passing through such one of the vertically extending channels.

Please charge any cost incurred in this filing, along with any other costs, to Deposit Account No. 06-1510. In the event any additional fee is required, please charge such amount to Patent and Trademark Office Deposit Account No. 06-1510.

Respectfully submitted,

February 25, 2011

/richard sharkansky/

Date

Richard M. Sharkansky
Attorney for Applicant(s)
Reg. No.: 25,800
114 Tide Run
Mashpee, MA 02649
Telephone: (508) 477-4311
Facsimile: (508) 477-7234

UNITED STATES PATENT AND TRADEMARK OFFICE

UNITED STATES DEPARTMENT OF COMMERCE
United States Patent and Trademark Office
Address: COMMISSIONER FOR PATENTS
P.O. Box 1450
Alexandria, Virginia 22313-1450
www.uspto.gov

APPLICATION NO.	FILING DATE	FIRST NAMED INVENTOR	ATTORNEY DOCKET NO.	CONFIRMATION NO.
12/469,708	05/21/2009	Jhun Lin	81194139 (FGTI-153PUS)	2440

33066 7590 03/16/2011
RICHARD M. SHARKANSKY
114 TIDE RUN
MASHPEE, MA 02649

EXAMINER
HOPKINS, ROBERT A

ART UNIT	PAPER NUMBER
1776	

MAIL DATE	DELIVERY MODE
03/16/2011	PAPER

Please find below and/or attached an Office communication concerning this application or proceeding.

The time period for reply, if any, is set in the attached communication.

UNITED STATES PATENT AND TRADEMARK OFFICE

Commissioner for Patents
United States Patent and Trademark Office
P.O. Box 1450
Alexandria, VA 22313-1450
www.uspto.gov

3/16/2011

RICHARD M. SHARKANSKY
114 TIDE RUN
MASHPEE MA 02649

In re Application of	:	
Lin et al.	:	DECISION ON PETITION
Application No. 12/469,708	:	TO MAKE SPECIAL UNDER
Filed: 5/21/2009	:	THE GREEN TECHNOLOGY
Attorney Docket No. **81194139 (FGTI-153PUS)**	:	PILOT PROGRAM

This is a decision on the petition under 37 CFR 1.102, filed 2/25/2011, to make the above-identified application special under the pilot program for applications pertaining to Green Technologies as set forth in 74 Federal Register Notice 64666 (December 8, 2009) and amended by 75 Federal Register Notice 28554 (May 21, 2010) and 75 Federal Register Notice 69049 (November 10, 2010).

The petition is **GRANTED**.

A grantable petition to make an application special under 37 CFR 1.102 and the pilot program as set forth in 74 FR 64666 must be directed to a nonprovisional application filed under 35 USC 111(a) or be a national stage entry under 35 USC 371, exclusive of any reissue applications.

In order to qualify for special status, the following requirements must be met. 1) The application must have no more than 3 independent claims and no more than 20 total claims. 2) The application must not contain any multiple dependent claims. 3) The petition must state the basis for seeking special status, i.e., the claimed invention either: A) materially enhances the quality of the environment or B) materially contributes to: i) the discovery or development of renewable energy resources, ii) the more efficient utilization and conservation of energy resources, or iii) greenhouse gas emission reduction. 4) If the disclosure is not clear on its face that the claimed invention materially contributes under category (A) or (B), the petition must be accompanied by a statement by the applicant, assignee, or an attorney/agent registered to practice before the Office explaining how the materiality standard is met. 5) A statement that applicant will agree to make an election without traverse in a telephonic interview if a restriction requirement is made by the examiner. 6) The petition to make special must be filed electronically. 7) The petition must be filed at least one day prior to the date that a first Office Action appears in the Patent Application Information Retrieval (PAIR) system. 8) The petition must be accompanied by a request for early publication in compliance with 37 CFR 1.219 and include the publication fee as set forth in 37 CFR 1.18(d).

The requirement for a fee for consideration of the petition to make special for applications pertaining to Green Technologies has been waived.

The instant petition complies with items 1 – 8 above. Accordingly, the above-identified application has been accorded "special" status.

Telephone inquires concerning this decision should be directed to Tom Dunn at 571-272-1171.

The application is being forwarded to the Technology Center Art Unit 1776 for action on the merits commensurate with this decision.

/Tom Dunn/

Tom Dunn
Quality Assurance Specialist
Technology Center 1700

Doc Code: PET.GREEN
Document Description: Petition for Green Tech Pilot

PTO/SB/420 (11-10)
Approved for use through 01/31/2011. OMB 0651-0062
U.S. Patent and Trademark Office; U. S. DEPARTMENT OF COMMERCE
Under the Paperwork Reduction Act of 1995, no persons are required to respond to a collection of information unless it displays a valid OMB control number.

PETITION TO MAKE SPECIAL UNDER THE GREEN TECHNOLOGY PILOT PROGRAM

Attorney Docket Number: 81194138 (FGTI-154PUS)	Application Number (if known): 12/469,709	Filing date: 05/21/;2009
First Named Inventor: Lin		
Title: AIR FILTRATION APPARATUS		

APPLICANT HEREBY REQUESTS TO PARTICIPATE IN THE GREEN TECHNOLOGY PILOT PROGRAM FOR THE ABOVE-IDENTIFIED APPLICATION. See Instruction Sheet on page 2.

This petition must be timely filed electronically using the USPTO electronic filing system, EFS-Web.

1. By filing this petition:

   Applicant is requesting early publication: Applicant hereby requests early publication under 37 CFR 1.219 and the publication fee set forth in 37 CFR 1.18(d) accompanies this request.

2. By filing this petition: applicant is agreeing to make an election without traverse in a telephonic interview and elect an invention that meets the eligibility requirements for the Green Technology Pilot Program, if the Office determines that the claims are not obviously directed to a single invention. See Instruction Sheet.

3. This request is accompanied by statements of special status for the eligibility requirement.

4. The application contains no more than three (3) independent claims and twenty (20) total claims.

5. The application does not contain any multiple dependent claims.

6. Other attachments: _____

Signature [signature]	Date 2-28-2011
Name (Print/Typed) Richard M. Sharkansky	Registration Number 25800

Note: *Signatures of all the inventors or assignees of record of the entire interest or their representative(s) are required in accordance with 37 CFR 1.33 and 11.18. Please see 37 CFR 1.4(d) for the form of the signature. If necessary, submit multiple forms for more than one signature see below*.*

*Total of _____ forms are submitted.

The information is required to obtain or retain a benefit by the public which is to file (and by the USPTO to process) an application. Confidentiality is governed by 35 U.S.C. 122 and 37 CFR 1.11 and 1.14. This collection is estimated to take 12 hours to complete, including gathering, preparing, and submitting the completed application form to the USPTO. Time will vary depending upon the individual case. Any comments on the amount of time you require to complete this form and/or suggestions for reducing this burden, should be sent to the Chief Information Officer, U.S. Patent and Trademark Office, U.S. Department of Commerce, P.O. Box 1450, Alexandria, VA 22313-1450. DO NOT SEND FEES OR COMPLETED FORMS TO THIS ADDRESS. **SEND TO: Commissioner for Patents, P.O. Box 1450, Alexandria, VA 22313-1450.**

If you need assistance in completing the form, call 1-800-PTO-9199 and select option 2.

PATENT

IN THE UNITED STATES PATENT AND TRADEMARK OFFICE

Appl. No.	:	12/469,709	Confirmation No.: 2441
Applicant	:	Lin et al.	
Filed	:	May 5, 2009	
T.C./A.U.	:		
Examiner	:		
Docket No.	:	81194138 (FGTI-154PUS)	
Customer No.	:	33036	

Commissioner for Patents
P.O. Box 1450
Alexandria, VA 22313-1450

STATEMENTS OF SPECIAL STATUS

Applicants respectfully request consideration of the following statement concerning the basis for the special status as well as the following statement pertaining to the materiality standard.

I. Statement concerning the basis for special status.

Applicants submit that special status is sought on the following bases: the claimed invention materially contributes to greenhouse gas emission reduction; and/or (3) the claimed invention materially enhances the quality of the environment.

II. Statement pertaining to the materiality standard.

This disclosure relates generally to air filtration apparatus and more particularly to air filtration apparatus for use with fuel vapor recovery system. Still more particularly, the disclosure relates to an air filter for an automotive vehicle fuel vapor recovery system, which includes structures for gradually separating unwanted particles of dust, moisture, soot, and the like from the vapor recovery system purge air stream.

As is known in the art, Conventional fuel vapor recovery systems used in automotive vehicles typically include a carbon canister used to recover excess fuel vapor generated in the fuel tank. Activated carbon in the carbon canister adsorbs the fuel vapor and temporarily

retains the vapor until the canister is purged. During vehicle operation, at times determined by programmed vehicle calibration, the fuel vapor adsorbed by the activated carbon is desorbed by introducing outside air, or purge air, to the canister. The fuel vapor thus desorbed is fed to the engine for utilization in combustion.

More particularly, automotive internal combustion engines utilize a carbon canister connected to the fuel tank to collect fuel vapors from the fuel tank as the tank is being refilled, or when the vehicle is parked. The canister connected to the engine also allows the vapor stored within the canister to be pulled to the engine for burning during the "purge" cleansing process. Filtered fresh air is necessary for the purging process so that environmental contaminates do not eventually plug the carbon bed or damage some valves which may lead to the generation of On Board Diagnostic (OBD-II) detection faults. An air filtering apparatus with a built-in Canister Vent Valve (CVV) can become an important design element assuring the supply of this clean air.

There are two primary and novel factors contributing to the long-lasting functionality of our disclosure. The first is found in the design of the baffle section. The plurality of baffles are designed such that the particles, having wide size and inertial distributions, are dislodged from the air stream as it travels from inlet towards the filter section. This occurs due to decreased baffle spacing between baffles and the corresponding increase in mobility demand placed on the air flow. The second primary and novel quality of our disclosure is found in the implementation of a filter element so that the smallest particles (those that survive the baffle section) are generally lodged in the upper half of the filter element and eventually, due to gravity, vibration, etc., will migrate to the lower portions of the element. This occurrence will ensure the thorough cleaning of the air and the long-lasting function of the air filter assembly.

In accordance with the present disclosure, an air filter assembly is provided for an evaporative emissions control canister used with an internal combustion engine fuel system. The assembly includes: a housing having: an air inlet formed in an upper portion of the housing; and an air outlet; and; a baffle disposed within the housing. The baffle extends vertically downward from the air inlet in the upper portion of the housing towards a bottom portion of the housing. The baffles forming a plurality of vertically extending channels

interconnected through a horizontally interconnecting channel formed between a bottom edge of the baffle and the bottom portion of the housing. A first one of the vertically extending channel receives air entering the housing from the air inlet. The air passes downwardly in the first one of the channels, then passing laterally outwards through the horizontally interconnecting channel towards sidewalls of the housing, then passing upwardly through a second one of the vertically extending channels, and then finally exiting the housing through the air outlet. A filter structure is disposed in the second one of the vertically extending channels.

In one embodiment, the filter structure is disposed adjacent the upper portion of the housing.

In one embodiment, the air outlet is disposed between the upper portion of the housing and a first portion of a sidewall of the housing.

In one embodiment, the second one of the vertically extending channels has a first portion disposed between a first surface portion of the baffle and a first sidewall portion of the outlet. The first sidewall portion of the outlet is disposed within the housing. The second one of the vertically extending channels has a second portion disposed between a second surface portion of the baffle and a second sidewall portion of the housing.

In one embodiment, a first portion of the filter structure includes: a first filter member having: a first portion disposed between the first surface portion of the baffle and the first sidewall portion of the outlet; and a second portion disposed between the second portion of the baffle and a space between a lateral edge of the first filter element and the second sidewall portion of the housing.

In one embodiment, the filter structure includes a second filter member disposed above the first filter member. The second filter member has: a first portion disposed between the first surface portion of the baffle and a second surface portion of the outlet; and a second portion extending between the second surface portion of the baffle and the second sidewall portion of the housing and over the space between the lateral edge of the first filter element and the second sidewall portion of the housing.

As pointed out in claim 1, an air filter assembly for an evaporative emissions control

canister used with an internal combustion engine fuel system, comprises:

a housing having: an air inlet formed in an upper portion of the housing; and an air outlet;

a baffle disposed within the housing, such baffle extending vertically downward from the air inlet in the upper portion of the housing towards a bottom portion of the housing, such baffle forming a plurality of vertically extending channels interconnected through a horizontally interconnecting channel formed between a bottom edge of the baffle and the bottom portion of the housing, a first one of the vertically extending channel receiving air entering the housing from the air inlet, such air passing downwardly in the first one of the channels, then passing laterally outwards through the horizontally interconnecting channel towards a sidewalls of the housing, then passing upwardly through a second one of the vertically extending channels, and then finally exiting the housing through the air outlet; and

a filter structure disposed in the second one of the vertically extending channels.

Please charge any cost incurred in this filing, along with any other costs, to Deposit Account No. 06-1510. In the event any additional fee is required, please charge such amount to Patent and Trademark Office Deposit Account No. 06-1510.

Respectfully submitted,

February 28, 2011 /richard sharkansky/

Date

Richard M. Sharkansky
Attorney for Applicant(s)
Reg. No.: 25,800
114 Tide Run
Mashpee, MA 02649
Telephone: (508) 477-4311
Facsimile: (508) 477-7234

UNITED STATES PATENT AND TRADEMARK OFFICE

UNITED STATES DEPARTMENT OF COMMERCE
United States Patent and Trademark Office
Address: COMMISSIONER FOR PATENTS
P.O. Box 1450
Alexandria, Virginia 22313-1450
www.uspto.gov

APPLICATION NO.	FILING DATE	FIRST NAMED INVENTOR	ATTORNEY DOCKET NO.	CONFIRMATION NO.
12/469,709	05/21/2009	Jhun Lin	81194138 (FGTI-154PUS)	2441

33066 7590 03/16/2011
RICHARD M. SHARKANSKY
114 TIDE RUN
MASHPEE, MA 02649

EXAMINER
HOPKINS, ROBERT A

ART UNIT	PAPER NUMBER
1776	

MAIL DATE	DELIVERY MODE
03/16/2011	PAPER

Please find below and/or attached an Office communication concerning this application or proceeding.

The time period for reply, if any, is set in the attached communication.

UNITED STATES PATENT AND TRADEMARK OFFICE

Commissioner for Patents
United States Patent and Trademark Office
P.O. Box 1450
Alexandria, VA 22313-1450
www.uspto.gov

3/16/2011

RICHARD M. SHARKANSKY
114 TIDE RUN
MASHPEE MA 02649

In re Application of	:	
Lin et al.	:	DECISION ON PETITION
Application No. 12/469,709	:	TO MAKE SPECIAL UNDER
Filed: 5/21/2009	:	THE GREEN TECHNOLOGY
Attorney Docket No. **81194138 (FGTI-154PUS)**	:	PILOT PROGRAM

This is a decision on the petition under 37 CFR 1.102, filed 2/28/2011, to make the above-identified application special under the pilot program for applications pertaining to Green Technologies as set forth in 74 Federal Register Notice 64666 (December 8, 2009) and amended by 75 Federal Register Notice 28554 (May 21, 2010) and 75 Federal Register Notice 69049 (November 10, 2010).

The petition is **GRANTED**.

A grantable petition to make an application special under 37 CFR 1.102 and the pilot program as set forth in 74 FR 64666 must be directed to a nonprovisional application filed under 35 USC 111(a) or be a national stage entry under 35 USC 371, exclusive of any reissue applications.

In order to qualify for special status, the following requirements must be met. 1) The application must have no more than 3 independent claims and no more than 20 total claims. 2) The application must not contain any multiple dependent claims. 3) The petition must state the basis for seeking special status, i.e., the claimed invention either: A) materially enhances the quality of the environment or B) materially contributes to: i) the discovery or development of renewable energy resources, ii) the more efficient utilization and conservation of energy resources, or iii) greenhouse gas emission reduction. 4) If the disclosure is not clear on its face that the claimed invention materially contributes under category (A) or (B), the petition must be accompanied by a statement by the applicant, assignee, or an attorney/agent registered to practice before the Office explaining how the materiality standard is met. 5) A statement that applicant will agree to make an election without traverse in a telephonic interview if a restriction requirement is made by the examiner. 6) The petition to make special must be filed electronically. 7) The petition must be filed at least one day prior to the date that a first Office Action appears in the Patent Application Information Retrieval (PAIR) system. 8) The petition must be accompanied by a request for early publication in compliance with 37 CFR 1.219 and include the publication fee as set forth in 37 CFR 1.18(d).

The requirement for a fee for consideration of the petition to make special for applications pertaining to Green Technologies has been waived.

The instant petition complies with items 1 – 8 above. Accordingly, the above-identified application has been accorded "special" status.

Telephone inquires concerning this decision should be directed to Tom Dunn at 571-272-1171.

The application is being forwarded to the Technology Center Art Unit 1776 for action on the merits commensurate with this decision.

/Tom Dunn/

Tom Dunn
Quality Assurance Specialist
Technology Center 1700

UNITED STATES PATENT AND TRADEMARK OFFICE

Commissioner for Patents
United States Patent and Trademark Office
P.O. Box 1450
Alexandria, VA 22313-1450
www.uspto.gov

MAILED

SEP 02 2010

OFFICE OF PETITIONS

GE HEALTHCARE BIO-SCIENCES CORP.
PATENT DEPARTMENT
101 CARNEGIE CENTER
PRINCETON NJ 08540

In re Application of	:	
Anderson, et al.	:	
Application No. 12/469,714	:	ON PETITION
Filed: June 8, 2009	:	
Attorney Docket No.: PU01114-CON	:	

This is a decision on the petition under 37 CFR 1.57 filed November 24, 2009, requesting that the above-identified application be accorded a filing date of May 21, 2009.

The petition is **dismissed**.

The application was filed on May 21, 2009. On June 4, 2009, the Office of Patent Application Processing mailed a Notice of Incomplete Non-Provisional Application stating that the application had not been accorded a filing date because a specification was missing. The notice allowed a non-extendable period for reply of two-months from its mailing date.

The present petition was filed on November 24, 2009. A copy of the specification of prior-filed international application PCT/US2002/026078 was filed on June 8, 2009.

37 CFR 1.57 states, in pertinent part, that:

> (a) Subject to the conditions and requirements of this paragraph, if all or a portion of the specification or drawing(s) is inadvertently omitted from an application, but the application contains a claim under § 1.55 for priority of a prior-filed foreign application, or a claim under § 1.78 for the benefit of a prior-filed provisional, nonprovisional, or international application, that was present on the filing date of the application, and the inadvertently omitted portion of the specification or drawing(s) is completely contained in the prior-filed application, the claim under § 1.55 or § 1.78 shall also be considered an incorporation by reference of the prior- filed application as to the inadvertently omitted portion of the specification or drawing(s).
>
> (1) The application must be amended to include the inadvertently omitted portion of the specification or drawing(s) within any time period set by the Office, but in no case later than the close of prosecution as defined by § 1.114(b), or abandonment of the application, whichever occurs earlier. The applicant is also required to:
>
> (i) Supply a copy of the prior-filed application, except where the prior- filed application is an application filed under 35 U.S.C. 111;

(ii) Supply an English language translation of any prior-filed application that is in a language other than English; and

(iii) Identify where the inadvertently omitted portion of the specification or drawings can be found in the prior-filed application.

...

(3) If an application is not otherwise entitled to a filing date under § 1.53(b), the amendment must be by way of a petition pursuant to this paragraph, accompanied by the fee set forth in § 1.17(f).

The petition fails to comply with 37 CFR 1.57(a).

Petitioner has not provided an amendment to include the omitted specification as required 37 CFR 1.57(a). Any renewed petition filed must be accompanied by an amendment requesting entry of the inadvertently omitted specification.

Any request for reconsideration must be filed within TWO MONTHS of the date of this decision in order to be considered timely. This period may not be extended pursuant to 37 CFR 1.136.

Further correspondence with respect to this matter should be addressed as follows:

By mail: Mail Stop Petition
Commissioner for Patents
PO Box 1450
Alexandria, VA 22313-1450

By FAX: (571) 273-8300
Attn: Office of Petitions

By hand: Customer Service Window
Mail Stop Petitions
Randolph Building
401 Dulany Street
Alexandria, VA 22314

Telephone inquiries concerning this matter may be directed to Kenya A. McLaughlin, Petitions Attorney, at (571) 272-3222.

Chris Bottorff
Supervisor
Office of Petitions

UNITED STATES PATENT AND TRADEMARK OFFICE

Commissioner for Patents
United States Patent and Trademark Office
P.O. Box 1450
Alexandria, VA 22313-1450
www.uspto.gov

GE HEALTHCARE BIO-SCIENCES CORP.
PATENT DEPARTMENT
101 CARNEGIE CENTER
PRINCETON NJ 08540

MAILED
DEC 06 2010
OFFICE OF PETITIONS

In re Application of :
Anderson, et al. :
Application No. 12/469,714 : ON PETITION
Filed: May 21, 2009 :
Attorney Docket No.: PU01114-CON :

This is a decision on the renewed petition under 37 CFR 1.57 filed October 25, 2010.

The petition is **granted.**

The application was filed on May 21, 2009. On June 4, 2009, the Office of Patent Application Processing mailed a Notice of Incomplete Non-Provisional Application stating that the application had not been accorded a filing date because a specification was missing. The notice allowed a non-extendable period for reply of two-months from its mailing date.

The instant renewed petition was filed on October 25, 2010, and is accompanied by an amendment requesting entry of the omitted specification found in prior-filed international application PCT/US2002/026078. A review of the application file reveals that the subject application, on filing, claimed priority under 37 CFR 1.78 to the PCT application.

Effective September 21, 2004, 37 CFR 1.57 allows a priority claim to a prior-filed application to be considered an incorporation by reference statement allowing for the incorporation of the prior filed application as to inadvertently omitted portion of the specification or drawings. When using 37 CFR 1.57, applicant's are required to amend the application to include the inadvertently omitted material, and identify where the inadvertently omitted portion of the drawings can be found in the prior-filed application.

It is noted that 37 CFR 1.57(a)(3) indicates that if the application is not otherwise entitled to a filing date under 37 CFR 1.53(b), the amendment must be by way of the petition. This application was determined not to be entitled to a filing date. Accordingly, a petition is required to amend the application pursuant to 37 CFR 1.57. The petition is granted, accordingly.

The application will be accorded a filing date of May 21, 2009.

The application is being returned to the Office of Patent Application Processing for further processing with a filing date of May 21, 2009. The Office of Patent Application Processing will issue a corrected filing receipt.

Telephone inquiries concerning this matter may be directed to Kenya A. McLaughlin, Petitions Attorney, at (571) 272-3222.

Chris Bottorff
Supervisor
Office of Petitions

UNITED STATES PATENT AND TRADEMARK OFFICE

Commissioner for Patents
United States Patent and Trademark Office
P.O. Box 1450
Alexandria, VA 22313-1450
www.uspto.gov

CANTOR COLBURN LLP
20 Church Street
22nd Floor
Hartford CT 06103

MAILED
SEP 30 2011
OFFICE OF PETITIONS

In re Application of
Kim et al.
Application No 12/469,825
Filed: May 21, 2009
Attorney Docket No. PNK0805USC

ON PETITION

This is a decision on the petition under the unintentional provisions of 37 CFR 1.137(b), filed September 26, 2011, to revive the above-identified application.

The petition is **GRANTED**.

The application became abandoned for failure to timely file a reply within the meaning of 37 CFR 1.113 to the final Office action of February 16, 2011. The proposed reply required for consideration of a petition to revive must be a Notice of Appeal (and appeal fee required by 37 CFR 41.20(b)(2), an amendment that *prima facie* places the application in condition for allowance, a Request for Continued Examination and submission (37 CFR 1.114), or the filing of a continuing application under 37 CFR 1.53(b). See MPEP 711.03(c)(III)(A)(2). No extension of time pursuant to the provisions of 37 CFR 1.136(a) was obtained. Accordingly, the date of abandonment of this application is May 17, 2011. A Notice of Abandonment was mailed on September 6, 2011.

The petition satisfies the requirements of 37 CFR 1.137(b) in that petitioner has supplied (1) the reply in the form of a Request for Continued Examination (RCE) and fee of $930.00, and the submission required by 37 CFR 1.114; (2) the petition fee of $1860.00; and (3) a proper statement of unintentional delay.

It is not apparent whether the person signing the statement of unintentional delay was in a position to have firsthand or direct knowledge of the facts and circumstances of the delay at issue. Nevertheless, such statement is being treated as having been made as the result of a reasonable inquiry into the facts and circumstances of such delay. See 37 CFR §10.18(b). In the event that such an inquiry has not been made, Petitioner must make such an inquiry. If such inquiry results in the discovery that it is not correct that the entire delay in filing the required reply from the due date for the reply until the filing of a grantable petition pursuant to 37 CFR §1.137(b) was unintentional, petitioner must notify the Office.

Telephone inquiries concerning this decision should be directed to the undersigned at (571) 272-3215.

This application is being referred to Technology Center AU 1723 for processing of the RCE and for appropriate action by the Examiner in the normal course of business on the amendment submitted in accordance with 37 CFR 1.114.

Charlema Grant
Petitions Attorney
Office of Petitions

UNITED STATES PATENT AND TRADEMARK OFFICE

UNITED STATES DEPARTMENT OF COMMERCE
United States Patent and Trademark Office
Address: COMMISSIONER FOR PATENTS
P.O. Box 1450
Alexandria, Virginia 22313-1450
www.uspto.gov

APPLICATION NO.	FILING DATE	FIRST NAMED INVENTOR	ATTORNEY DOCKET NO.	CONFIRMATION NO.
12/469,838	05/21/2009	Seiichiro KANNO	POL-7112	2655

7590 03/17/2011
MATTINGLY & MALUR, P.C.
1800 DIAGONAL ROAD
SUITE 370
ALEXANDRIA, VA 22314

EXAMINER
GLICK, EDWARD J

ART UNIT	PAPER NUMBER
2882	

MAIL DATE	DELIVERY MODE
03/17/2011	PAPER

DECISION GRANTING PETITION UNDER 37 CFR 1.138(d)

The declaration of express abandonment is recognized

This is in response to the petition under 37 CFR 1.138(d), requesting for a refund of any previously paid search fee and excess claims fee in the above-identified application.

The petition is granted.

The express abandonment is recognized. Any previously paid search fee and excess claims fee are hereby refunded.

Telephone inquiries should be directed to the Office of Data Management at (571) 272-4200.

Nioni Farmer

Patent Publication Branch
Office of Data Management

FORM PET651G (Rev. 08/07)

SPE RESPONSE FOR CERTIFICATE OF CORRECTION

DATE : 01-10-12

TO SPE OF : ART UNIT 2877

SUBJECT : Request for Certificate of Correction for Appl. No.: 12/469893 Patent No.: 8045181

CofC mailroom date: 12-27-11

Please respond to this request for a certificate of correction within 7 days.

FOR IFW FILES:

Please review the requested changes/corrections as shown in the **COCIN** document(s) in the IFW application image. No new matter should be introduced, nor should the scope or meaning of the claims be changed.

Please complete the response (see below) and forward the completed response to scanning using document code **COCX**.

FOR PAPER FILES:

Please review the requested changes/corrections as shown in the attached certificate of correction. Please complete this form (see below) and forward it with the file to:

Certificates of Correction Branch (CofC)
Randolph Square – 9D10-A
Palm Location 7580

Note:

Angela Green 571.272.9005
CofC Branch 703-756-1814

Thank You For Your Assistance

The request for issuing the above-identified correction(s) is hereby:
Note your decision on the appropriate box.

- ☒ **Approved** — **All** changes apply.
- ☐ **Approved in Part** — Specify below which changes **do not** apply.
- ☐ **Denied** — State the reasons for denial below.

Comments: All changes approved.

SPE /Gregory J. Toatley, Jr./ **Art Unit** 2877

Refine Search

Search Results

Terms	Documents
(parent bit and child bit and color channel and weight).clm.	1

Database:
US Pre-Grant Publication Full-Text Database
US Patents Full-Text Database
US Patents OCR Backfile
EPO Abstracts Database
JPO Abstracts Database
Derwent World Patents Index
IBM Technical Disclosure Bulletin Database

Search Type: Prior Art Interference

Search: L19

Refine Search

Recall Text Clear Interrupt

Search History

DATE: Tuesday, February 21, 2012 Purge Queries Printable Copy Create Case

Set Name Side by Side	Query	Hit Count	Set Name Result Set	Set Name Grid
Prior Art Searches				
DB=PGPB; PLUR=YES; OP=ADJ				
L19	(parent bit and child bit and color channel and weight).clm.	1	L19	L19
L18	(pixel data and color channel and (bit adj4 weight) and sub$group).clm.	1	L18	L18
L17	(frame data and digital image and dither pattern and sub$frame and sequence).clm.	1	L17	L17
DB=PGPB,USPT,USOC,EPAB,JPAB,DWPI,TDBD; PLUR=YES; OP=ADJ				
L16	L1 and (dither pattern near5 (frame or video)) and ((sequen$4 or continuous$3) near5 dither$3)	22	L16	L16
L15	((adaptive adj4 dither$3) same (pattern near5 (frame or	1	L15	L15

	video or picture)))			
L14	L1 and ((adaptive adj4 dither$3) same (pattern near5 (frame or video or picture)))	0	L14	L14
L13	L4 and ((adaptive adj4 dither$3) same (pattern near5 (frame or video or picture)))	0	L13	L13
L12	(L6 or L11)	26	L12	L12
L11	(takatoshi).in. and (dither$3 adj3 pattern)	9	L11	L11
L10	L8 and (dither$3 adj3 pattern)	1	L10	L10
L9	L8 and (dither$3 adj3 pattern)	1	L9	L9
L8	(takatoshi).in. and (display$3 near5 (sub$frame or sub$field))	21	L8	L8
L7	L6 and ((pit or color or value) adj4 pixel)	18	L7	L7
L6	(L4 or L3) and (((display$3 or render$3 or output$4) near5 (sub$frame or sub$field)) same dither$3)	18	L6	L6
L5	(L4 or L3) and ((sub$frame adj5 dither$3) same (sequen$3 or continous$2 or series))	2	L5	L5
L4	L1 and (pattern adj4 dither$3)	105	L4	L4
L3	L1 and (((two or more or plural$3 or multi$3 or different or distinct) near5 pattern) same dither$3)	64	L3	L3
L2	L1 and (((two or more or plural$3 or multi$3 or different or distinct) near5 patern) same dither$3)	0	L2	L2
L1	(((continous$2 or sequen$4 or series) near7 frame) same (frame near5 (image or picture or object or graphic or video)))	42693	L1	L1

END OF SEARCH HISTORY

Refine Search

Search Results

Terms	Documents
L1 and (dither pattern near5 (frame or video)) and ((sequen$4 or continuous$3) near5 dither$3)	22

Database:

US Pre-Grant Publication Full-Text Database
US Patents Full-Text Database
US Patents OCR Backfile
EPO Abstracts Database
JPO Abstracts Database
Derwent World Patents Index
IBM Technical Disclosure Bulletin Database

Search Type: Prior Art Interference

Search: L16

Refine Search

Recall Text Clear Interrupt

Search History

DATE: Tuesday, February 21, 2012 Purge Queries Printable Copy Create Case

Set Name Side by Side	Query	Hit Count	Set Name Result Set	Set Name Grid
Prior Art Searches				
DB=PGPB,USPT,USOC,EPAB,JPAB,DWPI,TDBD; PLUR=YES; OP=ADJ				
L16	L1 and (dither pattern near5 (frame or video)) and ((sequen$4 or continuous$3) near5 dither$3)	22	L16	L16
L15	((adaptive adj4 dither$3) same (pattern near5 (frame or video or picture)))	1	L15	L15
L14	L1 and ((adaptive adj4 dither$3) same (pattern near5 (frame or video or picture)))	0	L14	L14
L13	L4 and ((adaptive adj4 dither$3) same (pattern near5 (frame or video or picture)))	0	L13	L13
L12	(L6 or L11)	26	L12	L12

L11	(takatoshi).in. and (dither$3 adj3 pattern)	9	L11	L11
L10	L8 and (dither$3 adj3 pattern)	1	L10	L10
L9	L8 and (dither$3 adj3 pattern)	1	L9	L9
L8	(takatoshi).in. and (display$3 near5 (sub$frame or sub$field))	21	L8	L8
L7	L6 and ((pit or color or value) adj4 pixel)	18	L7	L7
L6	(L4 or L3) and (((display$3 or render$3 or output$4) near5 (sub$frame or sub$field)) same dither$3)	18	L6	L6
L5	(L4 or L3) and ((sub$frame adj5 dither$3) same (sequen$3 or continous$2 or series))	2	L5	L5
L4	L1 and (pattern adj4 dither$3)	105	L4	L4
L3	L1 and (((two or more or plural$3 or multi$3 or different or distinct) near5 pattern) same dither$3)	64	L3	L3
L2	L1 and (((two or more or plural$3 or multi$3 or different or distinct) near5 patern) same dither$3)	0	L2	L2
L1	(((continous$2 or sequen$4 or series) near7 frame) same (frame near5 (image or picture or object or graphic or video)))	42693	L1	L1

END OF SEARCH HISTORY

UNITED STATES PATENT AND TRADEMARK OFFICE

Commissioner for Patents
United States Patent and Trademark Office
P.O. Box 1450
Alexandria, VA 22313-1450
www.uspto.gov

RUBEN ALCOBA, ESQ.
3399 NW 72 Avenue
Suite 211
Miami, FL 33122

MAILED

OCT 05 2010

OFFICE OF PETITIONS

In re Application of	:	
Jonathan Paul Tanger	:	
Application No. 12/470,029	:	DECISION ON PETITION
Filed: May 21, 2009	:	TO WITHDRAW
Attorney Docket No. 10113	:	FROM RECORD
	:	

This is a decision on the Request to Withdraw as attorney or agent of record under 37 C.F.R. § 1.36(b), filed September 13, 2010.

The request is **APPROVED**.

A grantable request to withdraw as attorney/agent of record must be signed by every attorney/agent seeking to withdraw or contain a clear indication that one attorney is signing on behalf of another/others. A request to withdraw will not be approved unless at least 30 (thirty) days would remain between the date of approval and the later of the expiration date of a time to file a response or the expiration date of the maximum time period which can be extended under 37 C.F.R. § 1.136(a).

The request was signed by Ruben Alcoba on behalf of all attorneys of record. All attorneys/agents have been withdrawn. Applicant is reminded that there is no attorney of record at this time.

All future correspondence will be directed to the first named inventor Jonathan Paul Tanger at the address indicated below.

There is an outstanding Office action mailed July 9, 2010 that requires a reply from the applicant.

Telephone inquiries concerning this decision should be directed to Terri Johnson at 571-272-2991.

/Terri Johnson/
Terri Johnson
Petitions Examiner
Office of Petitions

cc: **Jonathan Paul Tanger**
11800 NW 21 Court
Plantation, FL 33323

UNITED STATES PATENT AND TRADEMARK OFFICE

UNITED STATES DEPARTMENT OF COMMERCE
United States Patent and Trademark Office
Address: COMMISSIONER FOR PATENTS
P.O. Box 1450
Alexandria, Virginia 22313-1450
www.uspto.gov

APPLICATION NUMBER	FILING OR 371(C) DATE	FIRST NAMED APPLICANT	ATTY. DOCKET NO./TITLE
12/470,029	05/21/2009	Jonathan Paul Tanger	10113

CONFIRMATION NO. 3036

POWER OF ATTORNEY NOTICE

54569
RUBEN ALCOBA, ESQ.
3399 NW 72 AVENUE
SUITE211
MIAMI, FL 33122

OC000000043823385

Date Mailed: 10/04/2010

NOTICE REGARDING CHANGE OF POWER OF ATTORNEY

This is in response to the Power of Attorney filed 09/13/2010.

- The withdrawal as attorney in this application has been accepted. Future correspondence will be mailed to the new address of record. 37 CFR 1.33.

/tsjohnson/

Office of Data Management, Application Assistance Unit (571) 272-4000, or (571) 272-4200, or 1-888-786-0101

UNITED STATES PATENT AND TRADEMARK OFFICE

Commissioner for Patents
United States Patent and Trademark Office
P.O. Box 1450
Alexandria, VA 22313-1450
www.uspto.gov

Decision Date : December 3, 2011

In re Application of :
Dale Nichols

DECISION ON PETITION

Application No: 12470057

Filed: 21-May-2009

Attorney Docket No: 2825322-40

This is an electronic decision on the petition, filed December 3, 2011 , which is being treated as a petition under 37 CFR 1.137(b) to revive the instant nonprovisional application for failure to timely notify the U.S. Patent and Trademark Office (USPTO) of the filing of an application in a foreign country, or under a multinational treaty that requires publication of applications eighteen months after filing. See 37 CFR 1.137(f).

The petition is **GRANTED.**

Petitioner states that the present nonprovisional application is the subject of a foreign or international application filed on 05-21-2010
However, the USPTO was unintentionally not notified of this filing within 45 days subsequent to the filing of the subject application in a foreign country.

In view of the above, this application became abandoned pursuant to 35 U.S.C. § 122(b)(2)(B)(iii) and 37 CFR 1.213(c) for failure to timely notify the Office of the filing of an application in a foreign country, or under a multilateral international agreement that requires publication of applications 18 months after filing.

A petition under 37 CFR 1.137(f) must be accompanied by:
(1) the reply which is met by the notification of such filing in a foreign country or under a multinational treaty;
(2) the petition fee as set forth in 37 CFR 1.17(m); and
(3) a statement that the entire delay in filing the required notice of a foreign or international filing from the due date for the required notice until the filing of a grantable petition under 37 CFR 1.137(b) was unintentional.

The instant petition has been found to be in compliance with 37 CFR 1.137(b). Accordingly, the failure to timely notify the USPTO of a foreign or international filing within 45 days after the date of filing of such foreign or international application as provided by 35 U.S.C. § 122(b)(2)(B)(iii) and 37 CFR 1.213(c) is accepted as having been unintentionally delayed.

The previous Request and Certification under 35 U.S.C. § 122(b)(2)(B)(i) has been rescinded. A Notice Regarding Rescission of Nonpublication Request which sets forth the projected publication date will be viewable in Private PAIR within one (1) business day.

It is not apparent whether the person signing the statement of unintentional delay was in a position to have firsthand or direct knowledge of the facts and circumstances of the delay at issue. Nevertheless, such statement is being treated as having been made as the result of a reaso nable inquiry into the facts and circumstances of such delay. See 37 CFR 10.18(b) and Changes to Patent Practice and Procedure; Final Rule Notice, 62 Fed. Reg. 53131, 53178 (October 10, 1997), 1203 Off. Gaz. Pat. Office 63, 103 (October 21, 1997). In the event that such an inquiry has not been made, petitioner must make such an inquiry. If such inquiry results in the discovery that it is not correct that the entire delay in filing the required reply from the due date for the reply until the filing of a grantable petition pursuant to 37 CFR 1.137(b) was unintentional, petitioner must notify the Office.

This application file is being directed to the Office of Data Management.

Telephone inquiries concerning this decision should be directed to the Patent Electronic Business Center (EBC) at 866-217-9197.

Office of Petitions

Doc Code: PET.AUTO Document Description: Petition automatically granted by EFS-Web	PTO/SB/64a U.S. Patent and Trademark Office Department of Commerce

Electronic Petition Request	**PETITION FOR REVIVAL OF AN APPLICATION FOR PATENT ABANDONED FOR FAILURE TO NOTIFY THE OFFICE OF A FOREIGN OR INTERNATIONAL FILING UNDER 37 CFR 1.137(f)**
Application Number	12470057
Filing Date	21-May-2009
First Named Inventor	Dale Nichols
Art Unit	2612
Examiner Name	HUNG NGUYEN
Attorney Docket Number	2825322-40
Title	HARD COVER PRODUCT WITH CONCEALED PRINTED SECURITY DEVICE

The above-identified application became abandoned pursuant to 35 U.S.C. 122(b)(2)(B)(iii) for failure to timely notify the Office of the filing of an application in a foreign country or under a multinational treaty that requires publication of applications eighteen months after filing. The date of abandonment is the day after the expiration date of the forty-five (45) day period set in 35 U.S.C. 122(b)(2)(B)(iii).

PURSUANT TO 37 CFR 1.137(f), APPLICANT HEREBY PETITIONS FOR REVIVAL OF THIS APPLICATION UNDER 37 CFR 1.137(b).

A grantable petition requires the following items:
(1) Petition fee;
(2) Reply;
(3) Statement that the entire delay was unintentional.

Petition fee
The petition fee under 37CFR 1.17(m) is attached.

☐ Applicant claims SMALL ENTITY status. See 37 CFR 1.27.

☐ Applicant is no longer claiming SMALL ENTITY status. See 37 CFR 1.27(g)(2).

☐ Applicant(s) status remains as SMALL ENTITY.

☒ Applicant(s) status remains as other than SMALL ENTITY.

Notice of Foreign or International Filing (35 U.S.C. 122(b)(2)(B)(iii) and 37 CFR 1.213(c))

☒ Subsequent to the filing of the above-identified application, an application was filed in another country, or under a multinational international treaty (e.g., filed under the Patent Cooperation Treaty), that requries publication of applications eighteen months after the filing. The filing date of the subsequently filed foreign or international application is 05-21-2010

☒ The non-publication request has been filed on 21-May-2009

☒ STATEMENT: The entire delay in filing the required notice of a foreign or international filing from the due date for the required notice until the filing of a grantable petition under 37 CFR 1.137(b) was unintentional.

THIS PORTION MUST BE COMPLETED BY THE SIGNATORY OR SIGNATORIES

I certify, in accordance with 37 CFR 1.4(d)(4) that I am:

○ An attorney or agent registered to practice before the Patent and Trademark Office who has been given power of attorney in this application.

◉ An attorney or agent registered to practice before the Patent and Trademark Office, acting in a representative capacity.

○ A sole inventor

○ A joint inventor; I certify that I am authorized to sign this submission on behalf of all of the inventors.

○ A joint inventor; all of whom are signing this e-petition.

○ The assignee of record of the entire interest that has properly made itself of record pursuant to 37 CFR 3.71.

Signature	/carl m davis ii/
Name	Carl M. Davis II
Registration Number	31502

UNITED STATES PATENT AND TRADEMARK OFFICE

Commissioner for Patents
United States Patent and Trademark Office
P.O. Box 1450
Alexandria, VA 22313-1450
www.uspto.gov

DUNLAP CODDING, P.C.
PO BOX 16370
OKLAHOMA CITY, OK 73113

MAILED

DEC 30 2010

OFFICE OF PETITIONS

In re Application of	:	
Donald E. WEDER	:	
Application No. 12/470,066	:	DECISION ON PETITION
Filed: May 21, 2009	:	UNDER 37 CFR 1.137(b)
Attorney Docket No: **8404.492**	:	

This is a decision on the petition under the unintentional provisions of 37 CFR 1.137(b), filed July 22, 2010, to revive the above-identified application.

The petition is **GRANTED**.

The application became abandoned for failure to reply in a timely manner to the non-final Office action mailed, January 19, 2010, which set a shortened statutory period for reply of three (3) months. No extensions of time under the provisions of 37 CFR 1.136(a) were obtained. Accordingly, the application became abandoned on April 20, 2010.

The petition satisfies the requirements of 37 CFR 1.137(b) in that petitioner has supplied (1) the reply in the form of a continuing application under 37 CFR 1.53(b); (2) the petition fee of $1620; and (3) a proper statement of unintentional delay.

This application is being revived solely for purposes of continuity. As continuity has been established by this decision, the application is again abandoned in favor of continuing application No. 12/841,509.

Telephone inquiries concerning this decision should be directed to Monica A. Graves at (571) 272-7253.

Thurman K. Page
Petitions Examiner
Office of Petitions

UNITED STATES PATENT AND TRADEMARK OFFICE

Commissioner for Patents
United States Patent and Trademark Office
P.O. Box 1450
Alexandria, VA 22313-1450
www.uspto.gov

SCHWEGMAN, LUNDBERG & WOESSNER, P.A.
P.O. BOX 2938
MINNEAPOLIS MN 55402

MAILED

OCT 24 2011

OFFICE OF PETITIONS

In re Application of	:	
PALSGROVE, Boyd et al.	:	
Application No. 12/470,077	:	DECISION ON PETITION
Filed: May 21, 2009	:	TO WITHDRAW
Attorney Docket No. **2414.003US1**	:	FROM RECORD
	:	

This is a decision on the Request to Withdraw as attorney or agent of record under 37 C.F.R. § 1.36(b), filed September 30, 2011.

The request is **NOT APPROVED**.

The Office will no longer accept address changes to a new practitioner or law firm filed with a Request, absent the filing of a power of attorney to the new representative. The Office will either change the correspondence address of record to the most current address information provided for the assignee of the entire interest who properly became of record under 37 CFR 3.71 or, if no assignee of the entire interest has properly been made of record under 37 CFR 3.71, the most current address information provided for the first named inventor.

37 CFR 3.71(c) states:

An assignee becomes of record either in a national patent application or a reexamination proceeding by filing a statement in compliance with § 3.73(b) that is signed by a party who is authorized to act on behalf of the assignee.

Therefore, as there is currently no statement under 37 CFR 3.73(b) of record in the instant application, the Office cannot change the correspondence address to the address on the Request for Withdrawal.

All future communications from the Office will continue to be directed to the above-listed address until otherwise notified by applicant.

Telephone inquiries concerning this decision should be directed to the undersigned at 571-272-4231.

Michelle R. Eason
Paralegal Specialist
Office of Petitions

cc: **WHITE BEAR TECHNOLOGIES**
900 LONG LAKE ROAD, #110
NEW BRIGHTON, MN 55112

OPAP IAP4 AUG 16 2010 PATENT & TRADEMARK OFFICE

PATENT

IN THE UNITED STATES PATENT AND TRADEMARK OFFICE
(Attorney Docket No. 01662/A528US1)

In re Application of:		
	Suhail Ahmad et al.	Examiner: Willis, Douglas M
Serial No.:	12/470,137	Group Art Unit: 1624
Filed:	May 21, 2009	Confirmation No. 3248
For:	Varenicline tosylate, an intermediate in the preparation process of varenicline l-tartrate	

Mail Stop Petitions
Commissioner for Patents
P.O. Box 1450
Alexandria, VA 22313-1450

I hereby certify that this correspondence is being deposited with the United States Postal Service with sufficient postage as first class mail in an envelope addressed to: Mail Stop Petitions, Commissioner for Patents, P.O. Box 1450, Alexandria, VA 22313-1450.

Date: August 12, 2010 Signature: Neil H. Benowitz

Petition to Make Special Under 37 CFR 1.102(d)

Sir:

Applicants petition that the instant application be made special under the Patent Application Backlog Reduction Stimulus Plan (75 FR 36063 (June 24, 2010)). The petition is according to 37 CFR 1.102(d). This petition to make special is based on the express abandonment of another copending application according to 37 CFR 1.138(a).

The copending application that is expressly abandoned is application no. 12/231,438, filed September 2, 2008. A copy of the letter of express abandonment for the copending application is attached. The instant application for which special status is sought and the copending application are commonly owned by Teva Pharmaceuticals Industries LTD. The assignment records can be found in reel 023214 frame 0131 for the instant application, and on reel 021999 frame 0509 for the copending application.

Applicants have not filed a petition to make special under the Patent Application Backlog Reduction Stimulus Plan in more than 14 other applications. In addition, Applicants agree to make an election without traverse in a telephonic interview if special status is granted to the instant application.

The petition fee of $130.00 under 37 CFR 1.102(d) and 37 CFR 1.17(h) is waived under this plan. However, if the petition fee or any other fees are due, which may be required for the filing of this petition, please charge the fees to Kenyon & Kenyon, LLP Deposit Account No. 11-0600.

Respectfully Submitted,

Dated: August 12, 2010

By: Alan P. Force

Alan P. Force
(Reg. No. 39,673)
One Broadway
New York, New York 10004
(212) 425-7200
(212) 425-5288 (Fax)
CUSTOMER NUMBER 26646

OPAP IAP4 AUG 16 2010 PATENT & TRADEMARK OFFICE

PATENT

IN THE UNITED STATES PATENT AND TRADEMARK OFFICE
(Attorney Docket No. 01662/A461US1)

In re Application of:		)	
	Lorand Szabo et al.	)	Examiner: Berch, Mark L
Serial No.:	12/231,438	)	Group Art Unit: 1624
Filed:	September 2, 2008	)	Confirmation No. 3514
For:	Process for preparing intermediates of ezetimibe by microbial reduction	)	

Mail Stop Express Abandonment
Commissioner for Patents
P.O. Box 1450
Alexandria, VA 223130-1450

I hereby certify that this correspondence is being deposited with the United States Postal Service with sufficient postage as first class mail in an envelope addressed to: Mail Stop Express Abandonment, Commissioner for Patents, P.O. Box 1450, Alexandria, VA 22313-1450.

Date: August 12, 2010 Signature: Neil Benowitz
Neil H. Benowitz

Letter of Express Abandonment Under 37 CFR 1.138(a)

Sir:

The instant application is expressly abandoned under 37 CFR 1.138(a). The express abandonment of the instant application is made under the Patent Application Backlog Reduction Stimulus Plan (75 FR 36063 (June 24, 2010)).

Applicants have not and will not file an application claiming benefit of the expressly abandoned application. Applicants have not and will not file a new application that claims the same invention claimed in the expressly abandoned application. Applicants agree not to request refund of fees paid in the expressly abandoned application.

Applicants believe that no fees are due. If any fees are due, which may be required for the filing of this letter of express abandonment, please charge the fees to Kenyon & Kenyon, LLP Deposit Account No. 11-0600.

Respectfully Submitted,

Dated: August 12, 2010

By: Alan P. Force

Alan P. Force
(Reg. No. 39,673)
One Broadway
New York, New York 10004
(212) 425-7200
(212) 425-5288 (Fax)
CUSTOMER NUMBER 26646

UNITED STATES PATENT AND TRADEMARK OFFICE

Commissioner for Patents
United States Patent and Trademark Office
P.O. Box 1450
Alexandria, VA 22313-1450
www.uspto.gov

MAILED

AUG 27 2010

OFFICE OF PETITIONS

KENYON & KENYON LLP
ONE BROADWAY
NEW YORK NY 10004

In re Application of :
AHMAD et al. :
Application No. 12/470,137 :
Filed: May 21, 2009 :
Attorney Docket No. **01662/A528US1** :

DECISION ON PETITION
TO MAKE SPECIAL
37 CFR 1.102

This is a decision on the petition under 37 CFR 1.102, filed August 16, 2010, to make the above-identified application special under the Patent Application Backlog Reduction Stimulus Plan which is a pilot program set forth at 74 Federal Register Notice 62285 (November 27, 2009) and 75 Federal register Notice 36063 (June 24, 2010).

The petition is **GRANTED**.

A grantable petition to make an application special under 37 CFR 1.102 and the pilot program as set forth in 74 FR 62285 and 75 FR 36063 must be directed to a nonprovisional application filed prior to October 1, 2009.

The USPTO will accord special status for examination under Patent Application Backlog Reduction Stimulus Plan under the following conditions:

(1) The application for which special status is sought is a nonprovisional application that has an actual filing date earlier than October 1, 2009;

(2) The applicant has another copending nonprovisional application that has an actual filing date earlier than October 1, 2009, and is complete under 37 CFR 1.53;

(3) The application for which special status is sought and the other copending nonprovisional application either are owned by the same party as of October 1, 2009, or name at least one inventor in common;

(4) The applicant files a letter of express abandonment under 37 CFR 1.138(a) in the copending nonprovisional application before it has been taken up for examination and

a) include a statement that the applicant has not and will not file a new application that claims the same invention claimed in the expressly abandoned application;

b) includes with the letter of express abandonment a statement that the applicant has not and will not file an application that claims the benefit of the

expressly abandoned application under any provision of title 35, United States Code, and

c) the applicant agrees not to request a refund of any fees paid in the expressly abandoned application; and

(5) The applicant files a petition under 37 CFR 1.102 in the application for which special status is sought that

a) includes a specific identification of the relationship between the applications that qualifies the application for special status;

b) identifies, by application number if available, the application that is being expressly abandoned;

c) provides a statement certifying that applicant has not filed petitions in more than fourteen (14) other applications requesting special status under this program; and

d) provides a statement that applicant agrees to make an election without traverse in a telephonic interview if the Office determines that the claims of the application to be made special are directed to two or more independent and distinct inventions.

The requirement for a fee for consideration of the petition to make special for applications pertaining to Patent Application Backlog Reduction Stimulus Plan has been waived.

The instant petition complies with the conditions required under Patent Application Backlog Reduction Stimulus Plan. Accordingly, the above-identified application has been accorded "special" status.

Telephone inquires concerning this decision should be directed to Brian W. Brown at 571-272-5338.

All other inquires concerning either the examination or status of the application should be directed to the Technology Center.

The application is being forwarded to the Office of Patent Application Processing for further processing commensurate with this decision.

Brian W. Brown
Petitions Examiner
Office of Petitions

UNITED STATES PATENT AND TRADEMARK OFFICE

Commissioner for Patents
United States Patent and Trademark Office
P.O. Box 1450

MAILED

FEB 28 2012

OFFICE OF PETITIONS

CROWELL & MORING LLP
INTELLECTUAL PROPERTY GROUP
P.O. BOX 14300
WASHINGTON DC 20044-4300

In re Application of	: DECISION ON REQUEST TO
Eisaku FUKUCHI et al.	: PARTICIPATE IN PPH PROGRAM
Application No. 12/470,204	: AND PETITION TO MAKE SPECIAL
Filed: May 21, 2009	: UNDER 37 CFR 1.102(a)
Atty. Docket No.: 056204.61641US	:

For: DIAGNOSTIC CONTROL APPARATUS FOR INTERNAL COMBUSTION ENGINES

This is a decision on the request to participate in the Patent Prosecution Highway (PPH) program and the petition under 37 CFR 1.102(a), filed February 8, 2012 to make the above-identified application special.

The petition and request are **GRANTED**.

A grantable request to participate in the PPH (patent prosecution highway) program and petition to make special require:

1. The U.S. application is a Paris convention application that either validly claims priority under 35 U.S.C. 119(a) and 37 CFR 1.55 to one or more application filed in the JPO or to a PCT application that contains no priority claims, or is a national stage application under the PCT that either validly claims priority to an application filed in the JPO or to a PCT application that contains no priority claims, or that contains no priority claim, or is a bypass application filed under 35 U.S.C. 111(a) which validly claims benefit under 35 U.S.C. 120 to a PCT application that validly claims priority to an application filed in the JPO, to a PCT application that contains no priority claims, or contain no priority claim;

2. Applicant must ensure all the claims in the U.S. application sufficiently correspond or amended to sufficiently correspond to the allowable/patentable claim(s) in the JPO application and submit a claim correspondence table in English;

3. Examination of the U.S. application has not begun;

4. Applicant must submit a copy of the office action(s) just prior to the "Decision to Grant a Patent" from each of the JPO application(s) containing the allowable/patentable claim(s), or if the allowable/patentable claim(s) are from a "Notification of Reasons for Refusal" then the Notification of Reasons for Refusal, or if the JPO application is a first action allowance then no office action from the JPO is necessary should be indicated on the request/petition form, and an English language translation of the JPO Office action if submitted; and

5. Applicant must submit an IDS listing the documents cited by the JPO examiner in the JPO office action, unless already submitted in this application, and copies of the documents except U.S. patents or U.S. patent application publications, unless already submitted in this application.

The request to participate in the PPH program and petition comply with the above requirements. Accordingly, the above-identified application has been accorded "special" status.

Telephone inquiries concerning this decision should be directed to Robert DeWitty, Petition Attorney, Office of Petitions at 571-272-8427.

All other inquiries concerning the examination or status of the application is accessible in the PAIR system at http://www.uspto.gov/ebc/index.html.

This application will be forwarded to Technology Center Art Unit 3747 for action commensurate with this decision.

David Bucci
Petitions Examiner
Office of Petitions

UNITED STATES PATENT AND TRADEMARK OFFICE

Commissioner for Patents
United States Patent and Trademark Office
P.O. Box 1450
Alexandria, VA 22313-1450
www.uspto.gov

MAILED

SEP 28 2010

OFFICE OF PETITIONS

VERIZON
PATENT MANAGEMENT GROUP
1320 NORTH COURT HOUSE ROAD
9TH FLOOR
ARLINGTON VA 22201-2909

In re Application of	:	
William C. G. Ortel	:	
Application No. 12/470,319	:	DECISION ON PETITION
Filed: May 21, 2009	:	
Attorney Docket No. 02-1507 CON2	:	

This is a decision on the petition under the unintentional provisions of 37 CFR 1.137(b), filed March 09, 2010, to revive the above-identified application.

The petition is **DISMISSED**.

Any request for reconsideration of this decision must be submitted within TWO (2) MONTHS from the mail date of this decision. Extensions of time under 37 CFR 1.136(a) are permitted. The reconsideration request should include a cover letter entitled "Renewed Petition under 37 CFR 1.137(b)." This is **not** a final agency action within the meaning of 5 U.S.C. § 704.

The application became abandoned for failure to reply in a timely manner to the Notice to File Corrected Application Papers (Notice), mailed June 04, 2009. The Notice set a period for reply of two (2) months from the mail date of the Notice. No extensions of time under the provisions of 37 CFR 1.136(a) were obtained. Accordingly, the application became abandoned on August 05, 2009.

A grantable petition under 37 CFR 1.137(b) must be accompanied by: (1) the required reply, unless previously filed; (2) the petition fee as set forth in 37 CFR 1.17(m); (3) a statement that the entire delay in filing the required reply from the due date for the reply until the filing of a grantable petition pursuant to 37 CFR 1.137(b) was unintentional; and (4) any terminal disclaimer (and fee as set forth in 37 CFR 1.20(d)) required by 37 CFR 1.137(d). Where there is a question as to whether either the abandonment or the delay in filing a petition under 37 CFR 1.137 was unintentional, the Director may require additional information. See MPEP 711.03(c)(II)(C) and (D). The instant petition lacks item(s) (1) in that the instant petition lacks a statement that the substitute specification filed March 09, 2009 contains no new matter, as required by 37 CFR 1.125(b).

It is not apparent whether the person signing the statement of unintentional delay was in a position to have firsthand or direct knowledge of the facts and circumstances of the delay at issue. Nevertheless, such statement is being treated as having been made as the result of a reasonable inquiry into the facts and circumstances of such delay. See 37 CFR 10.18(b) and Changes to Patent Practice and Procedure; Final Rule Notice, 62 Fed. Reg. 53131, 53178 (October 10, 1997), 1203 Off. Gaz. Pat. Office 63, 103

(October 21, 1997). In the event that such an inquiry has not been made, petitioner must make such an inquiry. If such inquiry results in the discovery that it is not correct that the entire delay in filing the required reply from the due date for the reply until the filing of a grantable petition pursuant to 37 CFR 1.137(b) was unintentional, petitioner must notify the Office.

Further correspondence with respect to this matter should be addressed as follows:

By Mail: Mail Stop PETITION
Commissioner for Patents
P. O. Box 1450
Alexandria, VA 22313-1450

By hand: U. S. Patent and Trademark Office
Customer Service Window, Mail Stop Petitions
Randolph Building
401 Dulany Street
Alexandria, VA 22314

The centralized facsimile number is **(571) 273-8300.**

Telephone inquiries concerning this decision should be directed to Tredelle Jackson at (571) 272-2783.

Ramesh Krishnamurthy

Ramesh Krishnamurthy
Petitions Examiner
Office of Petitions

UNITED STATES PATENT AND TRADEMARK OFFICE

Commissioner for Patents
United States Patent and Trademark Office
P.O. Box 1450
Alexandria, VA 22313-1450
www.uspto.gov

VERIZON
PATENT MANAGEMENT GROUP
1320 NORTH COURT HOUSE ROAD
9TH FLOOR
ARLINGTON VA 22201-2909

MAILED

NOV 29 2010

OFFICE OF PETITIONS

In re Application of	:	
William C. G. Ortel	:	
Application No. 12/470,319	:	DECISION ON PETITION
Filed: May 21, 2009	:	
Attorney Docket No. 02-1507 CON2	:	

This is a decision on the renewed petition under the unintentional provisions of 37 CFR 1.137(b), filed October 18, 2010, to revive the above-identified application.

The petition is **GRANTED**.

The application became abandoned for failure to reply in a timely manner to the Notice to File Corrected Application Papers (Notice), mailed June 04, 2009. The Notice set a period for reply of two (2) months from the mail date of the Notice. No extensions of time under the provisions of 37 CFR 1.136(a) were obtained. Accordingly, the application became abandoned on August 05, 2009.

The petition satisfies the requirements of 37 CFR 1.137(b) in that petitioner has supplied (1) the reply in the form of a substitute specification, (2) the petition fee of $1620, and (3) a proper statement of unintentional delay. Accordingly, the reply to the Notice to File Corrected Application Papers of June 04, 2009 is accepted as having been unintentionally delayed.

It is not apparent whether the person signing the statement of unintentional delay was in a position to have firsthand or direct knowledge of the facts and circumstances of the delay at issue. Nevertheless, such statement is being treated as having been made as the result of a reasonable inquiry into the facts and circumstances of such delay. See 37 CFR 10.18(b) and Changes to Patent Practice and Procedure; Final Rule Notice, 62 Fed. Reg. 53131, 53178 (October 10, 1997), 1203 Off. Gaz. Pat. Office 63, 103 (October 21, 1997). In the event that such an inquiry has not been made, petitioner must make such an inquiry. If such inquiry results in the discovery that it is not correct that the entire delay in filing the required reply from the due

date for the reply until the filing of a grantable petition pursuant to 37 CFR 1.137(b) was unintentional, petitioner must notify the Office.

Telephone inquiries concerning this decision should be directed to Tredelle Jackson at (571) 272-2783.

The application is being referred to the Office of Patent Application Processing for further processing.

Ramesh Krishnamurthy
Petitions Examiner
Office of Petitions

UNITED STATES PATENT AND TRADEMARK OFFICE

Commissioner for Patents
United States Patent and Trademark Office
P.O. Box 1450
Alexandria, VA 22313-1450
www.uspto.gov

QUALCOMM INCORPORATED
5775 MOREHOUSE DR.
SAN DIEGO CA 92121

MAILED
NOV 16 2010
OFFICE OF PETITIONS

In re Application of
Hadjchristos et al.
Application No.12/470,418
Filed: May 21, 2009
Attorney Docket No. 082622

ON PETITION

This is a decision on the renewed petition under the unintentional provisions of 37 CFR 1.137(b), filed September 15, 2010, to revive the above-identified application.

The petition is **GRANTED**.

This above-identified application became abandoned for failure to file a response to a Notice to File Missing Parts, which was mailed on June 11, 2009. The Notice to File Missing Parts set an extendable two (2) month period for reply. No timely request for extension of time was obtained under the provisions of 37 CFR §1.136(a). Accordingly, this application became abandoned on August 12, 2009. A Notice of Abandonment was mailed February 24, 2010. A petition under 37 CFR 1.137(b) was dismissed on June 15, 2010.

The petition satisfies the requirements of 37 CFR 1.137(b) in that petitioner has supplied (1) the reply in the form of the declaration and surcharge (2) the petition fee of $1620, and (3) a proper statement of unintentional delay.

This application is being referred to the Office of Patent Application Processing for pre-examination processing.

Telephone inquiries concerning this decision should be directed to the undersigned at (571) 272-3215.

Charlema Grant
Petitions Attorney
Office of Petitions

UNITED STATES PATENT AND TRADEMARK OFFICE

Commissioner for Patents
United States Patent and Trademark Office
P.O. Box 1450
Alexandria, VA 22313-1450
www.uspto.gov

GREENBERG TRAURIG (NJ)
200 PARK AVE.
P.O. BOX 677
FLORHAM PARK, NJ 07932

MAILED
SEP 07 2011
OFFICE OF PETITIONS

In re Application of	:	
Nikolaos Tezapsidis, et. al.	:	
Application No. 12/470,427	:	DECISION GRANTING PETITION
Filed: May 21, 2009	:	UNDER 37 CFR 1.78(a)(3) AND (a)(6)
Attorney Docket No. 117468.010201	:	

This is a decision on the renewed petition under 37 CFR §§ 1.78(a)(3) and 1.78(a)(6), filed August 22, 2011, to accept an unintentionally delayed claim under 35 U.S.C. §§ 120 and 119(e) for the benefit of priority to the prior-filed nonprovisional and provisional applications set forth in the concurrently filed amendment.

The petition is **DISMISSED**.

A petition for acceptance of a claim for late priority under 37 CFR §§ 1.78(a)(3) and 1.78(a)(6) is only applicable to those applications filed on or after November 29, 2000 and after the expiration of the period specified in 37 CFR §§ 1.78(a)(2)(ii) and 1.78(a)(5)(ii). In addition, the petition under 37 CFR §§ 1.78(a)(3) and 1.78(a)(6) must be accompanied by:

(1) the reference required by 35 U.S.C. §§ 120 and 119(e) and 37 CFR §§ 1.78(a)(2)(i) and 1.78(a)(5)(i) of the prior-filed application, unless previously submitted;
(2) the surcharge set forth in § 1.17(t); and
(3) a statement that the entire delay between the date the claim was due under 37 CFR §§ 1.78(a)(2)(ii) and 1.78(a)(5)(ii) and the date the claim was filed was unintentional. The Director may require additional where there is a question whether the delay was unintentional.

The petition does not comply with item (1).

The amendment is not acceptable as drafted since it improperly incorporates by reference the prior-filed applications. An incorporation by reference statement added after an application's filing date is not effective because no new matter can be added to an application after its filing date (*see* 35 U.S.C. § 132(a)). If an incorporation by reference statement is included in an amendment to the specification to add a benefit claim under 35 U.S.C. § 120 after the filing date of the application, the amendment would not be proper. When a benefit claim under 35 U.S.C. § 120 is submitted after the filing of an application, the reference to the prior application cannot include an incorporation by reference statement of the prior application. *See* Dart Industries v. Banner, 636 F.2d 684, 207 USPQ 273 (C.A.D.C. 1980). *Note* MPEP §§ 201.06(c) and 608.04(b).

Additionally, it is noted that petitioner filed an amendment and an Application Data Sheet (ADS) on August 22, 2011. However, if petitioner desires to file an amendment, regardless of the filing of an ADS, the incorporation by reference statement must be removed from the amendment. Therefore, before the petition under 37 CFR §§ 1.78(a)(3) and 1.78(a)(6) can be granted, a renewed petition and either a supplemental ADS or a substitute amendment (complying with the provisions of 37 CFR 1.121 and 37 CFR 1.76(b)(5)) is required.

Further correspondence with respect to this decision should be addressed as follows:

By mail: Mail Stop PETITIONS
Commissioner for Patents
Post Office Box 1450
Alexandria, VA 22313-1450

By hand: Customer Service Window
Mail Stop Petitions
Randolph Building
40I Dulany Street
Alexandria, VA 22314

By fax: (571) 273-8300
ATTN: Office of Petitions

Any questions concerning this matter may be directed to the undersigned at (571) 272-3226. All other inquiries concerning either the examination procedures or status of the application should be directed to the Technology Center.

/Andrea Smith/
Andrea Smith
Petitions Examiner
Office of Petitions

UNITED STATES PATENT AND TRADEMARK OFFICE

Commissioner for Patents
United States Patent and Trademark Office
P.O. Box 1450
Alexandria, VA 22313-1450
www.uspto.gov

GREENBERG TRAURIG (NJ)
200 PARK AVE.
P.O. BOX 677
FLORHAM PARK, NJ 07932

MAILED

SEP 20 2011

OFFICE OF PETITIONS

In re Application of	:	
Nikolaos Tezapsidis, et. al.	:	
Application No. 12/470,427	:	DECISION GRANTING PETITION
Filed: May 21, 2009	:	UNDER 37 CFR 1.78(a)(3) AND (a)(6)
Attorney Docket No. 117468.010201	:	

This is a decision on the renewed petition under 37 CFR §§ 1.78(a)(3) and 1.78(a)(6), filed September 15, 2011, to accept an unintentionally delayed claim under 35 U.S.C. §§ 120 and 119(e) for the benefit of priority to the prior-filed nonprovisional and provisional applications set forth in the concurrently filed amendment.

The petition is **GRANTED**.

A petition for acceptance of a claim for late priority under 37 CFR §§ 1.78(a)(3) and 1.78(a)(6) is only applicable to those applications filed on or after November 29, 2000. Further, the petition is appropriate only after the expiration of the period specified in 37 CFR §§ 1.78(a)(2)(ii) and 1.78(a)(5)(ii). In addition, the petition under 37 CFR §§ 1.78(a)(3) and 1.78(a)(6) must be accompanied by:

(1) the reference required by 35 U.S.C. §§ 120 and 119(e) and 37 CFR §§ 1.78(a)(2)(i) and 1.78(a)(5)(i) of the prior-filed application, unless previously submitted;

(2) the surcharge set forth in § 1.17(t); and

(3) a statement that the entire delay between the date the claim was due under 37 CFR §§ 1.78(a)(2)(ii) and 1.78(a)(5)(ii) and the date the claim was filed was unintentional. The Director may require additional information where there is a question whether the delay was unintentional.

Additionally, the instant nonprovisional application must be pending at the time of filing of the reference to the prior-filed provisional application as required by 37 CFR 1.78(a)(5)(ii). Further, the nonprovisional application claiming the benefit of the prior-filed provisional application must have been filed within twelve months of the filing date of the prior-filed provisional application.

Since all the above requirements have been satisfied, the late claim for benefit of priority under 35 U.S.C. §§ 120 and 119(e) is accepted as being unintentionally delayed.

The granting of the petition to accept the delayed benefit claim to the prior-filed applications under 37 CFR §§ 1.78(a)(3) and 1.78(a)(6) should not be construed as meaning that this application is entitled to the benefit of the filing date of the prior-filed applications. In order for this application to be entitled to the benefit of the prior-filed applications, all other requirements under 35 U.S.C. §§120 and 1.78(a)(1) and (a)(2) and under 35 U.S.C. §119(e) and 37 CFR 1.78(a)(4) and (a)(5) must be met. Similarly, the fact that the corrected Filing Receipt accompanying this decision on petition includes the prior-filed applications should not be construed as meaning that applicant is entitled to the claim for benefit of priority to the prior-filed applications noted thereon. Accordingly, the examiner will, in due course, consider this benefit claim and determine whether the application is entitled to the benefit of the earlier filing date.

A corrected Filing Receipt, which includes the priority claim to the prior-filed applications, accompanies this decision on petition.

This application is being forwarded to Technology Center Art Unit 1649 for consideration by the examiner of the claim under 35 U.S.C. § §120 and 119(e) of the prior-filed nonprovisional and provisional applications.

Any questions concerning this matter may be directed to the undersigned at (571) 272-3226. All other inquiries concerning either the examination procedures or status of the application should be directed to the Technology Center.

Andrea Smith
Petitions Examiner
Office of Petitions

ATTACHMENT: Corrected Filing Receipt

UNITED STATES PATENT AND TRADEMARK OFFICE

UNITED STATES DEPARTMENT OF COMMERCE
United States Patent and Trademark Office
Address: COMMISSIONER FOR PATENTS
P.O. Box 1450
Alexandria, Virginia 22313-1450
www.uspto.gov

APPLICATION NUMBER	FILING or 371(c) DATE	GRP ART UNIT	FIL FEE REC'D	ATTY.DOCKET.NO	TOT CLAIMS	IND CLAIMS
12/470,427	05/21/2009	1649	683	117468.010201	14	2

CONFIRMATION NO. 3854

REPLACEMENT FILING RECEIPT

OC000000049918513

67395
GREENBERG TRAURIG (NJ)
200 PARK AVE.
P.O. BOX 677
FLORHAM PARK, NJ 07932

Date Mailed: 09/20/2011

Receipt is acknowledged of this non-provisional patent application. The application will be taken up for examination in due course. Applicant will be notified as to the results of the examination. Any correspondence concerning the application must include the following identification information: the U.S. APPLICATION NUMBER, FILING DATE, NAME OF APPLICANT, and TITLE OF INVENTION. Fees transmitted by check or draft are subject to collection. Please verify the accuracy of the data presented on this receipt. **If an error is noted on this Filing Receipt, please submit a written request for a Filing Receipt Correction. Please provide a copy of this Filing Receipt with the changes noted thereon. If you received a "Notice to File Missing Parts" for this application, please submit any corrections to this Filing Receipt with your reply to the Notice. When the USPTO processes the reply to the Notice, the USPTO will generate another Filing Receipt incorporating the requested corrections**

Applicant(s)
Nikolaos Tezapsidis, West Orange, NJ;
Steven Greco, Carlstadt, NJ;

Power of Attorney: The patent practitioners associated with Customer Number 67395

Domestic Priority data as claimed by applicant
This appln claims benefit of 61/055,009 05/21/2008
and is a CIP of 11/516,224 09/06/2006
which claims benefit of 60/714,948 09/07/2005

Foreign Applications (You may be eligible to benefit from the **Patent Prosecution Highway** program at the USPTO. Please see http://www.uspto.gov for more information.)

Permission to Access - A proper **Authorization to Permit Access to Application by Participating Offices** (PTO/SB/39 or its equivalent) has been received by the USPTO.

If Required, Foreign Filing License Granted: 06/04/2009

The country code and number of your priority application, to be used for filing abroad under the Paris Convention, is **US 12/470,427**

Projected Publication Date: Not Applicable

Non-Publication Request: No

Early Publication Request: No
**** SMALL ENTITY ****

Title

METHODS FOR TREATING PROGRESSIVE COGNITIVE DISORDERS RELATED TO NEUROFIBRILLARY TANGLES

Preliminary Class

514

PROTECTING YOUR INVENTION OUTSIDE THE UNITED STATES

Since the rights granted by a U.S. patent extend only throughout the territory of the United States and have no effect in a foreign country, an inventor who wishes patent protection in another country must apply for a patent in a specific country or in regional patent offices. Applicants may wish to consider the filing of an international application under the Patent Cooperation Treaty (PCT). An international (PCT) application generally has the same effect as a regular national patent application in each PCT-member country. The PCT process **simplifies** the filing of patent applications on the same invention in member countries, but **does not result** in a grant of "an international patent" and does not eliminate the need of applicants to file additional documents and fees in countries where patent protection is desired.

Almost every country has its own patent law, and a person desiring a patent in a particular country must make an application for patent in that country in accordance with its particular laws. Since the laws of many countries differ in various respects from the patent law of the United States, applicants are advised to seek guidance from specific foreign countries to ensure that patent rights are not lost prematurely.

Applicants also are advised that in the case of inventions made in the United States, the Director of the USPTO must issue a license before applicants can apply for a patent in a foreign country. The filing of a U.S. patent application serves as a request for a foreign filing license. The application's filing receipt contains further information and guidance as to the status of applicant's license for foreign filing.

Applicants may wish to consult the USPTO booklet, "General Information Concerning Patents" (specifically, the section entitled "Treaties and Foreign Patents") for more information on timeframes and deadlines for filing foreign patent applications. The guide is available either by contacting the USPTO Contact Center at 800-786-9199, or it can be viewed on the USPTO website at http://www.uspto.gov/web/offices/pac/doc/general/index.html.

For information on preventing theft of your intellectual property (patents, trademarks and copyrights), you may wish to consult the U.S. Government website, http://www.stopfakes.gov. Part of a Department of Commerce initiative, this website includes self-help "toolkits" giving innovators guidance on how to protect intellectual property in specific countries such as China, Korea and Mexico. For questions regarding patent enforcement issues, applicants may call the U.S. Government hotline at 1-866-999-HALT (1-866-999-4158).

LICENSE FOR FOREIGN FILING UNDER

Title 35, United States Code, Section 184

Title 37, Code of Federal Regulations, 5.11 & 5.15

GRANTED

The applicant has been granted a license under 35 U.S.C. 184, if the phrase "IF REQUIRED, FOREIGN FILING LICENSE GRANTED" followed by a date appears on this form. Such licenses are issued in all applications where

the conditions for issuance of a license have been met, regardless of whether or not a license may be required as set forth in 37 CFR 5.15. The scope and limitations of this license are set forth in 37 CFR 5.15(a) unless an earlier license has been issued under 37 CFR 5.15(b). The license is subject to revocation upon written notification. The date indicated is the effective date of the license, unless an earlier license of similar scope has been granted under 37 CFR 5.13 or 5.14.

This license is to be retained by the licensee and may be used at any time on or after the effective date thereof unless it is revoked. This license is automatically transferred to any related applications(s) filed under 37 CFR 1.53(d). This license is not retroactive.

The grant of a license does not in any way lessen the responsibility of a licensee for the security of the subject matter as imposed by any Government contract or the provisions of existing laws relating to espionage and the national security or the export of technical data. Licensees should apprise themselves of current regulations especially with respect to certain countries, of other agencies, particularly the Office of Defense Trade Controls, Department of State (with respect to Arms, Munitions and Implements of War (22 CFR 121-128)); the Bureau of Industry and Security, Department of Commerce (15 CFR parts 730-774); the Office of Foreign AssetsControl, Department of Treasury (31 CFR Parts 500+) and the Department of Energy.

NOT GRANTED

No license under 35 U.S.C. 184 has been granted at this time, if the phrase "IF REQUIRED, FOREIGN FILING LICENSE GRANTED" DOES NOT appear on this form. Applicant may still petition for a license under 37 CFR 5.12, if a license is desired before the expiration of 6 months from the filing date of the application. If 6 months has lapsed from the filing date of this application and the licensee has not received any indication of a secrecy order under 35 U.S.C. 181, the licensee may foreign file the application pursuant to 37 CFR 5.15(b).

UNITED STATES PATENT AND TRADEMARK OFFICE

Commissioner for Patents
United States Patent and Trademark Office
P.O. Box 1450
Alexandria, VA 22313-1450
www.uspto.gov

LEE, HONG, DEGERMAN, KANG & WAIMEY
660 S. FIGUEROA STREET
SUITE 2300
LOS ANGELES CA 90017

MAILED
SEP 02 2010
OFFICE OF PETITIONS

In re Application of	:	
Kijun Jim, et al.	:	
Application No. 12/470,446	:	DECISION GRANTING PETITION
Filed: May 21, 2009	:	UNDER 37 CFR 1.313(c)(2)
Attorney Docket No. 2101-3051C1C1	:	

This is a decision on the petition under 37 CFR 1.313(c)(2), filed August 31, 2010, to withdraw the above-identified application from issue after payment of the issue fee.

The petition is **GRANTED**.

The above-identified application is withdrawn from issue for consideration of a submission under 37 CFR 1.114 (request for continued examination). *See* 37 CFR 1.313(c)(2).

Petitioner is advised that the issue fee paid on July 22, 2010 cannot be refunded. If, however, this application is again allowed, petitioner may request that it be applied towards the issue fee required by the new Notice of Allowance.[1]

The petition is not signed by an attorney of record. Nevertheless, in accordance with 37 CFR 1.34, the signature of Mr. Rolando Gonzalez appearing on the correspondence shall constitute a representation to the United States Patent and Trademark Office that he is authorized to represent the particular party on whose behalf he acts. If Mr. Gonzalez desires to receive future correspondence regarding this file, the appropriate power of attorney documents must be submitted. A courtesy copy of this decision is being mailed to petitioner herein. However, until otherwise instructed, all future correspondence regarding this application file will be directed solely to the above-noted correspondence address of record.

Telephone inquiries regarding this decision should be directed to undersigned at (571) 272-1642. All other inquiries regarding the examination or status of this application should be directed to the Technology Center.

---

[1] *The request to apply the issue fee to the new Notice may be satisfied by completing and returning the new Part B – Fee(s) Transmittal Form (along with any balance due at the time of submission). Petitioner is advised that the Issue Fee Transmittal Form must be completed and timely submitted to avoid abandonment of the application.*

This application is being referred to Technology Center AU 2617 for processing of the request for continued examination under 37 CFR 1.114 and for consideration of the concurrently filed information disclosure statement.

/AMW
April M. Wise
Petitions Examiner
Office of Petitions

UNITED STATES PATENT AND TRADEMARK OFFICE

Commissioner for Patents
United States Patent and Trademark Office
P.O. Box 1450
Alexandria, VA 22313-1450
www.uspto.gov

Decision Date : October 26,2011

In re Application of :

Thomas Feldpausch

DECISION ON PETITION

UNDER CFR 1.313(c)(2)

Application No : 12470523

Filed : 22-May-2009

Attorney Docket No : STE001 P1287

This is an electronic decision on the petition under 37 CFR 1.313(c)(2), filed October 26,2011 , to withdraw the above-identified application from issue after payment of the issue fee.

The petition is **GRANTED.**

The above-identified application is withdrawn from issue for consideration of a submission under 37 CFR 1.114 (request for continued examination). See 37 CFR 1.313(c)(2).

Petitioner is advised that the issue fee paid in this application cannot be refunded. If, however, this application is again allowed, petitioner may request that it be applied towards the issue fee required by the new Notice of Allowance.

Telephone inquiries concerning this decision should be directed to the Patent Electronic Business Center (EBC) at 866-217-9197.

This application file is being referred to Technology Center AU 3634 for processing of the request for continuing examination under 37 CFR 1.114 .

Office of Petitions

Doc Code: PET.AUTO Document Description: Petition automatically granted by EFS-Web	PTO/SB/140 U.S. Patent and Trademark Office Department of Commerce

Electronic Petition Request	**PETITION TO WITHDRAW AN APPLICATION FROM ISSUE AFTER PAYMENT OF THE ISSUE FEE UNDER 37 CFR 1.313(c)**
Application Number	12470523
Filing Date	22-May-2009
First Named Inventor	Thomas Feldpausch
Art Unit	3634
Examiner Name	BLAIR JOHNSON
Attorney Docket Number	STE001 P1287
Title	PRIVACY SCREEN ASSEMBLY

An application may be withdrawn from issue for further action upon petition by the applicant. To request that the Office withdraw an application from issue, applicant must file a petition under this section including the fee set forth in § 1.17(h) and a showing of good and sufficient reasons why withdrawal of the application from issue is necessary.

APPLICANT HEREBY PETITIONS TO WITHDRAW THIS APPLICATION FROM ISSUE UNDER 37 CFR 1.313(c).

A grantable petition requires the following items:
(1) Petition fee; and
(2) One of the following reasons:
(a) Unpatentability of one or more claims, which must be accompanied by an unequivocal statement that one or more claims are unpatentable, an amendment to such claim or claims, and an explanation as to how the amendment causes such claim or claims to be patentable;
(b) Consideration of a request for continued examination in compliance with § 1.114 (for a utility or plant application only); or
(c) Express abandonment of the application. Such express abandonment may be in favor of a continuing application, but not a CPA under 37 CFR 1.53(d).

Petition Fee

☐ Applicant claims SMALL ENTITY status. See 37 CFR 1.27.

☐ Applicant is no longer claiming SMALL ENTITY status. See 37 CFR 1.27(g)(2).

☐ Applicant(s) status remains as SMALL ENTITY.

☒ Applicant(s) status remains as other than SMALL ENTITY

Reason for withdrawal from issue

○ One or more claims are unpatentable

◉ Consideration of a request for continued examination (RCE) (List of Required Documents and Fees)

○ Applicant hereby expressly abandons the instant application (any attorney/agent signing for this reason must have power of attorney pursuant to 37 CFR 1.32(b)).

RCE request,submission, and fee.

☐ I certify, in accordance with 37 CFR 1.4(d)(4) that : The RCE request ,submission, and fee have already been filed in the above-identified application on

☒ Are attached.

THIS PORTION MUST BE COMPLETED BY THE SIGNATORY OR SIGNATORIES

I certify, in accordance with 37 CFR 1.4(d)(4) that I am:

○ An attorney or agent registered to practice before the Patent and Trademark Office who has been given power of attorney in this application.

◉ An attorney or agent registered to practice before the Patent and Trademark Office, acting in a representative capacity.

○ A sole inventor

○ A joint inventor; I certify that I am authorized to sign this submission on behalf of all of the inventors

○ A joint inventor; all of whom are signing this e-petition

○ The assignee of record of the entire interest that has properly made itself of record pursuant to 37 CFR 3.71

Signature	/brianrcheslek/
Name	Brian R. Cheslek
Registration Number	58329

UNITED STATES PATENT AND TRADEMARK OFFICE

UNITED STATES DEPARTMENT OF COMMERCE
United States Patent and Trademark Office
Address: COMMISSIONER FOR PATENTS
P.O. Box 1450
Alexandria, Virginia 22313-1450
www.uspto.gov

APPLICATION NO.	FILING DATE	FIRST NAMED INVENTOR	ATTORNEY DOCKET NO.	CONFIRMATION NO.
12/470,526	05/22/2009	Goki TOSHIMA	TAM-7124	4057

7590 09/26/2011
MATTINGLY & MALUR, PC
1800 DIAGONAL ROAD
SUITE 370
ALEXANDRIA, VA 22314

EXAMINER
YANG, KWANG-SU

ART UNIT	PAPER NUMBER
2629	

MAIL DATE	DELIVERY MODE
09/26/2011	PAPER

DECISION GRANTING PETITION UNDER 37 CFR 1.138(d)

The declaration of express abandonment is recognized

This is in response to the petition under 37 CFR 1.138(d), requesting for a refund of any previously paid search fee and excess claims fee in the above-identified application.

The petition is granted.

The express abandonment is recognized. Any previously paid search fee and excess claims fee are hereby refunded.

Telephone inquiries should be directed to the Office of Data Management at (571) 272-4200.

Betty Powell

Patent Publication Branch
Office of Data Management

FORM PET651G (Rev. 08/07)

UNITED STATES PATENT AND TRADEMARK OFFICE

UNITED STATES DEPARTMENT OF COMMERCE
United States Patent and Trademark Office
Address: COMMISSIONER FOR PATENTS
P.O. Box 1450
Alexandria, Virginia 22313-1450
www.uspto.gov

APPLICATION NO.	FILING DATE	FIRST NAMED INVENTOR	ATTORNEY DOCKET NO.	CONFIRMATION NO.
12/470,588	05/22/2009	Greg McPHEETERS	REC0001-US	4172

74877 7590 08/06/2010
King and Spalding LLP
1700 Pennsylvania Ave, NW
Suite 200
Washington, DC 20006

EXAMINER
WUJCIAK, ALFRED J

ART UNIT	PAPER NUMBER
3632	

NOTIFICATION DATE	DELIVERY MODE
08/06/2010	ELECTRONIC

Please find below and/or attached an Office communication concerning this application or proceeding.

The time period for reply, if any, is set in the attached communication.

Notice of the Office communication was sent electronically on above-indicated "Notification Date" to the following e-mail address(es):

dbey@KSLaw.com
mblasik@kslaw.com
jpaolella-bald@kslaw.com

UNITED STATES PATENT AND TRADEMARK OFFICE

Commissioner for Patents
United States Patent and Trademark Office
P.O. Box 1450
Alexandria, VA 22313-1450
www.uspto.gov

AUG - 5 2010

King and Spalding LLP
1700 Pennsylvania Ave, NW
Suite 200
Washington DC 20006

In re Application of	:	
Greg MCPHEETERS	:	DECISION ON PETITION
Application No. 12/470,588	:	TO MAKE SPECIAL UNDER
Filed: May 22, 2009	:	THE GREEN TECHNOLOGY
Attorney Docket No. REC0001-US	:	PILOT PROGRAM

This is a decision on the petition under 37 CFR 1.102, filed July 28, 2010 to make the above-identified application special under the pilot program for applications pertaining to Green Technologies as set forth in 74 Federal Register Notice 64666 (December 8, 2009) and amended by 75 Federal Register Notice 28554 (May 21, 2010).

The petition is **DISMISSED**.

If reconsideration of this decision is desired, a petition for reconsideration must be filed within ONE (1) MONTH OR THIRTY (30) DAYS from the mail date of this decision, whichever is longer. No extension of this time limit can be granted under 37 CFR 1.136(a) or (b). The petition for reconsideration should include an exhaustive attempt to provide the lacking item(s) noted below, since, after a decision on the petition for reconsideration, no further reconsideration or review of the matter will be undertaken by the Director.

A grantable petition to make an application special under 37 CFR 1.102 and the pilot program as set forth in 74 FR 64666 must be directed to a nonprovisional application filed under 35 USC 111(a) or be a national stage entry under 35 USC 371, exclusive of any reissue applications and be filed prior to the date of the notice, December 8, 2009.

In order to qualify for special status, the following requirements must be met. 1) The application must have no more than 3 independent claims and no more than 20 total claims. 2) The application must not contain any multiple dependent claims. 3) The petition must state the basis for seeking special status, i.e., the claimed invention either: A) materially enhances the quality of the environment or B) materially contributes to: i) the discovery or development of renewable energy resources, ii) the more efficient utilization and conservation of energy resources, or iii) greenhouse gas emission reduction. 4) If the disclosure is not clear on its face that the claimed invention materially contributes under category (A) or (B), the petition must be accompanied by a statement by the applicant, assignee, or an attorney/agent registered to practice before the

Office explaining how the materiality standard is met. 5) A statement that applicant will agree to make an election without traverse in a telephonic interview if a restriction requirement is made by the examiner. 6) The petition to make special must be filed electronically. 7) The petition must be filed at least one day prior to the date that a first Office Action appears in the Patent Application Information Retrieval (PAIR) system. 8) The petition must be accompanied by a request for early publication in compliance with 37 CFR 1.219 and include the publication fee as set forth in 37 CFR 1.18(d).

The requirement for a fee for consideration of the petition to make special for applications pertaining to Green Technologies has been waived.

The petition lacks item(s) 4.

In regard to item 4, petitioner should note that the instant petition includes a statement identifying the basis for the special status as required by sections II and III of the notice. However, as stated in the notice, applicant must also provide a statement pertaining to the materiality standard if the application disclosure is not clear on its face as to the materiality of the basis for the special status of the invention. Petitioner asserts that "*the invention improves installation time and reliability of solar panels, as well as the efficiency thereof, at reduced cost which clearly incentivizes use of such solar panels and contributes to the efficient utilization of solar energy.*" This statement is merely a speculation on how the instant invention can be used to incentivize use solar panels or contributes to the efficient utilization of solar energy. As the clamp is merely a support structure which plays no part in the process of converting sunlight into electrical power or the utilization of solar energy/electrical power so it is unclear how a clamp can contribute to the utilization of solar energy. As stated in the notice, the materiality standard does not permit an applicant to speculate as to how a hypothetical end-user might specially apply the invention in a manner than could materially contribute to category (A) or (B). *Also see MPEP § 708.02 (VI).* Accordingly, it is not agreed that the application on its face meets the materiality standard.

Any reconsideration of this decision should be submitted through the USPTO electronic filing system, EFS-Web, and selecting the document description of "Petition for Green Tech Pilot" on the EFS-Web screen.

Telephone inquiries concerning this decision should be directed to Lanna Mai at 571-272-6867.

The application is being forwarded to the Technology Center Art Unit 3632 for action in its regular turn.

/Lanna Mai/

Lanna Mai
Quality Assurance Specialist
Technology Center 3600

Doc Code: M865 or FAI.REQ.INTV

PTOL-413A (08-10)
Approved for use through 07/31/2012. OMB 0651-0031
U.S. Patent and Trademark Office: U.S. DEPARTMENT OF COMMERCE

Applicant Initiated Interview Request Form

5 pages

Application No.: 12-470,599 First Named Applicant: Makowski
Examiner: Thompson, K Art Unit: 3643 Status of Application: Pending, F.R.

Tentative Participants:
(1) Attorney Molldrem (2) Examiner Thompson
(3) SPE Poon (4)

Proposed Date of Interview: 12-6-2011 **Proposed Time:** 10:15 AM **(AM/PM)**

Type of Interview Requested:
(1) [✓] Telephonic (2) [ ] Personal (3) [ ] Video Conference

Exhibit To Be Shown or Demonstrated: [ ] YES [✓] NO
If yes, provide brief description:

Issues To Be Discussed

Issues (Rej., Obj., etc)	Claims/ Fig. #s	Prior Art	Discussed	Agreed	Not Agreed
(1) 112			[ ]	[ ]	[ ]
(2) 103		Aanensen, Lindgren	[ ]	[ ]	[ ]
(3)			[ ]	[ ]	[ ]
(4)			[ ]	[ ]	[ ]

[ ] Continuation Sheet Attached [✓] Proposed Amendment or Arguments Attached

Brief Description of Arguments to be Presented: 112 issue is overcome by amending Claim 1 consistent with language in description. Combined references (each with omnidirectional emitter) lack directed light beam, and do not focus game fish's attention onto trailing lure.

An interview was conducted on the above-identified application on

NOTE: This form should be completed and filed by applicant in advance of the interview (see MPEP § 713.01). If this form is signed by a registered practitioner not of record, the Office will accept this as an indication that he or she is authorized to conduct an interview on behalf of the principal (37 CFR 1.32(a)(3)) pursuant to 37 CFR 1.34. This is not a power of attorney to any above named practitioner. See the Instruction Sheet for this form, which is incorporated by reference. By signing this form, applicant or practitioner is certifying that he or she has read the Instruction Sheet. After the interview is conducted, applicant is advised to file a statement of the substance of this interview (37 CFR 1.133(b)) as soon as possible. This application will not be delayed from issue because of applicant's failure to submit a written record of this interview.

/BMolldrem/
Applicant/Applicant's Representative Signature

Examiner/SPE Signature

Bernhard Molldrem
Typed/Printed Name of Applicant or Representative

28,973
Registration Number, if applicable

This collection of information is required by 37 CFR 1.133. The information is required to obtain or retain a benefit by the public which is to file (and by the USPTO to process) an application. Confidentiality is governed by 35 U.S.C. 122 and 37 CFR 1.11 and 1.14. This collection is estimated to take 24 minutes to complete, including gathering, preparing, and submitting the completed application form to the USPTO. Time will vary depending upon the individual case. Any comments on the amount of time you require to complete this form and/or suggestions for reducing this burden, should be sent to the Chief Information Officer, U.S. Patent and Trademark Office, U.S. Department of Commerce, P.O. Box 1450, Alexandria, VA 22313-1450. DO NOT SEND FEES OR COMPLETED FORMS TO THIS ADDRESS. SEND TO: Commissioner for Patents, P.O. Box 1450, Alexandria, VA 22313-1450.
If you need assistance in completing the form, call 1-800-PTO-9199 and select option 2.

12/470,599
Makowski

Claims currently presented (as corrected):

– 1. (Currently amended) In combination, a deepwater fishing rig for use in deep water, the rig including a downrigger wire extending vertically into the water, a downrigger weight carried at a lower end of the wire, a release device carried on said downrigger wire at a position above said downrigger weight; a fishing line carrying a fishing lure; wherein said release device holds said fish line in place at depth but allows said line to pull free of the release device when a fish strikes said lure; and a downrigger light attractor device connected onto said downrigger wire below said release device and above said downrigger weight; the downrigger light attractor device including

a body portion;

an attachment arrangement extending from opposite sides of said body portion to connect on an upper side to a portion of said wire going upwards to said release device and to connect at a lower side to a portion of said wire that extends downwards to said downrigger weight, said attachment arrangement defining a vertical axis for said lure light body portion;

a watertight chamber within said body portion, and extending in a direction radially rearward from said vertical axis, the watertight chamber including a lamp device disposed at a radially outward end of said chamber and *a lens disposed aft of said lamp device and concentrating a beam of light from said lamp device into a cone of light directed* in a *rearward* direction that is substantially at a right angle to said vertical axis, and means within the chamber providing electrical power to said lamp device, such that <u>the</u> light emanating from said lamp device shines ~~principally to rearward~~ <u>generally in the aft direction</u> to illuminate said lure to make the lure visible to fish, and wherein the downrigger light attractor device remains on the downrigger wire when the fishing line pulls free from the release device.

2. (Previously presented) The combination according to Claim 1, wherein said watertight chamber includes

battery chamber portion adapted to hold an electrical battery, the battery chamber having a threaded opening at a rearward end thereof; and

a sealed screw-in end cap containing said lamp device, wherein the end cap has a

threaded cylindrical member thereon with threads to mate with said threaded opening; electrical contacts positioned on said threaded cylindrical member to contact said battery electrically when the end cap is screwed into place; a transparent dome portion containing said lamp device; a flange member joining said cylindrical member and said dome portion; and a sealing member positioned between said flange member and the rearward end of said battery chamber portion to form a watertight seal when said end cap is screwed into place.

3. (Previously presented) The combination according to Claim 2 wherein said lamp device includes a white LED sealed within the dome portion of said end cap.

4. (Original) The combination according to Claim 2 wherein the body portion of said lure light includes a flat plate disposed in a vertical plane with said vertical axis passing therethrough, and wherein the battery chamber portion of said watertight chamber is formed unitarily with said flat plate.

5. (Original) The combination according to Claim 4 wherein said body portion includes a fish attractant chamber formed unitarily on said flat plate, including means for retaining a liquid fish attractant and dispersing the fish attractant into the water.

6. (Original) The combination according to Claim 4, wherein the flat plate of the body portion further includes a nose fin extending to a forward side of said vertical axis.

7. (Original) The combination according to Claim 1, wherein said lamp device provides black light illumination adapted for illuminating a phosphorescent lure.

8 to 12. (Withdrawn)

REMARKS

This communication is submitted for discussion purposes

Claims 1 to 7 remain pending in this application; Claims 8 to 12 have been withdrawn.

Claim 1 is proposed to be corrected to employ language found in the description at page 10, lines 25 - 26 in place of the language that the Examiner objected to as being "new matter." The meaning of that language, "generally in the aft direction" means the same thing as the previous language, "principally to rearward", and no new issues are involved here.

As for the rejection of Claim 1 based on Aanenson 7,137,222 combined with Lindgren 6,481,148: Aanenson concerns a downrigger with a sound, i.e. audible, emitter (35). Lindgren concerns an underwater battery powered light used in longline fishing. The Aanenson sound generator is omnidirectional and the Lindgren light device is also omnidirectional. The rejection based on these two references misses the point that the lure light of this invention is not omnidirectional, but rather concentrates the light in one direction, namely, towards the trailing lure. The Lindgren device has its LEDs 30 and 32 directed downward, i.e., into the cylindrical body, where there are dispersive elements that scatter the light in all directions. Applicant has attached as an exhibit hereto a modified drawing based on Aanenson's Fig. 1, in which the light device 10 of the Lindgren patent is substituted for the sound emitter 35 of Aanenson.

By contrast, the lure light device of the present invention employs a lens (i.e., in the dome of the screw-in end cap) that concentrates the light rearward, i.e., in the aft direction, so that it principally shines on the trailing lure. There is no such lens or equivalent device in either reference. See highlighted (*italic*) passage in Claim 1.

Moreover, the battery chamber, i.e., watertight chamber within the body portion is specifically recited as extending in a direction radially rearward from said vertical axis. The Aanenson and Lindgren devices are shown as extended *along* their axes, and neither fore nor aft.

The benefit of the present invention is that the lure light draws the game fish's attention to the trailing lure, whereas the lamp or sounder of the references draws the game fish's attention only to itself.

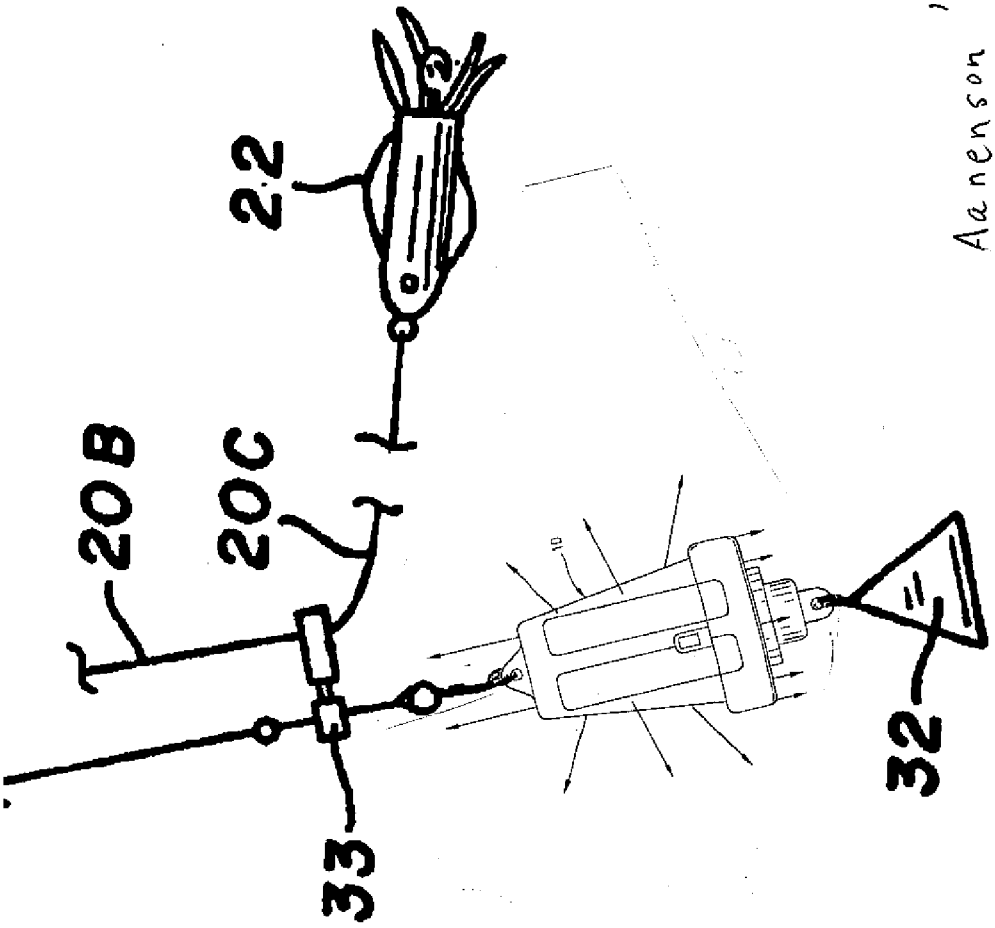

Aanenson '222 modified by Lindgren '148.

UNITED STATES PATENT AND TRADEMARK OFFICE

UNITED STATES DEPARTMENT OF COMMERCE
United States Patent and Trademark Office
Address: COMMISSIONER FOR PATENTS
P.O. Box 1450
Alexandria, Virginia 22313-1450
www.uspto.gov

APPLICATION NO.	FILING DATE	FIRST NAMED INVENTOR	ATTORNEY DOCKET NO.	CONFIRMATION NO.
12/470,602	05/22/2009	Kengo Kumano	011050.61642US	4203

23911 7590 08/03/2011
CROWELL & MORING LLP
INTELLECTUAL PROPERTY GROUP
P.O. BOX 14300
WASHINGTON, DC 20044-4300

EXAMINER
KWON, JOHN

ART UNIT	PAPER NUMBER
3747	

MAIL DATE	DELIVERY MODE
08/03/2011	PAPER

Please find below and/or attached an Office communication concerning this application or proceeding.

The time period for reply, if any, is set in the attached communication.

UNITED STATES PATENT AND TRADEMARK OFFICE

Commissioner for Patents
United States Patent and Trademark Office
P.O. Box 1450
Alexandria, VA 22313-1450
www.uspto.gov

CROWELL & MORING LLP
INTELLECTUAL PROPERTY GROUP
P.O. BOX 14300
WASHINGTON DC 20044-4300

In re Application of:
KUMANO, KENGO et al
Serial No.: 12/470,602
Filing Date: May 22, 2009
Docket: 011051.61642US
Title: CONTROL APPARATUS OF SPARK IGNITION INTERNAL COMBUSTION ENGINE

::
::
:
::

DECISION ON REQUEST TO PARTICIPATE IN PATENT PROSECUTION HIGHWAY (PPH) AND PETITION TO MAKE SPECIAL UNDER 37 CFR 1.102(a)

This is a decision on the request to participate in the Patent Prosecution Highway (PPH) program and the petition under 37 CFR 1.102(a), filed Aug. 2, 2011, to make the above-identified application special.

The request and petition are **granted**.

A grantable request to participate in the PPH program and petition to make special require:

(1) The U.S. application must validly claim priority under 35 U.S.C. 119(a) to one or more corresponding application(s) filed in the JPO or to a PCT application that does not contain any priority claim, or the U.S. application must be a national stage entry of a PCT application that does not contain any priority claim;
(2) Applicant must submit a copy of the allowable/patentable claim(s) from the JPO application(s) along with an English translation thereof and a statement that the English translation is accurate;
(3) All the claims in the U.S. application must sufficiently correspond or be amended to sufficiently correspond to the allowable/patentable claim(s) in the JPO application(s);
(4) Examination of the U.S. application has not begun;
(5) Applicant must submit a copy of all the office actions from each of the JPO application(s) containing the allowable/patentable claim(s) along with an English translation thereof and a statement that the English translation is accurate; and

(6) Applicant must submit an IDS listing the documents cited by the JPO examiner in the JPO office action along with copies of documents except U.S. patents or U.S. patent application publications.

In light of the petition being properly submitted, the request to participate in the PPH program and the petition comply with the above requirements. Accordingly, the above-identified application has been accorded "special" status.

The applicant is encouraged to cite and submit all relevant prior art references, if any, to facilitate examination in this application.

Other inquiries concerning the examination or status of the application should be directed to Steven Cronin, the SPE of Art Unit 3747 at 571-272-4536 for Class 701/105 and also accessible in the PAIR system at http://www.uspto.gov/ebc.index.html.

All other inquiries concerning the examination or status of the application should be directed to the Patent Application Information Retrieval (PAIR) system.

This application will be forwarded and docketed to an examiner for action on the merits commensurate with this decision.

Telephone inquiries concerning this decision should be directed to Henry C. Yuen, at 571-272-4856.

The petition is **granted.**

/Henry C. Yuen/

Henry C. Yuen, Special Programs Examiner
Technology Center 3700 – Mechanical Engineering,
Manufacturing and Products
571-272-4856

UNITED STATES PATENT AND TRADEMARK OFFICE

UNITED STATES DEPARTMENT OF COMMERCE
United States Patent and Trademark Office
Address: COMMISSIONER FOR PATENTS
P.O. Box 1450
Alexandria, Virginia 22313-1450
www.uspto.gov

APPLICATION NO.	FILING DATE	FIRST NAMED INVENTOR	ATTORNEY DOCKET NO.	CONFIRMATION NO.
12/470,672	05/22/2009	Akihito AKAI	TAM-7123	4347

7590 06/11/2011
MATTINGLY & MALUR, PC
1800 DIAGONAL ROAD
SUITE 370
ALEXANDRIA, VA 22314

EXAMINER
SHALWALA, BIPIN H

ART UNIT	PAPER NUMBER
2629	

MAIL DATE	DELIVERY MODE
06/11/2011	PAPER

DECISION GRANTING PETITION UNDER 37 CFR 1.138(d)

The declaration of express abandonment is recognized

This is in response to the petition under 37 CFR 1.138(d), requesting for a refund of any previously paid search fee and excess claims fee in the above-identified application.

The petition is granted.

The express abandonment is recognized. Any previously paid search fee and excess claims fee are hereby refunded.

Telephone inquiries should be directed to the Office of Data Management at (571) 272-4200.

Nioni Farmer

Patent Publication Branch
Office of Data Management

FORM PET651G (Rev. 08/07)

UNITED STATES PATENT AND TRADEMARK OFFICE

UNITED STATES DEPARTMENT OF COMMERCE
United States Patent and Trademark Office
Address: COMMISSIONER FOR PATENTS
P.O. Box 1450
Alexandria, Virginia 22313-1450
www.uspto.gov

APPLICATION NO.	FILING DATE	FIRST NAMED INVENTOR	ATTORNEY DOCKET NO.	CONFIRMATION NO.
12/470,679	05/22/2009	Junichi MINAMITAKA	09256/LH	4362

1933 7590 11/05/2010
HOLTZ, HOLTZ, GOODMAN & CHICK PC
220 Fifth Avenue
16TH Floor
NEW YORK, NY 10001-7708

EXAMINER

ART UNIT	PAPER NUMBER
2193	

MAIL DATE	DELIVERY MODE
11/05/2010	PAPER

Please find below and/or attached an Office communication concerning this application or proceeding.

The time period for reply, if any, is set in the attached communication.

UNITED STATES PATENT AND TRADEMARK OFFICE

Commissioner for Patents
United States Patent and Trademark Office
P.O. Box 1450
Alexandria, VA 22313-1450
www.uspto.gov

HOLTZ, HOLTZ, GOODMAN & CHICK PC
220 Fifth Avenue
16TH Floor
NEW YORK NY 10001-7708

In re Application of: **J. MIRAMITAKA**
Application No. 12/470,679
Docket: 09256/LH
Filed May 22, 2009
For: **FIR filter apparatus, audio apparatus and FIR filter program.**

DECISION ON REQUEST TO PARTICIPATE IN PATENT PROSECUTION HIGHWAY PROGRAM AND PETITION TO MAKE SPECIAL UNDER 37 CFR 1.102(a)

This is a decision on the request to participate in the Patent Prosecution Highway (PPH) program and the petition under 37 CFR 1.102(a), filed October 19, 2010 to make the above-identified application special.

The petition is **GRANTED.**

A grantable request to participate in the PPH program and petition to make special require:

(1) The U.S. application is
(a) a Paris Convention application which either
(i) validly claims priority under 35 U.S.C. 119(a) and 37 CFR 1.55 to one or more applications filed in the JPO, or
(ii) validly claims priority to a PCT application that contains no priority claims,

Or

(b) a national stage application under the PCT (an application which entered the national stage in the U.S. from a PCT international application after compliance with 35 U.S.C. 371), which PCT application
(i) validly claims priority to an application filed in the JPO, or
(ii) validly claims priority to a PCT application that contains no priority claims, or
(iii) contains no priority claim,

Or

(c) a so-called bypass application filed under 35 U.S.C. 111 (a) which validly claims benefit under 35 U.S.C. 120 to a PCT application, which PCT application
(i) validly claims priority to an application filed in the JPO, or

(ii) validly claims priority to a PCT application that contains no priority claims, or
(iii) contains no priority claim.

Where the JPO application that contains the allowable/patentable claims is not the same application for which priority is claimed in the U.S. application, applicant must identify the relationship between the JPO application that contains the allowable/patentable claims and the JPO priority application claimed in the U.S. application.

(2) Applicant must submit a copy of:

a. The allowable/patentable claim(s) from the JPO application(s) or if a copy of the allowable/patentable claims is available via the Dossier Access System (DAS) applicant may request the USPTO obtain a copy from the DAS, however if the USPTO is unable to obtain a copy from the DAS the applicant will be required to submit a copy;
b. An English translation of the allowable/patentable claim(s) and
c. A statement that the English translation is accurate;

Effective January 29, 2010, for a period of two years ending on January 28, 2012, the USPTO will accept claims written in dependent form in the U.S. application which are narrower in scope than the allowable/patentable claims in the Japanese application.

(3) Applicant must:

a. Ensure all the claims in the U.S. application must sufficiently correspond or be amended to sufficiently correspond to the allowable/patentable claim(s) in the JPO application(s) and
b. Submit a claims correspondence table in English;

(4) Examination of the U.S. application has not begun;

(5) Applicant must submit:

a. Documentation of prior office action:

i. a copy of the office action(s)just prior to the "Decision to Grant a Patent" from each of the JPO application(s) containing the allowable/patentable claim(s) or
ii. if the allowable/patentable claims(s) are from a "Notification of Reasons for Refusal" then the Notification of Reasons for Refusal or
iii. if the JPO application is a first action allowance then no office action from the JPO is necessary should be indicated on the request/petition form;

Further, if a copy of the documents from a above is available via the Dossier Access System (DAS) applicant may request the USPTO obtain a copy from the DAS, however if the USPTO is unable to obtain a copy from the DAS the applicant will be required to submit a copy;

b. An English language translation of the JPO Office action from (5)(a)(i)-(ii) above

c. A statement that the English translation is accurate;

Effective January 29, 2010, Applicants may submit a machine translation into the English language of the copy of the latest JPO office action just prior to the "Decision to Grant a Patent" (e.g., the latest "Notification of Reasons for Refusal") from each of the JPO application(s) containing the allowable/patentable claims that are the basis for the PPH request. The machine translation into the English language must be one that is provided by the JPO. That is, the machine translation into the English language cannot be one that is provided by a commercial service. Where a machine translation into the English language of the copy of the latest JPO office action (obtained from the JPO) is submitted, it will not be necessary to include a statement that the English translation is accurate.

(6) Applicant must submit:
   a. An IDS listing the documents cited by the JPO examiner in the JPO office action (unless already submitted in this application)
   b. Copies of the documents except U.S. patents or U.S. patent application publications (unless already submitted in this application);

The petition is **GRANTED.**

The request to participate in the PPH pilot program and petition are found to comply with the above requirements. Accordingly, the above-identified application has been accorded "special" status.

Telephone inquiries concerning this decision should be directed to Mano Padmanabhan at 571-272-4210.

All other inquiries concerning the examination or status of the application is accessible in the PAIR system at http://www.uspto.gov/ebc/index.html.

The application is being forwarded to the examiner for action on the merits commensurate with this decision.

/Mano Padmanabhan/

Mano Padmanabhan
Quality Assurance Specialist, Technology Center 2100, Workgroup 2180
571-272-4210

UNITED STATES PATENT AND TRADEMARK OFFICE

UNITED STATES DEPARTMENT OF COMMERCE
United States Patent and Trademark Office
Address: COMMISSIONER FOR PATENTS
P.O. Box 1450
Alexandria, Virginia 22313-1450
www.uspto.gov

APPLICATION NO.	FILING DATE	FIRST NAMED INVENTOR	ATTORNEY DOCKET NO.	CONFIRMATION NO.
12/470,682	05/22/2009	Greg McPHEETERS	REC0002-US	4372

74877 7590 08/06/2010
King and Spalding LLP
1700 Pennsylvania Ave, NW
Suite 200
Washington, DC 20006

EXAMINER
WOOD, KIMBERLY T

ART UNIT	PAPER NUMBER
3632	

NOTIFICATION DATE	DELIVERY MODE
08/06/2010	ELECTRONIC

Please find below and/or attached an Office communication concerning this application or proceeding.

The time period for reply, if any, is set in the attached communication.

Notice of the Office communication was sent electronically on above-indicated "Notification Date" to the following e-mail address(es):

dbey@KSLaw.com
mblasik@kslaw.com
jpaolella-bald@kslaw.com

UNITED STATES PATENT AND TRADEMARK OFFICE

Commissioner for Patents
United States Patent and Trademark Office
P.O. Box 1450
Alexandria, VA 22313-1450
www.uspto.gov

AUG - 5 2010

King and Spalding LLP
1700 Pennsylvania Ave, NW
Suite 200
Washington DC 20006

In re Application of	:	
Greg MCPHEETERS	:	DECISION ON PETITION
Application No. 12/470,682	:	TO MAKE SPECIAL UNDER
Filed: May 22, 2009	:	THE GREEN TECHNOLOGY
Attorney Docket No. REC0002-US	:	PILOT PROGRAM

This is a decision on the petition under 37 CFR 1.102, filed July 28, 2010 to make the above-identified application special under the pilot program for applications pertaining to Green Technologies as set forth in 74 Federal Register Notice 64666 (December 8, 2009) and amended by 75 Federal Register Notice 28554 (May 21, 2010).

The petition is **DISMISSED**.

If reconsideration of this decision is desired, a petition for reconsideration must be filed within ONE (1) MONTH OR THIRTY (30) DAYS from the mail date of this decision, whichever is longer. No extension of this time limit can be granted under 37 CFR 1.136(a) or (b). The petition for reconsideration should include an exhaustive attempt to provide the lacking item(s) noted below, since, after a decision on the petition for reconsideration, no further reconsideration or review of the matter will be undertaken by the Director.

A grantable petition to make an application special under 37 CFR 1.102 and the pilot program as set forth in 74 FR 64666 must be directed to a nonprovisional application filed under 35 USC 111(a) or be a national stage entry under 35 USC 371, exclusive of any reissue applications and be filed prior to the date of the notice, December 8, 2009.

In order to qualify for special status, the following requirements must be met. 1) The application must have no more than 3 independent claims and no more than 20 total claims. 2) The application must not contain any multiple dependent claims. 3) The petition must state the basis for seeking special status, i.e., the claimed invention either: A) materially enhances the quality of the environment or B) materially contributes to: i) the discovery or development of renewable energy resources, ii) the more efficient utilization and conservation of energy resources, or iii) greenhouse gas emission reduction. 4) If the disclosure is not clear on its face that the claimed invention materially contributes under category (A) or (B), the petition must be accompanied by a statement by the applicant, assignee, or an attorney/agent registered to practice before the

Office explaining how the materiality standard is met. 5) A statement that applicant will agree to make an election without traverse in a telephonic interview if a restriction requirement is made by the examiner. 6) The petition to make special must be filed electronically. 7) The petition must be filed at least one day prior to the date that a first Office Action appears in the Patent Application Information Retrieval (PAIR) system. 8) The petition must be accompanied by a request for early publication in compliance with 37 CFR 1.219 and include the publication fee as set forth in 37 CFR 1.18(d).

The requirement for a fee for consideration of the petition to make special for applications pertaining to Green Technologies has been waived.

The petition lacks item(s) 4.

In regard to item 4, petitioner should note that the instant petition includes a statement identifying the basis for the special status as required by sections II and III of the notice. However, as stated in the notice, applicant must also provide a statement pertaining to the materiality standard if the application disclosure is not clear on its face as to the materiality of the basis for the special status of the invention. Petitioner asserts that paragraphs [0008] and [0034] of the specification describes how the claimed clamp contributes to the more efficient utilization of solar energy. Paragraphs [0008] and [0034] are merely speculation on how the instant invention can contribute to the more efficient utilization of solar energy. As the clamp is a support structure which plays no part in the process of converting sunlight into electrical power or the utilization of solar energy/electrical power so it is unclear how a clamp can contribute to the utilization of solar energy. As stated in the notice, the materiality standard does not permit an applicant to speculate as to how a hypothetical end-user might specially apply the invention in a manner than could materially contribute to category (A) or (B). *Also see MPEP § 708.02 (VI).* Accordingly, it is not agreed that the application on its face meets the materiality standard.

Any reconsideration of this decision should be submitted through the USPTO electronic filing system, EFS-Web, and selecting the document description of "Petition for Green Tech Pilot" on the EFS-Web screen.

Telephone inquiries concerning this decision should be directed to Lanna Mai at 571-272-6867.

The application is being forwarded to the Technology Center Art Unit 3632 for action in its regular turn.

/Lanna Mai/

Lanna Mai
Quality Assurance Specialist
Technology Center 3600

UNITED STATES PATENT AND TRADEMARK OFFICE

UNITED STATES DEPARTMENT OF COMMERCE
United States Patent and Trademark Office
Address: COMMISSIONER FOR PATENTS
P.O. Box 1450
Alexandria, Virginia 22313-1450
www.uspto.gov

APPLICATION NO.	FILING DATE	FIRST NAMED INVENTOR	ATTORNEY DOCKET NO.	CONFIRMATION NO.
12/470,697	05/22/2009	Greg McPHEETERS	REC0003-US	4397

74877 7590 08/06/2010
King and Spalding LLP
1700 Pennsylvania Ave, NW
Suite 200
Washington, DC 20006

EXAMINER
CANFIELD, ROBERT

ART UNIT	PAPER NUMBER
3635	

NOTIFICATION DATE	DELIVERY MODE
08/06/2010	ELECTRONIC

Please find below and/or attached an Office communication concerning this application or proceeding.

The time period for reply, if any, is set in the attached communication.

Notice of the Office communication was sent electronically on above-indicated "Notification Date" to the following e-mail address(es):

dbey@KSLaw.com
mblasik@kslaw.com
jpaolella-bald@kslaw.com

UNITED STATES PATENT AND TRADEMARK OFFICE

Commissioner for Patents
United States Patent and Trademark Office
P.O. Box 1450
Alexandria, VA 22313-1450
www.uspto.gov

AUG - 5 2010

King and Spalding LLP
1700 Pennsylvania Ave, NW
Suite 200
Washington DC 20006

In re Application of	:	
Greg MCPHEETERS	:	DECISION ON PETITION
Application No. 12/470,697	:	TO MAKE SPECIAL UNDER
Filed: May 22, 2009	:	THE GREEN TECHNOLOGY
Attorney Docket No. REC0003-US	:	PILOT PROGRAM

This is a decision on the petition under 37 CFR 1.102, filed July 28, 2010 to make the above-identified application special under the pilot program for applications pertaining to Green Technologies as set forth in 74 Federal Register Notice 64666 (December 8, 2009) and amended by 75 Federal Register Notice 28554 (May 21, 2010).

The petition is **DISMISSED**.

If reconsideration of this decision is desired, a petition for reconsideration must be filed within ONE (1) MONTH OR THIRTY (30) DAYS from the mail date of this decision, whichever is longer. No extension of this time limit can be granted under 37 CFR 1.136(a) or (b). The petition for reconsideration should include an exhaustive attempt to provide the lacking item(s) noted below, since, after a decision on the petition for reconsideration, no further reconsideration or review of the matter will be undertaken by the Director.

A grantable petition to make an application special under 37 CFR 1.102 and the pilot program as set forth in 74 FR 64666 must be directed to a nonprovisional application filed under 35 USC 111(a) or be a national stage entry under 35 USC 371, exclusive of any reissue applications and be filed prior to the date of the notice, December 8, 2009.

In order to qualify for special status, the following requirements must be met. 1) The application must have no more than 3 independent claims and no more than 20 total claims. 2) The application must not contain any multiple dependent claims. 3) The petition must state the basis for seeking special status, i.e., the claimed invention either: A) materially enhances the quality of the environment or B) materially contributes to: i) the discovery or development of renewable energy resources, ii) the more efficient utilization and conservation of energy resources, or iii) greenhouse gas emission reduction. 4) If the disclosure is not clear on its face that the claimed invention materially contributes under category (A) or (B), the petition must be accompanied by a statement by the applicant, assignee, or an attorney/agent registered to practice before the

Office explaining how the materiality standard is met. 5) A statement that applicant will agree to make an election without traverse in a telephonic interview if a restriction requirement is made by the examiner. 6) The petition to make special must be filed electronically. 7) The petition must be filed at least one day prior to the date that a first Office Action appears in the Patent Application Information Retrieval (PAIR) system. 8) The petition must be accompanied by a request for early publication in compliance with 37 CFR 1.219 and include the publication fee as set forth in 37 CFR 1.18(d).

The requirement for a fee for consideration of the petition to make special for applications pertaining to Green Technologies has been waived.

The petition lacks item(s) 1 and 4.

In regard to item 1, petitioner should note that a review of the application claims has been made for the purposes of determining the number of claims contained therein. This application contains more than 3 independent claims; in fact there are 5 independent claims. As set forth in the Notice, if the application contains more than 3 independent claims or more than 20 total claims, it will not be eligible to participate in the "Pilot Program for Green Technologies Including Greenhouse Gas Reduction."

In regard to item 4, petitioner should note that the instant petition includes a statement identifying the basis for the special status as required by sections II and III of the notice. However, as stated in the notice, applicant must also provide a statement pertaining to the materiality standard if the application disclosure is not clear on its face as to the materiality of the basis for the special status of the invention. As the claimed fastener (a clamp or a nut) is a support structure which plays no part in the process of converting sunlight into electrical power or the utilization of solar energy/electrical power so it is unclear how a clamp can contribute to the utilization of solar energy. As stated in the notice, the materiality standard does not permit an applicant to speculate as to how a hypothetical end-user might specially apply the invention in a manner than could materially contribute to category (A) or (B). *Also see MPEP § 708.02 (VI).* Accordingly, it is not agreed that the application on its face meets the materiality standard.

Any reconsideration of this decision should be submitted through the USPTO electronic filing system, EFS-Web, and selecting the document description of "Petition for Green Tech Pilot" on the EFS-Web screen.

Telephone inquiries concerning this decision should be directed to Lanna Mai at 571-272-6867.

The application is being forwarded to the Technology Center Art Unit 3635 for action in its regular turn.

/Lanna Mai/

Lanna Mai
Quality Assurance Specialist
Technology Center 3600

UNITED STATES PATENT AND TRADEMARK OFFICE

Commissioner for Patents
United States Patent and Trademark Office
P.O. Box 1450
Alexandria, VA 22313-1450
www.uspto.gov

LEYDIG, VOIT & MAYER, LTD
(FOR HUAWEI TECHNOLOGIES CO., LTD)
TWO PRUDENTIAL PLAZA SUITE 4900
180 NORTH STETSON AVENUE
CHICAGO IL 60601

MAILED
APR 16 2012
OFFICE OF PETITIONS

In re Application of:	: DECISION ON REQUEST TO
Dongjun Wu	: PARTICIPATE IN THE PATENT
Application No. 12/470,769	: PROSECUTION HIGHWAY
Filed: May 22, 2009	: PROGRAM AND PETITION
Attorney Docket No. HW704928	: TO MAKE SPECIAL UNDER
	: 37 CFR 1.102(a)

This is a decision on the request to participate in the Patent Prosecution Highway (PPH) program and the petition under 37 CFR 1.102(a), filed February 9, 2012, to make the above-identified application special.

The request and petition are **DISMISSED**.

Discussion

A grantable request to participate in the PPH program and petition to make special require:

1. The U.S. application is

   a. a Paris Convention application which either
      i. validly claims priority under 35 U.S.C. 119(a) and 37 CFR 1.55 to one or more applications filed in the SIPO, or
      ii. validly claims priority under 35 U.S.C. 119(a)/365(a) to a PCT application that contains no priority claims,

   or

   b. a national stage application under the PCT (an application which entered the national stage in the U.S. from a PCT international application after compliance with 35 U.S.C. 371), which PCT application
      i. validly claims priority under 35 U.S.C. 365(b) to an application filed in the SIPO, or
      ii. validly claims priority under 35 U.S.C. 365(b) to a PCT application that contains no priority claims, or
      iii. contains no priority claim,

   or

c. a so-called bypass application filed under 35 U.S.C. 111(a) which validly claims benefit under 35 U.S.C. 120 to a PCT application, which PCT application
   i. validly claims priority under 35 U.S.C. 365(b) to an application filed in the SIPO, or
   ii. validly claims priority under 35 U.S.C. 365(b) to a PCT application that contains no priority claims, or
   iii. contains no priority claim;

2. Applicant must submit a copy of:
   a. The allowable/patentable claim(s) from the PCT application(s);
   b. An English translation of the allowable/patentable claim(s), and
   c. A statement that the English translation is accurate (if the claims were published in a language other than English);
3. Applicant must:
   a. Ensure that all the claims in the U.S. application must sufficiently correspond or be amended to sufficiently correspond to the allowable/patentable claim(s) in the PCT application(s), and
   b. Submit a claims correspondence table in English;
4. Examination of the U.S. application has not begun;
5. Applicant must submit:
   a. A copy of all the office actions (which are relevant to patentability), excluding "Decision to Grant a Patent" from each of the PCT application(s) containing the allowable/patentable claim(s);
   b. An English language translation of the SIPO office action; and
   c. A statement that the English translation is accurate (if the office actions are not in the English language);
6. Applicant must submit:
   a. An IDS listing the documents cited by the SIPO examiner in the SIPO office action (unless already filed in this application); and
   b. Copies of all the documents cited in the SIPO office action, except U.S. patents or U.S. patent application publications (unless already filed in this application);

This request to participate in the PPH program and petition is assessed as follows:

Conditions (1) and (4)-(6) above are considered to have been met. However, the request to participate in the PPH pilot program and petition does not appear to meet conditions (2)-(3).

Regarding the requirement of condition (2), applicant has failed to submit a properly identified copy of the allowed/patentable claim(s) from the PCT application(s) in the original foreign language, along with the required statement that the English translation is accurate. Further, petitioner has submitted what appears to be a set of foreign language claims and a set of English claims with no identifying application and or patent numbers.

Regarding the requirement of condition (3), without requirement (2) being met applicant has failed to ensure that all the claims in the U.S. application (currently amended February 9, 2012) sufficiently correspond to the allowable/patentable claims in the SIPO application. Further, according to the Claims Correspondence Table submitted by petitioner, US Claims 19 and 20 have no corresponding CN claims. Petitioner is reminded that all US claims must be the same as the Chinese allowed claims. Additionally, US claims 8,12,13,14 and 16 do not appear to correspond as set forth in the table.

Therefore, the current submissions do not meet the requirements to participate in the PPH program.

Applicant is given **ONE** opportunity within a time period of **ONE MONTH or THIRTY DAYS**, whichever is longer, from the mailing date of this decision to correct the deficiencies. **NO EXTENSION OF TIME UNDER 37 CFR 1.136 IS PERMITTED.** If the deficiencies are

not corrected with the time period given, the application will await action in its regular turn. Response must be filed via the Electronic Filing System (EFS) with the Document Description: Petition to make special under Patent Pros Hwy. Any preliminary amendments and IDS submitted with the PPH documents must be separately indexed as a preliminary amendment and IDS, respectively.

Telephone inquiries concerning this decision should be directed to Petitions Examiner Joan Olszewski at 571-272-7751.

All other inquiries concerning the examination or status of the application is accessible in the PAIR system at http://www.uspto.gov/ebc/index.html.

/dab/
David Bucci
Petitions Examiner
Office of Petitions

UNITED STATES PATENT AND TRADEMARK OFFICE

UNITED STATES DEPARTMENT OF COMMERCE
United States Patent and Trademark Office
Address: COMMISSIONER FOR PATENTS
P.O. Box 1450
Alexandria, Virginia 22313-1450
www.uspto.gov

APPLICATION NO.	FILING DATE	FIRST NAMED INVENTOR	ATTORNEY DOCKET NO.	CONFIRMATION NO.
12/470,787	05/22/2009	GEUN HO KIM	3449-1154PUS1	4566

2292 7590 08/20/2010
BIRCH STEWART KOLASCH & BIRCH
PO BOX 747
FALLS CHURCH, VA 22040-0747

EXAMINER

ART UNIT	PAPER NUMBER
2822	

NOTIFICATION DATE	DELIVERY MODE
08/20/2010	ELECTRONIC

Please find below and/or attached an Office communication concerning this application or proceeding.

The time period for reply, if any, is set in the attached communication.

Notice of the Office communication was sent electronically on above-indicated "Notification Date" to the following e-mail address(es):

mailroom@bskb.com

UNITED STATES PATENT AND TRADEMARK OFFICE

Commissioner for Patents
United States Patent and Trademark Office
P.O. Box 1450
Alexandria, VA 22313-1450
www.uspto.gov

BIRCH STEWART KOLASCH & BIRCH
PO BOX 747
FALLS CHURCH VA 22040-0747

In re Application of	**: DECISION ON REQUEST TO**
KIM et al.	**: PARTICIPATE IN THE PATENT**
Application No.: 12/470,787	**: PROSECUTION HIGHWAY**
Filed: 22 May 2009	**: PROGRAM AND PETITION**
Attorney Docket No.: 3449-1154PUS1	**: TO MAKE SPECIAL UNDER**
For: LIGHT EMITTING DEVICE PACKAGE	**: 37 CFR 1.102(d)**

This is a decision on the request to participate in the Patent Prosecution Highway (PPH) program and the petition under 37 CFR 1.102(d), filed 11 August 2010, to make the above-identified application special.

The request and petition are **GRANTED**.

Discussion

A grantable request to participate in the PPH program and petition to make special require:

1. The U.S. application is

    a. a Paris Convention application which either
        i. validly claims priority under 35 U.S.C. 119(a) and 37 CFR 1.55 to one or more applications filed in the KIPO, or
        ii. validly claims priority under 35 U.S.C. 119(a)/365(a) to a PCT application that contains no priority claims,

    or

    b. a national stage application under the PCT (an application which entered the national stage in the U.S. from a PCT international application after compliance with 35 U.S.C. 371), which PCT application
        i. validly claims priority under 35 U.S.C. 365(b) to an application filed in the KIPO, or
        ii. validly claims priority under 35 U.S.C. 365(b) to a PCT application that contains no priority claims, or
        iii. contains no priority claim,

    or

    c. a so-called bypass application filed under 35 U.S.C. 111(a) which validly claims benefit under 35 U.S.C. 120 to a PCT application, which PCT application

i. validly claims priority under 35 U.S.C. 365(b) to an application filed in the KIPO, or
ii. validly claims priority under 35 U.S.C. 365(b) to a PCT application that contains no priority claims, or
iii. contains no priority claim;

2. Applicant must submit a copy of:
   a. The allowable/patentable claim(s) from the KR application(s);
   b. An English translation of the allowable/patentable claim(s), and
   c. A statement that the English translation is accurate (if the claims were published in a language other than English);
3. Applicant must:
   a. Ensure that all the claims in the U.S. application must sufficiently correspond or be amended to sufficiently correspond to the allowable/patentable claim(s) in the KR application(s), and
   b. Submit a claims correspondence table in English;
4. Examination of the U.S. application has not begun;
5. Applicant must submit:
   a. A copy of all the office actions (which are relevant to patentability), excluding "Decision to Grant a Patent" from each of the KR application(s) containing the allowable/patentable claim(s);
   b. An English language translation of the KIPO office action; and
   c. A statement that the English translation is accurate (if the office actions are not in the English language);
6. Applicant must submit:
   a. An IDS listing the documents cited by the KIPO examiner in the KIPO office action (unless already filed in this application); and
   b. Copies of all the documents cited in the KIPO office action, except U.S. patents or U.S. patent application publications (unless already filed in this application);

The request to participate in the PPH program and petition comply with the above requirements. Accordingly, the above-identified application has been accorded "special" status.

Any response must be submitted via EFS-Web.

Telephone inquiries concerning this decision should be directed to Lee W. Young at 571-272-4549.

All other inquiries concerning the examination or status of the application is accessible in the PAIR system at http://uspto.gov/ebc/index.html.

Lee W. Young
TQAS
Technology Center 2800

UNITED STATES PATENT AND TRADEMARK OFFICE

Commissioner for Patents
United States Patent and Trademark Office
P.O. Box 1450
Alexandria, VA 22313-1450
www.uspto.gov

NICK A NICHOLS, JR.
P O BOX 16399
SUGAR LAND TX 77496-6399

MAILED
SEP 26 2011
OFFICE OF PETITIONS

In re Application of LEVERETTE et al. Application No. 12/470,839 Filed: 05/22/2009 Attorney Docket No. SEAH/519US-CIP2	: : : : :	DECISION ON PETITION

This is a decision on the petition under 37 CFR.1.181 filed September 21, 2011, to withdraw the holding of abandonment in the above-identified application.

The petition is **GRANTED**.

This application was held abandoned for failure to respond in a timely manner to the non-final Office action mailed January 6, 2011, which set a three-month shortened statutory period for reply. Extensions of this period were available under 37 CFR 1.136(a). On September 2, 2011, the Office mailed a Notice of Abandonment.

Petitioners indicate that they filed an amendment and a terminal disclaimer in response to the non-final Office action on May 19, 2011, and May 20, 2011. Petitioners assert that they submitted a request for an extension of time for response within the second month (and fee) on June 6, 2011. Petitioners aver that the response period was extended to June 6, 2011, and thus, the reply to the non-final Office action was filed timely. Petitioners request that the Office withdraw the holding of abandonment.

Petitioners' assertion is well-taken. The record reveals that petitioners filed an amendment and a terminal disclaimer (and fee) in response to the non-final Office action on May 19, 2011, and May 20, 2011, respectively, within the extendable period for response. The record further reveals that the Office received a request for an extension of time for response within the second month and a $490.00 extension of time fee on June 6, 2011. Accordingly, the reply is considered

timely filed by virtue of the request for an extension of time for response within the second month (and fee). See 37 CFR 1.6 and 1.136(a).

The petition under 37 CFR 1.181 is granted. The holding of abandonment is hereby withdrawn. The application is restored to pending status in view of the fact that petitioners filed a timely response to the non-final Office action.

This matter is being referred to Technology Center Art Unit 3617 for further action on the reply to the non-final Office action.

Telephone inquiries concerning this decision may be directed to the undersigned at (571) 272-3211. All other questions regarding the status of the application or the examination procedures should be directed to the Technology Center.

Christina Tartera Donnell

Christina Tartera Donnell
Senior Petitions Attorney
Office of Petitions

UNITED STATES PATENT AND TRADEMARK OFFICE

Commissioner for Patents
United States Patent and Trademark Office
P.O. Box 1450
Alexandria, VA 22313-1450
www.uspto.gov

FOLEY AND LARDNER LLP
SUITE 500
3000 K STREET NW
WASHINGTON DC 20007

MAILED

SEP 13 2010

OFFICE OF PETITIONS

In re Application of	:	
Bravo, Raul V. et al.	:	
Application No. 12/470,948	:	DECISION ON PETITION
Filed: May 22, 2009	:	TO WITHDRAW
Attorney Docket No. **052091-0107**	:	FROM RECORD
	:	

This is a decision on the Request to Withdraw as attorney or agent of record under 37 C.F.R. § 1.36(b), filed August 16, 2010.

The request is **NOT APPROVED**.

The Office has revised its change in procedure for request to withdraw from representation applies to requests filed on or after May 12, 2008.

A grantable request to withdraw as attorney/agent of record must be signed by every attorney/agent seeking to withdraw or contain a clear indication that one attorney is signing on behalf of another/others. The Office requires the practitioner(s) requesting withdrawal to certify that he, she, or they have: (1) given reasonable notice to the client, prior to the expiration of the response period, that the practitioner(s) intends to withdraw from employment; (2) delivered to the client or a duly authorized representative of the client all papers and property (including funds) to which the client is entitled; and (3) notified the client of any responses that may be due and the time frame within which the client must respond, pursuant 37 CFR 10.40(c).

The request cannot be approved because there is no indication that acts (1) thru (3) noted in the above-identified certifications have been performed. See PTO/SB/83 (11-08).

The Office will no longer accept address changes to a new practitioner or law firm filed with a Request, absent the filing of a power of attorney to the new representative. The Office will either change the correspondence address of record to the most current address information provided for the assignee of the entire interest who properly became of record under 37 CFR 3.71 or, if no assignee of the entire interest has properly been made of record under 37 CFR 3.71, the most current address information provided for the first named inventor.

Accordingly, the request to withdraw from record cannot be approved because the request to change the correspondence address is not that of: (1) the first named inventor; or (2) an assignee of the entire interest under 37 C.F.R 3.71 who has properly intervened.

If an assignee has intervened in this application, then an updated Statement under 37 CFR 3.73(b) or a copy of the actual assignment must be submitted with a renewed request.

All future communications from the Office will continue to be directed to the above-listed address until otherwise notified by applicant.

Telephone inquiries concerning this decision should be directed to Tredelle Jackson at 571-272-2783.

/Tredelle D. Jackson/
Paralegal Specialist
Office of Petitions

cc: **HYUNDAI-ROTEM COMPANY**
231 YANGAE-DONG, SEOCHO-GU
SEOUL, KOREA 137-938

UNITED STATES PATENT AND TRADEMARK OFFICE

UNITED STATES DEPARTMENT OF COMMERCE
United States Patent and Trademark Office
Address: COMMISSIONER FOR PATENTS
P.O. Box 1450
Alexandria, Virginia 22313-1450
www.uspto.gov

APPLICATION NO.	FILING DATE	FIRST NAMED INVENTOR	ATTORNEY DOCKET NO.	CONFIRMATION NO.
12/470,966	05/22/2009	Scott Sims	19723US02	4908

23446 7590 04/12/2012
MCANDREWS HELD & MALLOY, LTD
500 WEST MADISON STREET
SUITE 3400
CHICAGO, IL 60661

EXAMINER
COLEMAN, WILLIAM D

ART UNIT	PAPER NUMBER
2823	

NOTIFICATION DATE	DELIVERY MODE
04/12/2012	ELECTRONIC

Please find below and/or attached an Office communication concerning this application or proceeding.

The time period for reply, if any, is set in the attached communication.

Notice of the Office communication was sent electronically on above-indicated "Notification Date" to the following e-mail address(es):

mhmpto@mcandrews-ip.com

UNITED STATES PATENT AND TRADEMARK OFFICE

Commissioner for Patents
United States Patent and Trademark Office
P.O. Box 1450
Alexandria, VA 22313-1450
www.uspto.gov

MCANDREWS, HELD & MALLOY, LTD
500 WEST MADISON STREET
SUITE 3400
CHICAGO IL 60661

In re Application of Scott Sims Appl. No.: 12/470,966 Filed: May 22, 2009 Attorney's Docket No.: 19723US02 For: GAMING SYSTEM AND A METHOD OF GAMING	: : : : : : :	DECISION ON PETITION UNDER 37 C.F.R. § 1.59

This is a decision on the petition filed October 14, 2011, requesting that the Information Disclosure Statement (IDS) unintentionally submitted on July 13, 2009, be expunged from the application file record.

The petition is DENIED.

Petitioner requests that the Information Disclosure Statement (IDS), filed via EFS on July 13, 2009 (EFS ID No. 5299805), be expunged from the record because it was mistakenly filed in the instant application instead of another application.

The application was allowed and a Notice of Allowance was mailed on January 26, 2012.

It is noted that the application file does not contain an IDS with EFS ID No. 5299805 dated July 13, 2009. However, an IDS was filed on July 13, 2009 with EFS ID No. 5686502 including 7 pages of PTO form PTO/SB/08a. The references cited in this IDS were refused consideration by the examiner on July 14, 2011 because it did not comply with 37 CFR 1.98(a)(3).

Pursuant to M.P.E.P. § 724.05. III., "37 CFR 1.59(b) also covers the situation where an unintended heading has been placed on papers so that they are present in an incorrect application file. In such a situation, a petition should request that the papers be expunged ..... The grant of such a petition will be governed by the factors enumerated in paragraph II of this section in regard to the unintentional submission of information..."

Pursuant to M.P.E.P. § 724.05.II., information unintentionally submitted may be expunged from the file record provided that: (A) the Office can effect such return prior to the issuance of any patent on the application in issue; (B) it is stated that the information submitted was unintentionally submitted and the failure to obtain its return would cause irreparable harm to the party who submitted the information or to the party in interest on whose behalf the information

was submitted; (C) the information has not otherwise been made public; (D) there is a commitment on the part of the petitioner to retain such information for the period of any patent with regard to which such information is submitted; (E) it is established to the satisfaction of the Director that the information to be returned is not material information under 37 CFR 1.56; and (F) the petition fee as set forth in 37 CFR 1.17(g) is included.

The petition also does not satisfy conditions (B), (C) and (D) above for a grantable petition to expunge information unintentionally submitted in the application under M.P.E.P. § 724.05. III.

For the above-stated reasons, the petition to expunge is denied. The IDS filed July 13, 2009 will remain in the file record.

Any inquiry regarding this decision should be directed to Hien H. Phan, Quality Assurance Specialist, at (571) 272-1606.

Wynn Coggins, TC Director
Technology Center 2800
Semiconductors, Electrical and Optical
Systems and Components

UNITED STATES PATENT AND TRADEMARK OFFICE

Commissioner for Patents
United States Patent and Trademark Office
P.O. Box 1450
Alexandria, VA 22313-1450
www.uspto.gov

Feldman Gale, P.A.
1700 Market Street
Suite 3130
Philadelphia, PA 19103

MAILED

APR 11 2011

OFFICE OF PETITIONS

In re Application of	:	
Rao S. Bezwada	:	
Application No. 12/470,977	:	DECISION ON PETITION
Filed: May 22, 2009	:	TO WITHDRAW
Attorney Docket No. 1060.BEZW0011U	:	FROM RECORD
	:	

This is a decision on the Request to Withdraw as attorney or agent of record under 37 C.F.R. § 1.36(b), filed January 31, 2011.

The request is **moot because a revocation of power of attorney has been filed.**

A review of the file record indicates that the power of attorney to Feldman Gale, P.A., has been revoked by the assignee of the patent application on April 1, 2011. Accordingly, the request to withdraw under 37 C.F.R. § 1.36(b) is moot.

All future communications from the Office will continue to be directed to the below-listed address until otherwise notified by applicant.

Telephone inquires concerning this decision should be directed to Kimberly Inabinet at 571-272-4618.

/Kimberly Inabinet/

Kimberly Inabinet
Petitions Examiner
Office of Petitions

cc: Vance Intellectual Property, PC
5467 Hill Top Street
Crozet, VA 22932-3167

UNITED STATES PATENT AND TRADEMARK OFFICE

UNITED STATES DEPARTMENT OF COMMERCE
United States Patent and Trademark Office
Address: COMMISSIONER FOR PATENTS
P.O. Box 1450
Alexandria, Virginia 22313-1450
www.uspto.gov

APPLICATION NUMBER	FILING OR 371(C) DATE	FIRST NAMED APPLICANT	ATTY. DOCKET NO./TITLE
12/470,977	05/22/2009	Rao S. Bezwada	1060.BEZW0011U

CONFIRMATION NO. 4929

POWER OF ATTORNEY NOTICE

44338
FELDMAN GALE, P.A.
1700 Market Street
Suite 3130
Philadelphia, PA 19103

OC000000047002669

Date Mailed: 04/07/2011

NOTICE REGARDING CHANGE OF POWER OF ATTORNEY

This is in response to the Power of Attorney filed 04/01/2011.

- The Power of Attorney to you in this application has been revoked by the assignee who has intervened as provided by 37 CFR 3.71. Future correspondence will be mailed to the new address of record(37 CFR 1.33).

/kainabinet/

Office of Data Management, Application Assistance Unit (571) 272-4000, or (571) 272-4200, or 1-888-786-0101

UNITED STATES PATENT AND TRADEMARK OFFICE

Commissioner for Patents
United States Patent and Trademark Office
P.O. Box 1450
Alexandria, VA 22313-1450
www.uspto.gov

VANCE INTELLECTUAL PROPERTY, PC
5467 HILL TOP STREET
CROZET VA 22932-3167

MAILED
MAR 26 2012
OFFICE OF PETITIONS

In re Application of :
Rao S. Bezwada :
Application No. 12/470,977 :
Filed: May 22, 2009 :
Attorney Docket No. BEZ-011-US :

DECISION ON PETITION
TO MAKE SPECIAL UNDER
37 CFR 1.102(c)(1)

This is a decision on the petition under 37 CFR 1.102(c)(1), filed March 16, 2012, to make the above-identified application special based on applicant's age as set forth in M.P.E.P. § 708.02, Section IV.

The petition is **GRANTED**.

A grantable petition to make an application special under 37 CFR 1.102(c)(1) and MPEP § 708.02, Section IV: Applicant's Age must be accompanied by evidence showing that at least one of the applicants is 65 years of age, or more, such as a birth certificate or a statement by applicant. No fee is required

The instant petition includes a statement by an attorney on behalf of inventor Rao S. Bezwada, attesting to his/her age. The above-identified application has been accorded "special" status.

Telephone inquiries concerning this decision should be directed to Kimberly Inabinet at 571-272-4618.

All other inquiries concerning either the examination or status of the application should be directed to the Technology Center.

This application will be referred to Technology Center 1617 for action on the merits commensurate with this decision.

/Kimberly Inabinet/

Kimberly Inabinet
Petitions Examiner
Office of Petitions

UNITED STATES PATENT AND TRADEMARK OFFICE

UNITED STATES DEPARTMENT OF COMMERCE
United States Patent and Trademark Office
Address: COMMISSIONER FOR PATENTS
P.O. Box 1450
Alexandria, Virginia 22313-1450
www.uspto.gov

APPLICATION NO.	FILING DATE	FIRST NAMED INVENTOR	ATTORNEY DOCKET NO.	CONFIRMATION NO.
12/470,981	05/22/2009	Hiromu Kakuya	056204.61638US	4935

23911 7590 07/13/2011
CROWELL & MORING LLP
INTELLECTUAL PROPERTY GROUP
P.O. BOX 14300
WASHINGTON, DC 20044-4300

EXAMINER
VO, HIEU T

ART UNIT	PAPER NUMBER
3747	

MAIL DATE	DELIVERY MODE
07/13/2011	PAPER

Please find below and/or attached an Office communication concerning this application or proceeding.

The time period for reply, if any, is set in the attached communication.

UNITED STATES PATENT AND TRADEMARK OFFICE

Commissioner for Patents
United States Patent and Trademark Office
P.O. Box 1450
Alexandria, VA 22313-1450
www.uspto.gov

CROWELL & MORING LLP
INTELLECTUAL PROPERTY GROUP
P.O. BOX 14300
WASHINGTON DC 20044-4300

In re Application of: KAKUYA, HIROMU Serial No.: 12/470981 Filed: May 22, 2009 Attorney Docket No. : 056204.61638US Title: APPARATUS AND METHOD FOR CONTROLLING ENGINE	DECISION ON A REQUEST TO PARTICIPATE IN PATENT PROSECUTION HIGHWAY PROGRAM AND PETITION TO MAKE SPECIAL UNDER CFR 1.102(a)

This is a decision on the request to participate in the Patent Prosecution Highway (PPH) program and the petition under 37 CFR 1.102(a), filed July 8, 2011 to make the above-identified application special.

The request and petition are **granted**.

A grantable request to participate in the PPH pilot program and petition to make special require:

(1) The U.S. application must validly claim priority under 35 U.S.C. 119(a) to one or more corresponding application(s) filed in the JPO;
(2) Applicant must submit a copy of the allowable/patentable claim(s) from the JPO application(s) along with an English translation thereof and a statement that the English translation is accurate;
(3) All the claims in the U.S. application must sufficiently correspond or be amended to sufficiently correspond to the allowable/patentable claim(s) in the JPO application(s);
(4) Examination of the U.S. application has not begun;
(5) Applicant must submit a copy of all the office actions from each of the JPO application(s) containing the allowable/patentable claim(s) along with an English translation thereof and a statement that the English translation is accurate; and
(6) Applicant must submit IDS listing the documents cited by the JPO examiner in the JPO office action along with copies of documents except U.S. patents or U.S. patent application publications.

In light of the petition being properly submitted, the request to participate in the PPH program and the petition comply with the above requirements. Accordingly, the above-identified application has been accorded "special" status.

The applicant is encouraged to cite and submit all relevant prior art references, if any, to facilitate examination in this application.

Response must be filed via EFS-Web. Telephone inquiries concerning this decision should be directed to Henry C. Yuen, at 571-272-4856.

Petition is **granted**.

/Henry C. Yuen/

Henry C. Yuen
Special Programs Examiner
Technology Center 3700
Tel: 571-272-4856

UNITED STATES PATENT AND TRADEMARK OFFICE

Commissioner for Patents
United States Patent and Trademark Office
P.O. Box 1450
Alexandria, VA 22313-1450
www.uspto.gov

WPAT, PC
INTELLECTUAL PROPERTY ATTORNEYS
1100 Quail Street, Suite 202
Newport Beach CA 92660

MAILED
JAN 05 2012
OFFICE OF PETITIONS

In re Application of	:	
Cheok Yan Goh	:	
Application No. 12/471,002	:	NOTICE
Filed: May 22, 2009	:	
Attorney Docket No. 18506-295	:	

This is a notice regarding your request for acceptance of a fee deficiency submission under 37 CFR 1.28.

The Office no longer investigates or rejects original or reissue applications under 37 CFR 1.56. **1098 Off. Gaz. Pat. Office 502 (January 3, 1989)**. Therefore, nothing in this Notice is intended to imply that an investigation was done.

Your fee deficiency submission under 37 CFR 1.28 is hereby **ACCEPTED**.

This application is no longer entitled to small entity status. Accordingly, all future fees paid in this application must be paid at the large entity rate.

Inquiries related to this communication should be directed to the undersigned at (571) 272-2991.

/Terri Johnson/
Terri Johnson
Petitions Examiner
Office of Petitions

UNITED STATES PATENT AND TRADEMARK OFFICE

Commissioner for Patents
United States Patent and Trademark Office
P.O. Box 1450
Alexandria, VA 22313-1450
www.uspto.gov

The Starr Law Firm, LLC
Two Ravinia Ste 500
Atlanta GA 30346

MAILED
JUL 18 2011
OFFICE OF PETITIONS

In re Application of	:	
Quy That Ton	:	
Application No. 12/471,025	:	ON PETITION
Filed: May 22, 2005 E9063-00087	:	
Attorney Docket No.	:	

This is a decision on the petition under the unintentional provisions of 37 CFR 1.137(b), filed July 4, 2011, to revive the above-identified application.

The petition is **DISMISSED**.

Any request for reconsideration of this decision must be submitted within TWO (2) MONTHS from the mail date of this decision. Extensions of time under 37 CFR 1.136(a) are permitted. The reconsideration request should include a cover letter entitled "Renewed Petition under 37 CFR 1.137(b)." This is **not** a final agency action within the meaning of 5 U.S.C. § 704.

The application became abandoned for failure s to timely pay the issue and publication fees on or before June 14, 2011, as required by the Notice of Allowance and Fee(s) Due, mailed March 14, 2011, which set a statutory period for reply of three (3) months. Accordingly, the application became abandoned on June 15, 2011. The Notice of Abandonment was mailed June 27, 2011.

A grantable petition under 37 CFR 1.137(b) must be accompanied by: (1) the required reply, unless previously filed; (2) the petition fee as set forth in 37 CFR 1.17(m); (3) a statement that the entire delay in filing the required reply from the due date for the reply until the filing of a grantable petition pursuant to 37 CFR 1.137(b) was unintentional; and (4) any terminal disclaimer (and fee as set forth in 37 CFR 1.20(d)) required by 37 CFR 1.137(d). Where there is a question as to whether either the abandonment or the delay in filing a petition under 37 CFR 1.137 was unintentional, the Director may require additional information. See MPEP 711.03(c)(II)(C) and (D). The instant petition lacks item(s) (3).

The statement of unintentional delay cannot be accepted because the petition is not signed.

Further correspondence with respect to this matter should be addressed as follows:

By Mail: Mail Stop PETITION
Commissioner for Patents
P. O. Box 1450
Alexandria, VA 22313-1450

By hand: U. S. Patent and Trademark Office
Customer Service Window, Mail Stop Petitions
Randolph Building
401 Dulany Street
Alexandria, VA 22314

The centralized facsimile number is **(571) 273-8300.**

Telephone inquiries concerning this decision should be directed to the undersigned at (571) 272-2991.

/Terri Johnson/
Terri Johnson
Petitions Examiner
Office of Petitions

UNITED STATES PATENT AND TRADEMARK OFFICE

Commissioner for Patents
United States Patent and Trademark Office
P.O. Box 1450
Alexandria, VA 22313-1450
www.uspto.gov

Minh N. Nguyen, Esq.
Two Ravinia Ste 500
Atlanta GA 30346

MAILED
DEC 19 2011
OFFICE OF PETITIONS

In re Application of	:	
Quy That Ton	:	
Application No. 12/471,025	:	DECISION ON PETITION
Filed: May 22, 2009	:	
Attorney Docket No. E9063-00087	:	

This is a decision on the renewed petition under the unintentional provisions of 37 CFR 1.137(b), filed October 11, 2011, to revive the above-identified application.

The petition is **GRANTED**.

This application became abandoned for failure to timely pay the issue and publication fees on or before June 14, 2011, as required by the Notice of Allowance and Fee(s) Due, mailed March 14, 2011. Accordingly, the date of abandonment of this application is June 15, 2011.

The petition satisfies the requirements of 37 CFR 1.137(b) in that petitioner has supplied (1) the reply in the form of payment of the issue fee of $755 and the publication fee of $300, (2) the petition fee of $810; and (3) a proper statement of unintentional delay.

It is not apparent whether the person signing the statement of unintentional delay was in a position to have firsthand or direct knowledge of the facts and circumstances of the delay at issue. Nevertheless, such statement is being treated as having been made as the result of a reasonable inquiry into the facts and circumstances of such delay. See 37 CFR 10.18(b) and Changes to Patent Practice and Procedure; Final Rule Notice, 62 Fed. Reg. 53131, 53178 (October 10, 1997), 1203 Off. Gaz. Pat. Office 63, 103 (October 21, 1997). In the event that such an inquiry has not been made, petitioner must make such an inquiry. If such inquiry results in the discovery that it is not correct that the entire delay in filing the required reply from the due date for the reply until the filing of a grantable petition pursuant to 37 CFR 1.137(b) was unintentional, petitioner must notify the Office.

There is no indication that the person signing the petition was ever given a power of attorney to prosecute the application.

Telephone inquiries concerning this decision should be directed to Terri Johnson at (571) 272-2991.

This application is being referred to the Office of Data Management for processing into a patent.

/Terri Johnson/
Terri Johnson
Petitions Examiner
Office of Petitions

UNITED STATES PATENT AND TRADEMARK OFFICE

Commissioner for Patents
United States Patent and Trademark Office
P.O. Box 1450
Alexandria, VA 22313-1450
www.uspto.gov

MORRISON & FOERSTER LLP
1650 TYSONS BOULEVARD, SUITE 400
MCLEAN VA 22102

MAILED

DEC 20 2010

OFFICE OF PETITIONS

In re Application of :
Victor V. Gogolak :
Application No. 12/471,034 :
Filed: May 22, 2009 :
Attorney Docket No. **597932000701** :

DECISION ON PETITION
TO WITHDRAW
FROM RECORD

This is a decision on the Request to Withdraw as attorney or agent of record under 37 CFR § 1.36(b), filed December 14, 2010.

The request is **APPROVED**.

A grantable request to withdraw as attorney/agent of record must be signed by every attorney/agent seeking to withdraw or contain a clear indication that one attorney is signing on behalf of another/others. The Office requires the practitioner(s) requesting withdrawal to certify that he, she, or they have: (1) given reasonable notice to the client, prior to the expiration of the response period, that the practitioner(s) intends to withdraw from employment; (2) delivered to the client or a duly authorized representative of the client all papers and property (including funds) to which the client is entitled; and (3) notified the client of any responses that may be due and the time frame within which the client must respond , pursuant to 37 CFR 10.40.

The request was signed by Jonathan Bockman on behalf of all attorneys of record who are associated with Customer Number 25227.

All attorneys/agents associated with Customer Number 25227 have been withdrawn. Applicant is reminded that there is no attorney of record at this time.

The correspondence address of record has been changed and all future correspondence will be directed to the first named inventor Victor V. Gogolak at the address indicated below.

There is an outstanding Office action mailed August 13, 2010, that requires a reply from the applicant.

Telephone inquiries concerning this decision should be directed to the undersigned at 571-272-4584.

/JoAnne Burke/
JoAnne Burke
Petitions Examiner
Office of Petitions

cc: VICTOR V. GOGOLAK
11490 Commerce Park Drive, Suite 320
Reston, VA 20132

UNITED STATES PATENT AND TRADEMARK OFFICE

Commissioner for Patents
United States Patent and Trademark Office
P.O. Box 1450
Alexandria, VA 22313-1450
www.uspto.gov

MAILED
APR 06 2011
OFFICE OF PETITIONS

Retro Reflective Optics, LLC
5400 Trinity Road
Suite 303
Raleigh, NC 27607

In re Application of	:	
Wild, et al.	:	DECISION ON PETITION
Application No. 12/471,058	:	UNDER 37 CFR 1.183
Filed: May 22, 2009	:	
Attorney Docket No. B001-RED/US	:	

This is a decision on the petition under 37 CFR 1.183 seeking waiver of 37 CFR §§ 1.67 and 1.175, filed February 1, 2011, where it requires that a supplemental declaration be executed by the named inventors in a broadening reissue application. [1]

The petition is granted.

BACKGROUND

On May 22, 2009, the present application was filed as an application for reissue of U.S. Patent No. 6,603,134, by the assignee who executed an original reissue declaration on behalf of the now deceased joint inventors, Norman Wild and Paul Leavy, Jr.

During the prosecution of the present application, the Office required a supplemental declaration directed to errors in the original patent which were corrected in the present application after the signing of the original reissue declaration.

According to the declaration supplied by applicant's legal representative, Theodosios Thomas, together with the present petition, that joint inventors are deceased and have been so for over thirty years. Likewise, applicant states that their estates were closed many years ago. Further, Mr. Thomas states that under the laws of New Hampshire and Massachusetts, of which the inventors were residents, the estates are not eligible to be reopened.

[1] Once an application has received a fully executed oath or declaration that has been placed on the files for examination, the provisions of 37 CFR 1.47 no longer apply. Rather, the remedy for treating an inventor's refusal to also sign a supplemental oath or declaration is waiver of 37 CFR 1.67. See MPEP 603.

DECISION

35 U.S.C. 251, which is directed to reissue, does not address the signature requirements of a declaration in reissue. 37 CFR 1.172 requires that a reissue declaration be made (and signed) by the inventors, except as otherwise provided (§§ 1.42, 1.43, 1.47), where the scope of the claims of the original patent is being enlarged. 37 CFR 1.175(b)(1), requires that:

> "For any error corrected, which is not covered by the oath or declaration submitted under paragraph (a) of this section, applicant must submit a supplemental oath or declaration stating that every such error arose without any deceptive intention on the part of the applicant."

37 CFR 1.175(b)(1), taken in conjunction with 37 CFR 1.172, requires a supplemental declaration to be signed by all the inventors. This is because all oaths or declarations necessary to fulfill the rule requirements in a reissue application are taken together collectively as a single oath or declaration. Thus, each oath and/or declaration must bear the appropriate signature of all the inventors. *See In re Hayes*, 53 USPQ2d 1222 (Comm'r Pat. 1999).

37 CFR 1.183 permits, in an extraordinary situation, waiver of a rule which is not a requirement of the statute, where justice requires such waiver, and applicant has requested a waiver of the requirement that the 37 CFR 1.175(b)(1) supplemental declaration be signed by an inventor.

The instant petition is accompanied by an appropriate showing neither the joint inventors, or their legal representatives are available to execute the supplemental reissue declaration. Accordingly, the supplemental declaration of February 1, 20011, signed by an authorized representative of the assignee will be accepted as though it was signed by the joint inventors as required by 37 CFR 1.175(b)(1) taken in conjunction with 37 CFR 1.172. *See* MPEP 602.02. See *In re Hayes, supra.*

CONCLUSION

The present petition to waive 37 CFR 1.172 is granted.

The application is being forwarded to Technology Center Art Unit 2873 for further prosecution.

Please direct any questions related to this decision to the undersigned at (571) 272-3222.

/Kenya A. McLaughlin/

Kenya A. McLaughlin
Petitions Attorney
Office of Petitions

UNITED STATES PATENT AND TRADEMARK OFFICE

Commissioner for Patents
United States Patent and Trademark Office
P.O. Box 1450
Alexandria, VA 22313-1450
www.uspto.gov

Decision Date : July 15,2011

In re Application of :

Norman Wild

DECISION ON PETITION

UNDER CFR 1.313(c)(2)

Application No : 12471058

Filed : 22-May-2009

Attorney Docket No : B001-RED/US

This is an electronic decision on the petition under 37 CFR 1.313(c)(2), filed July 15,2011 , to withdraw the above-identified application from issue after payment of the issue fee.

The petition is **GRANTED.**

The above-identified application is withdrawn from issue for consideration of a submission under 37 CFR 1.114 (request for continued examination). See 37 CFR 1.313(c)(2).

Petitioner is advised that the issue fee paid in this application cannot be refunded. If, however, this application is again allowed, petitioner may request that it be applied towards the issue fee required by the new Notice of Allowance.

Telephone inquiries concerning this decision should be directed to the Patent Electronic Business Center (EBC) at 866-217-9197.

This application file is being referred to Technology Center AU 2873 for processing of the request for continuing examination under 37 CFR 1.114 .

Office of Petitions

Doc Code: PET.AUTO Document Description: Petition automatically granted by EFS-Web	PTO/SB/140 U.S. Patent and Trademark Office Department of Commerce

Electronic Petition Request	**PETITION TO WITHDRAW AN APPLICATION FROM ISSUE AFTER PAYMENT OF THE ISSUE FEE UNDER 37 CFR 1.313(c)**
Application Number	12471058
Filing Date	22-May-2009
First Named Inventor	Norman Wild
Art Unit	2873
Examiner Name	HUY MAI
Attorney Docket Number	B001-RED/US
Title	OPTICAL DETECTION SYSTEM

An application may be withdrawn from issue for further action upon petition by the applicant. To request that the Office withdraw an application from issue, applicant must file a petition under this section including the fee set forth in § 1.17(h) and a showing of good and sufficient reasons why withdrawal of the application from issue is necessary.

APPLICANT HEREBY PETITIONS TO WITHDRAW THIS APPLICATION FROM ISSUE UNDER 37 CFR 1.313(c).

A grantable petition requires the following items:
(1) Petition fee; and
(2) One of the following reasons:
(a) Unpatentability of one or more claims, which must be accompanied by an unequivocal statement that one or more claims are unpatentable, an amendment to such claim or claims, and an explanation as to how the amendment causes such claim or claims to be patentable;
(b) Consideration of a request for continued examination in compliance with § 1.114 (for a utility or plant application only); or
(c) Express abandonment of the application. Such express abandonment may be in favor of a continuing application, but not a CPA under 37 CFR 1.53(d).

Petition Fee

☐ Applicant claims SMALL ENTITY status. See 37 CFR 1.27.

☐ Applicant is no longer claiming SMALL ENTITY status. See 37 CFR 1.27(g)(2).

☐ Applicant(s) status remains as SMALL ENTITY.

☒ Applicant(s) status remains as other than SMALL ENTITY

Reason for withdrawal from issue

○ One or more claims are unpatentable

◉ Consideration of a request for continued examination (RCE) (List of Required Documents and Fees)

○ Applicant hereby expressly abandons the instant application (any attorney/agent signing for this reason must have power of attorney pursuant to 37 CFR 1.32(b)).

RCE request,submission, and fee.

☐ I certify, in accordance with 37 CFR 1.4(d)(4) that : The RCE request ,submission, and fee have already been filed in the above-identified application on

☒ Are attached.

THIS PORTION MUST BE COMPLETED BY THE SIGNATORY OR SIGNATORIES

I certify, in accordance with 37 CFR 1.4(d)(4) that I am:

◉ An attorney or agent registered to practice before the Patent and Trademark Office who has been given power of attorney in this application.

○ An attorney or agent registered to practice before the Patent and Trademark Office, acting in a representative capacity.

○ A sole inventor

○ A joint inventor; I certify that I am authorized to sign this submission on behalf of all of the inventors

○ A joint inventor; all of whom are signing this e-petition

○ The assignee of record of the entire interest that has properly made itself of record pursuant to 37 CFR 3.71

Signature	/Theodosios Thomas R45159/
Name	Theodosios Thomas
Registration Number	45159

UNITED STATES PATENT AND TRADEMARK OFFICE

UNITED STATES DEPARTMENT OF COMMERCE
United States Patent and Trademark Office
Address: COMMISSIONER FOR PATENTS
P.O. Box 1450
Alexandria, Virginia 22313-1450
www.uspto.gov

APPLICATION NO.	FILING DATE	FIRST NAMED INVENTOR	ATTORNEY DOCKET NO.	CONFIRMATION NO.
12/471,091	05/22/2009	Harry Chuang	2008-0231 / 24061.1038	5164

42717 7590 10/13/2011
HAYNES AND BOONE, LLP
IP Section
2323 Victory Avenue
Suite 700
Dallas, TX 75219

EXAMINER
JOY, JEREMY J

ART UNIT	PAPER NUMBER
2822	

MAIL DATE	DELIVERY MODE
10/13/2011	PAPER

Please find below and/or attached an Office communication concerning this application or proceeding.

The time period for reply, if any, is set in the attached communication.

UNITED STATES PATENT AND TRADEMARK OFFICE

Commissioner for Patents
United States Patent and Trademark Office
P.O. Box 1450
Alexandria, VA 22313-1450
www.uspto.gov

HAYNES AND BOONE, LLP
2323 Victory Avenue, Suite 700
Dallas, TX 75219

In re Application of:	:	
Harry Chuang	:	PETITION FOR CORRECTION OF
Serial No.: 12/471091	:	INVENTORSHIP
Filed: 22 May 2009	:	UNDER 37 CFR § 1.48(b)
Attorney Docket No.: 2008-0231/24061.1038	:	

This is a decision on the petition filed 18 Sept 2009 to correct inventorship under 37 CFR 1.48 (b).

The petition is GRANTED.

In view of the papers filed 18 Sept 2009 it has been found that in this non-provisional application, the prosecution resulted in the amendment or cancellation of claims so that fewer than all of the currently named inventors are actual inventors of the invention being claimed in the non-provisional application. The application has been corrected in compliance with 37 CFR 1.48 (b). The inventorship of this application has been changed by deleting the name:

Tzung-Chi Lee

The application will be forwarded to the Office of Initial Patent Examination (OIPE) for issuance of a corrected filing receipt, and correction of Office records to reflect the inventorship as corrected.

Zandra V. Smith/
Supervisory Patent Examiner,
Art Unit 2822

UNITED STATES PATENT AND TRADEMARK OFFICE

UNITED STATES DEPARTMENT OF COMMERCE
United States Patent and Trademark Office
Address: COMMISSIONER FOR PATENTS
P.O. Box 1450
Alexandria, Virginia 22313-1450
www.uspto.gov

APPLICATION NO.	FILING DATE	FIRST NAMED INVENTOR	ATTORNEY DOCKET NO.	CONFIRMATION NO.
12/471,091	05/22/2009	Harry Chuang	2008-0231 / 24061.1038	5164

42717 7590 12/15/2011
HAYNES AND BOONE, LLP
IP Section
2323 Victory Avenue
Suite 700
Dallas, TX 75219

EXAMINER
JOY, JEREMY J

ART UNIT	PAPER NUMBER
2822	

MAIL DATE	DELIVERY MODE
12/15/2011	PAPER

Please find below and/or attached an Office communication concerning this application or proceeding.

The time period for reply, if any, is set in the attached communication.

UNITED STATES PATENT AND TRADEMARK OFFICE

Commissioner for Patents
United States Patent and Trademark Office
P.O. Box 1450
Alexandria, VA 22313-1450
www.uspto.gov

HAYNES AND BOONE, LLP
2323 Victory Avenue, Suite 700
Dallas, TX 75219

In re Application of:	:	
Harry Chuang	:	PETITION FOR CORRECTION OF
Serial No.: 12/471091	:	INVENTORSHIP
Filed: 22 May 2009	:	UNDER 37 CFR § 1.48(b)
Attorney Docket No.: 2008-0231/24061.1038	:	

This is a decision on the petition filed 18 Sept 2009 to correct inventorship under 37 CFR 1.48 (b).

The petition is GRANTED.

In view of the papers filed 18 Sept 2009 it has been found that in this non-provisional application, the prosecution resulted in the amendment or cancellation of claims so that fewer than all of the currently named inventors are actual inventors of the invention being claimed in the non-provisional application. The application has been corrected in compliance with 37 CFR 1.48 (b). The inventorship of this application has been changed by adding the name:

Tzung-Chi Lee

The application will be forwarded to the Office of Initial Patent Examination (OIPE) for issuance of a corrected filing receipt, and correction of Office records to reflect the inventorship as corrected.

/Zandra V. Smith/
Supervisory Patent Examiner,
Art Unit 2822

UNITED STATES PATENT AND TRADEMARK OFFICE

UNITED STATES DEPARTMENT OF COMMERCE
United States Patent and Trademark Office
Address: COMMISSIONER FOR PATENTS
P.O. Box 1450
Alexandria, Virginia 22313-1450
www.uspto.gov

APPLICATION NO.	FILING DATE	FIRST NAMED INVENTOR	ATTORNEY DOCKET NO.	CONFIRMATION NO.
12/471,098	05/22/2009	Toshiya TAKAHASHI	Q113015	5184

7590 03/01/2011
SUGHRUE MION, PLLC
2100 PENNSYLVANIA AVENUE, N.W.
SUITE 800
WASHINGTON, DC 20037

EXAMINER
GAMBETTA, KELLY M

ART UNIT	PAPER NUMBER
1715	

NOTIFICATION DATE	DELIVERY MODE
03/01/2011	ELECTRONIC

DECISION GRANTING PETITION UNDER 37 CFR 1.138(d)

The declaration of express abandonment is recognized

This is in response to the petition under 37 CFR 1.138(d), requesting for a refund of any previously paid search fee and excess claims fee in the above-identified application.

The petition is granted.

The express abandonment is recognized. Any previously paid search fee and excess claims fee are hereby refunded.

Telephone inquiries should be directed to the Office of Data Management at (571) 272-4200.

Betty Powell

Patent Publication Branch
Office of Data Management

FORM PET651G (Rev. 08/07)

UNITED STATES PATENT AND TRADEMARK OFFICE

Commissioner for Patents
United States Patent and Trademark Office
P.O. Box 1450
Alexandria, VA 22313-1450
www.uspto.gov

MORRISS OBRYANT COMPAGNI, P.C.
734 EAST 200 SOUTH
SALT LAKE CITY UT 84102

MAILED

AUG 01 2011

OFFICE OF PETITIONS

In re Application of	:	
Alan Hepner et al.	:	
Application No. 12/471,103	:	DECISION ON PETITION
Filed: May 22, 2009	:	TO WITHDRAW
Attorney Docket No. 4293.HILL.NP	:	FROM RECORD
	:	

This is a decision on the Request to Withdraw as attorney or agent of record under 37 C.F.R. § 1.36(b), filed July 6, 2011.

The request is **APPROVED.**

A grantable request to withdraw as attorney/agent of record must be signed by every attorney/agent seeking to withdraw or contain a clear indication that one attorney is signing on behalf of another/others. A request to withdraw will not be approved unless at least 30 (thirty) days would remain between the date of approval and the later of the expiration date of a time to file a response or the expiration date of the maximum time period which can be extended under 37 C.F.R. § 1.136(a).

The request was signed by Frank W. Compagni, on behalf of all attorneys/agents associated with customer number 26986. All attorneys/agents associated with customer number 26986 have been withdrawn.

The correspondence address has been changed and is copied below.

Telephone inquiries concerning this decision should be directed to Kimberly Inabinet at 571-272-4618.

/Kimberly Inabinet/

Kimberly Inabinet
Petitions Examiner
Office of Petitions

cc: Hilltrac, Inc.
5440 Woodcrest Drive
Holladay, UT 84117

UNITED STATES PATENT AND TRADEMARK OFFICE

UNITED STATES DEPARTMENT OF COMMERCE
United States Patent and Trademark Office
Address: COMMISSIONER FOR PATENTS
P.O. Box 1450
Alexandria, Virginia 22313-1450
www.uspto.gov

APPLICATION NUMBER	FILING OR 371(C) DATE	FIRST NAMED APPLICANT	ATTY. DOCKET NO./TITLE
12/471,103	05/22/2009	Alan Hepner	4293.HILL.NP

CONFIRMATION NO. 5196

POWER OF ATTORNEY NOTICE

26986
MORRISS OBRYANT COMPAGNI, P.C.
734 EAST 200 SOUTH
SALT LAKE CITY, UT 84102

OC000000049030321

Date Mailed: 07/28/2011

NOTICE REGARDING CHANGE OF POWER OF ATTORNEY

This is in response to the Power of Attorney filed 07/06/2011.

- The withdrawal as attorney in this application has been accepted. Future correspondence will be mailed to the new address of record. 37 CFR 1.33.

/kainabinet/

Office of Data Management, Application Assistance Unit (571) 272-4000, or (571) 272-4200, or 1-888-786-0101

PTO/SB/20PCT-EP (05-10)
Approved for use through 01/31/2012. OMB 0651-0058
U.S. Patent and Trademark Office; U. S. DEPARTMENT OF COMMERCE
Under the Paperwork Reduction Act of 1995, no persons are required to respond to a collection of information unless it displays a valid OMB control number.

REQUEST FOR PARTICIPATION IN THE PATENT COOPERATION TREATY - PATENT PROSECUTION HIGHWAY (PCT-PPH) PILOT PROGRAM BETWEEN THE EUROPEAN PATENT OFFICE (EPO) AND THE USPTO

Application No:	12/471,151	Filing date:	05-22-2009
First Named Inventor:	Ryan W. Rindy		
Title of the Invention:	ANESTHETIC VAPORIZER FILLING SYSTEM		

THIS REQUEST FOR PARTICIPATION IN THE PCT-PPH PILOT PROGRAM ALONG WITH THE REQUIRED DOCUMENTS MUST BE SUBMITTED VIA EFS-WEB. INFORMATION REGARDING EFS-WEB IS AVAILABLE AT HTTP://WWW.USPTO.GOV/EBC/EFS_HELP.HTML

APPLICANT HEREBY REQUESTS PARTICIPATION IN THE PCT-PPH PROGRAM AND PETITIONS TO MAKE THE ABOVE-IDENTIFIED APPLICATION SPECIAL UNDER THE PCT-PPH PROGRAM.

The above-identified application is (1) a national stage entry of the corresponding PCT application, or (2) a national stage entry of another PCT application which claims priority to the corresponding PCT application, or (3) a national application that claims domestic/ foreign priority to the corresponding PCT application, or (4) a national application which forms the basis for the priority claim in the corresponding PCT application, or (5) a continuing application of a U.S. application that satisfies one of (1) to (4) above, or (6) a U.S. application that claims domestic benefit to a U.S. provisional application which forms the basis for the priority claim in the corresponding PCT application.

The corresponding PCT application number(s) is/are: PCT/US2010/028477

The international date of the corresponding PCT application(s) is/are: March 24, 2010

I. List of Required Documents:

a. **A copy of the latest international work product (WO/ISA, WO/IPEA, or IPER) in the above–identified corresponding PCT application(s)**

☑ Is attached

☐ Is not attached because the document is already in the U.S. application.

b. **A copy of all claims which were indicated as having novelty, inventive step and industrial applicability in the above-identified corresponding PCT application(s).**

☑ Is attached.

☐ Is not attached because the document is already in the U.S. application.

c. **English translations of the documents in a. and b. above are attached (if the documents are not in the English language). A statement that the English translation is accurate is attached for the document in b. above.**

This collection of information is required by 35 U.S.C. 119, 37 CFR 1.55, and 37 CFR 1.102(d). The information is required to obtain or retain a benefit by the public, which is to file (and by the USPTO to process) an application. Confidentiality is governed by 35 U.S.C. 122 and 37 CFR 1.11 and 1.14. This collection is estimated to take 2 hours to complete, including gathering, preparing, and submitting the completed application form to the USPTO. Time will vary depending upon the individual case. Any comments on the amount of time you require to complete this form and/or suggestions for reducing this burden should be sent to the Chief Information Officer, U.S. Patent and Trademark Office, U.S. Department of Commerce, P.O. Box 1450, Alexandria, VA 22313-1450. DO NOT SEND FEES OR COMPLETED FORMS TO THIS ADDRESS.

Approved for use through 01/31/2012. OMB 0651-0058
U.S.Patent and Trademark Office; U.S. DEPARTMENT OF COMMERCE
Under the Paperwork Reduction Act of 1995, no persons are required to respond to a collection of information unless it displays a valid OMB control number.

REQUEST FOR PARTICIPATION IN THE PCT-PPH PILOT PROGRAM BETWEEN THE EPO AND THE USPTO

(continued)

Application No.:	12/471,151
First Named Inventor:	Ryan W. Rindy

d. **(1) An information disclosure statement listing the documents cited in the international work products (ISR, WO/ISA, WO/IPEA, IPER) of the corresponding PCT application.**

☑ Is attached

☐ Has already been filed in the above-identified U.S. application on _____

(2) Copies of all documents (except) for U.S. patents or U.S. patent application publications)

☑ Are attached.

☐ Have already been filed in the above-identified U.S. application on _____

II. Claims Correspondence Table:

Claims in US Application	Patentable Claims in the corresponding PCT Application	Explanation regarding the correspondence
1-20	1-20	Claims 1 to 20 of the PCT/US2010/028477 correspond to US claims 1 to 20

III. All the claims in the US application sufficiently correspond to the patentable claims in the corresponding PCT application.

Signature /jet50352/	Date November 3, 2010
Name (Print/Typed) Jonathan E. Thomas	Registration Number 50,352

Privacy Act Statement

The **Privacy Act of 1974 (P.L. 93-579)** requires that you be given certain information in connection with your submission of the attached form related to a patent application or patent. Accordingly, pursuant to the requirements of the Act, please be advised that: (1) the general authority for the collection of this information is 35 U.S.C. 2(b)(2); (2) furnishing of the information solicited is voluntary; and (3) the principal purpose for which the information is used by the U.S. Patent and Trademark Office is to process and/or examine your submission related to a patent application or patent. If you do not furnish the requested information, the U.S. Patent and Trademark Office may not be able to process and/or examine your submission, which may result in termination of proceedings or abandonment of the application or expiration of the patent.

The information provided by you in this form will be subject to the following routine uses:

1. The information on this form will be treated confidentially to the extent allowed under the Freedom of Information Act (5 U.S.C. 552) and the Privacy Act (5 U.S.C 552a). Records from this system of records may be disclosed to the Department of Justice to determine whether disclosure of these records is required by the Freedom of Information Act.
2. A record from this system of records may be disclosed, as a routine use, in the course of presenting evidence to a court, magistrate, or administrative tribunal, including disclosures to opposing counsel in the course of settlement negotiations.
3. A record in this system of records may be disclosed, as a routine use, to a Member of Congress submitting a request involving an individual, to whom the record pertains, when the individual has requested assistance from the Member with respect to the subject matter of the record.
4. A record in this system of records may be disclosed, as a routine use, to a contractor of the Agency having need for the information in order to perform a contract. Recipients of information shall be required to comply with the requirements of the Privacy Act of 1974, as amended, pursuant to 5 U.S.C. 552a(m).
5. A record related to an International Application filed under the Patent Cooperation Treaty in this system of records may be disclosed, as a routine use, to the International Bureau of the World Intellectual Property Organization, pursuant to the Patent Cooperation Treaty.
6. A record in this system of records may be disclosed, as a routine use, to another federal agency for purposes of National Security review (35 U.S.C. 181) and for review pursuant to the Atomic Energy Act (42 U.S.C. 218(c)).
7. A record from this system of records may be disclosed, as a routine use, to the Administrator, General Services, or his/her designee, during an inspection of records conducted by GSA as part of that agency's responsibility to recommend improvements in records management practices and programs, under authority of 44 U.S.C. 2904 and 2906. Such disclosure shall be made in accordance with the GSA regulations governing inspection of records for this purpose, and any other relevant (*i.e.*, GSA or Commerce) directive. Such disclosure shall not be used to make determinations about individuals.
8. A record from this system of records may be disclosed, as a routine use, to the public after either publication of the application pursuant to 35 U.S.C. 122(b) or issuance of a patent pursuant to 35 U.S.C. 151. Further, a record may be disclosed, subject to the limitations of 37 CFR 1.14, as a routine use, to the public if the record was filed in an application which became abandoned or in which the proceedings were terminated and which application is referenced by either a published application, an application open to public inspection or an issued patent.
9. A record from this system of records may be disclosed, as a routine use, to a Federal, State, or local law enforcement agency, if the USPTO becomes aware of a violation or potential violation of law or regulation.

UNITED STATES PATENT AND TRADEMARK OFFICE

UNITED STATES DEPARTMENT OF COMMERCE
United States Patent and Trademark Office
Address: COMMISSIONER FOR PATENTS
P.O. Box 1450
Alexandria, Virginia 22313-1450
www.uspto.gov

APPLICATION NO.	FILING DATE	FIRST NAMED INVENTOR	ATTORNEY DOCKET NO.	CONFIRMATION NO.
12/471,151	05/22/2009	Ryan W. Rindy	238957 (5024-00423)	5291

73387 7590 11/04/2010
Andrus, Sceales, Starke & Sawall, LLP
100 East Wisconsin Avenue
Suite 1100
Milwaukee, WI 53202-4178

EXAMINER

ART UNIT	PAPER NUMBER
3771	

MAIL DATE	DELIVERY MODE
11/04/2010	PAPER

Please find below and/or attached an Office communication concerning this application or proceeding.

The time period for reply, if any, is set in the attached communication.

UNITED STATES PATENT AND TRADEMARK OFFICE

Commissioner for Patents
United States Patent and Trademark Office
P.O. Box 1450
Alexandria, VA 22313-1450
www.uspto.gov

Andrus, Sceales, Starke & Sawall, LLP
100 East Wisconsin Avenue
Suite 1100
Milwaukee WI 53202-4178

In re Application of	:
RINDY, RYAN W. et al	: DECISION ON REQUEST TO
Application No. 12/471,151	: PARTICIPATE IN PATENT
Filed: May 22, 2009	:PROSECUTION HIGHWAY
Attorney Docket No. 238957-(5024-00423)	: PILOT PROGRAM AND PETITION
For: ANESTHETIC VAPORIZER FILLING	: TO MAKE SPECIAL UNDER
SYSTEM	: 37 CFR 1.102(d)

This is a decision on the request to participate in the Patent Prosecution Highway (PPH) program and the petition under 37 CFR 1.102(d), filed November 3, 2010 to make the above-identified application special.

The request and petition are Dismissed.

A grantable request to participate in the PPH program and petition to make special require:
(1) The U.S. application must disclose an eligible relationship to one or more PCT applications filed in the JPO, EPO, KIPO or USPTO;
(2) Applicant must submit a copy of the allowable/patentable claim(s) from the PCT application(s) latest international work product (the written opinion or the IPER) along with an English translation thereof and a statement that the English translation is accurate;
(3) All the claims in the U.S. application must sufficiently correspond or be amended to sufficiently correspond to the allowable/patentable claim(s) in the PCT application(s);
(4) Examination of the U.S. application has not begun;
(5) Applicant must submit a copy of the latest international work product from the PCT application containing the allowable/patentable claim(s) along with an English translation thereof and a statement that the English translation is accurate; and
(6) Applicant must submit an IDS listing the documents cited by the PCT examiner in the international work product along with copies of documents except U.S. patents or U.S. patent application publications.

With regard to Item #6, the petition did not include a copy of the cited foreign patent, EP 0 909567 A2. Thus, Item #6 is not satisfied and for this reason the petition can not be granted.

Applicant is encouraged to cite and submit all relevant prior art references, if any, to facilitate examination in this application.

Applicant is given a time period of **ONE MONTH or THIRTY DAYS**, whichever is longer, from the mailing date of this decision to correct the deficiencies. **NO EXTENSION OF TIME UNDER 37 CFR 1.136 IS PERMITTED.** If the deficiencies are not corrected with the time period given, the application will await action in its regular turn. Response must be filed via EFS-Web. Currently, the application is undergoing entry of RCE papers and amendment processing.

Telephone inquiries concerning this decision should be directed to Henry C. Yuen at 571-272-4856.

Petition is **dismissed**.

/Henry C. Yuen/

Henry C. Yuen, Special Programs Examiner
Technology Center 3700 – Mechanical Engineering,
Manufacturing and Products
571-272-4856

PATENT

IN THE UNITED STATES PATENT AND TRADEMARK OFFICE

Application. No. :	12/471,151	
Applicant :	Ryan W. Rindy	
Filed :	05/22/2009	
Title :	Anesthetic Vaporizer Filling System	
TC/A.U. :	3771	
Examiner :		
Docket No. :	238957 (5024-00423)	
Confirmation No.	5291	

CERTIFICATE OF TRANSMISSION

I hereby certify that this correspondence is being electronically transmitted to the U.S. Patent and Trademark Office using EFS-Web on November 11, 2010.

Roni Haupt 11-11-2010

Roni Haupt Date

RESPONSE TO DECISION ON REQUEST TO PARTICIPATE IN PATENT PROSECUTION HIGHWAY PILOT PROGRAM

Commissioner of Patents
P.O. Box 1450
Alexandria, VA 22313-1450

Sir:

In the Decision mailed November 4, 2010, the Examiner indicated that the Petition filed by the Applicant for participation in the Patent Prosecution Highway (PPH) Program and the Petition under 37 CFR 1.102(d) were dismissed.

In the dismissal, the Examiner indicated that the Applicant failed to include a copy of foreign patent EP 0909567 A2 with the filing.

Filed along with this response is a copy of foreign patent EP 0909567 A2. Submission of this reference corrects the deficiencies of the original Petition. This response is being filed within one month from the mailing date of the Decision.

The Examiner is invited to contact the Applicant's undersigned attorney with any questions or comments, or to otherwise facilitate prosecution of the present application.

Respectfully submitted,

ANDRUS, SCEALES, STARKE & SAWALL, LLP

By: _____
Joseph D. Kuborn
Reg. No. 40,689

Andrus, Sceales, Starke & Sawall, LLP
100 East Wisconsin Avenue, St. 1100
Milwaukee, WI 53202
(414) 271-7590

UNITED STATES PATENT AND TRADEMARK OFFICE

UNITED STATES DEPARTMENT OF COMMERCE
United States Patent and Trademark Office
Address: COMMISSIONER FOR PATENTS
P.O. Box 1450
Alexandria, Virginia 22313-1450
www.uspto.gov

APPLICATION NO.	FILING DATE	FIRST NAMED INVENTOR	ATTORNEY DOCKET NO.	CONFIRMATION NO.
12/471,151	05/22/2009	Ryan W. Rindy	238957 (5024-00423)	5291

73387 7590 11/17/2010
Andrus, Sceales, Starke & Sawall, LLP
100 East Wisconsin Avenue
Suite 1100
Milwaukee, WI 53202-4178

EXAMINER

ART UNIT	PAPER NUMBER
3771	

MAIL DATE	DELIVERY MODE
11/17/2010	PAPER

Please find below and/or attached an Office communication concerning this application or proceeding.

The time period for reply, if any, is set in the attached communication.

UNITED STATES PATENT AND TRADEMARK OFFICE

Commissioner for Patents
United States Patent and Trademark Office
P.O. Box 1450
Alexandria, VA 22313-1450
www.uspto.gov

Andrus, Sceales, Starke & Sawall, LLP
100 East Wisconsin Avenue
Suite 1100
Milwaukee WI 53202-4178

In re Application of	:
RINDY, RYAN W. et al	: DECISION ON REQUEST TO
Application No. 12/471,151	: PARTICIPATE IN PATENT
Filed: May 22, 2009	:PROSECUTION HIGHWAY
Attorney Docket No. 238957-(5024-00423)	: PILOT PROGRAM AND PETITION
For: ANESTHETIC VAPORIZER FILLING	: TO MAKE SPECIAL UNDER
SYSTEM	: 37 CFR 1.102(d)

This is a decision on the renewed request to participate in the Patent Prosecution Highway (PPH) program and the petition under 37 CFR 1.102(d), filed November 11, 2010 to make the above-identified application special.

The request and petition are Granted.

A grantable request to participate in the PPH program and petition to make special require:
(1) The U.S. application must disclose an eligible relationship to one or more PCT applications filed in the JPO, EPO, KIPO or USPTO;
(2) Applicant must submit a copy of the allowable/patentable claim(s) from the PCT application(s) latest international work product (the written opinion or the IPER) along with an English translation thereof and a statement that the English translation is accurate;
(3) All the claims in the U.S. application must sufficiently correspond or be amended to sufficiently correspond to the allowable/patentable claim(s) in the PCT application(s);
(4) Examination of the U.S. application has not begun;
(5) Applicant must submit a copy of the latest international work product from the PCT application containing the allowable/patentable claim(s) along with an English translation thereof and a statement that the English translation is accurate; and
(6) Applicant must submit an IDS listing the documents cited by the PCT examiner in the international work product along with copies of documents except U.S. patents or U.S. patent application publications.

In light of the petition being properly submitted, the request to participate in the PPH program and the petition comply with the above requirements. Accordingly, the above-identified application has been accorded "special" status.

The applicant is encouraged to cite and submit all relevant prior art references, if any, to facilitate examination in this application.

All other inquiries concerning the examination or status of the application should be directed to Justine Yu, the SPE of Art Unit 3771, and (571)272-4835 for Class 128/203.120 and also accessible in the PAIR system at http://www.uspto.gov/ebc.index.html.

All other inquiries concerning the examination or status of the application should be directed to the Patent Application Information Retrieval (PAIR) system.

This application will be forwarded and docketed to an examiner for action on the merits commensurate with this decision.

Telephone inquiries concerning this decision should be directed to Henry C. Yuen, at 571-272-4856.

The petition is **granted.**

/Henry C. Yuen/

Henry C. Yuen, Special Programs Examiner
Technology Center 3700 – Mechanical Engineering,
Manufacturing and Products
571-272-4856

IN THE UNITED STATES PATENT AND TRADEMARK OFFICE

In re Application of: RINDY, Ryan W. et al.	)	**Exr: Henry C. YUEN**
	)	
Serial No.: 12/471,151	)	**Art Unit: 3771**
	)	
Filing Date: 05-22-2009	)	**Conf No. 5291**
	)	
	)	**Atty Docket No.: 238957**

Mail Stop Petition
Commissioner for Patents
P.O. Box 1450
Alexandria, VA 22313-1450

Request for Reconsideration

SIR:

This is response to the Decision on Petition, filed November 3, 2010, in the above-referenced application.

Applicant respectfully requests reconsideration of Applicant's Petition to Make Special under 37 CFR 1.102 (d) on the basis that Item #6 foreign patent, EP 0909567A2 which was not included has now been satisfied.

The undersigned attorney may be contacted at the number below to facilitate the resolution of any matters.

Respectfully submitted,

____/jet50352/_____
Jonathan E. Thomas
Reg. No. 50,352

Dated: November 22, 2010
General Electric Company
Global Patent Operation
2 Corporate Drive, Suite 648
Shelton, CT 06484
203-944-6747

UNITED STATES PATENT AND TRADEMARK OFFICE

UNITED STATES DEPARTMENT OF COMMERCE
United States Patent and Trademark Office
Address: COMMISSIONER FOR PATENTS
P.O. Box 1450
Alexandria, Virginia 22313-1450
www.uspto.gov

APPLICATION NO.	FILING DATE	FIRST NAMED INVENTOR	ATTORNEY DOCKET NO.	CONFIRMATION NO.
12/471,151	05/22/2009	Ryan W. Rindy	238957 (5024-00423)	5291

73387 7590 11/24/2010
Andrus, Sceales, Starke & Sawall, LLP
100 East Wisconsin Avenue
Suite 1100
Milwaukee, WI 53202-4178

EXAMINER
MAUST, TIMOTHY LEWIS

ART UNIT	PAPER NUMBER
3751	

MAIL DATE	DELIVERY MODE
11/24/2010	PAPER

Please find below and/or attached an Office communication concerning this application or proceeding.

The time period for reply, if any, is set in the attached communication.

UNITED STATES PATENT AND TRADEMARK OFFICE

Commissioner for Patents
United States Patent and Trademark Office
P.O. Box 1450
Alexandria, VA 22313-1450
www.uspto.gov

Andrus, Sceales, Starke & Sawall, LLP
100 East Wisconsin Avenue
Suite 1100
Milwaukee WI 53202-4178

In re Application of	:
RINDY, RYAN W. et al	: DECISION ON REQUEST TO
Application No. 12/471,151	: PARTICIPATE IN PATENT
Filed: May 22, 2009	:PROSECUTION HIGHWAY
Attorney Docket No. 238957-(5024-00423)	: PILOT PROGRAM AND PETITION
For: ANESTHETIC VAPORIZER FILLING	:TO MAKE SPECIAL UNDER
SYSTEM	: 37 CFR 1.102(d)

This is a decision on the renewed request to participate in the Patent Prosecution Highway (PPH) program and the petition under 37 CFR 1.102(d), filed November 23, 2010 to make the above-identified application special.

The request and petition are Granted.

A grantable request to participate in the PPH program and petition to make special require:
(1) The U.S. application must disclose an eligible relationship to one or more PCT applications filed in the JPO, EPO, KIPO or USPTO;
(2) Applicant must submit a copy of the allowable/patentable claim(s) from the PCT application(s) latest international work product (the written opinion or the IPER) along with an English translation thereof and a statement that the English translation is accurate;
(3) All the claims in the U.S. application must sufficiently correspond or be amended to sufficiently correspond to the allowable/patentable claim(s) in the PCT application(s);
(4) Examination of the U.S. application has not begun;
(5) Applicant must submit a copy of the latest international work product from the PCT application containing the allowable/patentable claim(s) along with an English translation thereof and a statement that the English translation is accurate; and
(6) Applicant must submit an IDS listing the documents cited by the PCT examiner in the international work product along with copies of documents except U.S. patents or U.S. patent application publications.

In light of the petition being properly submitted, the request to participate in the PPH program and the petition comply with the above requirements. Accordingly, the above-identified application has been accorded "special" status.

The applicant is encouraged to cite and submit all relevant prior art references, if any, to facilitate examination in this application.

All other inquiries concerning the examination or status of the application should be directed to Justine Yu, the SPE of Art Unit 3771, and (571)272-4835 for Class 128/203.120 and also accessible in the PAIR system at http://www.uspto.gov/ebc.index.html.

All other inquiries concerning the examination or status of the application should be directed to the Patent Application Information Retrieval (PAIR) system.

This application will be forwarded and docketed to an examiner for action on the merits commensurate with this decision.

Telephone inquiries concerning this decision should be directed to Henry C. Yuen, at 571-272-4856.

The petition is **granted.**

/Henry C. Yuen/

Henry C. Yuen, Special Programs Examiner
Technology Center 3700 – Mechanical Engineering,
Manufacturing and Products
571-272-4856

UNITED STATES PATENT AND TRADEMARK OFFICE

Commissioner for Patents
United States Patent and Trademark Office
P.O. Box 1450
Alexandria, VA 22313-1450
www.uspto.gov

FINNEGAN, HENDERSON, FARABOW,GARRETT & DUNNER LLP
601 New York Avenue, NW
Washington DC 2001-4413

MAILED

AUG 11 2011

OFFICE OF PETITIONS

Applicant: David James Balance, Nottingham (GB).
Appl. No.: 12/471,168
Filing Date: May 22, 2009
Title: Recombinant Fusion Proteins To Growth Harmone And Serum Albumin
Attorney Docket No.: 06832.0005-03000
Pub. No.:2010/0261650 A1
Pub. Date: Oct, 14, 2010

This is a decision on the requests for a corrected patent application publication under 37 CFR 1.221(b), received on December 13, 2010, for the above-identified application.

The request is granted-in-part.

37 CFR 1.221 (b) is applicable "only when the Office makes a material mistake which is apparent from Office records.... Any request for a corrected publication or revised patent application publication other than provided as provided in paragraph (a) of this section must be filed within two months from the date of the patent application publication. This period is not extendable." A material mistake must affect the public's ability to appreciate the technical disclosure of the patent application publication, to determine the scope of the patent application publication, or to determine the scope of the provisional rights that an applicant may seek to enforce upon issuance of a patent. [1]

The instant request is granted except for as set forth below:

The error noted by requestor with respect to the preliminary amendment to the specification is not an Office error. The patent application publication does not include a mistake regarding the failure to include the preliminary amendment to the specification because patent application publications are not required to include preliminary amendments. See 37 CFR 1.215(a). The "failure to include an amendment is not an Office error." See MPEP 1130(b). The publication accurately reflected the specification as filed.

The corrected patent application publication will be published in due course, unless the patent issues before the application is republished.

[1] Changes to Implement Eighteen-Month Publication of Patent Applications, 65 FR 57023, 57038 (Sept. 20, 2000), 1239, Off. Gaz. Pat. Office Notices 63, 75 (Oct. 10, 2000) (final rule).

It would greatly benefit the Office if **applicant did not provide copies of papers**, which were previously submitted and/or **a complete copy of the pre-grant publication**, as it unnecessarily increases the cost to the Office. See 37 CFR 1.4(b). A request for corrected publication need only point out what was printed incorrectly in the application, where the error occurs in the publication and where the correct text or drawing is found in the application papers. Marked up relevant copies of the applications papers and the pre-grant publication may facilitate processing of the request, where it is not readily apparent where the error occurs. If it is not clear why the error is a material error, further explanation may be warranted.

Inquiries relating to this matter may be directed to Mark Polutta at (571) 272-7709.

Mark Polutta
Senior Legal Advisor
Office of Patent Legal Administration
Office of the Deputy Commissioner
for Patent Examination Policy

UNITED STATES PATENT AND TRADEMARK OFFICE

Commissioner for Patents
United States Patent and Trademark Office
P.O. Box 1450
Alexandria, VA 22313-1450
www.uspto.gov

MARGER JOHNSON & MCCOLLOM/PARC
210 MORRISON STREET
SUITE 400
PORTLAND OR 97204

MAILED
FEB 08 2012
OFFICE OF PETITIONS

In re Application of :
CHUA et al. :
Application No. 12/471,188 :
Filed: 05/22/2009 :
Atty Docket No. 20081264-US-NP-9841-135 :

DECISION ON PETITION

This is a decision on the petition under 37 CFR 1.137(b), filed December 5, 2011, to revive the above-identified application.

The petition is **GRANTED**.

The application became abandoned for failure to reply in a timely manner to the non-final Office action, mailed June 2, 2011, which set a three-month shortened statutory period for reply. Petitioner did not submit a proper and timely request for an extension of time for response under the provisions of 37 CFR 1.136(a). Accordingly, the application became abandoned on September 3, 2011. A Notice of Abandonment was mailed on December 9, 2011.

The petition satisfies the requirements of 37 CFR 1.137(b) in that petitioner has supplied (1) the reply; (2) the petition fee; and (3) a proper statement of unintentional delay.

The Office notes that an extension of time under 37 CFR 1.136 must be filed prior to the expiration of the maximum extendable period for reply. See In re Application of S., 8 USPQ2d 1630, 1631 (Comm'r Pats. 1988). As the $1270.00 extension of time fee submitted with the petition on December 5, 2011, was filed after the maximum extendable period for reply, this fee is unnecessary and will be refunded.

This matter is being forwarded to Technology Center AU 2893.

Telephone inquiries concerning this matter may be directed to the undersigned at (571) 272-3211.

Christina Tartera Donnell

Christina Tartera Donnell
Senior Petitions Attorney
Office of Petitions

UNITED STATES PATENT AND TRADEMARK OFFICE

UNITED STATES DEPARTMENT OF COMMERCE
United States Patent and Trademark Office
Address: COMMISSIONER FOR PATENTS
P.O. Box 1450
Alexandria, Virginia 22313-1450
www.uspto.gov

APPLICATION NO.	FILING DATE	FIRST NAMED INVENTOR	ATTORNEY DOCKET NO.	CONFIRMATION NO.
12/471,204	05/22/2009	William H. Eby	1421-353	5415

32905 7590 06/09/2011
JONDLE & ASSOCIATES, P.C.
858 HAPPY CANYON ROAD, SUITE 230
CASTLE ROCK, CO 80108

EXAMINER
WORLEY, CATHY KINGDON

ART UNIT	PAPER NUMBER
1638	

NOTIFICATION DATE	DELIVERY MODE
06/09/2011	ELECTRONIC

Please find below and/or attached an Office communication concerning this application or proceeding.

The time period for reply, if any, is set in the attached communication.

Notice of the Office communication was sent electronically on above-indicated "Notification Date" to the following e-mail address(es):

JondleOA@jondlelaw.com

UNITED STATES PATENT AND TRADEMARK OFFICE

Commissioner for Patents
United States Patent and Trademark Office
P.O. Box 1450
Alexandria, VA 22313-1450
www.uspto.gov

JUN 0 9 2011

JONDLE & ASSOCIATES P.C.
858 HAPPY CANYON ROAD SUITE 230
CASTLE ROCK CO 80108

In re Application of:	:
William H. Eby	:
Serial No.: 12/471,204	: PETITION DECISION
Filed: May 22, 2009	:
Attorney Docket No.: **1421-353**	

This is in response to the petition under 37 CFR § 1.59(b), filed May 31, 2011, to expunge information from the above identified application. This application has not been allowed.

Petitioner requests that the Reply to Request for Information under 37 CFR 1.105, and attachment thereto, submitted to the Patent Office on May 31, 2011, be expunged from the record. Petitioner states either: (A) that the information contains trade secret material, proprietary material and/or material that is subject to a protective order which has not been made public; or (B) that the information submitted was unintentionally submitted and the failure to obtain its return would cause irreparable harm to the party who submitted the information or to the party in interest on whose behalf the information was submitted, and the information has not otherwise been made public. The petition fee set forth in 37 CFR § 1.17(g) has been paid.

This is an examined application which is currently under non-final rejection. As such the information provided has been reviewed, in part, but proceedings in the application have not been terminated. As stated in M.P.E.P. 724, upon allowance or other action closing prosecution in an application, petition may be made for return of Proprietary information. The information cannot be expunged at this time.

The petition is **DISMISSED**. Petitioner may resubmit the petition subsequent to a Notice of Allowability or *ex parte Quayle* action being mailed in the application. No additional petition fee will be required at that time.

Should there be any questions about this decision please contact Marianne C. Seidel by letter addressed to Director, TC 1600, at the address listed above, or by telephone at 571-272-0584 or by facsimile sent to the general Office facsimile number, 571-273-8300.

/MC Seidel/
Marianne C. Seidel, Quality Assurance Specialist
Technology Center 1600

UNITED STATES PATENT AND TRADEMARK OFFICE

UNITED STATES DEPARTMENT OF COMMERCE
United States Patent and Trademark Office
Address: COMMISSIONER FOR PATENTS
P.O. Box 1450
Alexandria, Virginia 22313-1450
www.uspto.gov

APPLICATION NO.	FILING DATE	FIRST NAMED INVENTOR	ATTORNEY DOCKET NO.	CONFIRMATION NO.
12/471,204	05/22/2009	William H. Eby	1421-353	5415

32905 7590 09/21/2011
JONDLE & ASSOCIATES, P.C.
858 HAPPY CANYON ROAD, SUITE 230
CASTLE ROCK, CO 80108

EXAMINER
WORLEY, CATHY KINGDON

ART UNIT	PAPER NUMBER
1638	

NOTIFICATION DATE	DELIVERY MODE
09/21/2011	ELECTRONIC

Please find below and/or attached an Office communication concerning this application or proceeding.

The time period for reply, if any, is set in the attached communication.

Notice of the Office communication was sent electronically on above-indicated "Notification Date" to the following e-mail address(es):

JondleOA@jondlelaw.com

UNITED STATES PATENT AND TRADEMARK OFFICE

Commissioner for Patents
United States Patent and Trademark Office
P.O. Box 1450
Alexandria, VA 22313-1450
www.uspto.gov

SEP 21 2011

JONDLE & ASSOCIATES P.C.
858 HAPPY CANYON ROAD SUITE 230
CASTLE ROCK CO 80108

In re Application of:	:
William H. Eby	: PETITION DECISION
Serial No.: 12/471,204	:
Filed: May 22, 2009	:
Attorney Docket No.: **1421-353**	

This is in response to the renewed petition under 37 CFR § 1.59(b), filed September 19, 2011, to expunge information from the above identified application. This application has been allowed.

Petitioner requests that the material submitted to the Patent Office on May 31, 2011 be expunged from the record. Petitioner states either: (A) that the information contains trade secret material, proprietary material and/or material that is subject to a protective order which has not been made public; or (B) that the information submitted was unintentionally submitted and the failure to obtain its return would cause irreparable harm to the party who submitted the information or to the party in interest on whose behalf the information was submitted, and the information has not otherwise been made public. The petition fee set forth in 37 CFR § 1.17(g) has been paid.

The reasons set forth in this petition establishes to the satisfaction of the Director that expungement of the information is appropriate. The file entry for this document has been closed and as such the document is no longer publicly available, which is the IFW equivalent to removal of a paper document from a paper file wrapper.

Therefore, petitioner's petition is GRANTED.

Should there be any questions about this decision please contact Marianne C. Seidel by letter addressed to Director, TC 1600, at the address listed above, or by telephone at 571-272-0584 or by facsimile sent to the general Office facsimile number, 571-273-8300.

/MC Seidel/
Marianne C. Seidel, Quality Assurance Specialist
Technology Center 1600

UNITED STATES PATENT AND TRADEMARK OFFICE

UNITED STATES DEPARTMENT OF COMMERCE
United States Patent and Trademark Office
Address: COMMISSIONER FOR PATENTS
P.O. Box 1450
Alexandria, Virginia 22313-1450
www.uspto.gov

APPLICATION NO.	FILING DATE	FIRST NAMED INVENTOR	ATTORNEY DOCKET NO.	CONFIRMATION NO.
12/471,222	05/22/2009	William H. Eby	1421-354	5463

32905 7590 06/03/2011
JONDLE & ASSOCIATES, P.C.
858 HAPPY CANYON ROAD, SUITE 230
CASTLE ROCK, CO 80108

EXAMINER
WORLEY, CATHY KINGDON

ART UNIT	PAPER NUMBER
1638	

NOTIFICATION DATE	DELIVERY MODE
06/03/2011	ELECTRONIC

Please find below and/or attached an Office communication concerning this application or proceeding.

The time period for reply, if any, is set in the attached communication.

Notice of the Office communication was sent electronically on above-indicated "Notification Date" to the following e-mail address(es):

JondleOA@jondlelaw.com

UNITED STATES PATENT AND TRADEMARK OFFICE

Commissioner for Patents
United States Patent and Trademark Office
P.O. Box 1450
Alexandria, VA 22313-1450
www.uspto.gov

JUN 0 3 2011

JONDLE & ASSOCIATES P.C.
858 HAPPY CANYON ROAD SUITE 230
CASTLE ROCK CO 80108

In re Application of:	:
William H. Eby	:
Serial No.: 12/471,222	: PETITION DECISION
Filed: May 22, 2009	:
Attorney Docket No.: **1421-354**	

This is in response to the petition under 37 CFR § 1.59(b), filed May 19, 2011, to expunge information from the above identified application. This application has not been allowed.

Petitioner requests that the Reply to Request for Information under 37 CFR 1.105, and attachment thereto, submitted to the Patent Office on May 19, 2011, be expunged from the record. Petitioner states either: (A) that the information contains trade secret material, proprietary material and/or material that is subject to a protective order which has not been made public; or (B) that the information submitted was unintentionally submitted and the failure to obtain its return would cause irreparable harm to the party who submitted the information or to the party in interest on whose behalf the information was submitted, and the information has not otherwise been made public. The petition fee set forth in 37 CFR § 1.17(g) has been paid.

This is an examined application which is currently under non-final rejection. As such the information provided has been reviewed, in part, but proceedings in the application have not been terminated. As stated in M.P.E.P. 724, upon allowance or other action closing prosecution in an application, petition may be made for return of Proprietary information. The information cannot be expunged at this time.

The petition is **DISMISSED**. Petitioner may resubmit the petition subsequent to a Notice of Allowability or *ex parte Quayle* action being mailed in the application. No additional petition fee will be required at that time.

Should there be any questions about this decision please contact Marianne C. Seidel by letter addressed to Director, TC 1600, at the address listed above, or by telephone at 571-272-0584 or by facsimile sent to the general Office facsimile number, 571-273-8300.

/MC Seidel/
Marianne C. Seidel, Quality Assurance Specialist
Technology Center 1600

UNITED STATES PATENT AND TRADEMARK OFFICE

UNITED STATES DEPARTMENT OF COMMERCE
United States Patent and Trademark Office
Address: COMMISSIONER FOR PATENTS
P.O. Box 1450
Alexandria, Virginia 22313-1450
www.uspto.gov

APPLICATION NO.	FILING DATE	FIRST NAMED INVENTOR	ATTORNEY DOCKET NO.	CONFIRMATION NO.
12/471,222	05/22/2009	William H. Eby	1421-354	5463

32905 7590 09/29/2011
JONDLE & ASSOCIATES, P.C.
858 HAPPY CANYON ROAD, SUITE 230
CASTLE ROCK, CO 80108

EXAMINER
WORLEY, CATHY KINGDON

ART UNIT	PAPER NUMBER
1638	

NOTIFICATION DATE	DELIVERY MODE
09/29/2011	ELECTRONIC

Please find below and/or attached an Office communication concerning this application or proceeding.

The time period for reply, if any, is set in the attached communication.

Notice of the Office communication was sent electronically on above-indicated "Notification Date" to the following e-mail address(es):

JondleOA@jondlelaw.com

UNITED STATES PATENT AND TRADEMARK OFFICE

Commissioner for Patents
United States Patent and Trademark Office
P.O. Box 1450
Alexandria, VA 22313-1450
www.uspto.gov

SEP 2 9 2011

JONDLE & ASSOCIATES P.C.
858 HAPPY CANYON ROAD SUITE 230
CASTLE ROCK CO 80108

In re Application of:	
William H. Eby	PETITION DECISION
Serial No.: 12/471,222	
Filed: May 22, 2009	
Attorney Docket No.: **1421-354**	

This is in response to the renewed petition under 37 CFR § 1.59(b), filed September 26, 2011, to expunge information from the above identified application. This application has been allowed.

Petitioner requests that the material submitted to the Patent Office on May 19, 2011 be expunged from the record. Petitioner states either: (A) that the information contains trade secret material, proprietary material and/or material that is subject to a protective order which has not been made public; or (B) that the information submitted was unintentionally submitted and the failure to obtain its return would cause irreparable harm to the party who submitted the information or to the party in interest on whose behalf the information was submitted, and the information has not otherwise been made public. The petition fee set forth in 37 CFR § 1.17(g) has been paid.

The reasons set forth in this petition establishes to the satisfaction of the Director that expungement of the information is appropriate. The file entry for this document has been closed and as such the document is no longer publicly available, which is the IFW equivalent to removal of a paper document from a paper file wrapper.

Therefore, petitioner's petition is GRANTED.

Should there be any questions about this decision please contact Marianne C. Seidel by letter addressed to Director, TC 1600, at the address listed above, or by telephone at 571-272-0584 or by facsimile sent to the general Office facsimile number, 571-273-8300.

/MC Seidel/
Marianne C. Seidel, Quality Assurance Specialist
Technology Center 1600

UNITED STATES PATENT AND TRADEMARK OFFICE

UNITED STATES DEPARTMENT OF COMMERCE
United States Patent and Trademark Office
Address: COMMISSIONER FOR PATENTS
P.O. Box 1450
Alexandria, Virginia 22313-1450
www.uspto.gov

APPLICATION NO.	FILING DATE	FIRST NAMED INVENTOR	ATTORNEY DOCKET NO.	CONFIRMATION NO.
12/471,228	05/22/2009	William H. Eby	1421-370	5479

32905 7590 05/27/2011
JONDLE & ASSOCIATES, P.C.
858 HAPPY CANYON ROAD, SUITE 230
CASTLE ROCK, CO 80108

EXAMINER
WORLEY, CATHY KINGDON

ART UNIT	PAPER NUMBER
1638	

NOTIFICATION DATE	DELIVERY MODE
05/27/2011	ELECTRONIC

Please find below and/or attached an Office communication concerning this application or proceeding.

The time period for reply, if any, is set in the attached communication.

Notice of the Office communication was sent electronically on above-indicated "Notification Date" to the following e-mail address(es):

JondleOA@jondlelaw.com

UNITED STATES PATENT AND TRADEMARK OFFICE

Commissioner for Patents
United States Patent and Trademark Office
P.O. Box 1450
Alexandria, VA 22313-1450
www.uspto.gov

MAY 2 7 2011

JONDLE & ASSOCIATES P.C.
858 HAPPY CANYON ROAD SUITE 230
CASTLE ROCK CO 80108

In re Application of:	:
William H. Eby	:
Serial No.: 12/471,228	: PETITION DECISION
Filed: May 22, 2009	:
Attorney Docket No.: **1421-370**	

This is in response to the petition under 37 CFR § 1.59(b), filed May 13, 2011, to expunge information from the above identified application. This application has not been allowed.

Petitioner requests that the Reply to Request for Information under 37 CFR 1.105, and attachment thereto, submitted to the Patent Office on May 13, 2011, be expunged from the record. Petitioner states either: (A) that the information contains trade secret material, proprietary material and/or material that is subject to a protective order which has not been made public; or (B) that the information submitted was unintentionally submitted and the failure to obtain its return would cause irreparable harm to the party who submitted the information or to the party in interest on whose behalf the information was submitted, and the information has not otherwise been made public. The petition fee set forth in 37 CFR § 1.17(g) has been paid.

This is an examined application which is currently under non-final rejection. As such the information provided has been reviewed, in part, but proceedings in the application have not been terminated. As stated in M.P.E.P. 724, upon allowance or other action closing prosecution in an application, petition may be made for return of Proprietary information. The information cannot be expunged at this time.

The petition is **DISMISSED**. Petitioner may resubmit the petition subsequent to a Notice of Allowability or *ex parte Quayle* action being mailed in the application. No additional petition fee will be required at that time.

Should there be any questions about this decision please contact Marianne C. Seidel by letter addressed to Director, TC 1600, at the address listed above, or by telephone at 571-272-0584 or by facsimile sent to the general Office facsimile number, 571-273-8300.

/MC Seidel/
Marianne C. Seidel, Quality Assurance Specialist
Technology Center 1600

UNITED STATES PATENT AND TRADEMARK OFFICE

UNITED STATES DEPARTMENT OF COMMERCE
United States Patent and Trademark Office
Address: COMMISSIONER FOR PATENTS
P.O. Box 1450
Alexandria, Virginia 22313-1450
www.uspto.gov

APPLICATION NO.	FILING DATE	FIRST NAMED INVENTOR	ATTORNEY DOCKET NO.	CONFIRMATION NO.
12/471,228	05/22/2009	William H. Eby	1421-370	5479

32905 7590 09/12/2011
JONDLE & ASSOCIATES, P.C.
858 HAPPY CANYON ROAD, SUITE 230
CASTLE ROCK, CO 80108

EXAMINER
WORLEY, CATHY KINGDON

ART UNIT	PAPER NUMBER
1638	

NOTIFICATION DATE	DELIVERY MODE
09/12/2011	ELECTRONIC

Please find below and/or attached an Office communication concerning this application or proceeding.

The time period for reply, if any, is set in the attached communication.

Notice of the Office communication was sent electronically on above-indicated "Notification Date" to the following e-mail address(es):

JondleOA@jondlelaw.com

UNITED STATES PATENT AND TRADEMARK OFFICE

SEP 1 2 2011

Commissioner for Patents
United States Patent and Trademark Office
P.O. Box 1450
Alexandria, VA 22313-1450
www.uspto.gov

JONDLE & ASSOCIATES P.C.
858 HAPPY CANYON ROAD SUITE 230
CASTLE ROCK CO 80108

In re Application of:	:
William H. Eby	: PETITION DECISION
Serial No.: 12/471,228	:
Filed: May 22, 2009	:
Attorney Docket No.: **1421-370**	

This is in response to the renewed petition under 37 CFR § 1.59(b), filed August 24, 2011, to expunge information from the above identified application. This application has been allowed.

Petitioner requests that the material submitted to the Patent Office on May 13, 2011 be expunged from the record. Petitioner states either: (A) that the information contains trade secret material, proprietary material and/or material that is subject to a protective order which has not been made public; or (B) that the information submitted was unintentionally submitted and the failure to obtain its return would cause irreparable harm to the party who submitted the information or to the party in interest on whose behalf the information was submitted, and the information has not otherwise been made public. The petition fee set forth in 37 CFR § 1.17(g) has been paid.

The reasons set forth in this petition establishes to the satisfaction of the Director that expungement of the information is appropriate. The file entry for this document has been closed and as such the document is no longer publicly available, which is the IFW equivalent to removal of a paper document from a paper file wrapper.

Therefore, petitioner's petition is GRANTED.

Should there be any questions about this decision please contact Marianne C. Seidel by letter addressed to Director, TC 1600, at the address listed above, or by telephone at 571-272-0584 or by facsimile sent to the general Office facsimile number, 571-273-8300.

/MC Seidel/
Marianne C. Seidel, Quality Assurance Specialist
Technology Center 1600

UNITED STATES PATENT AND TRADEMARK OFFICE

UNITED STATES DEPARTMENT OF COMMERCE
United States Patent and Trademark Office
Address: COMMISSIONER FOR PATENTS
P.O. Box 1450
Alexandria, Virginia 22313-1450
www.uspto.gov

APPLICATION NO.	FILING DATE	FIRST NAMED INVENTOR	ATTORNEY DOCKET NO.	CONFIRMATION NO.
12/471,247	05/22/2009	William H. Eby	1421-371	5510

32905 7590 05/27/2011
JONDLE & ASSOCIATES, P.C.
858 HAPPY CANYON ROAD, SUITE 230
CASTLE ROCK, CO 80108

EXAMINER
WORLEY, CATHY KINGDON

ART UNIT	PAPER NUMBER
1638	

NOTIFICATION DATE	DELIVERY MODE
05/27/2011	ELECTRONIC

Please find below and/or attached an Office communication concerning this application or proceeding.

The time period for reply, if any, is set in the attached communication.

Notice of the Office communication was sent electronically on above-indicated "Notification Date" to the following e-mail address(es):

JondleOA@jondlelaw.com

UNITED STATES PATENT AND TRADEMARK OFFICE

Commissioner for Patents
United States Patent and Trademark Office
P.O. Box 1450
Alexandria, VA 22313-1450
www.uspto.gov

MAY 2 7 2011

JONDLE & ASSOCIATES P.C.
858 HAPPY CANYON ROAD SUITE 230
CASTLE ROCK CO 80108

In re Application of:	:
William H. Eby	:
Serial No.: 12/471,247	: PETITION DECISION
Filed: May 22, 2009	:
Attorney Docket No.: **1421-371**	

This is in response to the petition under 37 CFR § 1.59(b), filed May 13, 2011, to expunge information from the above identified application. This application has not been allowed.

Petitioner requests that the Reply to Request for Information under 37 CFR 1.105, and attachment thereto, submitted to the Patent Office on May 13, 2011, be expunged from the record. Petitioner states either: (A) that the information contains trade secret material, proprietary material and/or material that is subject to a protective order which has not been made public; or (B) that the information submitted was unintentionally submitted and the failure to obtain its return would cause irreparable harm to the party who submitted the information or to the party in interest on whose behalf the information was submitted, and the information has not otherwise been made public. The petition fee set forth in 37 CFR § 1.17(g) has been paid.

This is an examined application which is currently under non-final rejection. As such the information provided has been reviewed, in part, but proceedings in the application have not been terminated. As stated in M.P.E.P. 724, upon allowance or other action closing prosecution in an application, petition may be made for return of Proprietary information. The information cannot be expunged at this time.

The petition is **DISMISSED**. Petitioner may resubmit the petition subsequent to a Notice of Allowability or *ex parte Quayle* action being mailed in the application. No additional petition fee will be required at that time.

Should there be any questions about this decision please contact Marianne C. Seidel by letter addressed to Director, TC 1600, at the address listed above, or by telephone at 571-272-0584 or by facsimile sent to the general Office facsimile number, 571-273-8300.

/MC Seidel/
Marianne C. Seidel, Quality Assurance Specialist
Technology Center 1600

UNITED STATES PATENT AND TRADEMARK OFFICE

UNITED STATES DEPARTMENT OF COMMERCE
United States Patent and Trademark Office
Address: COMMISSIONER FOR PATENTS
P.O. Box 1450
Alexandria, Virginia 22313-1450
www.uspto.gov

APPLICATION NO.	FILING DATE	FIRST NAMED INVENTOR	ATTORNEY DOCKET NO.	CONFIRMATION NO.
12/471,247	05/22/2009	William H. Eby	1421-371	5510

32905 7590 09/12/2011
JONDLE & ASSOCIATES, P.C.
858 HAPPY CANYON ROAD, SUITE 230
CASTLE ROCK, CO 80108

EXAMINER
WORLEY, CATHY KINGDON

ART UNIT	PAPER NUMBER
1638	

NOTIFICATION DATE	DELIVERY MODE
09/12/2011	ELECTRONIC

Please find below and/or attached an Office communication concerning this application or proceeding.

The time period for reply, if any, is set in the attached communication.

Notice of the Office communication was sent electronically on above-indicated "Notification Date" to the following e-mail address(es):

JondleOA@jondlelaw.com

UNITED STATES PATENT AND TRADEMARK OFFICE

SEP 12 2011

Commissioner for Patents
United States Patent and Trademark Office
P.O. Box 1450
Alexandria, VA 22313-1450
www.uspto.gov

JONDLE & ASSOCIATES P.C.
858 HAPPY CANYON ROAD SUITE 230
CASTLE ROCK CO 80108

In re Application of:	:
William H. Eby	: PETITION DECISION
Serial No.: 12/471,247	:
Filed: May 22, 2009	:
Attorney Docket No.: **1421-371**	

This is in response to the renewed petition under 37 CFR § 1.59(b), filed August 24, 2011, to expunge information from the above identified application. This application has been allowed.

Petitioner requests that the material submitted to the Patent Office on May 13, 2011 be expunged from the record. Petitioner states either: (A) that the information contains trade secret material, proprietary material and/or material that is subject to a protective order which has not been made public; or (B) that the information submitted was unintentionally submitted and the failure to obtain its return would cause irreparable harm to the party who submitted the information or to the party in interest on whose behalf the information was submitted, and the information has not otherwise been made public. The petition fee set forth in 37 CFR § 1.17(g) has been paid.

The reasons set forth in this petition establishes to the satisfaction of the Director that expungement of the information is appropriate. The file entry for this document has been closed and as such the document is no longer publicly available, which is the IFW equivalent to removal of a paper document from a paper file wrapper.

Therefore, petitioner's petition is GRANTED.

Should there be any questions about this decision please contact Marianne C. Seidel by letter addressed to Director, TC 1600, at the address listed above, or by telephone at 571-272-0584 or by facsimile sent to the general Office facsimile number, 571-273-8300.

/MC Seidel/
Marianne C. Seidel, Quality Assurance Specialist
Technology Center 1600

UNITED STATES PATENT AND TRADEMARK OFFICE

Commissioner for Patents
United States Patent and Trademark Office
P.O. Box 1450
Alexandria, VA 22313-1450
www.uspto.gov

SCHOX PLC
500 3rd Street, Suite 515
San Francisco CA 94107

MAILED

SEP 03 2010

OFFICE OF PETITIONS

In re Application of	:	
Jonathan A. Smith et al.	:	
Application No. 12/471,299	:	DECISION ON PETITION
Filed: May 22, 2009	:	TO WITHDRAW
Attorney Docket No. TIBI-P15	:	FROM RECORD
	:	

This is a decision on the Request to Withdraw as attorney or agent of record under 37 C.F.R. § 1.36(b), filed August 11, 2010.

The request is **NOT APPROVED.**

The Office will no longer accept address changes to a new practitioner or law firm filed with a Request, absent the filing of a power of attorney to the new representative. The Office will either change the correspondence address of record to the most current address information provided for the assignee of the entire interest who properly became of record under 37 CFR 3.71 or, if no assignee of the entire interest has properly been made of record under 37 CFR 3.71, the most current address information provided for the first named inventor.

Accordingly, the request to withdraw from record cannot be approved because the request to change the correspondence address is not that of: (1) the first named inventor; or (2) an assignee of the entire interest under 37 C.F.R 3.71. If an assignee has ownership in this application, then a Statement under 37 CFR 3.73(b) or a copy of the actual assignment must be provided with a renewed request.

All future communications from the Office will continue to be directed to the above-identified address until otherwise properly notified.

Telephone inquiries concerning this decision should be directed to the undersigned at 571-272- 4618.

/Kimberly Inabinet/

Kimberly Inabinet
Petitions Examiner
Office of Petitions

UNITED STATES PATENT AND TRADEMARK OFFICE

Commissioner for Patents
United States Patent and Trademark Office
P.O. Box 1450
Alexandria, VA 22313-1450
www.uspto.gov

KILPATRICK TOWNSEND & STOCKTON LLP
TWO EMBARCADERO CENTER
EIGHTH FLOOR
SAN FRANCISCO, CA 94111-3834

MAILED
MAR 07 2012
OFFICE OF PETITIONS

In re Application of :
Ryuichi Shiohara :
Application No.: 12/471,329 : ON PETITION
Filed: May 22, 2009 :
Attorney Docket No.: 21654P-017000US :

This is a decision on the petition, filed March 6, 2012, under 37 CFR 1.313(c)(2) to withdraw the above-identified application from issue after payment of the issue fee.

The petition is **GRANTED**.

The above-identified application is withdrawn from issue for consideration of a submission under 37 CFR 1.114 (request for continued examination). See 37 CFR 1.313(c)(2).

Petitioner is advised that the issue fee paid on February 6, 2012, cannot be refunded. If, however, this application is again allowed, petitioner may request that it be applied towards the issue fee required by the new Notice of Allowance.[1]

Telephone inquiries relating to this decision should be directed to the undersigned at (571) 272-3204.

The application is being referred to Technology Center AU 2622 for further processing of the request for continued examination under 37 CFR 1.114.

/SDB/

Sherry D. Brinkley
Petitions Examiner
Office of Petitions

[1] *The request to apply the issue fee to the new Notice may be satisfied by completing and returning the new Part B – Fee(s) Transmittal Form (along with any balance due at the time of submission). Petitioner is advised that the Issue Fee Transmittal Form must be completed and timely submitted to avoid abandonment of the application.*

UNITED STATES PATENT AND TRADEMARK OFFICE

COMMISSIONER FOR PATENTS
UNITED STATES PATENT AND TRADEMARK OFFICE
P.O. BOX 1450
ALEXANDRIA, VA 22313-1450
www.uspto.gov

Dr. BANGER SHIA
Patent Office of Bang Shia
102 Lindencrest Ct
Sugar Land TX 77479-5201

MAILED

FEB 14 2011

OFFICE OF PETITIONS

In re Application of :
Chen, et al. :
Application No. 12/471,379 :
Filed: May 23, 2009 :
Attorney Docket No. CFP-4340 (C-600) :

ON PETITION

This is a decision on the petition captioned "PETITION UNDER 37 C.F.R. 1.47," filed November 4, 2010. Applicants request that the Office accept the declarations under 37 CFR 1.131 and 37 CFR 1.132 without the signature of joint inventor Sayuri Noda. The petition will be treated under (1) 37 CFR 1.183 to waive 37 CFR 1.131 to the extent that it requires that all of the named inventors execute the declaration filed thereunder and (2) 37 CFR 1.183 to waive 37 CFR 1.132 to the extent that it requires that all of the named inventors execute the declaration filed thereunder.[1]

The petition under 37 CFR 1.183 to waive 37 CFR 1.131 with respect to signature requirements is **dismissed**.

The petition under 37 CFR 1.183 to waive 37 CFR 1.132 with respect to signature requirements is **dismissed**.

Any request for reconsideration must be submitted within TWO (2) MONTHS from the mail date of this decision. No further petition fee is required for the request. Extensions of time under 37 CFR 1.136(a) are permitted. The reconsideration request should include a cover letter entitled "Renewed Petitions under 37 CFR 1.183." This is **not** final agency action within the meaning of 5 U.S.C. § 704.

The merits of the petitions will be reached because the Office has not received the two (2) required $400.00 petition fees. Please submit the $400.00 petition fee for the petition under 37 CFR 1.183 to waive 37 CFR 1.131 and $400.00 petition fee for the petition under 37 CFR 1.183 to waive 37 CFR 1.132.

[1] Once an application has received a fully executed oath or declaration and been placed on the files for examination, the provisions of 37 CFR 1.47 no longer apply. The instant petitions are properly treated under 37 CFR 1.183 to waive the appropriate declaration signature requirements.

Further correspondence with respect to this matter should be addressed as follows:

By mail: Mail Stop Petition
Commissioner for Patents
P.O. Box 1450
Alexandria, VA 22313-1450

By facsimile: (571) 273-8300
Attn: Office of Petitions

By hand: U.S. Patent and Trademark Office
Customer Service Window
Randolph Building
401 Dulany Street
Alexandria, VA 22314

By internet: EFS-Web
www.uspto.gov/ebc/efs_help.html
(for help using EFS-Web call the
Patent Electronic Business Center
at (866) 217-9197)

Telephone inquiries regarding this communication should be directed to the undersigned at (571) 272-3230.

Shirene Willis Brantley
Senior Petitions Attorney
Office of Petitions

UNITED STATES PATENT AND TRADEMARK OFFICE

Commissioner for Patents
United States Patent and Trademark Office
P.O. Box 1450
Alexandria, VA 22313-1450
www.uspto.gov

MAILED

APR 11 2011

OFFICE OF PETITIONS

Dr. BANGER SHIA
Patent Office of Bang Shia
102 Lindencrest Ct
Sugar Land TX 77479-5201

In re Application of	:	
Chen, et al.	:	
Application No. 12/471,379	:	ON PETITION
Filed: May 23, 2009	:	
Attorney Docket No. CFP-4340 (C-600)	:	

This is a decision on the renewed petition under 37 CFR 1.183 to waive 37 CFR 1.131 to the extent that it requires that all of the named inventors execute the declaration filed thereunder and under 37 CFR 1.183 to waive 37 CFR 1.132 to the extent that it requires that all of the named inventors execute the declaration filed thereunder, filed March 16, 2011.

The petition under 37 CFR 1.183 to waive 37 CFR 1.131with respect to signature requirements is **dismissed**.

The petition under 37 CFR 1.183 to waive 37 CFR 1.132 with respect to signature requirements is **dismissed**.

Any request for reconsideration must be submitted within TWO (2) MONTHS from the mail date of this decision. No further petition fee is required for the request. Extensions of time under 37 CFR 1.136(a) are permitted. The reconsideration request should include a cover letter entitled "Renewed Petitions under 37 CFR 1.183." This is **not** final agency action within the meaning of 5 U.S.C. § 704.

Petitioners assert that all of the named inventors contributed to the conception of the claimed invention which is under rejection. However, only three of the four joint inventors, Chen, Tang, and Huang, have executed a declaration under 37 CFR 1.131. Petitioners allege that Inventor Sayuri Noda cannot be located to sign the declaration under 37 CFR 1.131 and request that the Office accept the declaration executed by less than all the joint inventors.

37 CFR 1.131(a) states,

> When any claim of an application or a patent under reexamination is rejected, the inventor of the subject matter of the rejected claim, the owner of the patent under reexamination, or the party qualified under §§ 1.42, 1.43, or 1.47, may submit an appropriate oath or declaration to establish invention of the subject matter of the rejected

claim prior to the effective date of the reference or activity on which the rejection is based.

The Office has stated the signature requirements can be waived in certain circumstances.

(1) The assignee or other party in interest can sign the affidavit or declaration if none of the inventors will sign the declaration.

(2) The affidavit or declaration can be signed by fewer than all the inventors if the other inventors are deceased, refuse to sign, or are unavailable.

Petitioners have failed to prove the non-signing inventor, Sayuri Noda, cannot be located to sign the declaration under 37 CFR 1.131. In addition, the declaration under 37 CFR 1.131 is not acceptable.

While this is not a petition under 37 CFR 1.47(a), it is evaluated much the same way a petition under 37 CFR 1.47(a) is. When it is asserts that an inventor cannot be located to sign a declaration, a **showing of diligence** in attempting to locate him/her is required. The petition merely states that Ms. Noda has resigned from Largan Precision Co., Ltd. and cannot be reached. The evidence of registered mail to the inventor, while referenced in the petition, cannot be located in the application file. What efforts were made to locate Ms. Noda? What was sent to Ms. Noda? It appears there was no place for her to execute the declaration under 37 CFR 1.131, as her name was not included on the declaration.

Petitioners should explain the efforts made to date to locate Ms. Noda. Petitioners should probably engage in further efforts to locate Ms. Noda. The following is a list of evidentiary sources that are commonly relied upon to prove inability to locate an inventor: searches of Internet databases; inquiries of local telephone directories; telegrams; and documented inquiries of last known employers. Every listed type of search need not be done. However, a diligent effort to find the inventor must be made.

Documentary evidence that supports a finding that the non-signing inventor could not be found or reached should be made part of any affidavits or declarations that fully describe the exact facts which are relied on to establish that a diligent effort was made to locate the non-signing inventor. Printed computer records would suffice.

The affidavit or declaration of facts must be signed, where at all possible, by a person having *firsthand knowledge* of the facts recited therein. Statements based on hearsay will not normally be accepted. It is important that the affidavit or declaration contain statements of fact as opposed to conclusions.

If diligent search for Ms. Noda results in her being located and she expressly refuses to sign a declaration under 37 CFR 1.131, then a statement from the person to whom that refusal was made should be made of record. If his refusal is in writing, the correspondence should be made of record.

The declaration under 37 CFR 1.131 is not acceptable because Chun-Shan Chen has signed it in his capacity as inventor and as representative of the purported assignee. The assignee or other

party in interest can sign the affidavit or declaration if **none** of the inventors will sign the declaration. In this case, three of four joint inventors have signed the declaration under 37 CFR 1.131. Therefore, a new declaration under 37 CFR 1.131 must be submitted that lists all four inventors, is executed by the three participating inventors, and leaves a blank space where Ms. Noda's signature should be.

Only three of the four joint inventors, Chen, Tang, and Huang, have executed a declaration under 37 CFR 1.132.

Petitioners allege that Inventor Sayuri Noda cannot be located to sign the declaration under 37 CFR 1.132 and request that the Office accept the declaration executed by less than all the joint inventors.

37 CFR 1.132 states,

> Affidavits or declarations traversing rejections or objections.
>
> When any claim of an application or a patent under reexamination is rejected or objected to, any evidence submitted to traverse the rejection or objection on a basis not otherwise provided for must be by way of an oath or declaration under this section.

The Office waives signature requirements in certain circumstances, i.e.:

(1) The assignee or other party in interest can sign the affidavit or declaration if none of the inventors will sign the declaration.
(2) The affidavit or declaration can be signed by fewer than all the inventors if the other inventors are deceased, refuse to sign, or are unavailable.

The petition for waiver of 37 CFR 1.132 with respect to signature requirements is dismissed for the same reasons that the petition for waiver of 37 CFR 1.131 with respect to signature requirements was dismissed.

Petitioners have failed to prove the non-signing inventor, Sayuri Noda, cannot be located to sign the declaration under 37 CFR 1.132. In addition, the declaration under 37 CFR 1.132 is not acceptable.

Petitioners must provide documentary evidence that despite a diligent search for her, that she could not be located. Petitioners must submit a new declaration under 37 CFR 1.132 that lists all four inventors, is executed by the three participating inventors, and leaves a blank space where Ms. Noda's signature should be.

Inquiries regarding this communication may be directed to the undersigned at (571) 272-3230.

Further correspondence with respect to this matter should be addressed as follows:

By mail: Mail Stop Petition
Commissioner for Patents
P.O. Box 1450
Alexandria, VA 22313-1450

By facsimile: (571) 273-8300
Attn: Office of Petitions

By hand: U.S. Patent and Trademark Office
Customer Service Window
Randolph Building
401 Dulany Street
Alexandria, VA 22314

By internet: EFS-Web
www.uspto.gov/ebc/efs_help.html
(for help using EFS-Web call the
Patent Electronic Business Center
at (866) 217-9197)

Telephone inquiries regarding this communication should be directed to the undersigned at (571) 272-3230.

Shirene Willis Brantley

Shirene Willis Brantley
Senior Petitions Attorney
Office of Petitions

UNITED STATES PATENT AND TRADEMARK OFFICE

Commissioner for Patents
United States Patent and Trademark Office
P.O. Box 1450
Alexandria, VA 22313-1450
www.uspto.gov

MAILED
JUN 16 2011
OFFICE OF PETITIONS

Dr. BANGER SHIA
Patent Office of Bang Shia
102 Lindencrest Ct
Sugar Land TX 77479-5201

In re Application of	:	
Chen, et al.	:	
Application No. 12/471,379	:	ON PETITION
Filed: May 23, 2009	:	
Attorney Docket No. CFP-4340 (C-600)	:	

This is a decision on the renewed petition under 37 CFR 1.183 to waive 37 CFR 1.131 to the extent that it requires that all of the named inventors execute the declaration filed thereunder and under 37 CFR 1.183 to waive 37 CFR 1.132 to the extent that it requires that all of the named inventors execute the declaration filed thereunder, filed May 27, 2011.

The petition under 37 CFR 1.183 to waive 37 CFR 1.131with respect to signature requirements is **dismissed**.

The petition under 37 CFR 1.183 to waive 37 CFR 1.132 with respect to signature requirements is **dismissed**.

Any request for reconsideration must be submitted within TWO (2) MONTHS from the mail date of this decision. No further petition fee is required for the request. Extensions of time under 37 CFR 1.136(a) are permitted. The reconsideration request should include a cover letter entitled "Renewed Petitions under 37 CFR 1.183." This is **not** final agency action within the meaning of 5 U.S.C. § 704.

Petitioners assert that all of the named inventors contributed to the conception of the claimed invention which is under rejection. However, only three of the four joint inventors, Chen, Tang, and Huang, have executed a declaration under 37 CFR 1.131. Petitioners allege that Inventor Sayuri Noda cannot be located to sign the declaration under 37 CFR 1.131 and request that the Office accept the declaration executed by less than all the joint inventors.

37 CFR 1.131(a) states,

> When any claim of an application or a patent under reexamination is rejected, the inventor of the subject matter of the rejected claim, the owner of the patent under reexamination, or the party qualified under §§ 1.42, 1.43, or 1.47, may submit an appropriate oath or declaration to establish invention of the subject matter of the rejected

claim prior to the effective date of the reference or activity on which the rejection is based.

The Office has stated the signature requirements can be waived in certain circumstances.

(1) The assignee or other party in interest can sign the affidavit or declaration if none of the inventors will sign the declaration.

(2) The affidavit or declaration can be signed by fewer than all the inventors if the other inventors are deceased, refuse to sign, or are unavailable.

Petitioners have failed to prove the non-signing inventor, Sayuri Noda, cannot be located to sign the declaration under 37 CFR 1.131.

While this is not a petition under 37 CFR 1.47(a), it is evaluated much the same way a petition under 37 CFR 1.47(a) is. When it is asserted that an inventor cannot be located to sign a declaration, a **showing of diligence** in attempting to locate him/her is required. The purported evidence of registered mail to the non-signing inventor which was referenced in the original petition has not been submitted.

Petitioners sent an email to Ms. Noda on April 26, 2011, requesting her signature on some unspecified declarations. Petitioners are informed that e-mailing is generally not accepted as a means to communicate with a non-signing inventor. This is because the Office cannot know definitely if the message was received; people are not as careful in deleting e-mails as they are in throwing out mail as shown by bulk folder deletions and the fact that some people might not check e-mails frequently; the Office does not know if the recipient has the program to open the specific attachment; and PTO guidelines regarding accepting e-mail reflects the fact that the Office does not have the same confidence in e-mail as it does in USPS service.

The Office typically requires documentary evidence of successful e-mailing in the form of a response e-mail from the non-signing inventor in which the inventor acknowledges receipt of the e-mail and his ability to read the attachments. Sending an e-mail alone is not sufficient.

Petitioners should engage in further efforts to locate Ms. Noda. The following is a list of evidentiary sources that are commonly relied upon to prove inability to locate an inventor: searches of Internet databases; inquiries of local telephone directories and national registries; telegrams; and documented inquiries of last known employers. Every listed type of search need not be done. However, a diligent effort to find the inventor must be made.

Documentary evidence that supports a finding that the non-signing inventor could not be found or reached should be made part of any affidavits or declarations that fully describe the exact facts which are relied on to establish that a diligent effort was made to locate the non-signing inventor. Printed computer records would suffice.

The affidavit or declaration of facts must be signed, where at all possible, by a person having *firsthand knowledge* of the facts recited therein. Statements based on hearsay will not normally be accepted. It is important that the affidavit or declaration contain statements of fact as opposed to conclusions.

If diligent search for Ms. Noda results in her being located and she expressly refuses to sign a declaration under 37 CFR 1.131, then a statement from the person to whom that refusal was made should be made of record. If his refusal is in writing, the correspondence should be made of record.

Only three of the four joint inventors, Chen, Tang, and Huang, have executed a declaration under 37 CFR 1.132.

Petitioners allege that Inventor Sayuri Noda cannot be located to sign the declaration under 37 CFR 1.132 and request that the Office accept the declaration executed by less than all the joint inventors.

37 CFR 1.132 states,

> Affidavits or declarations traversing rejections or objections.
>
> When any claim of an application or a patent under reexamination is rejected or objected to, any evidence submitted to traverse the rejection or objection on a basis not otherwise provided for must be by way of an oath or declaration under this section.

The Office waives signature requirements in certain circumstances, i.e.:

(1) The assignee or other party in interest can sign the affidavit or declaration if none of the inventors will sign the declaration.

(2) The affidavit or declaration can be signed by fewer than all the inventors if the other inventors are deceased, refuse to sign, or are unavailable.

The petition for waiver of 37 CFR 1.132 with respect to signature requirements is dismissed for the same reasons that the petition for waiver of 37 CFR 1.131 with respect to signature requirements was dismissed. Petitioners have failed to prove the non-signing inventor, Sayuri Noda, cannot be located to sign the declaration under 37 CFR 1.132.

Petitioners must provide documentary evidence that despite a diligent search for her, that she could not be located.

Inquiries regarding this communication may be directed to the undersigned at (571) 272-3230.

Further correspondence with respect to this matter should be addressed as follows:

By mail: Mail Stop Petition
Commissioner for Patents
P.O. Box 1450
Alexandria, VA 22313-1450

By facsimile: (571) 273-8300
Attn: Office of Petitions

By hand: U.S. Patent and Trademark Office
Customer Service Window
Randolph Building
401 Dulany Street
Alexandria, VA 22314

By internet: EFS-Web
www.uspto.gov/ebc/efs_help.html
(for help using EFS-Web call the
Patent Electronic Business Center
at (866) 217-9197)

Telephone inquiries regarding this communication should be directed to the undersigned at (571) 272-3230.

Shirene Willis Brantley

Shirene Willis Brantley
Senior Petitions Attorney
Office of Petitions

UNITED STATES PATENT AND TRADEMARK OFFICE

Commissioner for Patents
United States Patent and Trademark Office
P.O. Box 1450
Alexandria, VA 22313-1450
www.uspto.gov

Dr. BANGER SHIA
Patent Office of Bang Shia
102 Lindencrest Ct
Sugar Land TX 77479-5201

MAILED

SEP 08 2011

OFFICE OF PETITIONS

In re Application of :
Chen, et al. :
Application No. 12/471,379 : ON PETITION
Filed: May 23, 2009 :
Attorney Docket No. CFP-4340 (C-600) :

This is a decision on the renewed petition under 37 CFR 1.183 to waive 37 CFR 1.131 to the extent that it requires that all of the named inventors execute the declaration filed thereunder and under 37 CFR 1.183 to waive 37 CFR 1.132 to the extent that it requires that all of the named inventors execute the declaration filed thereunder, filed August 16, 2011.

The petition under 37 CFR 1.183 to waive 37 CFR 1.131with respect to signature requirements is **dismissed**.

The petition under 37 CFR 1.183 to waive 37 CFR 1.132 with respect to signature requirements is **dismissed**.

Any request for reconsideration must be submitted within TWO (2) MONTHS from the mail date of this decision. No further petition fee is required for the request. Extensions of time under 37 CFR 1.136(a) are permitted. The reconsideration request should include a cover letter entitled "Renewed Petitions under 37 CFR 1.183." This is **not** final agency action within the meaning of 5 U.S.C. § 704.

Petitioners assert that all of the named inventors contributed to the conception of the claimed invention which is under rejection. However, only three of the four joint inventors, Chen, Tang, and Huang, have executed a declaration under 37 CFR 1.131. Petitioners allege that Inventor Sayuri Noda cannot be located to sign the declaration under 37 CFR 1.131 and request that the Office accept the declaration executed by less than all the joint inventors.

37 CFR 1.131(a) states,

> When any claim of an application or a patent under reexamination is rejected, the inventor of the subject matter of the rejected claim, the owner of the patent under reexamination, or the party qualified under §§ 1.42, 1.43, or 1.47, may submit an appropriate oath or declaration to establish invention of the subject matter of the rejected

claim prior to the effective date of the reference or activity on which the rejection is based.

The Office has stated the signature requirements can be waived in certain circumstances.

(1) The assignee or other party in interest can sign the affidavit or declaration if none of the inventors will sign the declaration.

(2) The affidavit or declaration can be signed by fewer than all the inventors if the other inventors are deceased, refuse to sign, or are unavailable.

Petitioners have failed to prove the non-signing inventor, Sayuri Noda, cannot be located to sign the declaration under 37 CFR 1.131.

While this is not a petition under 37 CFR 1.47(a), it is evaluated much the same way a petition under 37 CFR 1.47(a) is. When it is asserted that an inventor cannot be located to sign a declaration, a **showing of diligence** in attempting to locate him/her is required. The purported evidence of registered mail to the non-signing inventor which was referenced in the original petition has not been submitted.

Petitioners successfully mailed a letter to Ms. Noda's bank, requesting her mailing address, which may be information protected by Taiwanese privacy laws . In any event, petitioners have not received a reply from her bank. This action does not rise to the level of diligence required to establish inability to locate the inventor.

Petitioners should engage in further efforts to locate Ms. Noda. The following is a list of evidentiary sources that are commonly relied upon to prove inability to locate an inventor: searches of Internet databases; inquiries of local telephone directories and national registries; telegrams; and documented inquiries of last known employers. Every listed type of search need not be done. However, a diligent effort to find the inventor must be made.

Petitioners claim to have contacted the Ministry of Foreign Affairs of Republic of China, Taiwan requesting information on Ms. Noda's whereabouts. The Office is interested in reviewing any response provided by the Ministry of Foreign Affairs of Republic of China, Taiwan.

Documentary evidence that supports a finding that the non-signing inventor could not be found or reached should be made part of any affidavits or declarations that fully describe the exact facts which are relied on to establish that a diligent effort was made to locate the non-signing inventor. Printed computer records would suffice.

The affidavit or declaration of facts must be signed, where at all possible, by a person having *firsthand knowledge* of the facts recited therein. Statements based on hearsay will not normally be accepted. It is important that the affidavit or declaration contain statements of fact as opposed to conclusions.

If diligent search for Ms. Noda results in her being located and she expressly refuses to sign a declaration under 37 CFR 1.131, then a statement from the person to whom that refusal was

made should be made of record. If his refusal is in writing, the correspondence should be made of record.

Only three of the four joint inventors, Chen, Tang, and Huang, have executed a declaration under 37 CFR 1.132.

Petitioners allege that Inventor Sayuri Noda cannot be located to sign the declaration under 37 CFR 1.132 and request that the Office accept the declaration executed by less than all the joint inventors.

37 CFR 1.132 states,

> Affidavits or declarations traversing rejections or objections.
>
> When any claim of an application or a patent under reexamination is rejected or objected to, any evidence submitted to traverse the rejection or objection on a basis not otherwise provided for must be by way of an oath or declaration under this section.

The Office waives signature requirements in certain circumstances, i.e.:

(1) The assignee or other party in interest can sign the affidavit or declaration if none of the inventors will sign the declaration.

(2) The affidavit or declaration can be signed by fewer than all the inventors if the other inventors are deceased, refuse to sign, or are unavailable.

The petition for waiver of 37 CFR 1.132 with respect to signature requirements is dismissed for the same reasons that the petition for waiver of 37 CFR 1.131 with respect to signature requirements was dismissed. Petitioners have failed to prove the non-signing inventor, Sayuri Noda, cannot be located to sign the declaration under 37 CFR 1.132.

Petitioners must provide documentary evidence that despite a diligent search for her, that she could not be located.

Inquiries regarding this communication may be directed to the undersigned at (571) 272-3230.

Further correspondence with respect to this matter should be addressed as follows:

By mail: Mail Stop Petition
Commissioner for Patents
P.O. Box 1450
Alexandria, VA 22313-1450

By facsimile: (571) 273-8300
Attn: Office of Petitions

By hand: U.S. Patent and Trademark Office
Customer Service Window
Randolph Building
401 Dulany Street
Alexandria, VA 22314

By internet: EFS-Web
www.uspto.gov/ebc/efs_help.html
(for help using EFS-Web call the
Patent Electronic Business Center
at (866) 217-9197)

Telephone inquiries regarding this communication should be directed to the undersigned at (571) 272-3230.

Shirene Willis Brantley
Senior Petitions Attorney
Office of Petitions

UNITED STATES PATENT AND TRADEMARK OFFICE

Commissioner for Patents
United States Patent and Trademark Office
P.O. Box 1450
Alexandria, VA 22313-1450
www.uspto.gov

Dr. BANGER SHIA
Patent Office of Bang Shia
102 Lindencrest Ct
Sugar Land TX 77479-5201

MAILED

NOV 10 2011

OFFICE OF PETITIONS

In re Application of	:	
Chen, et al.	:	
Application No. 12/471,379	:	ON PETITION
Filed: May 23, 2009	:	
Attorney Docket No. CFP-4340 (C-600)	:	

This is a decision on the renewed petition under 37 CFR 1.183 to waive 37 CFR 1.131 to the extent that it requires that all of the named inventors execute the declaration filed thereunder and under 37 CFR 1.183 to waive 37 CFR 1.132 to the extent that it requires that all of the named inventors execute the declaration filed thereunder, filed November 7, 2011 and supplemented on November 9, 2011.

The petition under 37 CFR 1.183 to waive 37 CFR 1.131with respect to signature requirements is **granted**.

The petition under 37 CFR 1.183 to waive 37 CFR 1.132 with respect to signature requirements is **granted**.

Petitioners assert that all of the named inventors contributed to the conception of the claimed invention which is under rejection. However, only three of the four joint inventors, Chen, Tang, and Huang, have executed a declaration under 37 CFR 1.131. Petitioners allege that Inventor Sayuri Noda cannot be located to sign the declaration under 37 CFR 1.131 and request that the Office accept the declaration executed by less than all the joint inventors.

37 CFR 1.131(a) states,

> When any claim of an application or a patent under reexamination is rejected, the inventor of the subject matter of the rejected claim, the owner of the patent under reexamination, or the party qualified under §§ 1.42, 1.43, or 1.47, may submit an appropriate oath or declaration to establish invention of the subject matter of the rejected claim prior to the effective date of the reference or activity on which the rejection is based.

The Office has stated the signature requirements can be waived in certain circumstances, i.e.:

(1) The assignee or other party in interest can sign the affidavit or declaration if none of the inventors will sign the declaration.

(2) The affidavit or declaration can be signed by fewer than all the inventors if the other inventors are deceased, refuse to sign, or are unavailable.

Petitioners have established that, despite diligent efforts to locate her, the non-signing inventor, Sayuri Noda cannot be located to sign the declaration under 37 CFR 1.131. Therefore, the signature requirement of Ms. Noda on the declaration under 37 CFR 1.131, filed May 27, 2011, is waived.

Only three of the four joint inventors, Chen, Tang, and Huang, have executed a declaration under 37 CFR 1.132. Petitioners allege that Inventor Sayuri Noda cannot be located to sign the declaration under 37 CFR 1.132 and request that the Office accept the declaration under 37 CFR 1.132 executed by less than all the joint inventors.

37 CFR 1.132 states,

> Affidavits or declarations traversing rejections or objections.
>
> When any claim of an application or a patent under reexamination is rejected or objected to, any evidence submitted to traverse the rejection or objection on a basis not otherwise provided for must be by way of an oath or declaration under this section.

The Office waives signature requirements in certain circumstances, i.e.:

(1) The assignee or other party in interest can sign the affidavit or declaration if none of the inventors will sign the declaration.

(2) The affidavit or declaration can be signed by fewer than all the inventors if the other inventors are deceased, refuse to sign, or are unavailable.

Petitioners have established that, despite diligent efforts to locate her, the non-signing inventor, Sayuri Noda cannot be located to sign the declaration under 37 CFR 1.132. Therefore, the signature requirement of Ms. Noda on the declaration under 37 CFR 1.132, filed May 27, 2011, is waived.

The application is being referred to Technology Center A.U. 2873 for the examiner of record's consideration and review of declarations under 37 CFR 1.131 and 37 CFR 1.132, filed May 27, 2011.

Telephone inquiries regarding this communication should be directed to the undersigned at (571) 272-3230.

Shirene Willis Brantley

Shirene Willis Brantley
Senior Petitions Attorney
Office of Petitions

UNITED STATES PATENT and TRADEMARK OFFICE

COMMISSIONER FOR PATENTS
UNITED STATES PATENT AND TRADEMARK OFFICE
P.O BOX 1450
ALEXANDRIA, VA 22313-1450
www.uspto.gov

SOROKER-AGMON ADVOCATE AND PATENT ATTORNEYS
NOLTON HOUSE, 14 SHENKAR STREET
HERZELIYA PITUACH 46725 IL ISRAEL

MAILED
APR 01 2011
PCT LEGAL ADMINISTRATION

In re Application of :
KATZ et al :
Application No.: 12/471,381 :
Filing Date: 05 May 2009 : DECISION
Attorney Docket No.: 4305/9.3 :
For: Apparatus and Method for Finding Visible :
Points in a cloud Point :

This decision is in response to the "PETITION TO RECORD THE BENEFIT OF A PRIOR FILED APPLICATION" received 25 January 2011, which is being treated as a petition under 37 CFR 1.78.

BACKGROUND

On 24 May 2009, applicants filed a transmittal letter for entry under 35 USC 111(a) in the USPTO.

On 25 January 2011, applicants filed a petition under 37 CFR 1.78 to claim priority from US provisional application No. 60/867, 725 filed on November 29, 2006. However, the petition filed has no signature from the attorney submitting it.

DISCUSSION

USPTO rule is on point in this instance: **§ 1.34 Acting in a representative capacity.**

"When a patent practitioner acting in a representative capacity appears in person or signs a paper in practice before the United States Patent and Trademark Office in a patent case, his or her personal appearance or signature shall constitute a representation to the United States Patent and Trademark Office that under the provisions of this subchapter and the law, he or she is authorized to represent the particular party on whose behalf he or she acts. In filing such a paper, the patent practitioner must set forth his or her registration number, his or her name and signature. Further proof of authority to act in a representative capacity may be required."

Consequently, at this time no action can be taken on the petition filed on 25 January 2011 because the petition is missing the required signature from the person acting in a representative capacity.

Accordingly, no further will be taken on this submission. A proper petition under 37 CFR 1.78 is required.

DECISION

For the reasons above, the petition under 37 CFR 1.78(a)(3) is **DISMISSED** .

For reasons above, the papers filed on 25 January 2011 will be placed in the application file and no further action will be taken on them.

Any inquiries concerning this decision may be directed to Rafael Bacares at (571) 272-3276.

If reconsideration of the merits of the petition under 37 CFR 1.78 is desired, applicant must file a request for reconsideration within **TWO (2) MONTHS** from the mail date of this Decision. Any reconsideration request should include a cover letter entitled "Renewed Petition Under 37 CFR 1.78." Extensions of time are available under 37 CFR 1.136(a).

Any further correspondence with respect to this matter may be filed electronically via EFS-Web selecting the document description "Petition for review and processing by the PCT Legal Office" or by mail addressed to Mail Stop PCT, Commissioner for Patents, Office of PCT Legal Administration, P.O. Box 1450, Alexandria, Virginia 22313-1450, with the contents of the letter marked to the attention of the Office of PCT Legal Administration.

Rafael Bacares
PCT Legal Examiner
PCT Legal Office
Telephone: (703) 308-6312
Facsimile: (703) 308-6459

UNITED STATES PATENT and TRADEMARK OFFICE

COMMISSIONER FOR PATENTS
UNITED STATES PATENT AND TRADEMARK OFFICE
P.O BOX 1450
ALEXANDRIA, VA 22313-1450
www.uspto.gov

SOROKER-AGMON ADVOCATE AND PATENT ATTORNEYS
NOLTON HOUSE, 14 SHENKAR STREET
HERZELIYA PITUACH 46725 IL ISRAEL

MAILED
JUL 20 2011
PCT LEGAL ADMINISTRATION

In re Application of	:	DECISION ON
KATZ et al	:	
Application No.: 12/471,381	:	
Filing Date: 24 May 2009	:	PETITION UNDER
Attorney's Docket No.: 4305/9.3	:	
For: Apparatus and Method for Finding Visible	:	37 CFR §§1.78(a)(3)
Points in a cloud Point	:	and (a)(6)

This is in response to applicants' communication "RENEWED PETITION UNDER 37 CFR 1.78 TO RECORD BENEFIT OF A PRIOR FILED APPLICATION," filed on 02 May 2011, which is being treated as a petition under 37 CFR §§1.78(a)(3) and (a)(6).

In a decision from this Office on 01 April 2011, the petition filed under 37 CFR §1.78(a)(3) was dismissed. The decision stated that no action could be taken because the petition was the required signature from the person acting in a representative capacity.

On 02 May 2011, petitioner filed a renewed petition pursuant 37 CFR §1.78(a)(3) and (a)(6).

The renewed petition is **GRANTED**.

The present nonprovisional application was filed after November 29, 2000, and the claim herein for the benefit of priority to the prior-filed international and provisional applications is submitted after expiration of the period specified in 37 CFR 1.78(a)(2)(ii) and 1.78(a)(5)(ii). Therefore, this is a proper petition under 37 CFR 1.78(a)(3) and 1.78(a)(6).

A petition for acceptance of a claim for late priority under 37 CFR §§ 1.78(a)(3) and 1.78(a)(6) is only applicable to those applications filed on or after November 29, 2000. Further, the petition is appropriate only after the expiration of the period specified in 37 CFR §§ 1.78(a)(2)(ii) and 1.78(a)(5)(ii). In addition, the petition under 37 CFR §§ 1.78(a)(3) and 1.78(a)(6) must be accompanied by:

(1) the reference required by 35 U.S.C. §§ 120 and 119(e) and 37 CFR §§ 1.78(a)(2)(i) and 1.78(a)(5)(i) of the prior-filed application, unless previously submitted;

(2) the surcharge set forth in § 1.17(t); and

(3) a statement that the entire delay between the date the claim was due under 37 CFR §§ 1.78(a)(2)(ii) and 1.78(a)(5)(ii) and the date the claim was filed was unintentional. The Director may require additional where there is a question whether the delay was unintentional.

The instant nonprovisional application was filed on 24 May 2009 and the claim for benefit herein is submitted after the expiration of the period specified in 37 CFR 1.78(a)(2)(ii) and 1.78(a)(5)(ii) . *See* 35 U.S.C. §§120, 365(c) and 119(e).

Regarding requirement (1), a proper reference to the prior-filed applications has been included in an amendment to the first sentence of the specification following the title by inserting the proper relationship to the parent international application PCT/IL07/01472, and the provisional application 60/867,725, as required by 37 CFR 1.78(a)(2)(iii) and 1.78(a)(5)(iii).

Regarding item (2), the proper surcharge of $1,410.00 under 37 CFR 1.17(t) has been charged to Deposit Account No.: 50-4339.

Regarding requirement (3), the statement that, [t]he entire delay between the date the claim was due under 37 CFR (a)(2)(ii) and the date of filing this petition is unintentional" is being construed as a statement that "the entire delay between the date the claim was due under 37 CFR §§ 1.78(a)(2)(ii) and 1.78(a)(5)(ii) and the date the claim was filed was unintentional." Petitioner must immediately notify the Office of PCT Legal Administration if such an interpretation of the statement in the petition is not correct.

Accordingly, having found that the petition for acceptance of an unintentionally delayed claim for the benefit of priority under 35 U.S.C. §§ 120 and 119(e) to the prior-filed applications satisfies the conditions of 37 CFR §§ 1.78(a)(3) and 1.78(a)(6), the petition is granted.

The granting of the petition to accept the delayed benefit claim to the prior-filed applications under 37 CFR §§ 1.78(a)(3) and 1.78(a)(6) should not be construed as meaning that this application is entitled to the benefit of the filing date of the prior-filed applications. In order for this application to be entitled to the benefit of the prior-filed applications, all other requirements under 35 U.S.C. §§120 and 365(c) and 1.78(a)(1) and (a)(2) and under 35 U.S.C. §119(e) and 37 CFR 1.78(a)(4) and (a)(5) must be met. Similarly, the fact that the corrected Filing Receipt accompanying this decision on petition includes the prior-filed applications should not be construed as meaning that applicant is entitled to the claim for benefit of priority to the prior-filed applications noted thereon. Accordingly, the examiner will, in due course, consider this benefit claim and determine whether this application is entitled to the benefit of the earlier filing date.

A corrected Filing Receipt, which includes the priority claim to the prior-filed applications, accompanies this decision on petition.

CONCLUSION

For the reasons above, the petition under 37 CFR §§1.78(a)(3) and (a)(6) is **GRANTED**.

Any questions concerning this matter may be directed to Rafael Bacares at (571) 272-3276. All other inquires concerning either the examination procedures or status of the application should be directed to the Technology Center.

This application will be forwarded to Technology Center Art Unit 2628 for consideration by the examiner of applicants' entitlement to claim benefit to the prior-filed applications.

Rafael Bacares
Legal Examiner
PCT Legal Administrative Office
Telephone: (571) 272-3276
Facsimile: (571) 273-0459

Bryan Lin
Legal Examiner
PCT Legal Administrative Office

UNITED STATES PATENT AND TRADEMARK OFFICE

Commissioner for Patents
United States Patent and Trademark Office
P.O. Box 1450
Alexandria, VA 22313-1450
www.uspto.gov

DUANE MORRIS LLP – HOUSTON
1330 POST OAK BLVD.
SUITE 800
HOUSTON TX 77056

MAILED

JUL 14 2011

OFFICE OF PETITIONS

In re Application of :
Charles Robert Mynhier et al :
Application No. 12/471,425 : DECISION ON PETITION
Filed: May 25, 2009 :
Attorney Docket No. D5433-739 :

This is a decision on the petition under the unintentional provisions of 37 CFR 1.137(b), filed April 12, 2011, to revive the above-identified application.

The petition is **GRANTED**.

The petition satisfies the conditions for revival pursuant to the provisions of 37 CFR 1.137(b) in that (1) the reply in the form of the issue and publication fees; (2) the petition fee; and (3) the required statement of unintentional delay have been received. Accordingly, the reply to the Notice of Allowance mailed December 1, 2010, is accepted as having been unintentionally delayed.

Telephone inquiries concerning this decision should be directed to the undersigned at (571) 272-3208.

This application is being referred to the Office of Data Management to be processed into a patent.

/KOC/
Karen Creasy
Petitions Examiner
Office of Petitions

UNITED STATES PATENT AND TRADEMARK OFFICE

Commissioner for Patents
United States Patent and Trademark Office
P.O. Box 1450
Alexandria, VA 22313-1450
www.uspto.gov

MAILED

OCT 01 2010

OFFICE OF PETITIONS

STONEMAN VOLK PATENT GROUP
P.O. BOX 40070
PHOENIX AZ 85067-0070

In re Application of	:	
Jonna M. PURVIS, et al	:	
Application No. 12/471,426	:	DECISION ON PETITION
Filed: May 25, 2009	:	TO WITHDRAW
Attorney Docket No. P05411-2	:	FROM RECORD
	:	

This is a decision on the Request to Withdraw as attorney or agent of record under 37 C.F.R. § 1.36(b), filed September 3, 2010.

The request is **APPROVED**.

A grantable request to withdraw as attorney/agent of record must be signed by every attorney/agent seeking to withdraw or contain a clear indication that one attorney is signing on behalf of another/others. The Office requires the practitioner(s) requesting withdrawal to certify that he, she, or they have: (1) given reasonable notice to the client, prior to the expiration of the response period, that the practitioner(s) intends to withdraw from employment; (2) delivered to the client or a duly authorized representative of the client all papers and property (including funds) to which the client is entitled; and (3) notified the client of any responses that may be due and the time frame within which the client must respond, pursuant 37 CFR 10.40(c).

The request was signed by Michael D. Volk Jr., on behalf of the attorneys of record associated with Customer No. 28548.

The attorneys of record associated with Customer No. 28548 have been withdrawn.

Applicant is reminded that there is no attorney of record at this time.

The correspondence address of record has been changed and the new correspondence address is the address indicated below until otherwise properly notified.

Telephone inquiries concerning this decision should be directed to the undersigned at (571) 272-6735.

/DCG/
Diane C. Goodwyn
Petitions Examiner
Office of Petitions

cc: JONNA M. PURVIS
3212 ANGUS DRIVE
PRESCOTT AZ 86305

UNITED STATES PATENT AND TRADEMARK OFFICE

UNITED STATES DEPARTMENT OF COMMERCE
United States Patent and Trademark Office
Address: COMMISSIONER FOR PATENTS
P.O. Box 1450
Alexandria, Virginia 22313-1450
www.uspto.gov

APPLICATION NUMBER	FILING OR 371(C) DATE	FIRST NAMED APPLICANT	ATTY. DOCKET NO./TITLE
12/471,426	05/25/2009	Jonna M. Purvis	P05411-2

CONFIRMATION NO. 5883

POWER OF ATTORNEY NOTICE

28548
Stoneman Volk Patent Group
P.O. Box 40070
PHOENIX, AZ 85067-0070

OC000000043800650

Date Mailed: 09/30/2010

NOTICE REGARDING CHANGE OF POWER OF ATTORNEY

This is in response to the Power of Attorney filed 09/03/2010.

- The withdrawal as attorney in this application has been accepted. Future correspondence will be mailed to the new address of record. 37 CFR 1.33.

/dcgoodwyn/

Office of Data Management, Application Assistance Unit (571) 272-4000, or (571) 272-4200, or 1-888-786-0101

UNITED STATES PATENT AND TRADEMARK OFFICE

Commissioner for Patents
United States Patent and Trademark Office
P.O. Box 1450
Alexandria, VA 22313-1450
www.uspto.gov

Albert L. Underhill
Underhill Law Office P.L.L.C.
7907 North 16th Drive
Phoenix, AZ 85021

MAILED
AUG 17 2011
OFFICE OF PETITIONS

In re Application of	:	
Jonna M. PURVIS, et al.	:	
Application No. 12/471,426	:	ON PETITION
Filed: May 25, 2009	:	
Attorney Docket No.	:	

This is in response to the petition under 37 CFR 1.183, filed November 22, 2010, on behalf of Jonna M. Purvis., requesting waiver of the requirements of 37 CFR 1.32(b)(4).

The petition is **GRANTED** to the extent indicated below.

Petitioner, Jonna M. Purvis, requests the USPTO to: (1) appoint Albert L. Underhill, Reg. No. 27,403 as her representative before the USPTO; and (2) waive the single signature requirements of Rule 1.32(b)(4) due to divergent interests in the subject matter of the instant application.

The application as filed named Jonna M. Purvis (Purvis) and Aline D. Richardson (Richardson) as inventors. Both of the inventors gave the attorneys associated with Customer No. 28,548. Inventorship is the starting point for determining ownership. *See University Patents, Inc. v. Kligman*, 762 F. Supp. 1212, 1218-19, 20 USPQ2d 1401, 1405 (E.D. Pa. 1991). Unless there is an assignment, the USPTO will presume the named inventor(s) to be the owner(s), see 37 CFR 3.73(a). The assignment records indicate at reel 024584 frame 0426 that Purvis assigned her rights to Ebarb L.T.D.., and at reel 025308 frame 0560 that Ebarb L.T.D. assigned their rights to Purvis. Thus, Purvis has one-half interest in the instant application and Richardson has a one-half interest in the instant application *See Ethicon, Inc. v. United States Surgical Corp.*, 135 F.3d 1456, 1465, 45 USPQ2d 1545, 1552 (Fed. Cir. 1998), *cert denied*, 525 U.S. 923 (1998). As such, Purvis does not own the entire interest in this application; rather Purvis. is but a *partial* assignee. But see 37 CFR 3.71(b)(2). However, only the owner of the *entire* interest in an application has the sole right to control prosecution of an application. *See In re Goldstein*, 16 USPQ2d 1963, 1964 (Comm'r Pat. 1988); see also *In re Scold*, 195 USPQ 335,336 (Comm'r Pat. 1976); *Ex parte Harrison*, 1925 Dec. Comm'r Pat. 122, 123 (Comm'r Pat. 1924). The procedures set forth in the regulations (*e.g.*, 37 CFR §§ 1.36, 3.71, and 3.73(b)) serve to assure

that papers filed with USPTO in an application or patent are submitted on behalf of the owner(s) of the *entire* interest in the application or patent. *See Goldstein*, 16 USPQ2d at 1964. Accordingly, it would also be contrary to intent of the regulations to permit *ex parte*, by waiver of the rules, to have either party unilaterally extinguish the property rights of the other in this application. Since Purvis and Richardson have divergent interests, no one side can reasonably expect or be permitted to control the prosecution of this application to the exclusion of the other(s).

In accordance with MPEP 402.10, the requested appointment of Albert L. Underhill, Reg. No. 27,403 to represent Purvis is **granted** as of the mail date of this decision.

In order to assure that all interests are properly and effectively represented, all further correspondence to the United States Patent and Trademark Office (USPTO) in this application – or resultant patent—must be signed by both: (1) Albert L. Underhill, Reg. No. 27,403 who represents Purvis.; and (2) applicant Richardson.. Any counsel when signing subsequent papers must indicate whom he or she represents. Albert L. Underhill, Reg. No. 27,403 will also be responsible for coordinating replies or submissions to the USPTO. See MPEP 402.10.

In view of the above decision, the correspondence address remains Albert L. Underhill, Reg. No. 27,403.

All parties are reminded that dual correspondence is not permitted, and will not be undertaken by the USPTO.

This application is being referred to Technology Center 3700. The Technology Center is advised that any communication filed on or after the mailing date of this decision not signed in accordance with this decision must also be regarded as informal, and as such, to take such action it deems appropriate.

Telephone inquiries concerning this decision should be directed to the undersigned at (571) 272-7099.

David Bucci
Petitions Examiner
Office of Petitions

Cc: Aline D. Richardson
1437 Eagle Ridge.
Prescott, AZ 86301

UNITED STATES PATENT AND TRADEMARK OFFICE

Commissioner for Patents
United States Patent and Trademark Office
P.O. Box 1450
Alexandria, VA 22313-1450
www.uspto.gov

DAVID A. DAGG, ESQ.
44 CHAPIN ROAD
NEWTON MA 02459

MAILED

JUN 14 2011

OFFICE OF PETITIONS

In re Application of	:	
Venguerov, Mark	:	
Application No. 12/471,436	:	ON PETITION
Filed: May 25, 2009	:	
Attorney Docket No. 500-006	:	

This is a decision on the petition under 37 C.F.R. § 1.137(b), filed April 25, 2011, to revive the above-identified application.

The petition is **GRANTED**.

The petition satisfies the requirements of 37 CFR 1.137(b) in that petitioner has supplied (1) the reply in the form of an Amendment and Terminal Disclaimer, (2) the petition fee of $1620.00, and (3) a proper statement of unintentional delay.

Telephone inquiries concerning this decision should be directed to the undersigned at (571) 272-3206.

This matter is being referred to Technology Center AU 2166 for further examination on the merits.

/Liana Walsh/
Liana Walsh
Petitions Examiner
Office of Petitions

UNITED STATES PATENT AND TRADEMARK OFFICE

Commissioner for Patents
United States Patent and Trademark Office
P.O. Box 1450
Alexandria, VA 22313-1450
www.uspto.gov

MAILED
AUG 02 2011
OFFICE OF PETITIONS

LAW OFFICE OF GLENN R. SMITH
28626 BROOKHILL ROAD
TRABUCO CANYON, CA 92679-1163

In re Application of
David Blachley
Application No. 12/471,458
Filed: May 25, 2009
Attorney Docket No. BLACHLEY.001C3

DECISION ON PETITION
TO WITHDRAW
FROM RECORD

This is a decision on the Request to Withdraw as attorney or agent under 37 C.F.R. § 1.36(b) filed July 11, 2011.

The request is **NOT APPROVED**.

The Office will no longer approve requests from practitioners to withdraw from application where the requesting practitioners is acting, or has acted, in a representative capacity pursuant to 37 CFR 1.34. In these situations, the practitioner is responsible for the correspondence the practitioner files in the application while acting in a representative capacity. As such, there is no need for the practitioner to obtain the Office's permission to withdraw from representation. However, practitioners acting in a representative capacity, like practitioners who have power of attorney in the application, remain responsible for noncompliance with 37 CFR 1.56, as well as 37 CFR 10.18, with respect to the documents they file.

A review of the file record indicates that Law Office of Glenn R. Smith does not have power of attorney in this patent application. See 37 C.F.R. § 10.40. Accordingly, the request to withdraw under 37 C.F.R. § 1.36(b) is not applicable.

All future communications from the Office will continue to be directed to the above-listed address until otherwise properly notified by the applicant.

There are no pending Office actions at the present time.

Telephone inquires concerning this decision should be directed to undersigned at 571-272-1642.

All other inquiries concerning the examination or status of this application should be directed to the Technology Center.

/AMW/
April M. Wise
Petitions Examiner
Office of Petitions

cc: DAVID BLACHLEY
2755 EAST HILL STREET
SIGNAL HILL, CA 90755-1009

UNITED STATES PATENT AND TRADEMARK OFFICE

Commissioner for Patents
United States Patent and Trademark Office
P.O. Box 1450
Alexandria, VA 22313-1450
www.uspto.gov

MAILED
MAY 17 2011
OFFICE OF PETITIONS

SMART & BIGGAR
P.O. BOX 2999, STATION D
900-55 METCALFE STREET
OTTAWA ON K1P 5Y6 CA CANADA

In re Patent No. 7,850,980	:	
Issue Date: December 14, 2010	:	
Application No. 12/471,513	:	DECISION ON PETITION
Filed: May 26, 2009	:	
Attorney Docket No. **77813-73F**	:	

This is a decision on the petition March 28, 2011, requesting issuance of a duplicate Letters Patent for the above-identified patent that is being considered under 37 CFR 1.182.

The petition under 37 CFR 1.182 is **GRANTED**.

The Office of Data Management is directed to issue duplicate Letters Patent.

As authorized, the $400 fee for the petition under 37 CFR 1.182 has been assessed to petitioner's deposit account.

A copy of this decision is being forwarded to the Office of Data Management for issuance of the duplicate Letters Patent.

Any questions concerning this matter may be directed to the undersigned at (571) 272-4584. Any questions concerning issuance of the duplicate Letters Patent should be directed to Ollie Person or Kimberly Terrell at the Office of Data Management (ODM) 571-272-4200.

JoAnne Burke
Petitions Examiner
Office of Petitions

cc: Ollie Person Office at FAX No. 571- 270-9764
Kimberly Terrell at FAX No. 571-270-9958

UNITED STATES PATENT AND TRADEMARK OFFICE

Commissioner for Patents
United States Patent and Trademark Office
P.O. Box 1450
Alexandria, VA 22313-1450
www.uspto.gov

Decision Date : December 27, 2011

In re Application of :

David Simons

Application No : 12471582

Filed : 26-May-2009

Attorney Docket No : 046185-0124

DECISION ON REQUEST TO WITHDRAW AS ATTORNEY/AGENTOF RECORD

This is an electronic decision on the Request to Withdraw as attorney or agent of record under 37 CFR § 1.36(b), filed December 27, 2011

The request is **APPROVED.**

The request was signed by Hunter, Paul (registration no. 44787) on behalf of all attorneys/agents associated with Customer Number 23524 . All attorneys/agents associated with Cusotmer Number 23524 have been withdrawn.

Since there are no remaining attorneys of record, all future communications from the Office will be directed to the first named inventor or assignee that has properly made itself of record pursuant to 37 CFR 3.71, with correspondence address:

Name	DOUBLE FUSION INC.
Name2	
Address 1	2434 MAIN STREET
Address 2	SUITE 202
City	Santa Monica
State	CA
Postal Code	90405
Country	US

As a reminder, requester is required to inform the first named inventor or assignee that has properly made itself of record pursuant to 37 CFR 3.71 of the electronically processed petition.

Telephone inquiries concerning this decision should be directed to the Patent Electronic Business Center (EBC) at 866-217-9197.

Office of Petitions

Doc Code: PET.AUTO **Document Description: Petition automatically granted by EFS-Web**	PTO/SB/83 U.S. Patent and Trademark Office Department of Commerce

Electronic Petition Request	**REQUEST FOR WITHDRAWAL AS ATTORNEY OR AGENT AND CHANGE OF CORRESPONDENCE ADDRESS**
Application Number	12471582
Filing Date	26-May-2009
First Named Inventor	David Simons
Art Unit	2192
Examiner Name	TUAN DAM
Attorney Docket Number	046185-0124
Title	ASSOCIATING ADVERTISEMENTS AND GAME DATA IN A FLASH-BASED GAMING ENVIRONMENT

◉ Please withdraw me as attorney or agent for the above identified patent application and the practitioners of record associated with Customer Number: 23524

The reason(s) for this request are those described in 37 CFR:

10.40(c)(1)(iv)

Certifications

☒ I/We have given reasonable notice to the client, prior to the expiration of the response period, that the practitioner(s) intend to withdraw from employment

☒ I/We have delivered to the client or a duly authorized representative of the client all papers and property (including funds) to which the client is entitled

☒ I/We have notified the client of any responses that may be due and the time frame within which the client must respond

Change the correspondence address and direct all future correspondence to the first named inventor or assignee that has properly made itself of record pursuant to 37 CFR 3.71:

Name	DOUBLE FUSION INC.
Address	2434 MAIN STREET SUITE 202
City	Santa Monica
State	CA
Postal Code	90405
Country	US

I am authorized to sign on behalf of myself and all withdrawing practitioners.	
Signature	/Hunter, Paul/
Name	Hunter, Paul
Registration Number	44787

UNITED STATES PATENT AND TRADEMARK OFFICE

Commissioner for Patents
United States Patent and Trademark Office
P.O. Box 1450
Alexandria, VA 22313-1450
www.uspto.gov

Patent No. : **8109660**
Ser. No. : **12/471622**
Inventor(s) : **HOCHSTEIN, PETER A.**
Issued : **02/07/2012**
Title : **GLOBE DEPLOYABLE LED LIGHT ASSEMBLY**
Docket No. : **650160-114**

Re: Request for Certificate of Correction

Consideration has been given your request for the issuance of a certificate of correction for the above-identified patent under the provisions of Rule(s) 1.322 and/or 1.323.

In regards to the alleged error(s) in the Column 1 Line 33 and Column 7 Line 63, the requested changes don't appear where indicated.

In view of the foregoing, your request, in this matter, is hereby denied.

A Certificate of Correction will be issued for the remaining errors.

Omega Lewis
For Mary Diggs
Decisions & Certificates
Of Correction Branch
(703)756-1575 or (703) 756-1814

Harold W. Milton, Jr.
2600 WEST BIG BEAVER ROAD, SUITE 300
TROY, MI 48084

OL

UNITED STATES PATENT AND TRADEMARK OFFICE

Commissioner for Patents
United States Patent and Trademark Office
P.O. Box 1450
Alexandria, VA 22313-1450
www.uspto.gov

JOAN I. NOREK
THE LAW OFFICE OF JOAN I. NOREK
25 E. Washington Street
Suite 1400
CHICAGO, IL 60602

MAILED
DEC 20 2010
OFFICE OF PETITIONS

In re Application of	:	
MOINUDDIN SARKER	:	DECISION ON PETITION
Application No. 12/471,717	:	TO WITHDRAW
Filed: May 26, 2009	:	FROM RECORD
Attorney Docket No. **6704-07**	:	

This is a decision on the request to withdraw as attorney of record under 37 CFR § 1.36(b), filed November 16, 2010.

The request is **NOT APPROVED** as moot.

A review of the file record indicates that the power of attorney to attorneys/agents associated with Customer Number has been revoked by the applicant of the patent application on November 22, 2010. Accordingly, the request to withdraw under 37 CFR § 1.36(b) is moot.

All future communications from the Office will continue to be directed to the above-listed address until otherwise notified by applicant.

Telephone inquiries concerning this decision should be directed to the undersigned at 571-272-4584.

/JoAnne Burke/
JoAnne Burke
Petitions Examiner
Office of Petitions

cc: CROWELL & MORING, L.L.P
Intellectual Property Group
P.O. Box 14300
Washington DC 20044-4300

UNITED STATES PATENT AND TRADEMARK OFFICE

Commissioner for Patents
United States Patent and Trademark Office
P.O. Box 1450
Alexandria, VA 22313-1450
www.uspto.gov

SMITH HOPEN, PA
180 PINE AVENUE NORTH
OLDSMAR FL 34677

MAILED

AUG 13 2010

OFFICE OF PETITIONS

In re Application of
James E. Goff
Application No. 12/471,777
Filed: May 26, 2009
Attorney Docket No: **1308.09**

: DECISION ON PETITION

This is a decision on the renewed petition, filed June 28, 2010 under 37 CFR 1.137(b) to revive the instant nonprovisional application for failure to timely notify the U.S. Patent and Trademark (USPTO) of the filing of an application in a foreign country, or under a multinational treaty that requires publication of applications eighteen months after filing. *See* 37 CFR 1.137(f).

The petition is **GRANTED**.

Petitioner states that the present nonprovisional application is the subject of a foreign or international application filed on February 10, 2010. However, the U.S. Patent and Trademark Office was unintentionally not notified of this filing within 45 days subsequent to the filing of the subject application in a foreign country.

In view of the above, this application became abandoned pursuant to 35 U.S.C. § 122(b)(2)(B)(iii) and 37 CFR 1.213(c) for failure to timely notify the Office of the filing of an application in a foreign country, or under a multilateral international agreement, that requires publication of applications 18 months after filing.

A petition under 37 CFR 1.137(f) must be accompanied by:

(1) the reply which is met by the notification of such filing in a foreign country or under a multinational treaty;

(2) the petition fee as set forth in 37 CFR 1.17(m); and

(3) a statement that the entire delay in filing the required reply from the due date of the reply until the filing of a grantable petition was unintentional.

The present petition has been found to be in compliance with 37 CFR 1.137(f).

Accordingly, the failure to timely notify the Office of a foreign or international filing within 45 days after the date of filing of such foreign or international application as provided by 35 U.S.C. § 122(b)(2)(B)(I) has been rescinded. The projected publication date is December 2, 2010. A review of the record reveals that a copy of the communication regarding rescission was previously mailed on April 13, 2010.

The petition fee in the amount of $810.00 has been applied to the finance records for this application.

This matter is being referred to Technology Center 3772 for examination in due course.

Telephone inquiries related to this decision should be directed to the undersigned Petitions Attorney at (571) 272-3212.

Patricia Faison-Ball

Patricia Faison-Ball
Senior Petitions Attorney
Office of Petitions

ATTACHMENT: Duplicate Communication Regarding Rescission of Nonpublication Request And/or Notice of Foreign Filing

UNITED STATES PATENT AND TRADEMARK OFFICE

UNITED STATES DEPARTMENT OF COMMERCE
United States Patent and Trademark Office
Address: COMMISSIONER FOR PATENTS
P.O. Box 1450
Alexandria, Virginia 22313-1450
www.uspto.gov

APPLICATION NUMBER	FILING OR 371(C) DATE	FIRST NAMED APPLICANT	ATTY. DOCKET NO./TITLE
12/471,777	05/26/2009	James E. Goff	1308.09

CONFIRMATION NO. 6503

21901
SMITH HOPEN, PA
180 PINE AVENUE NORTH
OLDSMAR, FL 34677

NONPUBLICATION RESCISSION LETTER

OC000000041039161

Date Mailed: 04/13/2010

Communication Regarding Rescission Of Nonpublication Request and/or Notice of Foreign Filing

Applicant's rescission of the previously-filed nonpublication request and/or notice of foreign filing is acknowledged. The paper has been reflected in the Patent and Trademark Office's (USPTO's) computer records so that the earliest possible projected publication date can be assigned.

The projected publication date is 12/02/2010.

If applicant rescinded the nonpublication request before or on the date of "foreign filing,"[1] then no notice of foreign filing is required.

If applicant foreign filed the application after filing the above application and before filing the rescission, and the rescission did not also include a notice of foreign filing, then a notice of foreign filing (not merely a rescission) is required to be filed within 45 days of the date of foreign filing. See 35 U.S.C. § 122(b)(2)(B)(iii), and Clarification of the United States Patent and Trademark Office's Interpretation of the Provisions of 35 U.S.C. § 122(b)(2)(B)(ii)-(iv), 1272 Off. Gaz. Pat. Office 22 (July 1, 2003).

If a notice of foreign filing is required and is not filed within 45 days of the date of foreign filing, then the application becomes abandoned pursuant to 35 U.S.C. § 122(b)(2)(B)(iii). In this situation, applicant should either file a petition to revive or notify the Office that the application is abandoned. See 37 CFR 1.137(f). Any such petition to revive will be forwarded to the Office of Petitions for a decision. Note that the filing of the petition will not operate to stay any period of reply that may be running against the application.

Questions regarding petitions to revive should be directed to the Office of Petitions at (571) 272-3282.

[1] Note, for purpose of this notice, that "foreign filing" means "filing an application directed to the same invention in another country, or under a multilateral international agreement, that requires publication of applications 18 months after filing".

/llam/

Office of Data Management, Application Assistance Unit (571) 272-4000, or (571) 272-4200, or 1-888-786-0101

UNITED STATES PATENT AND TRADEMARK OFFICE

UNITED STATES DEPARTMENT OF COMMERCE
United States Patent and Trademark Office
Address: COMMISSIONER FOR PATENTS
P.O. Box 1450
Alexandria, Virginia 22313-1450
www.uspto.gov

APPLICATION NO.	FILING DATE	FIRST NAMED INVENTOR	ATTORNEY DOCKET NO.	CONFIRMATION NO.
12/471,795	05/26/2009	Yutaka ISHIWATA	342501US2	6533

7590 02/17/2011
OBLON, SPIVAK, MCCLELLAND MAIER & NEUSTADT, L.L.P.
1940 DUKE STREET
ALEXANDRIA, VA 22314

EXAMINER
MAYE, AYUB A

ART UNIT	PAPER NUMBER
3742	

NOTIFICATION DATE	DELIVERY MODE
02/17/2011	ELECTRONIC

DECISION GRANTING PETITION UNDER 37 CFR 1.138(d)

The declaration of express abandonment is recognized

This is in response to the petition under 37 CFR 1.138(d), requesting for a refund of any previously paid search fee and excess claims fee in the above-identified application.

The petition is granted.

The express abandonment is recognized. Any previously paid search fee and excess claims fee are hereby refunded.

Telephone inquiries should be directed to the Office of Data Management at (571) 272-4200.

Mimi Jarmes

Patent Publication Branch
Office of Data Management

Doc Code: PET.GREEN
Document Description: Petition for Green Tech Pilot

PTO/SB/420 (11-10)
Approved for use through 01/31/2011. OMB 0651-0062
U.S. Patent and Trademark Office; U. S. DEPARTMENT OF COMMERCE
Under the Paperwork Reduction Act of 1995, no persons are required to respond to a collection of information unless it displays a valid OMB control number.

PETITION TO MAKE SPECIAL UNDER THE GREEN TECHNOLOGY PILOT PROGRAM

Attorney Docket Number: 81194159 (FGTI-155PUS)	Application Number (if known): 12/471,809	Filing date: 12/471,809
First Named Inventor: Zhang		
Title: DIESEL PARTICULATE FILTER		

APPLICANT HEREBY REQUESTS TO PARTICIPATE IN THE GREEN TECHNOLOGY PILOT PROGRAM FOR THE ABOVE-IDENTIFIED APPLICATION. See Instruction Sheet on page 2.

This petition must be timely filed electronically using the USPTO electronic filing system, EFS-Web.

1. By filing this petition:

   Applicant is requesting early publication: Applicant hereby requests early publication under 37 CFR 1.219 and the publication fee set forth in 37 CFR 1.18(d) accompanies this request.

2. By filing this petition: applicant is agreeing to make an election without traverse in a telephonic interview and elect an invention that meets the eligibility requirements for the Green Technology Pilot Program, if the Office determines that the claims are not obviously directed to a single invention. See Instruction Sheet.

3. This request is accompanied by statements of special status for the eligibility requirement.

4. The application contains no more than three (3) independent claims and twenty (20) total claims.

5. The application does not contain any multiple dependent claims.

6. Other attachments: _____

Signature	Date 2-28-2011
Name (Print/Typed) Richard M. Sharkansky	Registration Number 25800

Note: *Signatures of all the inventors or assignees of record of the entire interest or their representative(s) are required in accordance with 37 CFR 1.33 and 11.18. Please see 37 CFR 1.4(d) for the form of the signature. If necessary, submit multiple forms for more than one signature see below*.*

*Total of forms are submitted.

The information is required to obtain or retain a benefit by the public which is to file (and by the USPTO to process) an application. Confidentiality is governed by 35 U.S.C. 122 and 37 CFR 1.11 and 1.14. This collection is estimated to take 12 hours to complete, including gathering, preparing, and submitting the completed application form to the USPTO. Time will vary depending upon the individual case. Any comments on the amount of time you require to complete this form and/or suggestions for reducing this burden, should be sent to the Chief Information Officer, U.S. Patent and Trademark Office, U.S. Department of Commerce, P.O. Box 1450, Alexandria, VA 22313-1450. DO NOT SEND FEES OR COMPLETED FORMS TO THIS ADDRESS. **SEND TO: Commissioner for Patents, P.O. Box 1450, Alexandria, VA 22313-1450.**

If you need assistance in completing the form, call 1-800-PTO-9199 and select option 2.

PATENT

IN THE UNITED STATES PATENT AND TRADEMARK OFFICE

Appl. No.	:	12/469,709	Confirmation No.: 2441
Applicant	:	Lin et al.	
Filed	:	May 5, 2009	
T.C./A.U.	:		
Examiner	:		
Docket No.	:	81194138 (FGTI-154PUS)	
Customer No.	:	33036	

Commissioner for Patents
P.O. Box 1450
Alexandria, VA 22313-1450

STATEMENTS OF SPECIAL STATUS

Applicants respectfully request consideration of the following statement concerning the basis for the special status as well as the following statement pertaining to the materiality standard.

I. Statement concerning the basis for special status.

Applicants submit that special status is sought on the following bases: the claimed invention materially contributes to greenhouse gas emission reduction; and/or the claimed invention materially enhances the quality of the environment.

II. Statement pertaining to the materiality standard.

This disclosure generally to exhaust gas treatment systems and more particularly to diesel particulate filters used in such systems.

As is known in the art, most current diesel exhaust gas treatment systems today include a DOC (Diesel Oxidation Catalyst) followed by a DPF (Diesel Particulate Filter). The DPF includes a substrate (sometimes referred to as a substrate brick or brick) with the outlet end closed on the inlet channel and the inlet end closed on the outlet channel. Exhaust gas flows through the inlet channel, crosses the wall of cells, and then exits through the outlet channel. The particles are filtrated in the inlet channel.

As is also known in the art, particulate filters are used in the exhaust systems of

internal combustion engines, especially diesel engines, (diesel particulate filters or DPF) to trap and remove particulate matter which is primarily formed of carbon based material. As the engine exhaust passes through the DPF, the particulates are trapped in the filter and accumulate over time. This leads to an increase in the resistance of the exhaust gas flow through the DPF, and therefore, to an increase in the backpressure on the engine. This increase in backpressure has an adverse effect on engine operation, and especially on fuel consumption. In order to reduce backpressure to acceptable levels, the DPF is periodically regenerated by burning off the accumulated particulates, most of which are combustible.

As is also known in the art, a traditional cordierite or SiC DPF system needs to under going a regeneration process to burn out soot collected on the DPF wall surface. A few problems are associated with this procedure: 1. A fuel penalty because diesel fuel is injected either through post injection or down pipe injection to generate high exhaust temperature. Usually fuel penalty is in the range of 3 to 5 %; 2. Unevenly distributed soot resulted from poor flow uniformity will lead to high temperature gradient inside DPF substrate, and cause durability issue such as ring-off-crack failure; and 3. Very low or even negative NOx conversion efficiency is found during DPF regeneration, usually takes more than 10 minutes. This is becoming an issue for level III emission requirements.

In accordance with the present disclosure, a diesel particulate filter assembly is provided having: a housing and a filter structure disposed within the housing for trapping particulate material in received exhaust gas as such received exhaust gas passes through the housing along a longitudinal axis of the housing. The filter structure has walls of particulate collecting, gas passing material; such walls passing portions of the exhaust gas while trapping particulate material in such passing exhaust gas. The walls are disposed oblique to the direction of the received exhaust gas.

In one embodiment, a diesel particulate filter assembly is provided having a housing and a filter structure disposed within the housing for trapping particulate material in received exhaust gas as such received exhaust gas passes through the housing along a longitudinal axis of the housing. The filter structure forms a plurality of channels separated by walls of particulate collecting, gas passing material. The walls pass portions of the exhaust gas from

one of the channels to another adjacent one of the channels while trapping particulate material in such passing exhaust gas. The walls are disposed oblique to the direction of the received exhaust gas.

In one embodiment, a diesel particulate filter assembly is provided having a housing having an inlet for receiving an inlet flow of exhaust gas from a diesel engine and a filter structure disposed within the housing. The filter structure is provided for trapping particulate material in the received exhaust gas as such received exhaust gas passes in an outlet flow through an outlet of the housing with the inlet flow and the outlet flow being disposed along a longitudinal axis of the housing. The filter structure forms a plurality of channels for passing portions of the received exhaust gas, such channels being separated by porous walls of particulate collecting, gas passing material, such walls passing portions of the exhaust gas from one of the channels to another adjacent one of the channels while trapping particulate material in such passing exhaust gas. The separating walls of each one of such channels is disposed oblique to the direction of the received exhaust gas.

In one embodiment, the channels have an inlet channel section and an outlet channel section, the inlet channel section being upstream of the outlet channel section.

In one embodiment, the assembly has a main channel in addition to the plurality of channels, such main channel being disposed between an inner wall of the housing and the filter structure.

In one embodiment, the particulate collecting, gas-passing material is paper.

In one embodiment the filter structure is removable mounted within the housing.

As sdet forth in claim 1, diesel particulate filter assembly, comprisies:

a housing;

a filter structure disposed within the housing for trapping particulate material in received exhaust gas as such received exhaust gas passes through the housing along a longitudinal axis of the housing, such filter structure having walls of particulate collecting, gas passing material, such walls passing portions of the exhaust gas while trapping particulate material in such passing exhaust gas, the walls being disposed oblique to the direction of the received exhaust gas.

As set forth in claim 2, a diesel particulate filter assembly, comprises:

a housing;

a filter structure disposed within the housing for trapping particulate material in received exhaust gas as such received exhaust gas passes through the housing along a longitudinal axis of the housing, such filter structure forming a plurality of channels separated by walls of particulate collecting, gas passing material, such walls passing portions of the exhaust gas from one of the channels to another adjacent one of the channels while trapping particulate material in such passing exhaust gas, the walls being disposed oblique to the direction of the received exhaust gas.

As set forth in claim 3, diesel particulate filter assembly, comprises:

a housing having an inlet for receiving an inlet flow of exhaust gas from a diesel engine;

a filter structure disposed within the housing for trapping particulate material in the received exhaust gas as such received exhaust gas passes in an outlet flow through an outlet of the housing with the inlet flow and the outlet flow being disposed along a longitudinal axis of the housing, such filter structure forming a plurality of channels for passing portions of the received exhaust gas, such channels being separated by porous walls of particulate collecting, gas passing material, such walls passing portions of the exhaust gas from one of the channels to another adjacent one of the channels while trapping particulate material in such passing exhaust gas, the separating walls of each one of such channels the walls being disposed oblique to the direction of the received exhaust gas.

Please charge any cost incurred in this filing, along with any other costs, to Deposit Account No. 06-1510. In the event any additional fee is required, please charge such amount to Patent and Trademark Office Deposit Account No. 06-1510.

Respectfully submitted,

February 28, 2011 /richard sharkansky/

Date

Richard M. Sharkansky
Attorney for Applicant(s)
Reg. No.: 25,800

114 Tide Run
Mashpee, MA 02649
Telephone: (508) 477-4311
Facsimile: (508) 477-7234

UNITED STATES PATENT AND TRADEMARK OFFICE

UNITED STATES DEPARTMENT OF COMMERCE
United States Patent and Trademark Office
Address: COMMISSIONER FOR PATENTS
P.O. Box 1450
Alexandria, Virginia 22313-1450
www.uspto.gov

APPLICATION NO.	FILING DATE	FIRST NAMED INVENTOR	ATTORNEY DOCKET NO.	CONFIRMATION NO.
12/471,809	05/26/2009	Xiaogang Zhang	81194159 (FGTI-155PUS)	6555

33066 7590 03/07/2011
RICHARD M. SHARKANSKY
114 TIDE RUN
MASHPEE, MA 02649

EXAMINER

ART UNIT	PAPER NUMBER
3748	

MAIL DATE	DELIVERY MODE
03/07/2011	PAPER

Please find below and/or attached an Office communication concerning this application or proceeding.

The time period for reply, if any, is set in the attached communication.

UNITED STATES PATENT AND TRADEMARK OFFICE

Commissioner for Patents
United States Patent and Trademark Office
P.O. Box 1450
Alexandria, VA 22313-1450
www.uspto.gov

RICHARD M. SHARKANSKY
114 TIDE RUN
MASHPEE MA 02649

In re Application of	:	
ZHANG, XIAOGANG	:	DECISION ON PETITION
Application No. 12/471,809	:	TO MAKE SPECIAL UNDER
Filed: May 26, 2009	:	THE GREEN TECHNOLOGY
Attorney Docket No. 81194159 (FGTI-155PUS)	:	PILOT PROGRAM

This is a decision on the petition under 37 CFR 1.102, filed Feb. 28, 2011, to make the above-identified application special under the pilot program for applications pertaining to Green Technologies as set forth in 74 Federal Register Notice 64666 (December 8, 2009) and amended by 75 Federal Register Notice 28554 (May 21, 2010) and 75 Federal Register Notice 69049 (November 10, 2010).

The petition is **DISMISSED**.

If reconsideration of this decision is desired, a petition for reconsideration must be filed within ONE (1) MONTH OR THIRTY (30) DAYS from the mail date of this decision, whichever is longer. No extension of this time limit can be granted under 37 CFR 1.136(a) or (b). The petition for reconsideration should include an exhaustive attempt to provide the lacking item(s) noted below, since, after a decision on the petition for reconsideration, no further reconsideration or review of the matter will be undertaken by the Director.

A grantable petition to make an application special under 37 CFR 1.102 and the pilot program as set forth in 74 FR 64666 must be directed to a nonprovisional application filed under 35 USC 111(a) or be a national stage entry under 35 USC 371, exclusive of any reissue applications.

In order to qualify for special status, the following requirements must be met. 1) The application must have no more than 3 independent claims and no more than 20 total claims. 2) The application must not contain any multiple dependent claims. 3) The petition must state the basis for seeking special status, i.e., the claimed invention either: A) materially enhances the quality of the environment or B) materially contributes to: i) the discovery or development of renewable energy resources, ii) the more efficient utilization and conservation of energy resources, or iii) greenhouse gas emission reduction. 4) If the disclosure is not clear on its face that the claimed invention materially contributes under category (A) or (B), the petition must be accompanied by a statement by the applicant, assignee, or an attorney/agent registered to practice before the

Office explaining how the materiality standard is met. 5) A statement that applicant will agree to make an election without traverse in a telephonic interview if a restriction requirement is made by the examiner. 6) The petition to make special must be filed electronically. 7) The petition must be filed at least one day prior to the date that a first Office Action appears in the Patent Application Information Retrieval (PAIR) system. 8) The petition must be accompanied by a request for early publication in compliance with 37 CFR 1.219 and include the publication fee as set forth in 37 CFR 1.18(d). The requirement for a fee for consideration of the petition to make special for applications pertaining to Green Technologies has been waived.

The petition lacks items #4 and # 8.

In regard to item 4, petitioner should note that the instant petition includes a statement identifying the basis for the special status (i.e., whether the instant invention (1) materially enhances the quality of the environment or materially contributes to (2) development of renewable energy resources or energy conservation, or (3) greenhouse gas reduction) as required by sections II and III of the notice. However, as stated in the notice, applicant must also provide a statement pertaining to the materiality standard if the application disclosure is not clear on its face as to the materiality of the basis for the special status of the invention. This petition lacks such a statement and it is not agreed that the application on its face meets that materiality standard. In the petition, petitioner states that the claims of the application are directed to the enhancement of the quality of the environment and reduction of greenhouse gas. This is not persuasive because it is not clear the claimed obliquely arranged filter walls will provide and enhance the quality of the environment or contribute to development of renewable energy resources or energy conservation or greenhouse gas reduction. The claimed filter appears to be a conventional exhaust gas filter.

In regard to item 8, petitioner should note that since no request in compliance with 37 CFR 1.219 has been made for the early publication of the present application and the publication fee $300.00 as set forth in 37 CFR 1.18(d) has not been received, the petition is dismissed.

Any reconsideration of this decision should be submitted through the USPTO electronic filing system, EFS-Web, and selecting the document description of "Petition for Green Tech Pilot" on the EFS-Web screen.

Telephone inquiries concerning this decision should be directed to Henry C. Yuen at 571-272-4856. This application will be forwarded to the Technology Center Art Unit 3753 for action in its regular turn.

/Henry C. Yuen/

Henry C. Yuen
Quality Assurance Specialist
Technology Center 3700

PATENT

IN THE UNITED STATES PATENT AND TRADEMARK OFFICE

Appl. No.	:	12/471,809	Confirmation No.: 6555
Applicant	:	Zhang	
Filed	:	05/26/2009	
T.C./A.U.	:	3748	
Examiner	:		
Docket No.	:	81194159 (FGTI-155PUS)	
Customer No.	:	33036	

Commissioner for Patents
P.O. Box 1450
Alexandria, VA 22313-1450

REQUEST FOR RECONSIDERATION ON DISMISSAL OF PETITION FOR SPECIAL STATUS

Applicant respectfully request reconsideration of the dismissal of the petition for special status.

The petition was dismissed for the following reasons:

The petition lacks items #4 and # 8.

With regard to item #8, Applicant hereby requests, under 37 CFR 1.219, early publication of the present application and the hereby authorizes the amount of $300., or any additional fee required for this petition, to be charge Patent and Trademark Office Deposit Account No. 06-1510. In this regard the application has already been published. It is further noted that the original petition included it is to be noted that the request for early publication was included in a statement in the original petition (on the form accompanying the petition) and also included at the end of the written portion of the petition the following statesmen:

> Please charge any cost incurred in this filing, along with any other costs, to Deposit Account No. 06-1510. In the event any additional fee is required, please charge such amount to Patent and Trademark Office Deposit Account No. 06-1510.

With regard to item #4, the petition was dismissed because:

> This is not persuasive because it is not clear the claimed obliquely arranged filter walls will provide and enhance the quality of the environment

> or contribute to development of renewable energy resources or energy conservation or greenhouse gas reduction. The claimed filter appears to be a conventional exhaust gas filter.

First, it is respectfully requested that evidence be presented that the " claimed filter appears to be a conventional exhaust gas filter" so that the Applicant can provide such evidence that the claimed filter is "conventional" to the Examiner.

Second, the claimed filter (DPF) reduces diesel particulates and therefore reduces emissions and improves the environment. That is the purpose of a DPF. The reasons for the dismissal are therefore not understood and reconsideration is hereby requested.

As is also known in the art, a traditional cordierite or SiC DPF system needs to under going a regeneration process to burn out soot collected on the DPF wall surface. A few problems are associated with this procedure: 1. A fuel penalty because diesel fuel is injected either through post injection or down pipe injection to generate high exhaust temperature. Usually fuel penalty is in the range of 3 to 5 %; 2. Unevenly distributed soot resulted from poor flow uniformity will lead to high temperature gradient inside DPF substrate, and cause durability issue such as ring-off-crack failure; and 3. Very low or even negative NOx conversion efficiency is found during DPF regeneration, usually takes more than 10 minutes. This is becoming an issue for level III emission requirements.

In accordance with the present disclosure, a diesel particulate filter assembly solves these problems. Further, as described in one embodiment having the oblique wails, for 0.2m(height) x0.25m(width) filter with 100 folders (channels) Total surface area will be: 100X0.2X0.25=5 m^2, the porosity of fiber paper can be larger than 80 %, DPF trap efficiency can reach 99.9% with much lower pressure loss than traditional DPF.

Please charge any cost incurred in this filing, along with any other costs, to Deposit Account No. 06-1510. In the event any additional fee is required, please charge such amount to Patent and Trademark Office Deposit Account No. 06-1510.

Respectfully submitted,

March 18, 2011 /richard sharkansky/

Date

Richard M. Sharkansky
Attorney for Applicant(s)
Reg. No.: 25,800
114 Tide Run
Mashpee, MA 02649
Telephone: (508) 477-4311
Facsimile: (508) 477-7234

UNITED STATES PATENT AND TRADEMARK OFFICE

UNITED STATES DEPARTMENT OF COMMERCE
United States Patent and Trademark Office
Address: COMMISSIONER FOR PATENTS
P.O. Box 1450
Alexandria, Virginia 22313-1450
www.uspto.gov

APPLICATION NO.	FILING DATE	FIRST NAMED INVENTOR	ATTORNEY DOCKET NO.	CONFIRMATION NO.
12/471,809	05/26/2009	Xiaogang Zhang	81194159 (FGTI-155PUS)	6555

33066 7590 05/03/2011
RICHARD M. SHARKANSKY
114 TIDE RUN
MASHPEE, MA 02649

EXAMINER
ORLANDO, AMBER ROSE

ART UNIT	PAPER NUMBER
1776	

MAIL DATE	DELIVERY MODE
05/03/2011	PAPER

Please find below and/or attached an Office communication concerning this application or proceeding.

The time period for reply, if any, is set in the attached communication.

UNITED STATES PATENT AND TRADEMARK OFFICE

Commissioner for Patents
United States Patent and Trademark Office
P.O. Box 1450
Alexandria, VA 22313-1450
www.uspto.gov

RICHARD M. SHARKANSKY
114 TIDE RUN
MASHPEE MA 02649

5/3/11

In re Application of	:	
Zhang	:	DECISION ON PETITION
Application No. 12/471,809	:	TO MAKE SPECIAL UNDER
Filed: 5/26/2009	:	THE GREEN TECHNOLOGY
Attorney Docket No. **81194159 (FGTI-155PUS)**	:	PILOT PROGRAM

This is a decision on the petition under 37 CFR 1.102, filed 3/18/2011, to make the above-identified application special under the pilot program for applications pertaining to Green Technologies as set forth in 74 Federal Register Notice 64666 (December 8, 2009) and amended by 75 Federal Register Notice 28554 (May 21, 2010) and 75 Federal Register Notice 69049 (November 10, 2010).

The petition is **GRANTED**.

A grantable petition to make an application special under 37 CFR 1.102 and the pilot program as set forth in 74 FR 64666 must be directed to a nonprovisional application filed under 35 USC 111(a) or be a national stage entry under 35 USC 371, exclusive of any reissue applications.

In order to qualify for special status, the following requirements must be met. 1) The application must have no more than 3 independent claims and no more than 20 total claims. 2) The application must not contain any multiple dependent claims. 3) The petition must state the basis for seeking special status, i.e., the claimed invention either: A) materially enhances the quality of the environment or B) materially contributes to: i) the discovery or development of renewable energy resources, ii) the more efficient utilization and conservation of energy resources, or iii) greenhouse gas emission reduction. 4) If the disclosure is not clear on its face that the claimed invention materially contributes under category (A) or (B), the petition must be accompanied by a statement by the applicant, assignee, or an attorney/agent registered to practice before the Office explaining how the materiality standard is met. 5) A statement that applicant will agree to make an election without traverse in a telephonic interview if a restriction requirement is made by the examiner. 6) The petition to make special must be filed electronically. 7) The petition must be filed at least one day prior to the date that a first Office Action appears in the Patent Application Information Retrieval (PAIR) system. 8) The petition must be accompanied by a request for early publication in compliance with 37 CFR 1.219 and include the publication fee as set forth in 37 CFR 1.18(d).

The requirement for a fee for consideration of the petition to make special for applications pertaining to Green Technologies has been waived.

The instant petition complies with items 1 – 8 above. Accordingly, the above-identified application has been accorded "special" status.

Telephone inquires concerning this decision should be directed to Tom Dunn at 571-272-1171.

The application is being forwarded to the Technology Center Art Unit 1776 for action on the merits commensurate with this decision.

/Tom Dunn/

Tom Dunn
Quality Assurance Specialist
Technology Center 1700

UNITED STATES PATENT AND TRADEMARK OFFICE

Commissioner for Patents
United States Patent and Trademark Office
P.O. Box 1450
Alexandria, VA 22313-1450
www.uspto.gov

HOLME ROBERTS & OWEN, LLP
299 SOUTH MAIN
SUITE 1800
SALT LAKE CITY, UT 84111

MAILED

AUG 24 2010

OFFICE OF PETITIONS

In re Application of :
David Acosta :
Application No. 12/471,871 : ON PETITION
Filed: May 26, 2009 :
Attorney Docket No. 54545-10000 :

This is a decision on the renewed petition under 37 CFR 1.137(b) filed July 11, 2010, to withdraw the holding of abandonment in the above-identified application.

In response to decision mailed on May 24, 2010, petitioner submits the present petition under 37 CFR 1.137(b) along with the $810 petition fee.

The petition satisfies the requirements of 37 CFR 1.137(b) in that petitioner has supplied (1) the reply in the form of fourteen (14) sheets of replacement drawings containing Figures 1-14; (2) the petition fee of $810; and (3) a proper statement of unintentional delay. Therefore, the petition is **GRANTED**.

This application file is being referred to the Office of Patent Application Processing for further processing in accordance with this decision.

Telephone inquiries concerning this decision should be directed to the undersigned at (571) 272-3226.

Andrea Smith
Petitions Examiner
Office of Petitions

Doc Code: PET.AUTO Document Description: Petition automatically granted by EFS-Web	PTO/SB/140 U.S. Patent and Trademark Office Department of Commerce

Electronic Petition Request	**PETITION TO WITHDRAW AN APPLICATION FROM ISSUE AFTER PAYMENT OF THE ISSUE FEE UNDER 37 CFR 1.313(c)**
Application Number	12471904
Filing Date	26-May-2009
First Named Inventor	Mark Wisecarver
Art Unit	3782
Examiner Name	GARY ELKINS
Attorney Docket Number	IPK-041698-US
Title	BULK SHIPPING CONTAINER

An application may be withdrawn from issue for further action upon petition by the applicant. To request that the Office withdraw an application from issue, applicant must file a petition under this section including the fee set forth in § 1.17(h) and a showing of good and sufficient reasons why withdrawal of the application from issue is necessary.

APPLICANT HEREBY PETITIONS TO WITHDRAW THIS APPLICATION FROM ISSUE UNDER 37 CFR 1.313(c).

A grantable petition requires the following items:
(1) Petition fee; and
(2) One of the following reasons:
(a) Unpatentability of one or more claims, which must be accompanied by an unequivocal statement that one or more claims are unpatentable, an amendment to such claim or claims, and an explanation as to how the amendment causes such claim or claims to be patentable;
(b) Consideration of a request for continued examination in compliance with § 1.114 (for a utility or plant application only); or
(c) Express abandonment of the application. Such express abandonment may be in favor of a continuing application, but not a CPA under 37 CFR 1.53(d).

Petition Fee

☐ Applicant claims SMALL ENTITY status. See 37 CFR 1.27.

☐ Applicant is no longer claiming SMALL ENTITY status. See 37 CFR 1.27(g)(2).

☐ Applicant(s) status remains as SMALL ENTITY.

☒ Applicant(s) status remains as other than SMALL ENTITY

Reason for withdrawal from issue

○ One or more claims are unpatentable

◉ Consideration of a request for continued examination (RCE) (List of Required Documents and Fees)

○ Applicant hereby expressly abandons the instant application (any attorney/agent signing for this reason must have power of attorney pursuant to 37 CFR 1.32(b)).

RCE request,submission, and fee.

☐ I certify, in accordance with 37 CFR 1.4(d)(4) that : The RCE request ,submission, and fee have already been filed in the above-identified application on

☒ Are attached.

THIS PORTION MUST BE COMPLETED BY THE SIGNATORY OR SIGNATORIES

I certify, in accordance with 37 CFR 1.4(d)(4) that I am:

◉ An attorney or agent registered to practice before the Patent and Trademark Office who has been given power of attorney in this application.

○ An attorney or agent registered to practice before the Patent and Trademark Office, acting in a representative capacity.

○ A sole inventor

○ A joint inventor; I certify that I am authorized to sign this submission on behalf of all of the inventors

○ A joint inventor; all of whom are signing this e-petition

○ The assignee of record of the entire interest that has properly made itself of record pursuant to 37 CFR 3.71

Signature	/Matthew M. Eslami/
Name	Matthew M. Eslami
Registration Number	45488

UNITED STATES PATENT AND TRADEMARK OFFICE

Commissioner for Patents
United States Patent and Trademark Office
P.O. Box 1450
Alexandria, VA 22313-1450
www.uspto.gov

Decision Date : November 17,2011

In re Application of :

Mark Wisecarver

DECISION ON PETITION

UNDER CFR 1.313(c)(2)

Application No : 12471904

Filed : 26-May-2009

Attorney Docket No : IPK-041698-US

This is an electronic decision on the petition under 37 CFR 1.313(c)(2), filed November 17,2011 to withdraw the above-identified application from issue after payment of the issue fee.

The petition is **GRANTED.**

The above-identified application is withdrawn from issue for consideration of a submission under 37 CFR 1.114 (request for continued examination). See 37 CFR 1.313(c)(2).

Petitioner is advised that the issue fee paid in this application cannot be refunded. If, however, this application is again allowed, petitioner may request that it be applied towards the issue fee required by the new Notice of Allowance.

Telephone inquiries concerning this decision should be directed to the Patent Electronic Business Center (EBC) at 866-217-9197.

This application file is being referred to Technology Center AU 3782 for processing of the request for continuing examination under 37 CFR 1.114 .

Office of Petitions

UNITED STATES PATENT AND TRADEMARK OFFICE

Commissioner for Patents
United States Patent and Trademark Office
P.O. Box 1450
Alexandria, VA 22313-1450
www.uspto.gov

RABIN & Berdo, PC
1101 14TH STREET, NW
SUITE 500
WASHINGTON DC 20005

MAILED

AUG 30 2011

OFFICE OF PETITIONS

In re Application of	:	
Nobuyuki Nakamura, et al.	:	
Application No. 12/471,955	:	DECISION ON PETITION
Filed: May 26, 2009	:	
Attorney Docket No. OKI-548	:	

This is a decision on the petition, filed July 21, 2011, which is being treated as a petition under 37 CFR 1.181 (no fee), requesting withdrawal of the holding of abandonment in the above-identified application.

The petition is **GRANTED**.

This application was held abandoned for failure to timely respond to the Office action of December 9, 2010, which set a three (3) month shortened statutory period for reply. A reply was due on or before March 9, 2011. A Notice of abandonment was mailed July 20, 2011.

Petitioner states that a reply was in fact timely filed. To support this assertion, petitioner has submitted a copy of a return postcard which acknowledges receipt by the U.S. Patent and Trademark Office (USPTO) on March 9, 2011 of, *inter alia,* post card stamp from USPTO. A copy of the previously submitted reply accompanies the petition.

The post card acknowledged as having been received in the USPTO on March 9, 2011 is not of record in the application file and has not to date been located. However, MPEP 503 states that "[a] post card receipt which itemizes and properly identifies the papers which are being filed serves as *prima facie* evidence of receipt in the USPTO of all the items listed thereon on the date stamped thereon by the USPTO." Accordingly, it is concluded that the amendment was timely received in the USPTO but lost after receipt thereof.

In view of the above, the holding of abandonment is hereby withdrawn and the application restored to pending status.

The copy of the reply supplied with the petition will be accepted in place of the reply shown to have been received by the USPTO on March 9, 2011.

Telephone inquires regarding this decision should be directed to Terri Johnson at (571) 272-2991.

This application is being referred to Technology Center AU 2462 for appropriate action in the normal course of business on the reply received with petition.

Ramesh Krishnamurthy
Petitions Examiner
Office of Petitions

Doc Code: PET.GREEN
Document Description: Petition for Green Tech Pilot

PTO/SB/420 (03-11)

PETITION TO MAKE SPECIAL UNDER THE GREEN TECHNOLOGY PILOT PROGRAM

Attorney Docket Number: 11-0679.03	Application Number (if known): 12/742076	Filing date: May 26, 2009

First Named Inventor: Vladimir Moldovanu

Title: Method and System of Recovering the Heat Wasted from the Steam Boilers Continuous Blow Down to Preheat the Boiler Combustion Air

APPLICANT HEREBY REQUESTS TO PARTICIPATE IN THE GREEN TECHNOLOGY PILOT PROGRAM FOR THE ABOVE-IDENTIFIED APPLICATION. See Instruction Sheet on page 2.

This petition must be timely filed electronically using the USPTO electronic filing system, EFS-Web.

1. By filing this petition:

   Applicant is requesting early publication: Applicant hereby requests early publication under 37 CFR 1.219 and the publication fee set forth in 37 CFR 1.18(d) accompanies this request.

2. By filing this petition: applicant is agreeing to make an election without traverse in a telephonic interview and elect an invention that meets the eligibility requirements for the Green Technology Pilot Program, if the Office determines that the claims are not obviously directed to a single invention. See Instruction Sheet.

3. This request is accompanied by statements of special status for the eligibility requirement.

4. The application contains no more than three (3) independent claims and twenty (20) total claims.

5. The application does not contain any multiple dependent claims.

6. Other attachments: _____

Signature	Date 8 AUG 2011
Name (Print/Typed) George P. Kobler	Registration Number 46837

Note: *Signatures of all the inventors or assignees of record of the entire interest or their representative(s) are required in accordance with 37 CFR 1.33 and 11.18. Please see 37 CFR 1.4(d) for the form of the signature. If necessary, submit multiple forms for more than one signature, see below*.*

☐ *Total of _____ forms are submitted.

If you need assistance in completing the form, call 1-800-PTO-9199 and select option 2.

IN THE UNITED STATES PATENT AND TRADEMARK OFFICE

In re Application of: Moldovanu	Examiner: Greenia, Seth
App. Serial No.: 12/492,076	Art Unit: 3749
Filed: May 26, 2009	Confirmation No.: 7035
Title: ***Method and System of Recovering the Heat Wasted From the Steam Boilers Continuous Blow Down to Preheat the Boiler Combustion Air***	

STATEMENT REGARDING ELIGIBILITY FOR PETITION TO MAKE SPECIALUNDER THE GREEN TECHNOLOGY PILOT PROGRAM

Applicant in the above-styled case hereby respectfully asserts that the present application is eligible for special status under the Green Technology Pilot Program on the grounds that the claims therein are directed to a single invention that results in a more efficient utilization of energy resources, namely, in a steam generating boiler system, preheating boiler combustion air using heat generated by the boiler itself, in the form of "blow down," that would otherwise be allowed to dissipate. Since the combustion air is pre-heated the combustion reaction will take less energy to occur and provide more energy to heat the boiler water resulting greater efficiency. And since heat already generated in system is used, a net efficiency is realized. The application was submitted with twenty

claims of which two are independent claims. It is believed that the application is directed to only one invention and that a restriction election requirement will not be necessary. Nonetheless, Applicant acknowledges and agrees to the requirement to elect an eligible invention, without traverse.

Please be advised that the present application was already published on December 2, 2010. Accordingly, Applicant submits that request for early publication and the associated fee under Rule 1.18(d) is not required. Applicant therefore respectfully requests waiver of this requirement.

Respectfully submitted,

August 9, 2011

George P. Kobler
Reg. No. 46,837

LANIER FORD SHAVER & PAYNE P.C.
Customer Number 021491
P.O. Box 2087
Huntsville, Alabama 35804-2087
Phone: (256) 535-1100
Fax: (256) 533-9322

UNITED STATES PATENT AND TRADEMARK OFFICE

UNITED STATES DEPARTMENT OF COMMERCE
United States Patent and Trademark Office
Address: COMMISSIONER FOR PATENTS
P.O. Box 1450
Alexandria, Virginia 22313-1450
www.uspto.gov

APPLICATION NO.	FILING DATE	FIRST NAMED INVENTOR	ATTORNEY DOCKET NO.	CONFIRMATION NO.
12/472,076	05/26/2009	Vladimir Moldovanu	11-0679.03	7035

21491 7590 09/08/2011
LANIER FORD SHAVER & PAYNE P.C.
P O BOX 2087
HUNTSVILLE, AL 35804-2087

EXAMINER
GREENIA, SETH

ART UNIT	PAPER NUMBER
3749	

MAIL DATE	DELIVERY MODE
09/08/2011	PAPER

Please find below and/or attached an Office communication concerning this application or proceeding.

The time period for reply, if any, is set in the attached communication.

UNITED STATES PATENT AND TRADEMARK OFFICE

Commissioner for Patents
United States Patent and Trademark Office
P.O. Box 1450
Alexandria, VA 22313-1450
www.uspto.gov

LANIER FORD SHAVER & PAYNE P.C.
P O BOX 2087
HUNTSVILLE AL 35804-2087

In re Application of	:	
MOLDOVANU, VLADIMIR	:	DECISION ON PETITION
Application No. 12/472,076	:	TO MAKE SPECIAL UNDER
Filed: May 26, 2009	:	THE GREEN TECHNOLOGY
Attorney Docket No. 11-0679.03	:	PILOT PROGRAM

This is a decision on the petition under 37 CFR 1.102, filed Aug. 10, 2011, to make the above-identified application special under the pilot program for applications pertaining to Green Technologies as set forth in 74 Federal Register Notice 64666 (December 8, 2009) and amended by 75 Federal Register Notice 28554 (May 21, 2010) and 75 Federal Register Notice 69049 (November 10, 2010).

The petition is **DISMISSED**.

If reconsideration of this decision is desired, a petition for reconsideration must be filed within ONE (1) MONTH OR THIRTY (30) DAYS from the mail date of this decision, whichever is longer. No extension of this time limit can be granted under 37 CFR 1.136(a) or (b). The petition for reconsideration should include an exhaustive attempt to provide the lacking item(s) noted below, since, after a decision on the petition for reconsideration, no further reconsideration or review of the matter will be undertaken by the Director.

A grantable petition to make an application special under 37 CFR 1.102 and the pilot program as set forth in 74 FR 64666 must be directed to a nonprovisional application filed under 35 USC 111(a) or be a national stage entry under 35 USC 371, exclusive of any reissue applications.

In order to qualify for special status, the following requirements must be met. 1) The application must have no more than 3 independent claims and no more than 20 total claims. 2) The application must not contain any multiple dependent claims. 3) The petition must state the basis for seeking special status, i.e., the claimed invention either: A) materially enhances the quality of the environment or B) materially contributes to: i) the discovery or development of renewable energy resources, ii) the more efficient utilization and conservation of energy resources, or iii) greenhouse gas emission reduction. 4) If the disclosure is not clear on its face that the claimed invention materially contributes under category (A) or (B), the petition must be accompanied by a statement by the applicant, assignee, or an attorney/agent registered to practice before the

Office explaining how the materiality standard is met. 5) A statement that applicant will agree to make an election without traverse in a telephonic interview if a restriction requirement is made by the examiner. 6) The petition to make special must be filed electronically. 7) The petition must be filed at least one day prior to the date that a first Office Action appears in the Patent Application Information Retrieval (PAIR) system. 8) The petition must be accompanied by a request for early publication in compliance with 37 CFR 1.219 and include the publication fee as set forth in 37 CFR 1.18(d). The requirement for a fee for consideration of the petition to make special for applications pertaining to Green Technologies has been waived. The petition lacks items #4 and # 8.

In regard to item 4, petitioner should note that the instant petition includes a statement identifying the basis for the special status (i.e., whether the instant invention (1) materially enhances the quality of the environment or materially contributes to (2) development of renewable energy resources or energy conservation, or (3) greenhouse gas reduction) as required by sections II and III of the notice. However, as stated in the notice, applicant must also provide a statement pertaining to the materiality standard if the application disclosure is not clear on its face as to the materiality of the basis for the special status of the invention. This petition lacks such a statement and it is not agreed that the application on its face meets that materiality standard. Petitioner states that the claimed invention relates to green technology. This is not convincing. It is not clear how the claimed combustion air preheating in a boiler heating system and method will provide and enhance the quality of the environment or contribute to development of renewable energy resources or energy conservation or greenhouse gas reduction. There is no relationship between the statement and the claimed subject matter.

In regard to item 8, petitioner should note that since no request in compliance with 37 CFR 1.219 has been made for the early publication of the present application and the publication fee $300.00 as set forth in 37 CFR 1.18(d) has not been received, the petition is dismissed.

Any reconsideration of this decision should be submitted through the USPTO electronic filing system, EFS-Web, and selecting the document description of "Petition for Green Tech Pilot" on the EFS-Web screen.

Telephone inquiries concerning this decision should be directed to Henry C. Yuen at 571-272-4856. Currently, the application is undergoing pre-examination processing. Upon completion, the application will be forwarded to the Technology Center Art Unit 3749 for action in its regular turn.

/Henry C. Yuen/

Henry C. Yuen
Quality Assurance Specialist
Technology Center 3700

UNITED STATES PATENT AND TRADEMARK OFFICE

Commissioner for Patents
United States Patent and Trademark Office
P.O. Box 1450
Alexandria, VA 22313-1450
www.uspto.gov

LANIER FORD SHAVER & PAYNE P.C.
P O BOX 2087
HUNTSVILLE AL 35804-2087

MAILED
JAN 23 2012
OFFICE OF PETITIONS

In re Application of	:	
Vladimir Moldovanu	:	
Application No. 12/472,076	:	DECISION ON PETITION
Filed: May 26, 2009	:	TO WITHDRAW
Attorney Docket No. 11-0679.03	:	FROM RECORD
	:	

This is a decision on the Request to Withdraw as attorney or agent of record under 37 C.F.R. § 1.36(b), filed December 21, 2011.

The request is **APPROVED**.

A grantable request to withdraw as attorney/agent of record must be signed by every attorney/agent seeking to withdraw or contain a clear indication that one attorney is signing on behalf of another/others. A request to withdraw will not be approved unless at least 30 (thirty) days would remain between the date of approval and the later of the expiration date of a time to file a response or the expiration date of the maximum time period which can be extended under 37 C.F.R. § 1.136(a).

The request was signed by George P. Kobler on behalf of all attorneys/agents associated with customer number 21491. All attorneys/agents associated with customer number 21491 have been withdrawn.

Applicant is reminded that there is no attorney of record at this time.

The correspondence address has been changed and is copied below.

Telephone inquiries concerning this decision should be directed to Kimberly Inabinet at 571-272-4618.

/Kimberly Inabinet/

Kimberly Inabinet
Petitions Examiner
Office of Petitions

cc: Vladimir Moldovanu
11060 Caravel Circle #303
Fort Myers, FL 33908

UNITED STATES PATENT AND TRADEMARK OFFICE

UNITED STATES DEPARTMENT OF COMMERCE
United States Patent and Trademark Office
Address: COMMISSIONER FOR PATENTS
P.O. Box 1450
Alexandria, Virginia 22313-1450
www.uspto.gov

APPLICATION NUMBER	FILING OR 371(C) DATE	FIRST NAMED APPLICANT	ATTY. DOCKET NO./TITLE
12/472,076	05/26/2009	Vladimir Moldovanu	11-0679.03

CONFIRMATION NO. 7035

POWER OF ATTORNEY NOTICE

21491
LANIER FORD SHAVER & PAYNE P.C.
P O BOX 2087
HUNTSVILLE, AL 35804-2087

OC000000052004061

Date Mailed: 01/13/2012

NOTICE REGARDING CHANGE OF POWER OF ATTORNEY

This is in response to the Power of Attorney filed 12/21/2011.

- The withdrawal as attorney in this application has been accepted. Future correspondence will be mailed to the new address of record. 37 CFR 1.33.

/kainabinet/

Office of Data Management, Application Assistance Unit (571) 272-4000, or (571) 272-4200, or 1-888-786-0101

UNITED STATES PATENT AND TRADEMARK OFFICE

UNITED STATES DEPARTMENT OF COMMERCE
United States Patent and Trademark Office
Address: COMMISSIONER FOR PATENTS
P.O. Box 1450
Alexandria, Virginia 22313-1450
www.uspto.gov

APPLICATION NO.	FILING DATE	FIRST NAMED INVENTOR	ATTORNEY DOCKET NO.	CONFIRMATION NO.
12/472,097	05/26/2009	Mikko Juhani Timperi	800.0599.U1(US)	7066

10948 7590 04/02/2012
Harrington & Smith, Attorneys At Law, LLC
4 Research Drive, Suite 202
Shelton, CT 06484

EXAMINER
WILEY, DANIEL J

ART UNIT	PAPER NUMBER
3679	

MAIL DATE	DELIVERY MODE
04/02/2012	PAPER

Please find below and/or attached an Office communication concerning this application or proceeding.

The time period for reply, if any, is set in the attached communication.

UNITED STATES PATENT AND TRADEMARK OFFICE

Commissioner for Patents
United States Patent and Trademark Office
P.O. Box 1450
Alexandria, VA 22313-1450
www.uspto.gov

APR - 2 2012

Mark F. Harrington
Harrington & Smith
Attorneys At Law, LLC
4 Research Drive
Shelton, CT 06484-6212

In re Application of Mikko Timperi et al Application No. 12/472,097 Filed: May 26, 2009 Attorney Docket No.: 800.0599.U1 (US) For: METHOD AND APPARATUS FOR JOINING TWO PARTS WITH ELEMENT FOR MOVING THE PARTS	DECISION ON PETITION TO INVOKE SUPERVISORY AUTHORITY UNDER 37 CFR 1.181

This is in response to applicants' petition to invoke supervisory authority under 37 CFR 1.181 that was filed on January 11, 2012 requesting withdrawal of the finality of the Office action mailed October 6, 2011. The petition also requests withdrawal of the drawing objection under 37 CFR 1.83(a).

The petition is **Granted-in-Part and DISMISSED AS MOOT-in-Part**.

A review of the file reveals that a Request for Continued Examination (RCE) was filed on February 13, 2012. Thus, the issue of premature finality of the October 6, 2012 Office action has been rendered moot since the RCE filing operates to withdraw the finality of any Office action. See 37 CFR 1.114(d) and MPEP 706.07(h).

With respect to the merits argued by petitioner, a review of the finality of the previous Office action has been conducted. Applicants argue that the Office action of October 6, 2011 contained a new ground of rejection not necessitated by applicants' amendment. In particular, it is argued that the Section 112, second paragraph, rejection of claims 9, 23 and 24 constituted a new ground of rejection that was not necessitated by applicants' amendment. It is further stated that the examiner was requested to withdraw the finality of the action on this basis and that the examiner, instead, indicated in the Advisory action mailed January 5, 2012 that this rejection was withdrawn "since the deficiencies are merely objectionable matters of form that do not render the claims indefinite".

Applicants' are correct that the Section 112, second paragraph, rejection of claims 9, 23 and 24 constituted a new ground of rejection that was not necessitated by their amendment because the language in question was previously present and no issue was raised with that language in the

first action. Applicants are also correct that MPEP 706.07(d) requires that the finality be withdrawn (as opposed to withdrawing the "new" rejection at a later date).

However, in view of the above noted RCE filing, the request to withdraw the finality is rendered moot and is hereby **DISMISSED as MOOT**.

With respect to the drawing objection, applicants argue that there is no requirement for all of the drawings to show all of the claimed elements and that Figs. 1 and 2b show the second body part.

A review of the file reveals that Applicants are correct that Figs. 1 and 2b show two body parts (101, 102; 201, 202) in conjunction with a join element (103; 203). It is further noted that Fig. 3a shows both the join element 303 and the one body part 302 with break section lines. These figures are sufficient to illustrate the claimed "two parts" and "join element" within the meaning of 37 CFR 1.83(a).

Since the claimed subject matter is deemed to be sufficiently shown by the figures, the 37 CFR 1.83(a) drawing objection is inappropriate and is hereby withdrawn. The request to withdraw the examiner's objection to the drawings is hereby **GRANTED**.

The RCE filed on February 13, 2012 has been entered and forwarded to the examiner for action.

Any questions regarding this decision should be directed to Supervisory Patent Examiner Daniel P. Stodola at (571) 272-7087.

David L. Talbott, Director
Technology Center 3600
(571) 272-1934
Facsimile No.: (571) 273-8300

DS/SNM: 3/23/12

UNITED STATES PATENT AND TRADEMARK OFFICE

Commissioner for Patents
United States Patent and Trademark Office
P.O. Box 1450
Alexandria, VA 22313-1450
www.uspto.gov

THE JANSSON FIRM
3616 FAR WEST BLVD, SUITE 117-314
AUSTIN, TX 78731

MAILED
MAY 31 2011
OFFICE OF PETITIONS

In re Application of
Chetan KAPOOR, et *al.*
Application No. 12/472,160
Filed: May 26, 2009
Attorney Docket No. **114.001**

DECISION ON PETITION TO WITHDRAW FROM RECORD

This is a decision on the Request to Withdraw as attorney or agent of record under 37 C.F.R. § 1.36(b), filed May 10, 2011.

The request is **NOT APPROVED**.

The request to withdraw as attorney/agent of record and change of correspondence address is hereby not accepted. Petitioner has not complied with current USPTO requirements, set forth in 37 CFR 10.40 concerning Request for Withdrawal as Attorney and Change of Correspondence Address.

Petitioner has not properly submitted forwarding correspondence address information for the application.

The Office will only accept correspondence address changes to the most current address information provided for the assignee of the entire interest *who properly became of record under 37 CFR 3.71*, or if no assignee of the entire interest has properly been made of record, the most current address information provided for the first named inventor. 37 CFR 3.71 (c) states:

> ***An assignee becomes of record either in a national patent application or a reexamination proceeding by filing a statement in compliance with § 3.73 (b) that is signed by a party who is authorized to act on behalf of the assignee.***

In order to request or take action in a patent matter, the assignee must establish its ownership of the patent to the satisfaction of the Director. In this regard, a Statement under 37 CFR 3.73(b) must have either: (i) documentary evidence of a chain of title from the original owner to the assignee (*e.g.*, copy of an executed assignment), and a statement affirming that the documentary evidence of the chain of title from the original owner to the assignee was or concurrently is being submitted for recordation pursuant to § 3.11; or (ii) a statement specifying where documentary evidence of a

chain of title from the original owner to the assignee is recorded in the assignment records of the Office (*e.g.*, reel and frame number). For petitioner's convenience, a PTO/SB/96 Statement Under 37 CFR 3.73(b) form has been enclosed.

The Office will also no longer change the correspondence address to that of a new practitioner unless the Request is accompanied by a power of attorney to a new practitioner (e.g., Form PTO/SB/82). All future communications from the Office will be directed to the above-listed address until otherwise properly notified by the applicant or a proper change of correspondence address has been submitted.

Telephone inquiries concerning this decision should be directed to the undersigned at (571) 272- 7253.

All other inquires concerning either the examination or status of the application should be directed to the Technology Center at (571) 272-3600.

/Monica A. Graves/
Petitions Examiner, Office of Petitions

UNITED STATES PATENT AND TRADEMARK OFFICE

Commissioner for Patents
United States Patent and Trademark Office
P.O. Box 1450
Alexandria, VA 22313-1450
www.uspto.gov

CHOATE, HALL & STEWART
CITRIX SYSTEMS, INC.
TWO INTERNATIONAL PLACE
BOSTON MA 02110

MAILED

NOV 22 2010

OFFICE OF PETITIONS

In re Application of

DECASPER, Dan S. et al.
Application No. 12/472,238
Filed: May 26, 2009
Attorney Docket No. **2006579-1622 (CTX-283DV)**

DECISION ON PETITION
TO WITHDRAW
FROM RECORD

This is a decision on the Request to Withdraw as attorney or agent of record under 37 C.F.R. § 1.36(b), filed November 10, 2010.

The request is **NOT APPROVED**.

The Office will no longer accept address changes to a new practitioner or law firm filed with a Request, absent the filing of a power of attorney to the new representative. The Office will either change the correspondence address of record to the most current address information provided for the assignee of the entire interest who properly became of record under 37 CFR 3.71 or, if no assignee of the entire interest has properly been made of record under 37 CFR 3.71, the most current address information provided for the first named inventor.

Accordingly, the request to withdraw from record cannot be approved because the request to change the correspondence address is not that of: (1) the first named inventor; or (2) an assignee of the entire interest under 37 C.F.R 3.71 who has properly intervened.

If an assignee has intervened in this application, then a Statement under 37 CFR 3.73(b) or a copy of the actual assignment must be submitted with a renewed request.

All future communications from the Office will continue to be directed to the above-listed address until otherwise notified by applicant.

Telephone inquiries concerning this decision should be directed to Tredelle Jackson at 571-272- 2783.

/Tredelle D. Jackson/
Paralegal Specialist
Office of Petitions

cc: **FOLEY & LARDNER LLP**
111 HUNTINGTON AVENUE
26TH FLOOR
BOSTON, MA 02199-7610

UNITED STATES PATENT AND TRADEMARK OFFICE

Commissioner for Patents
United States Patent and Trademark Office
P.O. Box 1450
Alexandria, VA 22313-1450
www.uspto.gov

GREGORY T. PLETTA
NANOSPHERE, INC.
4088 COMMERICAL AVENUE
NORTHBROOK IL 60062-1829

MAILED
SEP 26 2011
OFFICE OF PETITIONS

In re Application of	:	
GARIMELLA, et al	:	
Application No. 12/472,273	:	DECISION ON PETITION
Filed: May 26, 2009	:	
Attorney Docket No. 2924.005US1	:	

This is a decision on the petition under the unintentional provisions of 37 CFR 1.137(b), filed September 1, 2011, to revive the above-identified application.

The petition is **GRANTED**.

The application became abandoned for failure to reply in a timely manner to the Restriction Requirement, mailed November 24, 2010, which set a shortened statutory period for reply of one (1) month or thirty (30) days (whichever is later). No extensions of time under the provisions of 37 CFR 1.136(a) were obtained. Accordingly, the application became abandoned on December 25, 2010. A Notice of Abandonment was mailed June 7, 2011.

The petition satisfies the requirements of 37 CFR 1.137(b) in that petitioner has supplied (1) the reply in the form of an amendment and election, (2) the petition fee of $810; and (3) an adequate required statement of unintentional delay.

37 CFR 1.137(b)(3) requires a statement that "the entire delay in filing the required reply from the due date for the reply until the filing of a grantable petition pursuant to 37 CFR 1.137(b) was unintentional." Since the statement appearing in the petition varies from the language required by 37 CFR 1.137(b)(3), the statement is being construed as the required statement. Petitioner must notify the Office if this is **not** a correct reading of the statement appearing in the petition.

There is no indication that the person signing the petition was ever given a power of attorney to prosecute the application. If the person signing the petition desires to receive future correspondence regarding this application, the appropriate power of attorney document must be

submitted. While a courtesy copy of this decision is being mailed to the person signing the petition, all future correspondence will be directed to the address currently of record until appropriate instructions are received.

Telephone inquiries concerning this decision should be directed to the undersigned at (571) 272-6735.

This application is being referred to Technology Center AU 1641 for appropriate action by the Examiner in the normal course of business on the reply received September 1, 2011.

/Diane C. Goodwyn/
Diane C. Goodwyn
Petitions Examiner
Office of Petitions

cc: JANET E. EMBRETSON
SCHWEMAN, LUNDBERG & WOESSNER, P.A.
P.O. BOX 2938
MINNEAPOLIS, MN 55402

UNITED STATES PATENT AND TRADEMARK OFFICE

Commissioner for Patents
United States Patent and Trademark Office
P.O. Box 1450
Alexandria, VA 22313-1450
www.uspto.gov

Daniel E. Ovanezian
Lowenstein Sandler PC
65 Livingston Avenue
Roseland NJ 07068

MAILED
NOV 03 2011
OFFICE OF PETITIONS

In re Application of	:	
Jansen et al.	:	
Application No. 12/472287	:	
Filing or 371(c) Date: 05/26/2009	:	ON PETITION
Attorney Docket Number:	:	
5220P459	:	

This decision is in response to the "Petition Under 37 CFR § 1.182 to Change an Inventor Name," filed October 11, 2011.

MPEP 201.03, Correction of Inventorship in an Application, provides

(B) Where a typographical or transliteration error in the spelling of an inventor 's name is discovered, the Office should simply be notified of the error. A new oath or declaration is not required. See, MPEP § 605.04(g). Reference to the notification will be made on the previously filed oath or declaration.

However, "[e]xcept for correction of a typographical or transliteration error in the spelling of an inventor's name, a request to have the name changed from the typewritten version to the signed version or any other corrections in the name of the inventor(s) will not be entertained, unless accompanied by a petition under 37 CFR 1.182 together with an appropriate petition fee.[1]"

MPEP 605.04(b)

Applicant is further advised that

> Although 37 CFR 1.76 does not change the practice in MPEP § 201.03 and § 605.04(b) regarding correction of a typographical or transliteration error in the spelling of an inventor's name whereby all that is required is notification of the error to the Office, the Office strongly encourages the filing of an application data sheet or a supplemental application data sheet to correct a typographical or transliteration error in the spelling of an inventor's name. A supplemental oath or

[1] The fee for a petition under 37 CFR 1.182 is $400.00, effective December 8, 2004. The petition fee has been charged to Petitioner's deposit account as authorized in the petition.

> declaration is not required. If applicant merely files a statement notifying the Office of the typographical or transliteration error in the spelling of an inventor's name without submitting an application data sheet or a supplemental application data sheet, any patent to issue is less likely to reflect the correct spelling since the spelling of the inventor's name is taken from the oath or declaration, or any subsequently filed application data sheet.

MPEP 601.05

The petition is hereby **granted**.

The name of inventor Geert Jansen has been changed to Gerardus Theodorus Jansen and the name Gerardus Theodorus Jansen has been entered and made of record in the above-identified application.

The application is being referred to Publishing Division for processing into a patent in the normal course of business.

Telephone inquiries concerning this matter should be directed to the undersigned at (571) 272-3232.

/DLW/

Derek L. Woods
Attorney
Office of Petitions

Enclosures: Corrected Filing Receipt

UNITED STATES PATENT AND TRADEMARK OFFICE

UNITED STATES DEPARTMENT OF COMMERCE
United States Patent and Trademark Office
Address: COMMISSIONER FOR PATENTS
P.O. Box 1450
Alexandria, Virginia 22313-1450
www.uspto.gov

APPLICATION NUMBER	FILING or 371(c) DATE	GRP ART UNIT	FIL FEE REC'D	ATTY.DOCKET.NO	TOT CLAIMS	IND CLAIMS
12/472,287	05/26/2009	2455	1442	5220P459	21	3

CONFIRMATION NO. 7374

CORRECTED FILING RECEIPT

Daniel E. Ovanezian
Lowenstein Sandler PC
65 Livingston Avenue
Roseland, NJ 07068

OC000000050728446

Date Mailed: 11/01/2011

Receipt is acknowledged of this non-provisional patent application. The application will be taken up for examination in due course. Applicant will be notified as to the results of the examination. Any correspondence concerning the application must include the following identification information: the U.S. APPLICATION NUMBER, FILING DATE, NAME OF APPLICANT, and TITLE OF INVENTION. Fees transmitted by check or draft are subject to collection. Please verify the accuracy of the data presented on this receipt. **If an error is noted on this Filing Receipt, please submit a written request for a Filing Receipt Correction. Please provide a copy of this Filing Receipt with the changes noted thereon. If you received a "Notice to File Missing Parts" for this application, please submit any corrections to this Filing Receipt with your reply to the Notice. When the USPTO processes the reply to the Notice, the USPTO will generate another Filing Receipt incorporating the requested corrections**

Applicant(s)

Gerardus Theodorus Jansen, Raleigh, NC;
Simo S. Sorce, New york, NY;

Power of Attorney: The patent practitioners associated with Customer Number 14400

Domestic Priority data as claimed by applicant

Foreign Applications (You may be eligible to benefit from the **Patent Prosecution Highway** program at the USPTO. Please see http://www.uspto.gov for more information.)

Permission to Access - A proper **Authorization to Permit Access to Application by Participating Offices** (PTO/SB/39 or its equivalent) has been received by the USPTO.

If Required, Foreign Filing License Granted: 06/03/2009

The country code and number of your priority application, to be used for filing abroad under the Paris Convention, is **US 12/472,287**

Projected Publication Date: Not Applicable

Non-Publication Request: No

Early Publication Request: No

Title

SYSTEM AND METHOD FOR LOCATION DISCOVERY BASED ON DNS

Preliminary Class

709

PROTECTING YOUR INVENTION OUTSIDE THE UNITED STATES

Since the rights granted by a U.S. patent extend only throughout the territory of the United States and have no effect in a foreign country, an inventor who wishes patent protection in another country must apply for a patent in a specific country or in regional patent offices. Applicants may wish to consider the filing of an international application under the Patent Cooperation Treaty (PCT). An international (PCT) application generally has the same effect as a regular national patent application in each PCT-member country. The PCT process **simplifies** the filing of patent applications on the same invention in member countries, but **does not result** in a grant of "an international patent" and does not eliminate the need of applicants to file additional documents and fees in countries where patent protection is desired.

Almost every country has its own patent law, and a person desiring a patent in a particular country must make an application for patent in that country in accordance with its particular laws. Since the laws of many countries differ in various respects from the patent law of the United States, applicants are advised to seek guidance from specific foreign countries to ensure that patent rights are not lost prematurely.

Applicants also are advised that in the case of inventions made in the United States, the Director of the USPTO must issue a license before applicants can apply for a patent in a foreign country. The filing of a U.S. patent application serves as a request for a foreign filing license. The application's filing receipt contains further information and guidance as to the status of applicant's license for foreign filing.

Applicants may wish to consult the USPTO booklet, "General Information Concerning Patents" (specifically, the section entitled "Treaties and Foreign Patents") for more information on timeframes and deadlines for filing foreign patent applications. The guide is available either by contacting the USPTO Contact Center at 800-786-9199, or it can be viewed on the USPTO website at http://www.uspto.gov/web/offices/pac/doc/general/index.html.

For information on preventing theft of your intellectual property (patents, trademarks and copyrights), you may wish to consult the U.S. Government website, http://www.stopfakes.gov. Part of a Department of Commerce initiative, this website includes self-help "toolkits" giving innovators guidance on how to protect intellectual property in specific countries such as China, Korea and Mexico. For questions regarding patent enforcement issues, applicants may call the U.S. Government hotline at 1-866-999-HALT (1-866-999-4158).

LICENSE FOR FOREIGN FILING UNDER

Title 35, United States Code, Section 184

Title 37, Code of Federal Regulations, 5.11 & 5.15

GRANTED

The applicant has been granted a license under 35 U.S.C. 184, if the phrase "IF REQUIRED, FOREIGN FILING LICENSE GRANTED" followed by a date appears on this form. Such licenses are issued in all applications where the conditions for issuance of a license have been met, regardless of whether or not a license may be required as

set forth in 37 CFR 5.15. The scope and limitations of this license are set forth in 37 CFR 5.15(a) unless an earlier license has been issued under 37 CFR 5.15(b). The license is subject to revocation upon written notification. The date indicated is the effective date of the license, unless an earlier license of similar scope has been granted under 37 CFR 5.13 or 5.14.

This license is to be retained by the licensee and may be used at any time on or after the effective date thereof unless it is revoked. This license is automatically transferred to any related applications(s) filed under 37 CFR 1.53(d). This license is not retroactive.

The grant of a license does not in any way lessen the responsibility of a licensee for the security of the subject matter as imposed by any Government contract or the provisions of existing laws relating to espionage and the national security or the export of technical data. Licensees should apprise themselves of current regulations especially with respect to certain countries, of other agencies, particularly the Office of Defense Trade Controls, Department of State (with respect to Arms, Munitions and Implements of War (22 CFR 121-128)); the Bureau of Industry and Security, Department of Commerce (15 CFR parts 730-774); the Office of Foreign AssetsControl, Department of Treasury (31 CFR Parts 500+) and the Department of Energy.

NOT GRANTED

No license under 35 U.S.C. 184 has been granted at this time, if the phrase "IF REQUIRED, FOREIGN FILING LICENSE GRANTED" DOES NOT appear on this form. Applicant may still petition for a license under 37 CFR 5.12, if a license is desired before the expiration of 6 months from the filing date of the application. If 6 months has lapsed from the filing date of this application and the licensee has not received any indication of a secrecy order under 35 U.S.C. 181, the licensee may foreign file the application pursuant to 37 CFR 5.15(b).

Doc Code: PET.AUTO Document Description: Petition automatically granted by EFS-Web	PTO/SB/140 U.S. Patent and Trademark Office Department of Commerce

Electronic Petition Request	**PETITION TO WITHDRAW AN APPLICATION FROM ISSUE AFTER PAYMENT OF THE ISSUE FEE UNDER 37 CFR 1.313(c)**
Application Number	12472306
Filing Date	26-May-2009
First Named Inventor	David Sinai
Art Unit	2618
Examiner Name	JOHN LEE
Attorney Docket Number	MP1512.C1 / MV1 - 0125US
Title	DEVICE, SYSTEM AND METHOD FOR MULTI-PROFILE WIRELESS COMMUNICATION

An application may be withdrawn from issue for further action upon petition by the applicant. To request that the Office withdraw an application from issue, applicant must file a petition under this section including the fee set forth in § 1.17(h) and a showing of good and sufficient reasons why withdrawal of the application from issue is necessary.

APPLICANT HEREBY PETITIONS TO WITHDRAW THIS APPLICATION FROM ISSUE UNDER 37 CFR 1.313(c).

A grantable petition requires the following items:
(1) Petition fee; and
(2) One of the following reasons:
(a) Unpatentability of one or more claims, which must be accompanied by an unequivocal statement that one or more claims are unpatentable, an amendment to such claim or claims, and an explanation as to how the amendment causes such claim or claims to be patentable;
(b) Consideration of a request for continued examination in compliance with § 1.114 (for a utility or plant application only); or
(c) Express abandonment of the application. Such express abandonment may be in favor of a continuing application, but not a CPA under 37 CFR 1.53(d).

Petition Fee

- ☐ Applicant claims SMALL ENTITY status. See 37 CFR 1.27.
- ☐ Applicant is no longer claiming SMALL ENTITY status. See 37 CFR 1.27(g)(2).
- ☐ Applicant(s) status remains as SMALL ENTITY.
- ☒ Applicant(s) status remains as other than SMALL ENTITY

Reason for withdrawal from issue

○ One or more claims are unpatentable

◉ Consideration of a request for continued examination (RCE) (List of Required Documents and Fees)

○ Applicant hereby expressly abandons the instant application (any attorney/agent signing for this reason must have power of attorney pursuant to 37 CFR 1.32(b)).

RCE request,submission, and fee.

☐ I certify, in accordance with 37 CFR 1.4(d)(4) that : The RCE request ,submission, and fee have already been filed in the above-identified application on

☒ Are attached.

THIS PORTION MUST BE COMPLETED BY THE SIGNATORY OR SIGNATORIES

I certify, in accordance with 37 CFR 1.4(d)(4) that I am:

◉ An attorney or agent registered to practice before the Patent and Trademark Office who has been given power of attorney in this application.

○ An attorney or agent registered to practice before the Patent and Trademark Office, acting in a representative capacity.

○ A sole inventor

○ A joint inventor; I certify that I am authorized to sign this submission on behalf of all of the inventors

○ A joint inventor; all of whom are signing this e-petition

○ The assignee of record of the entire interest that has properly made itself of record pursuant to 37 CFR 3.71

Signature	/Kevin T. LeMond/
Name	Kevin T. LeMond
Registration Number	35933

UNITED STATES PATENT AND TRADEMARK OFFICE

Commissioner for Patents
United States Patent and Trademark Office
P.O. Box 1450
Alexandria, VA 22313-1450
www.uspto.gov

Decision Date : November 22,2011

In re Application of :

David Sinai

DECISION ON PETITION

UNDER CFR 1.313(c)(2)

Application No : 12472306

Filed : 26-May-2009

Attorney Docket No : MP1512.C1 / MV1 - 0125US

This is an electronic decision on the petition under 37 CFR 1.313(c)(2), filed November 22,2011 to withdraw the above-identified application from issue after payment of the issue fee.

The petition is **GRANTED.**

The above-identified application is withdrawn from issue for consideration of a submission under 37 CFR 1.114 (request for continued examination). See 37 CFR 1.313(c)(2).

Petitioner is advised that the issue fee paid in this application cannot be refunded. If, however, this application is again allowed, petitioner may request that it be applied towards the issue fee required by the new Notice of Allowance.

Telephone inquiries concerning this decision should be directed to the Patent Electronic Business Center (EBC) at 866-217-9197.

This application file is being referred to Technology Center AU 2618 for processing of the request for continuing examination under 37 CFR 1.114 .

Office of Petitions

UNITED STATES PATENT AND TRADEMARK OFFICE

Commissioner for Patents
United States Patent and Trademark Office
P.O. Box 1450
Alexandria, VA 22313-1450
www.uspto.gov

MAILED
NOV 16 2011
OFFICE OF PETITIONS

DANIEL E. OVANEXIAN
LOWENSTEIN SANDLER, PC
65 LIVINGSTON AVENUE
ROSELAND, NJ 07068

In re Application of	:	
Geert Jansen, et al.	:	
Application No. 12/472,307	:	DECISION ON PETITION
Filed: May 26, 2009	:	
Attorney Docket No. P486	:	

This is a decision on the petition under 37 CFR 1.182, filed, October 11, 2011, to change the name of inventor "Gerardus Theodorus Jansenl" to – Geradus Theodorus Janesn --.

The petition is **DISMISSED**.

The request cannot be granted because the petitioner has not provided a copy of the procedure whereby the change of name was effected nor has he provided proof of his actual given name.

In view of the above, the petition under § 1.182 cannot be granted at this time to change the inventor's name.

Further correspondence with respect to this matter should be addressed as follows:

By mail: Mail Stop PETITIONS
Commissioner for Patents
Post Office Box 1450
Alexandria, VA 22313-1450

By hand: Customer Service Window
Mail Stop Petitions
Randolph Building
401 Dulany Street
Alexandria, VA 22314

By fax: (571) 273-8300
ATTN: Office of Petitions

Telephone inquiries concerning this matter may be directed to April M. Wise at (571) 272-1642.

/Carl Friedman/
Carl Friedman
Petitions Examiner
Office of Petitions

UNITED STATES PATENT AND TRADEMARK OFFICE

Commissioner for Patents
United States Patent and Trademark Office
P.O. Box 1450
Alexandria, VA 22313-1450
www.uspto.gov

MAILED
APR 17 2012
OFFICE OF PETITIONS

FENWICK & WEST LLP
SILICON VALLEY CENTER
801 CALIFORNIA STREET
MOUNTAIN VIEW CA 94041

In re Application of :
Lindsay, et al. :
Application No. 12/472,318 : ON PETITION
Filed: May 26,2 009 :
Attorney Docket No. **26295-15521**

This is a decision on the petition under 37 CFR 1.182 filed March 21, 2012, to change the name of a joint inventor cited on this application in USPTO records.

The petition is granted.

The name of the second named joint inventor for the above-cited application is changed to "Thomas Giovanni Carriero."

A corrected filing receipt is enclosed.

Telephone inquiries concerning this matter may be directed to the undersigned at (571) 272-3222.

/Kenya A. McLaughlin/

Kenya A. McLaughlin
Petitions Attorney
Office of Petitions

Enclosure: Corrected Filing Receipt

UNITED STATES PATENT AND TRADEMARK OFFICE

UNITED STATES DEPARTMENT OF COMMERCE
United States Patent and Trademark Office
Address: COMMISSIONER FOR PATENTS
P.O. Box 1450
Alexandria, Virginia 22313-1450
www.uspto.gov

APPLICATION NUMBER	FILING or 371(c) DATE	GRP ART UNIT	FIL FEE REC'D	ATTY.DOCKET.NO	TOT CLAIMS	IND CLAIMS
12/472,318	05/26/2009	3622	3116	26295-15521	48	5

CONFIRMATION NO. 7433

CORRECTED FILING RECEIPT

758
FENWICK & WEST LLP
SILICON VALLEY CENTER
801 CALIFORNIA STREET
MOUNTAIN VIEW, CA 94041

OC000000053708034

Date Mailed: 04/13/2012

Receipt is acknowledged of this non-provisional patent application. The application will be taken up for examination in due course. Applicant will be notified as to the results of the examination. Any correspondence concerning the application must include the following identification information: the U.S. APPLICATION NUMBER, FILING DATE, NAME OF APPLICANT, and TITLE OF INVENTION. Fees transmitted by check or draft are subject to collection. Please verify the accuracy of the data presented on this receipt. **If an error is noted on this Filing Receipt, please submit a written request for a Filing Receipt Correction. Please provide a copy of this Filing Receipt with the changes noted thereon. If you received a "Notice to File Missing Parts" for this application, please submit any corrections to this Filing Receipt with your reply to the Notice. When the USPTO processes the reply to the Notice, the USPTO will generate another Filing Receipt incorporating the requested corrections**

Applicant(s)

Robert Taaffe Lindsay, San Francisco, CA;
Thomas Giovanni Carriero, Menlo Park, CA;
Yun-Fang Juan, San Jose, CA;

Power of Attorney: The patent practitioners associated with Customer Number 00758

Domestic Priority data as claimed by applicant

Foreign Applications (You may be eligible to benefit from the **Patent Prosecution Highway** program at the USPTO. Please see http://www.uspto.gov for more information.)

If Required, Foreign Filing License Granted: 06/03/2009

The country code and number of your priority application, to be used for filing abroad under the Paris Convention, is **US 12/472,318**

Projected Publication Date: Not Applicable

Non-Publication Request: No

Early Publication Request: No

Title

Measuring Impact Of Online Advertising Campaigns

Preliminary Class

705

PROTECTING YOUR INVENTION OUTSIDE THE UNITED STATES

Since the rights granted by a U.S. patent extend only throughout the territory of the United States and have no effect in a foreign country, an inventor who wishes patent protection in another country must apply for a patent in a specific country or in regional patent offices. Applicants may wish to consider the filing of an international application under the Patent Cooperation Treaty (PCT). An international (PCT) application generally has the same effect as a regular national patent application in each PCT-member country. The PCT process **simplifies** the filing of patent applications on the same invention in member countries, but **does not result** in a grant of "an international patent" and does not eliminate the need of applicants to file additional documents and fees in countries where patent protection is desired.

Almost every country has its own patent law, and a person desiring a patent in a particular country must make an application for patent in that country in accordance with its particular laws. Since the laws of many countries differ in various respects from the patent law of the United States, applicants are advised to seek guidance from specific foreign countries to ensure that patent rights are not lost prematurely.

Applicants also are advised that in the case of inventions made in the United States, the Director of the USPTO must issue a license before applicants can apply for a patent in a foreign country. The filing of a U.S. patent application serves as a request for a foreign filing license. The application's filing receipt contains further information and guidance as to the status of applicant's license for foreign filing.

Applicants may wish to consult the USPTO booklet, "General Information Concerning Patents" (specifically, the section entitled "Treaties and Foreign Patents") for more information on timeframes and deadlines for filing foreign patent applications. The guide is available either by contacting the USPTO Contact Center at 800-786-9199, or it can be viewed on the USPTO website at http://www.uspto.gov/web/offices/pac/doc/general/index.html.

For information on preventing theft of your intellectual property (patents, trademarks and copyrights), you may wish to consult the U.S. Government website, http://www.stopfakes.gov. Part of a Department of Commerce initiative, this website includes self-help "toolkits" giving innovators guidance on how to protect intellectual property in specific countries such as China, Korea and Mexico. For questions regarding patent enforcement issues, applicants may call the U.S. Government hotline at 1-866-999-HALT (1-866-999-4158).

LICENSE FOR FOREIGN FILING UNDER

Title 35, United States Code, Section 184

Title 37, Code of Federal Regulations, 5.11 & 5.15

GRANTED

The applicant has been granted a license under 35 U.S.C. 184, if the phrase "IF REQUIRED, FOREIGN FILING LICENSE GRANTED" followed by a date appears on this form. Such licenses are issued in all applications where the conditions for issuance of a license have been met, regardless of whether or not a license may be required as

set forth in 37 CFR 5.15. The scope and limitations of this license are set forth in 37 CFR 5.15(a) unless an earlier license has been issued under 37 CFR 5.15(b). The license is subject to revocation upon written notification. The date indicated is the effective date of the license, unless an earlier license of similar scope has been granted under 37 CFR 5.13 or 5.14.

This license is to be retained by the licensee and may be used at any time on or after the effective date thereof unless it is revoked. This license is automatically transferred to any related applications(s) filed under 37 CFR 1.53(d). This license is not retroactive.

The grant of a license does not in any way lessen the responsibility of a licensee for the security of the subject matter as imposed by any Government contract or the provisions of existing laws relating to espionage and the national security or the export of technical data. Licensees should apprise themselves of current regulations especially with respect to certain countries, of other agencies, particularly the Office of Defense Trade Controls, Department of State (with respect to Arms, Munitions and Implements of War (22 CFR 121-128)); the Bureau of Industry and Security, Department of Commerce (15 CFR parts 730-774); the Office of Foreign AssetsControl, Department of Treasury (31 CFR Parts 500+) and the Department of Energy.

NOT GRANTED

No license under 35 U.S.C. 184 has been granted at this time, if the phrase "IF REQUIRED, FOREIGN FILING LICENSE GRANTED" DOES NOT appear on this form. Applicant may still petition for a license under 37 CFR 5.12, if a license is desired before the expiration of 6 months from the filing date of the application. If 6 months has lapsed from the filing date of this application and the licensee has not received any indication of a secrecy order under 35 U.S.C. 181, the licensee may foreign file the application pursuant to 37 CFR 5.15(b).

SelectUSA

The United States represents the largest, most dynamic marketplace in the world and is an unparalleled location for business investment, innovation and commercialization of new technologies. The USA offers tremendous resources and advantages for those who invest and manufacture goods here. Through SelectUSA, our nation works to encourage, facilitate, and accelerate business investment. To learn more about why the USA is the best country in the world to develop technology, manufacture products, and grow your business, visit SelectUSA.gov.

UNITED STATES PATENT AND TRADEMARK OFFICE

Commissioner for Patents
United States Patent and Trademark Office
P.O. Box 1450
Alexandria, VA 22313-1450
www.uspto.gov

Jellett Law, PS
Matthew Jellett, Esq.
910 Harris Ave
Suite A205
BELLINGHAM WA 98225

MAILED

MAR 22 2011

OFFICE OF PETITIONS

In re Application of	:	
PLATIS, Harry et al.	:	
Application No. 12/472,344	:	DECISION ON PETITION
Filed: May 26, 2009	:	TO WITHDRAW
Attorney Docket No. **P415575CIP**	:	FROM RECORD

This is a decision on the Request to Withdraw as attorney or agent of record under 37 C.F.R. § 1.36(b), filed March 12, 2011.

The request is **APPROVED**.

A grantable request to withdraw as attorney/agent of record must be signed by every attorney/agent seeking to withdraw or contain a clear indication that one attorney is signing on behalf of another/others. The Office requires the practitioner(s) requesting withdrawal to certify that he, she, or they have: (1) given reasonable notice to the client, prior to the expiration of the response period, that the practitioner(s) intends to withdraw from employment; (2) delivered to the client or a duly authorized representative of the client all papers and property (including funds) to which the client is entitled; and (3) notified the client of any responses that may be due and the time frame within which the client must respond, pursuant 37 CFR 10.40(c).

The request was signed by Matthew Jellett, the sole attorney of record. Matthew Jellett has been withdrawn as attorney or agent of record. Applicant is reminded that there is no attorney of record at this time.

All future correspondence will be directed to the first named inventor Harry Platis at the address indicated below.

Telephone inquiries concerning this decision should be directed to Tredelle Jackson at 571-272-2783.

/Tredelle D. Jackson/
Paralegal Specialist
Office of Petitions

cc: **HARRY PLATIS**
CEDAR VALLEY OFFICES
LYNNWOOD WA 98036

UNITED STATES PATENT AND TRADEMARK OFFICE

UNITED STATES DEPARTMENT OF COMMERCE
United States Patent and Trademark Office
Address: COMMISSIONER FOR PATENTS
P.O. Box 1450
Alexandria, Virginia 22313-1450
www.uspto.gov

APPLICATION NO.	FILING DATE	FIRST NAMED INVENTOR	ATTORNEY DOCKET NO.	CONFIRMATION NO.
12/472,421	05/27/2009	Shioya Kageyama	TMCT-10102/08	7628

25006 7590 03/29/2011
GIFFORD, KRASS, SPRINKLE,ANDERSON & CITKOWSKI, P.C
PO BOX 7021
TROY, MI 48007-7021

EXAMINER
BELLA, MATTHEW C

ART UNIT	PAPER NUMBER
2624	

MAIL DATE	DELIVERY MODE
03/29/2011	PAPER

Please find below and/or attached an Office communication concerning this application or proceeding.

The time period for reply, if any, is set in the attached communication.

UNITED STATES PATENT AND TRADEMARK OFFICE

Commissioner for Patents
United States Patent and Trademark Office
P.O. Box 1450
Alexandria, VA 22313-1450
www.uspto.gov

MAIL

MAR 29 2011

DIRECTOR'S OFFICE
TECHNOLOGY CENTER 2600

GIFFORD, KRASS, SPRINKLE,ANDERSON & CITKOWSKI, P.C
PO BOX 7021
TROY MI 48007-7021

In re Application of	:	
KAGEYAMA, SHIOYA et al.	:	DECISION ON REQUEST TO
Application No. 12/472,421	:	PARTICIPATE IN PATENT
Filed: May 27, 2009	:	PROSECUTION HIGHWAY
Attorney Docket No. TMCT-10102/08	:	PROGRAM AND PETITION
	:	TO MAKE SPECIAL UNDER
	:	37 CFR 1.102(a)

This is a decision on the request to participate in the Patent Prosecution Highway (PPH) program and the petition under 37 CFR 1.102(a), filed February 10, 2011 to make the above-identified application special.

The request and petition are **GRANTED**.

A grantable request to participate in the PPH program and petition to make special require:

(1) The U.S. application must validly claim priority under 35 U.S.C. 119(a) to one or more applications filed in the JPO;
(2) Applicant must submit a copy of the allowable/patentable claim(s) from the JPO application(s) along with an English translation thereof and a statement that the English translation is accurate;
(3) All the claims in the U.S. application must sufficiently correspond or be amended to sufficiently correspond to the allowable/patentable claim(s) in the JPO application(s);
(4) Examination of the U.S. application has not begun;
(5) Applicant must submit a copy of all the office actions from each of the JPO application(s) containing the allowable/patentable claim(s) along with an English translation thereof and a statement that the English translation is accurate; and
(6) Applicant must submit an IDS listing the documents cited by the JPO examiner in the JPO office action along with copies of documents except U.S. patents or U.S. patent application publications.

The request to participate in the PPH program and petition comply with the above requirements. Accordingly, the above-identified application has been accorded "special" status.

Telephone inquiries concerning this decision should be directed to Michael Horabik at 571-272-3068.

All other inquiries concerning the examination or status of the application should be directed to Patent Application Information Retrieval (PAIR) system.

The application is undergoing pre-examination processing. Once it is released for examination, the application will be forwarded to the examiner for action on the merits commensurate with this decision.

/Michael Horabik/

Michael Horabik
Quality Assurance Specialist
Technology Center 2600
Communications

UNITED STATES PATENT AND TRADEMARK OFFICE

UNITED STATES DEPARTMENT OF COMMERCE
United States Patent and Trademark Office
Address: COMMISSIONER FOR PATENTS
P.O. Box 1450
Alexandria, Virginia 22313-1450
www.uspto.gov

APPLICATION NO.	FILING DATE	FIRST NAMED INVENTOR	ATTORNEY DOCKET NO.	CONFIRMATION NO.
12/472,515	05/27/2009	Tadashi KOJIMA	09347/LH	7822

1933 7590 05/03/2011
HOLTZ, HOLTZ, GOODMAN & CHICK PC
220 Fifth Avenue
16TH Floor
NEW YORK, NY 10001-7708

EXAMINER
COLLINS, JASON M

ART UNIT	PAPER NUMBER
2833	

MAIL DATE	DELIVERY MODE
05/03/2011	PAPER

Please find below and/or attached an Office communication concerning this application or proceeding.

The time period for reply, if any, is set in the attached communication.

UNITED STATES PATENT AND TRADEMARK OFFICE

Commissioner for Patents
United States Patent and Trademark Office
P.O. Box 1450
Alexandria, VA 22313-1450
www.uspto.gov

HOLTZ, HOLTZ, GOODMAN & CHICK PC
220 Fifth Avenue
16TH Floor
NEW YORK NY 10001-7708

In re Application of	**: DECISION ON REQUEST TO**
Tadashi KOJIMA	**: PARTICIPATE IN THE PATENT**
Application No.: 12/472,515	**: PROSECUTION HIGHWAY**
Filed: 27 May 2009	**: PROGRAM AND PETITION**
Attorney Docket No.: 09347/LH	**: TO MAKE SPECIAL UNDER**
For: HAND POSITION DETECTING DEVICE AND HAND POSITION CONTROL METHOD	**: 37 CFR 1.102(a)**

This is a decision on the request to participate in the Patent Prosecution Highway (PPH) program and the petition under 37 CFR 1.102(a), filed 13 April 2011 to make the above-identified application special.

The request and petition are **GRANTED**.

Discussion

A grantable request to participate in the PPH pilot program and petition to make special require:

1. The U.S. application is

    a. a Paris Convention application which either
        i. validly claims priority under 35 U.S.C. 119(a) and 37 CFR 1.55 to one or more applications filed in the JPO, or
        ii. validly claims priority to a PCT application that contains no priority claims, or
    b. a national stage application under the PCT (an application which entered the national stage in the U.S. from a PCT international application after compliance with 35 U.S.C. 371), which PCT application
        i. validly claims priority to an application filed in the JPO, or
        ii. validly claims priority to a PCT application that contains no priority claims, or
        iii. contains no priority claim, or
    c. a so-called bypass application filed under 35 U.S.C. 111(a) which validly claims benefit under 35 U.S.C. 120 to a PCT application, which PCT application
        i. validly claims priority to an application filed in the JPO, or

ii. validly claims priority to a PCT application that contains no priority claims, or
iii. contains no priority claim;

2. Applicant must submit a copy of:
   a. The allowable/patentable claim(s) from the JPO application(s);
   b. An English translation of the allowable/patentable claim(s) and
   c. A statement that the English translation is accurate;
3. Applicant must:
   a. Ensure all the claims in the U.S. application must sufficiently correspond or be amended to sufficiently correspond to the allowable/patentable claim(s) in the JPO application(s) and
   b. Submit a claims correspondence table in English;
4. Examination of the U.S. application has <u>not</u> begun;
5. Applicant must submit:
   a. Documentation of prior office action:
      i. a copy of the office action(s) just prior to the "Decision to Grant a Patent" from each of the JPO application(s) containing the allowable/patentable claim(s) or
      ii. if the allowable/patentable claims(s) are from a "Notification of Reasons for Refusal" then the Notification of Reasons for Refusal or
      iii. if the JPO application is a first action allowance then no office action from the JPO is necessary should be indicated on the request/petition form;
   b. An English language translation of the JPO Office action from (5)(a)(i)-(ii) above
   c. A statement that the English translation is accurate;
6. Applicant must submit:
   a. An IDS listing the documents cited by the JPO examiner in the JPO office action (unless already submitted in this application)
   b. Copies of the documents except U.S. patents or U.S. patent application publications (unless already submitted in this application);

The request to participate in the PPH pilot program and petition comply with the above requirements. Accordingly, the above-identified application has been accorded "special" status.

Inquiries concerning this decision should be directed to Lee W. Young at 571-272-4549.

All other inquiries concerning the examination or status of the application is accessible in the PAIR system at http://www.uspto.gov/ebc.index.html.

This application will be forwarded to the examiner for action on the merits commensurate with this decision once this application's formality reviews have been completed.

Lee W. Young
TQAS, Technology Center 2800 – Semiconductors
Electrical & Optical Systems & Components

UNITED STATES PATENT AND TRADEMARK OFFICE

Commissioner for Patents
United States Patent and Trademark Office
P.O. Box 1450
Alexandria, VA 22313-1450
www.uspto.gov

LEASON ELLIS LLP
81 MAIN STREET
SUITE 503
WHITE PLAINS NY 10601

MAILED
FEB 22 2011
OFFICE OF PETITIONS

In re Application of :
Herzner :
Application No. 12/472,516 : DECISION
Filed/Deposited: 27 May, 2009 :
Attorney Docket No. 0171/0746-US1 :

This is a decision on the papers filed on 9 July, 2010, considered as a petition pursuant to 37 C.F.R. §1.181 (no fee) requesting withdrawal of the holding of abandonment in the above-identified application.

NOTE:

The papers considered as the instant petition were received into the Office of Petitions for determination only at this writing.

Petitioner has not followed the clear language of the guidance in the Commentary at MPEP §711.03(c)(I) as to the proper showing requirements for relief pursuant to 37 C.F.R. §1.181.

The record is silent as to any action by Petitioner in this matter (e.g., Status Inquiry) following the 9 July, 2010, submission of the instant petition.

The petition pursuant to 37 C.F.R. §1.181 is **DISMISSED**.

Any request for reconsideration of this decision must be submitted within TWO (2) MONTHS from the mail date of this decision. Extensions of time under 37 C.F.R. §1.136(a) are permitted. The reconsideration request should include a cover letter entitled "Renewed Petition pursuant to 37 C.F.R. §1.181."

This is **not** a final agency action within the meaning of 5 U.S.C. §704.

Application No. 12/472,516

As to the Request to Withdraw
the Holding of Abandonment

Petitioner is directed to the Commentary at MPEP §711.03(c)(I) for guidance as to the proper showing requirements for relief pursuant to 37 C.F.R. §1.181.

Petitioner appears not to comply with the guidance in the Commentary at MPEP §711.03(c)(I)—as discussed below, Petitioner has failed to satisfy the showing requirements set forth there. Petitioner may find it beneficial to review that material and move step-wise through that guidance in the effort to satisfy the showing requirements (statements and supporting documentation).

BACKGROUND

The record reflects as follows:

Petitioner failed to reply timely and properly to the Notice to File Missing Parts mailed on 10 June, 2009, with reply due absent extension of time on or before 10 August, 2009—and failed to reply properly and timely to the two subsequent Notices of Incomplete Reply mailed on 4 September, 2009, and 23 September, 2009—both with the same reply deadline.

Petitioner filed a partial, and so incomplete, reply to the 4 September, 2009, Notice on 22 September, 2009, with a request and fee for extension of time—and so extended the reply deadline to 10 October, 2009.

Petitioner filed no reply to the 23 September, 2009, Notice.

The application went abandoned by operation of law after midnight 10 October, 2009.

Petitioner filed his Power of Attorney on 24 December, 2009.

Thereafter, Petitioner submitted only a 28 December, 2010, request for refund of fees previously due and paid, which request was denied on 13 January, 2010.

The Office mailed the Notice of Abandonment on 11 June, 2010.

On 9 July, 2010, Petitioner filed, *inter alia*, the instant petition pursuant to 37 C.F.R. §1.181, and averred that he already had replied to the 4 September, 2009, Notice and that the 23 September, 2009, sought materials already submitted. Thus, Petitioner asserted, he did not need to respond to an Office action and/or Notice if he believed that no response is required. Petitioner, as one registered to practice before the Office, is aware that his assertion is not in concert with statute (35 U.S.C.), the Rules of Practice (37 C.F.R.) and Office policy (the Manual of Patent Examining Procedure (MPEP)).

Thus, Petitioner Counsel failed to make the showing as discussed below in the citation from the Manual of Patent Examining Procedure (MPEP).

With regard to Petitioner's request to withdraw the holding of abandonment pursuant to 37 C.F.R. §1.181, the guidance in the Commentary at MPEP §711.03(c)(I) provides in pertinent part as to non-receipt:

***

> The showing required to establish nonreceipt of an Office communication must include a statement from the practitioner describing the system used for recording an Office action received at the correspondence address of record with the USPTO. The statement should establish that the docketing system is sufficiently reliable. It is expected that the record would include, but not be limited to, the application number, attorney docket number, the mail date of the Office action and the due date for the response.
>
> Practitioner must state that the Office action was not received at the correspondence address of record, and that a search of the practitioner's record(s), including any file jacket or the equivalent, and the application contents, indicates that the Office action was not received. A copy of the record(s) used by the practitioner where the non-received Office action would have been entered had it been received is required.
>
> A copy of the practitioner's record(s) required to show non-receipt of the Office action should include the master docket for the firm. That is, if a three month period for reply was set in the nonreceived Office action, a copy of the master docket report showing all replies docketed for a date three months from the mail date of the nonreceived Office action must be submitted as documentary proof of nonreceipt of the Office action. If no such master docket exists, the practitioner should so state and provide other evidence such as, but not limited to, the following: the application file jacket; incoming mail log; calendar; reminder system; or the individual docket record for the application in question.[1]

***

With regard to Petitioner's request to withdraw the holding of abandonment pursuant to 37 C.F.R. §1.181, the guidance in the Commentary at MPEP §711.03(c)(I) provides in pertinent part as to timely fling:

***

> 37 C.F.R. §1.10(c) through §1.10(e) and §1.10(g) set forth procedures for petitioning the Director of the USPTO to accord a filing date to correspondence as of the date of deposit of the correspondence as "Express Mail." A petition to withdraw the holding of abandonment relying upon a timely reply placed in "Express Mail" must include an appropriate

[1] *See*: MPEP §711.03(c) (I)(A).

petition under 37 C.F.R. §1.10(c), (d), (e), or (g) (see MPEP §513). When a paper is shown to have been mailed to the Office using the "Express Mail" procedures, the paper must be entered in PALM with the "Express Mail" date.

Similarly, applicants may establish that a reply was filed with a postcard receipt that properly identifies the reply and provides *prima facie* evidence that the reply was timely filed. See MPEP §503. For example, if the application has been held abandoned for failure to file a reply to a first Office action, and applicant has a postcard receipt showing that an amendment was timely filed in response to the Office action, then the holding of abandonment should be withdrawn upon the filing of a petition to withdraw the holding of abandonment. When the reply is shown to have been timely filed based on a postcard receipt, the reply must be entered into PALM using the date of receipt of the reply as shown on the post card receipt.

Where a certificate of mailing under 37 C.F.R. §1.8, but not a postcard receipt, is relied upon in a petition to withdraw the holding of abandonment, see 37 C.F.R. 1.8(b) and MPEP §512. As stated in 37 C.F.R. §1.8(b)(3) the statement that attests to the previous timely mailing or transmission of the correspondence must be on a personal knowledge basis, or to the satisfaction of the Director of the USPTO. If the statement attesting to the previous timely mailing is not made by the person who signed the Certificate of Mailing (i.e., there is no personal knowledge basis), then the statement attesting to the previous timely mailing should include evidence that supports the conclusion that the correspondence was actually mailed (e.g., copies of a mailing log establishing that correspondence was mailed for that application). When the correspondence is shown to have been timely filed based on a certificate of mailing, the correspondence is entered into PALM with the actual date of receipt (i.e., the date that the duplicate copy of the papers was filed with the statement under 37 C.F.R. §1.8).

37 C.F.R. §1.8(b) also permits applicant to notify the Office of a previous mailing or transmission of correspondence and submit a statement under 37 C.F.R. §1.8(b)(3) accompanied by a duplicate copy of the correspondence when a reasonable amount of time (e.g., more than one month) has elapsed from the time of mailing or transmitting of the correspondence. Applicant does not have to wait until the application becomes abandoned before notifying the Office of the previous mailing or transmission of the correspondence. Applicant should check the private Patent Application Information Retrieval (PAIR) system for the status of the correspondence before notifying the Office. See MPEP §512. [2]

***

[2] *See*: MPEP §711.03(c) (I)(B).

A Petitioner unable to comply with and/or otherwise satisfy these requirements may wish to revive the application: Petitioner may wish to properly file a petition to the Commissioner requesting revival of an application abandoned due to unintentional delay under 37 C.F.R. §1.137(b). (See: http://www.uspto.gov/web/offices/pac/mpep/documents/0700_711_03_c.htm#sect711.03c)

Out of an abundance of caution, Petitioners always are reminded that the filing of a petition under 37 C.F.R. §1.181 does not toll any periods that may be running any action by the Office and a petition seeking relief under the regulation must be filed within two (2) months of the act complained of (*see*: 37 C.F.R. §1.181(f)), and those registered to practice and all others who make representations before the Office **must** inquire into the underlying facts of representations made to the Office and support averments with the appropriate documentation–since all owe to the Office the continuing duty to disclose.[3]

The availability of applications and application papers online to applicants/practitioners who diligently associate their Customer Number with the respective application(s) now provides an applicant/practitioner on-demand information as to events/transactions in an application.

STATUTES, REGULATIONS

Congress has authorized the Commissioner to "revive an application if the delay is shown to the satisfaction of the Commissioner to have been "unavoidable." 35 U.S.C. §133 (1994). And the regulations at 37 C.F.R. §1.137(a) and (b) set forth the requirements for a Petitioner to revive a previously unavoidably or unintentionally, respectively, abandoned application.[4],[5]

Moreover, the Office has set forth in the Commentary at MPEP §711.03(c)(I) the showing and timeliness requirements for a proper showing for relief under 37 C.F.R. §1.181 in these matters.

---

[3] See supplement of 17 June, 1999. The Patent and Trademark Office is relying on Petitioner's duty of candor and good faith and accepting a statement made by Petitioner. See Changes to Patent Practice and Procedure, 62 Fed. Reg. at 53160 and 53178, 1203 Off. Gaz. Pat. Office at 88 and 103 (responses to comments 64 and 109)(applicant obligated under 37 C.F.R. §10.18 to inquire into the underlying facts and circumstances when providing statements to the Patent and Trademark Office).

[4] See: Changes to Patent Practice and Procedure; Final Rule Notice, 62 Fed. Reg. at 53158-59 (October 10, 1997), 1203 Off. Gaz. Pat. Office at 86-87 (October 21, 1997).

[5] The language of 35 U.S.C. §133 and 37 C.F.R. §1.137(a) is clear, unambiguous, and without qualification: the delay in tendering the reply to the outstanding Office action, as well as filing the first petition seeking revival, must have been unavoidable for the reply now to be accepted on petition. (Therefore, by example, an unavoidable delay in the payment of the Filing Fee might occur if a reply is shipped by the US Postal Service, but due to catastrophic accident, the delivery is not made.) Delays in responding properly raise the question whether delays are unavoidable. Where there is a question whether the delay was unavoidable, Petitioners must meet the burden of establishing that the delay was unavoidable within the meaning of 35 U.S.C. §133 and 37 C.F.R. §1.137(a) And the Petitioner must be diligent in attending to the matter. Failure to do so does not constitute the care required under Pratt, and so cannot satisfy the test for diligence and due care. (By contrast, unintentional delays are those that do not satisfy the very strict statutory and regulatory requirements of unavoidable delay, and also, by definition, are not intentional.))

Decisions on reviving abandoned applications on the basis of "unavoidable" delay have adopted the reasonably prudent person standard in determining if the delay was unavoidable:

> The word 'unavoidable' . . . is applicable to ordinary human affairs, and requires no more or greater care or diligence than is generally used and observed by prudent and careful men in relation to their most important business. It permits them in the exercise of this care to rely upon the ordinary and trustworthy agencies of mail and telegraph, worthy and reliable employees, and such other means and instrumentalities as are usually employed in such important business. If unexpectedly, or through the unforeseen fault or imperfection of these agencies and instrumentalities, there occurs a failure, it may properly be said to be unavoidable, all other conditions of promptness in its rectification being present.[6]

Allegations as to the Request to
Withdraw the Holding of Abandonment

The guidance in the Commentary at MPEP §711.03(c)(I) specifies the showing required and how it is to be made and supported.

Petitioner appears not to have made the showing required.

CONCLUSION

Accordingly, the petition pursuant to 37 C.F.R. §1.181 is **dismissed**.

ALTERNATIVE VENUE

Should Petitioner wish to revive the application, Petitioner may wish to properly file a petition to the Commissioner requesting revival of an application abandoned due to unintentional delay pursuant to 37 C.F.R. §1.137(b). (See:
http://www.uspto.gov/web/offices/pac/mpep/documents/0700_711_03_c.htm#sect711.03c)

A petition to revive on the grounds of unintentional delay must be filed promptly and such petition must be accompanied by the reply, the petition fee, a terminal disclaimer and fee where appropriate and a statement that "the entire delay in filing the required reply from the due date for

[6] In re Mattullath, 38 App. D.C. 497, 514-15 (1912)(quoting Ex parte Pratt, 1887 Dec. Comm'r Pat. 31, 32-33 (1887)); see also Winkler v. Ladd, 221 F. Supp. 550, 552, 138 USPQ 666, 167-68 (D.D.C. 1963), aff'd, 143 USPQ 172 (D.C. Cir. 1963); Ex parte Henrich, 1913 Dec. Comm'r Pat. 139, 141 (1913). In addition, decisions on revival are made on a "case-by-case basis, taking all the facts and circumstances into account." Smith v. Mossinghoff, 671 F.2d 533, 538, 213 USPQ 977, 982 (D.C. Cir. 1982). Finally, a petition cannot be granted where a petitioner has failed to meet his or her burden of establishing that the delay was "unavoidable." Haines v. Quigg, 673 F. Supp. 314, 316-17, 5 USPQ2d 1130, 1131-32 (N.D. Ind. 1987).

the reply until the filing of a grantable petition was unintentional." (The statement is in the form available online.)

Further correspondence with respect to this matter should be addressed as follows:

By Mail: Mail Stop PETITION
Commissioner for Patents
P. O. Box 1450
Alexandria, VA 22313-1450

By hand: U. S. Patent and Trademark Office
Customer Service Window, Mail Stop Petitions
Randolph Building
401 Dulany Street
Alexandria, VA 22314

By facsimile: **(571) 273-8300**
Attn: Office of Petitions

Telephone inquiries regarding this decision may be directed to the undersigned at (571) 272-3214—it is noted, however, that all practice before the Office is in writing (see: 37 C.F.R. §1.2[7]) and the proper authority for action on any matter in this regard are the statutes (35 U.S.C.), regulations (37 C.F.R.) and the commentary on policy (MPEP). Therefore, no telephone discussion may be controlling or considered authority for Petitioner's action(s).

/John J. Gillon, Jr./
John J. Gillon, Jr.
Senior Attorney
Office of Petitions

[7] The regulations at 37 C.F.R. §1.2 provide:
§1.2 Business to be transacted in writing.
All business with the Patent and Trademark Office should be transacted in writing. The personal attendance of applicants or their attorneys or agents at the Patent and Trademark Office is unnecessary. The action of the Patent and Trademark Office will be based exclusively on the written record in the Office. No attention will be paid to any alleged oral promise, stipulation, or understanding in relation to which there is disagreement or doubt.

UNITED STATES PATENT AND TRADEMARK OFFICE

UNITED STATES DEPARTMENT OF COMMERCE
United States Patent and Trademark Office
Address: COMMISSIONER FOR PATENTS
P.O. Box 1450
Alexandria, Virginia 22313-1450
www.uspto.gov

12/472,516 05/27/2009 Daniel Herzner

CONFIRMATION NO. 7823

88329
Daniel Herzner
90 Seneca Ave
White Plains, NY 10603

Date Mailed: 9-23-09

NOTICE OF INCOMPLETE REPLY

Filing Date Granted

Applicant's reply to the Notice mailed on 09/04/09 was received in the U.S. Patent and Trademark Office on 09/11/09 and has been entered into the application. The reply, however, does not include the following item(s) required in the Notice.

The period for reply continues to run from the mailing date of the prior Notice. The item(s) listed below must be timely filed to avoid abandonment of the application. No new time period for reply is provided in this communication. If the period for reply set forth in the prior Notice has expired, this application will become abandoned unless applicant: (1) submits the following checked item(s), **and** (2) obtains an extension of time under 37 CFR 1. 136(a) (including the appropriate fee (37 CFR 1.17(a)). In no case may an applicant obtain an extension of time for more than FIVE (5) MONTHS beyond the date for reply set forth in the prior Notice.

A complete reply which includes the following checked item(s) must be timely filed to prevent ABANDONMENT of the above-identified application:

- ☐ A substitute specification.
- ☒ A statement that the substitute specification contains no new matter.
- ☐ A replacement abstract commencing on a separate sheet in compliance with 37 CFR 1.72(b) and 1.121 (deleting the drawings or flow diagrams).
- ☐ New and replacement drawing sheets.
- ☐ Replacement drawing sheets with the figures renumbered.
- ☐ A complete claim listing or a replacement claim listing with the claims renumbered.
- ☐ An amendment to the claims in compliance with 37 CFR 1.121 (deleting the drawings or flow diagrams).
- ☐ A replacement transmittal letter listing all of the files except the missing or unreadable file.
- ☐ A duplicate copy of the CD.
- ☐ A statement that the replacement CD contains no new matter.

UNITED STATES PATENT AND TRADEMARK OFFICE

UNITED STATES DEPARTMENT OF COMMERCE
United States Patent and Trademark Office
Address: COMMISSIONER FOR PATENTS
P.O. Box 1450
Alexandria, Virginia 22313-1450
www.uspto.gov

Replies should be mailed to: Mail Stop Missing Parts
Commissioner for Patents
P.O. Box 1450
Alexandria VA 22313-1450

Registered users of EFS-Web may alternatively submit their reply to this notice via EFS-Web.
https://sportal.uspto.gov/authenticate/AuthenticateUserLocalEPF.html

For more information about EFS-Web, please call the USPTO Electronic Business Center at 1-866-217-9197 or visit our website at http://www.uspto.gov/ebc.

B. 2

Application Assistance Unit (571) 272-4200

UNITED STATES PATENT AND TRADEMARK OFFICE

UNITED STATES DEPARTMENT OF COMMERCE
United States Patent and Trademark Office
Address: COMMISSIONER FOR PATENTS
P.O. Box 1450
Alexandria, Virginia 22313-1450
www.uspto.gov

12/472,516 05/27/2009 Daniel Herzner

CONFIRMATION NO. 7823

88329
Daniel Herzner
90 Seneca Ave
White Plains, NY 10603

Date Mailed: 9-23-09

NOTICE OF INCOMPLETE REPLY

Filing Date Granted

Applicant's reply to the Notice mailed on 09/04/09 was received in the U.S. Patent and Trademark Office on 09/11/09 and has been entered into the application. The reply, however, does not include the following item(s) required in the Notice.

The period for reply continues to run from the mailing date of the prior Notice. The item(s) listed below must be timely filed to avoid abandonment of the application. No new time period for reply is provided in this communication. If the period for reply set forth in the prior Notice has expired, this application will become abandoned unless applicant: (1) submits the following checked item(s), **and** (2) obtains an extension of time under 37 CFR 1. 136(a) (including the appropriate fee (37 CFR 1.17(a)). In no case may an applicant obtain an extension of time for more than FIVE (5) MONTHS beyond the date for reply set forth in the prior Notice.

A complete reply which includes the following checked item(s) must be timely filed to prevent ABANDONMENT of the above-identified application:

- ☐ A substitute specification.
- ☒ A statement that the substitute specification contains no new matter.
- ☐ A replacement abstract commencing on a separate sheet in compliance with 37 CFR 1.72(b) and 1.121 (deleting the drawings or flow diagrams).
- ☐ New and replacement drawing sheets.
- ☐ Replacement drawing sheets with the figures renumbered.
- ☐ A complete claim listing or a replacement claim listing with the claims renumbered.
- ☐ An amendment to the claims in compliance with 37 CFR 1.121 (deleting the drawings or flow diagrams).
- ☐ A replacement transmittal letter listing all of the files except the missing or unreadable file.
- ☐ A duplicate copy of the CD.
- ☐ A statement that the replacement CD contains no new matter.

UNITED STATES PATENT AND TRADEMARK OFFICE

UNITED STATES DEPARTMENT OF COMMERCE
United States Patent and Trademark Office
Address: COMMISSIONER FOR PATENTS
P.O. Box 1450
Alexandria, Virginia 22313-1450
www.uspto.gov

Replies should be mailed to: Mail Stop Missing Parts
Commissioner for Patents
P.O. Box 1450
Alexandria VA 22313-1450

Registered users of EFS-Web may alternatively submit their reply to this notice via EFS-Web. https://sportal.uspto.gov/authenticate/AuthenticateUserLocalEPF.html

For more information about EFS-Web, please call the USPTO Electronic Business Center at 1-866-217-9197 or visit our website at http://www.uspto.gov/ebc.

B. 2

Application Assistance Unit (571) 272-4200

UNITED STATES PATENT AND TRADEMARK OFFICE

Commissioner for Patents
United States Patent and Trademark Office
P.O. Box 1450
Alexandria, VA 22313-1450
www.uspto.gov

LEASON ELLIS LLP
81 MAIN STREET
SUITE 503
WHITE PLAINS NY 10601

MAILED
MAY 3 1 2011
OFFICE OF PETITIONS

In re Application of	:	
Herzner	:	
Application No. 12/472,516	:	DECISION
Filed/Deposited: 27 May, 2009	:	
Attorney Docket No. 0171/0746-US1	:	

This is a decision on the petition filed on 15 March, 2011, pursuant to 37 C.F.R. §1.137(b) for revival of an application abandoned due to unintentional delay.

The petition pursuant to 37 C.F.R. §1.137(b) is **GRANTED**.

As to the Allegations
of Unintentional Delay

The requirements of a grantable petition pursuant to 37 C.F.R. §1.137(b) are the petition and fee therefor, a reply, a proper statement and/or showing of unintentional delay under the regulation, and, where applicable, a terminal disclaimer and fee

Petitioners' attentions always are directed to the guidance in the Commentary at MPEP §711.03(c)(II).

BACKGROUND

The record reflects as follows:

Petitioner failed to reply timely and properly to the Notice to File Missing Parts mailed on 10 June, 2009, with reply due absent extension of time on or before 10 August, 2009—and failed to reply properly and timely to the two subsequent Notices of Incomplete Reply mailed on 4 September, 2009, and 23 September, 2009—both with the same reply deadline.

Petitioner filed a partial, and so incomplete, reply to the 4 September, 2009, Notice on 22 September, 2009, with a request and fee for extension of time—and so extended the reply deadline to 10 October, 2009.

Petitioner filed no reply to the 23 September, 2009, Notice.

The application went abandoned by operation of law after midnight 10 October, 2009.

Petitioner filed his Power of Attorney on 24 December, 2009.

Thereafter, Petitioner submitted only a 28 December, 2010, request for refund of fees previously due and paid, which request was denied on 13 January, 2010.

The Office mailed the Notice of Abandonment on 11 June, 2010.

On 9 July, 2010, Petitioner filed, *inter alia*, a petition pursuant to 37 C.F.R. §1.181, and averred that he had replied to the 4 September, 2009, Notice and that the 23 September, 2009, Notice sought materials already submitted. Thus, Petitioner asserted, he did not need to respond to an Office action and/or Notice because believed that no response is required. Petitioner, as one registered to practice before the Office, was aware that his assertion is not in concert with statute (35 U.S.C.), the Rules of Practice (37 C.F.R.) and Office policy (the Manual of Patent Examining Procedure (MPEP)). Because Petitioner Counsel failed to make the showing as discussed below in the citation from the Manual of Patent Examining Procedure (MPEP) the petition was dismissed on 22 February, 2011.

On 15 March, 2011, Petitioner filed, *inter alia*, a petition with fee pursuant to 37 C.F.R. §1.137(b), what is represented as a reply to the 23 September, 2009, Notice (though dated 22 September, 2009), and made the statement of unintentional delay.

The availability of applications and application papers online to applicants/practitioners who diligently associate their Customer Number with the respective application(s) now provides an applicant/practitioner on-demand information as to events/transactions in an application.

Out of an abundance of caution, Petitioners always are reminded that those registered to practice and all others who make representations before the Office **must** inquire into the underlying facts of representations made to the Office and support averments with the appropriate documentation–since all owe to the Office the continuing duty to disclose.[1]

---

[1] See supplement of 17 June, 1999. The Patent and Trademark Office is relying on petitioner's duty of candor and good faith and accepting a statement made by Petitioner. See Changes to Patent Practice and Procedure, 62 Fed. Reg. at 53160 and 53178, 1203 Off. Gaz. Pat. Office at 88 and 103 (responses to comments 64 and 109)(applicant obligated under 37 C.F.R. §11.18 to inquire into the underlying facts and circumstances when providing statements to the Patent and Trademark Office).

STATUTES, REGULATIONS AND ANALYSIS

Congress has authorized the Commissioner to "revive an application if the delay is shown to the satisfaction of the Commissioner to have been "unavoidable." 35 U.S.C. §133 (1994).[2]
The regulations at 37 C.F.R. §1.137(a) and (b) set forth the requirements for a Petitioner to revive a previously unavoidably or unintentionally, respectively, abandoned application under this congressional grant of authority.

Unintentional delays are those that do not satisfy the very strict statutory and regulatory requirements of unavoidable delay, and, by definition, are not intentional.[3]))

As to Allegations of Unintentional Delay

The requirements of a grantable petition pursuant to 37 C.F.R. §1.137(b) are the petition and fee therefor, a reply, a proper statement of unintentional delay under the regulation, and, where applicable, a terminal disclaimer and fee.

It appears that the requirements under the rule have been satisfied.

CONCLUSION

Accordingly, the petition pursuant to 37 C.F.R. §1.137(b) is **granted**.

The instant application is released to the Office of Patent Application Processing (OPAP) for further processing in due course.

Petitioner may find it beneficial to view Private PAIR within a fortnight of the instant decision to ensure that the revival has been acknowledged by the OPAP in response to this decision. It is noted that all inquiries with regard to status need be directed to the OPAP where that change of status must be effected—that does not occur in the Office of Petitions.

---

[2] 35 U.S.C. §133 provides:
35 U.S.C. §133 Time for prosecuting application.
Upon failure of the applicant to prosecute the application within six months after any action therein, of which notice has been given or mailed to the applicant, or within such shorter time, not less than thirty days, as fixed by the Commissioner in such action, the application shall be regarded as abandoned by the parties thereto, unless it be shown to the satisfaction of the Commissioner that such delay was unavoidable.

[3] Therefore, by example, an unintentional delay in the reply might occur if the reply and transmittal form are to be prepared for shipment by the US Postal Service, but other pressing matters distract one's attention and the mail is not timely deposited for shipment.

Telephone inquiries regarding this decision may be directed to the undersigned at (571) 272-3214—it is noted, however, that all practice before the Office is in writing (see: 37 C.F.R. §1.2[4]) and the proper authority for action on any matter in this regard are the statutes (35 U.S.C.), regulations (37 C.F.R.) and the commentary on policy (MPEP). Therefore, no telephone discussion may be controlling or considered authority for Petitioner's action(s).

/John J. Gillon, Jr./
John J. Gillon, Jr.
Senior Attorney
Office of Petitions

[4] The regulations at 37 C.F.R. §1.2 provide:
§1.2 Business to be transacted in writing.
All business with the Patent and Trademark Office should be transacted in writing. The personal attdance of applicants or their attorneys or agents at the Patent and Trademark Office is unnecessary. The action of the Patent and Trademark Office will be based exclusively on the written record in the Office. No attention will be paid to any alleged oral promise, stipulation, or understanding in relation to which there is disagreement or doubt.

UNITED STATES PATENT AND TRADEMARK OFFICE

Commissioner for Patents
United States Patent and Trademark Office
P.O. Box 1450
Alexandria, VA 22313-1450
www.uspto.gov

REISING ETHINGTON PC
PO BOX 4390
TROY MI 48084

MAILED
MAR 12 2012
OFFICE OF PETITIONS

In re Application of	:	
Fengfeng Tao et al	:	
Application No. 12/472,556	:	DECISION GRANTING PETITION
Filed: May 27, 2009	:	UNDER 37 CFR 1.313(c)(2)
Attorney Docket No. 7134.3014.001	:	

This is a decision on the petition under 37 CFR 1.313(c)(2), filed March 12, 2012, to withdraw the above-identified application from issue after payment of the issue fee.

The petition is **GRANTED**.

The above-identified application is withdrawn from issue for consideration of a submission under 37 CFR 1.114 (request for continued examination). *See* 37 CFR 1.313(c)(2).

Petitioner is advised that the issue fee paid on February 14, 2012 cannot be refunded. If, however, this application is again allowed, petitioner may request that it be applied towards the issue fee required by the new Notice of Allowance.[1]

Telephone inquiries should be directed to the undersigned at (571) 272-3208.

This application is being referred to Technology Center AU 2837 for processing of the request for continued examination under 37 CFR 1.114 and for consideration of the concurrently filed IDS.

/Karen Creasy/
Karen Creasy
Petitions Examiner
Office of Petitions

[1] *The request to apply the issue fee to the new Notice may be satisfied by completing and returning the new Part B – Fee(s) Transmittal Form (along with any balance due at the time of submission). Petitioner is advised that the Issue Fee Transmittal Form* ***must*** *be completed and timely submitted to avoid abandonment of the application.*

UNITED STATES PATENT AND TRADEMARK OFFICE

UNITED STATES DEPARTMENT OF COMMERCE
United States Patent and Trademark Office
Address: COMMISSIONER FOR PATENTS
P.O. Box 1450
Alexandria, Virginia 22313-1450
www.uspto.gov

APPLICATION NO.	FILING DATE	FIRST NAMED INVENTOR	ATTORNEY DOCKET NO.	CONFIRMATION NO.
12/472,567	05/27/2009	Takahiko Endo	201252-0032-00 (439002)	7915

55694 7590 10/01/2010
DRINKER BIDDLE & REATH (DC)
1500 K STREET, N.W.
SUITE 1100
WASHINGTON, DC 20005-1209

EXAMINER
DECADY, ALBERT

ART UNIT	PAPER NUMBER
2121	

NOTIFICATION DATE	DELIVERY MODE
10/01/2010	ELECTRONIC

Please find below and/or attached an Office communication concerning this application or proceeding.

The time period for reply, if any, is set in the attached communication.

Notice of the Office communication was sent electronically on above-indicated "Notification Date" to the following e-mail address(es):

DBRIPDocket@dbr.com
penelope.mongelluzzo@dbr.com

UNITED STATES PATENT AND TRADEMARK OFFICE

Commissioner for Patents
United States Patent and Trademark Office
P.O. Box 1450
Alexandria, VA 22313-1450
www.uspto.gov

Drinker, Biddle & Reath (DC)
15 K Street N.W., Suite 1100
Washington, DC 20005-1209

In re Application of: ENDO et al.
Application No. 12/472,567
Filed: May 27, 2009
For: Numerical controller with tabular data for operating axes.

DECISION ON REQUEST TO PARTICIPATE IN PATENT PROSECUTION HIGHWAY PROGRAM AND PETITION TO MAKE SPECIAL UNDER 37 CFR 1.102(a)

This is a decision on the request to participate in the Patent Prosecution Highway (PPH) program and the petition under 37 CFR 1.102(a), filed July 30, 2010 to make the above-identified application special.

The petition is **GRANTED.**

A grantable request to participate in the PPH program and petition to make special require:

(1) The U.S. application is
(a) a Paris Convention application which either
(i) validly claims priority under 35 U.S.C. 119(a) and 37 CFR 1.55 to one or more applications filed in the JPO, or
(ii) validly claims priority to a PCT application that contains no priority claims,

Or

(b) a national stage application under the PCT (an application which entered the national stage in the U.S. from a PCT international application after compliance with 35 U.S.C. 371), which PCT application
(i) validly claims priority to an application filed in the JPO, or
(ii) validly claims priority to a PCT application that contains no priority claims, or
(iii) contains no priority claim,

Or

(c) a so-called bypass application filed under 35 U.S.C. 111 (a) which validly claims benefit under 35 U.S.C. 120 to a PCT application, which PCT application
(i) validly claims priority to an application filed in the JPO, or

(ii) validly claims priority to a PCT application that contains no priority claims, or
(iii) contains no priority claim.

Where the JPO application that contains the allowable/patentable claims is not the same application for which priority is claimed in the U.S. application, applicant must identify the relationship between the JPO application that contains the allowable/patentable claims and the JPO priority application claimed in the U.S. application.

(2) Applicant must submit a copy of:
a. The allowable/patentable claim(s) from the JPO application(s) or if a copy of the allowable/patentable claims is available via the Dossier Access System (DAS) applicant may request the USPTO obtain a copy from the DAS, however if the USPTO is unable to obtain a copy from the DAS the applicant will be required to submit a copy;
b. An English translation of the allowable/patentable claim(s) and
c. A statement that the English translation is accurate;

Effective January 29, 2010, for a period of two years ending on January 28, 2012, the USPTO will accept claims written in dependent form in the U.S. application which are narrower in scope than the allowable/patentable claims in the Japanese application.

(3) Applicant must:
a. Ensure all the claims in the U.S. application must sufficiently correspond or be amended to sufficiently correspond to the allowable/patentable claim(s) in the JPO application(s) and
b. Submit a claims correspondence table in English;

(4) Examination of the U.S. application has not begun;

(5) Applicant must submit:
a. Documentation of prior office action:
i. a copy of the office action(s)just prior to the "Decision to Grant a Patent" from each of the JPO application(s) containing the allowable/patentable claim(s) or
ii. if the allowable/patentable claims(s) are from a "Notification of Reasons for Refusal" then the Notification of Reasons for Refusal or
iii. if the JPO application is a first action allowance then no office action from the JPO is necessary should be indicated on the request/petition form;

Further, if a copy of the documents from a above is available via the Dossier Access System (DAS) applicant may request the USPTO obtain a copy from the DAS, however if the USPTO is unable to obtain a copy from the DAS the applicant will be required to submit a copy;

b. An English language translation of the JPO Office action from (5)(a)(i)-(ii) above

c. A statement that the English translation is accurate;

Effective January 29, 2010, Applicants may submit a machine translation into the English language of the copy of the latest JPO office action just prior to the "Decision to Grant a Patent" (e.g., the latest "Notification of Reasons for Refusal") from each of the JPO application(s) containing the allowable/patentable claims that are the basis for the PPH request. The machine translation into the English language must be one that is provided by the JPO. That is, the machine translation into the English language cannot be one that is provided by a commercial service. Where a machine translation into the English language of the copy of the latest JPO office action (obtained from the JPO) is submitted, it will not be necessary to include a statement that the English translation is accurate.

(6) Applicant must submit:
   a. An IDS listing the documents cited by the JPO examiner in the JPO office action (unless already submitted in this application)
   b. Copies of the documents except U.S. patents or U.S. patent application publications (unless already submitted in this application);

~~(7) The required petition fee under 37 CFR 1.17(h).~~

The petition is **GRANTED.**

The request to participate in the PPH pilot program and petition are found to comply with the above requirements. Accordingly, the above-identified application has been accorded "special" status.

Telephone inquiries concerning this decision should be directed to Mano Padmanabhan at 571-272-4210.

All other inquiries concerning the examination or status of the application is accessible in the PAIR system at http://www.uspto.gov/ebc/index.html.

The application is being forwarded to the examiner for action on the merits commensurate with this decision.

/Mano Padmanabhan/

Mano Padmanabhan
Quality Assurance Specialist, Technology Center 2100, Workgroup 2180
571-272-4210

UNITED STATES PATENT AND TRADEMARK OFFICE

Commissioner for Patents
United States Patent and Trademark Office
P.O. Box 1450
Alexandria, VA 22313-1450
www.uspto.gov

Decision Date : November 14,2011

In re Application of :

Mark Dzwonkiewicz

Application No : 12472568

Filed : 27-May-2009

Attorney Docket No : 921814-108505

DECISION ON REQUEST TO WITHDRAW AS ATTORNEY/AGENTOF RECORD

This is an electronic decision on the Request to Withdraw as attorney or agent of record under 37 CFR § 1.36(b), filed November 14,2011

The request is **APPROVED.**

The request was signed by Jeffrey R. Gray (registration no. 33391) on behalf of all attorneys/agents associated with Customer Number 23644 . All attorneys/agents associated with Cusotmer Number 23644 have been withdrawn.

Since there are no remaining attorneys of record, all future communications from the Office will be directed to the first named inventor or assignee that has properly made itself of record pursuant to 37 CFR 3.71, with correspondence address:

Name	Mark
Name2	Dzwonkiewicz
Address 1	769 Stonebridge Lane
Address 2	
City	Crystal Lake
State	IL
Postal Code	60014
Country	US

As a reminder, requester is required to inform the first named inventor or assignee that has properly made itself of record pursuant to 37 CFR 3.71 of the electronically processed petition.

Telephone inquiries concerning this decision should be directed to the Patent Electronic Business Center (EBC) at 866-217-9197.

Office of Petitions

Doc Code: PET.AUTO **Document Description: Petition automatically granted by EFS-Web**	PTO/SB/83 U.S. Patent and Trademark Office Department of Commerce

Electronic Petition Request	**REQUEST FOR WITHDRAWAL AS ATTORNEY OR AGENT AND CHANGE OF CORRESPONDENCE ADDRESS**
Application Number	12472568
Filing Date	27-May-2009
First Named Inventor	Mark Dzwonkiewicz
Art Unit	3733
Examiner Name	STUART BRAY
Attorney Docket Number	921814-108505
Title	Gear-Shaped Lifting Cap for a Laryngoscope

◉ Please withdraw me as attorney or agent for the above identified patent application and the practitioners of record associated with Customer Number: 23644

The reason(s) for this request are those described in 37 CFR:

10.40(b)(4)

Certifications

☒ I/We have given reasonable notice to the client, prior to the expiration of the response period, that the practitioner(s) intend to withdraw from employment

☒ I/We have delivered to the client or a duly authorized representative of the client all papers and property (including funds) to which the client is entitled

☒ I/We have notified the client of any responses that may be due and the time frame within which the client must respond

Change the correspondence address and direct all future correspondence to the first named inventor or assignee that has properly made itself of record pursuant to 37 CFR 3.71:

Name	Mark Dzwonkiewicz
Address	769 Stonebridge Lane
City	Crystal Lake
State	IL
Postal Code	60014
Country	US

I am authorized to sign on behalf of myself and all withdrawing practitioners.	
Signature	/Jeffrey R. Gray/
Name	Jeffrey R. Gray
Registration Number	33391

Customer No. 01933

Attorney Docket No. 09338/LH

This paper is being submitted via EFS-Web on January 28, 2011

In the event that this Paper is late filed, and the necessary petition for extension of time is not filed concurrently herewith, please consider this as a Petition for the requisite extension of time, and to the extent not already paid, authorization to charge the extension fee to Account No. 06-1378. In addition, authorization is hereby given to charge any fees for which payment has not been submitted, or to credit any overpayments, to Account No. 06-1378.

IN THE UNITED STATES PATENT AND TRADEMARK OFFICE

Applicant(s): Nobuo IIZUKA

Serial No. : 12/472,670

Confirm. No.: 8124

Filed : May 27, 2009

For : INFORMATION TRANSMITTING SYSTEM, INFORMATION DECODING APPARATUS, INFORMING METHOD AND RECORDING MEDIUM

Art Unit : 2613

Examiner : Kenneth N. Vanderpuye

REQUEST FOR PARTICIPATION IN THE PATENT PROSECUTION HIGHWAY (PPH) PROGRAM BETWEEN THE JPO AND THE USPTO

Commissioner for Patents
P.O. Box 1450
Alexandria, VA 22313-1450

Applicants hereby request participation in the Patent Prosecution Highway (PPH) Program and petition to make the above-identified application special under the PPH Program.

I. Eligibility of the Present Application for the PPH Program

Japanese Patent Application No. 2008-140704, filed May 29, 2008, contains allowed claims. The present application claims the benefit of priority of Japanese Patent Application No. 2008-140704. Accordingly, the present application is eligible for participation in the PPH Program.

II. Required Documents

A. A copy of the latest Office Action issued in Japanese Patent Application No. 2008-140704 is submitted herewith.

B. A copy of the claims determined to be patentable by the JPO in Japanese Patent Application No. 2008-140704 is submitted herewith.

C. English translations of the documents identified in A. and B. above, along with statements that the English translations are accurate, are submitted herewith.

D. The latest Japanese Office Action and the references cited therein (which were applied against the claims) have already been cited in Information Disclosure Statements filed May 27, 2009, and April 20, 2010. In addition, six documents cited in the latest Japanese Office Action (which were not applied against the

claims and which have not yet been cited in the present application) are submitted in the IDS filed herewith.

III. Claims Correspondence Table

Claims in U.S. Application	Corresponding Patentable Claim of JPO Application
11	1
12	2
13	3
14	4
15	5
16	5
17	6
18	7

Explanation Regarding Correspondence

The claims in the U.S. application correspond to the patentable Japanese claims as indicated above, with revisions to delete multiple dependencies, and with some formal and clarifying revisions. In particular, “means” and “step of” language has been avoided. In addition, new U.S. independent claim 18 has been revised to better comply with 35 USC 101. Still further, claim 11 has been revised to use the plural term “apparatuses” (instead of “apparatus”) for grammar and clarity, in view of the references in claim 11 to multiple light receiving positions.

IV. Claim Correspondence

All of the claims in the present U.S. application sufficiently correspond to the allowed claims in Japanese Patent Application No. 2008-140704.

* *

In view of the foregoing, applicant request participation in the PPH Program between the JPO and the USPTO and petition to make the above-identified application special under the PPH Program. If the Office has any comments, questions, objections or recommendations, the Office is invited to telephone the undersigned prompt action.

Respectfully submitted,

/Douglas Holtz/

Douglas Holtz
Reg. No. 33,902

Frishauf, Holtz, Goodman & Chick, P.C.
220 Fifth Avenue - 16th Floor
New York, New York 10001-7708
Tel. No. (212) 319-4900
Fax No. (212) 319-5101
DH:iv/dd
encs.

UNITED STATES PATENT AND TRADEMARK OFFICE

Commissioner for Patents
United States Patent and Trademark Office
P.O. Box 1450
Alexandria, VA 22313-1450
www.uspto.gov

MAIL

MAR 24 2011

DIRECTOR'S OFFICE
TECHNOLOGY CENTER 2600

HOLTZ, HOLTZ, GOODMAN & CHICK PC
220 Fifth Avenue
16TH Floor
NEW YORK NY 10001-7708

In re Application of	:	
IIZUKA, NOBUO	:	DECISION ON REQUEST TO
Application No. 12/472,670	:	PARTICIPATE IN PATENT
Filed: May 27, 2009	:	PROSECUTION HIGHWAY
Attorney Docket No. **09338/LH**	:	PROGRAM AND PETITION
	:	TO MAKE SPECIAL UNDER
	:	37 CFR 1.102(a)

This is a decision on the request to participate in the Patent Prosecution Highway (PPH) program and the petition under 37 CFR 1.102(a), filed January 28, 2011.

The request and petition are **GRANTED**.

A grantable request to participate in the PPH program and petition to make special require:

(1) The U.S. application must validly claim priority under 35 U.S.C. 119(a) to one or more applications filed in the JPO;
(2) Applicant must submit a copy of the allowable/patentable claim(s) from the JPO application(s) along with an English translation thereof and a statement that the English translation is accurate;
(3) All the claims in the U.S. application must sufficiently correspond or be amended to sufficiently correspond to the allowable/patentable claim(s) in the JPO application(s);
(4) Examination of the U.S. application has not begun;
(5) Applicant must submit a copy of all the office actions from each of the JPO application(s) containing the allowable/patentable claim(s) along with an English translation thereof and a statement that the English translation is accurate; and
(6) Applicant must submit an IDS listing the documents cited by the JPO examiner in the JPO office action along with copies of documents except U.S. patents or U.S. patent application publications.

The request to participate in the PPH program and petition comply with the above requirements. Accordingly, the above-identified application has been accorded "special" status.

Telephone inquiries concerning this decision should be directed to Kenneth Wieder at 571-272-2986.

All other inquiries concerning the examination or status of the application should be directed to Patent Application Information Retrieval (PAIR) system.

The application is being forwarded to the examiner for action on the merits commensurate with this decision.

/Kenneth A. Wieder/

Kenneth Wieder
Quality Assurance Specialist
Technology Center 2600
Communications

UNITED STATES PATENT AND TRADEMARK OFFICE

Commissioner for Patents
United States Patent and Trademark Office
P.O. Box 1450
Alexandria, VA 22313-1450
www.uspto.gov

BUHLER ASSOCIATES
BUHLER, KIRK A.
1101 CALIFORNIA AVE.
SUITE 208
CORONA CA 92881

MAILED
AUG 15 2011
OFFICE OF PETITIONS

In re Application of	:	
WILLIS, Lee P. et al.	:	
Application No. 12/472,694	:	DECISION ON PETITION
Filed: May 27, 2009	:	TO WITHDRAW
Attorney Docket No. **LW03-01U**	:	FROM RECORD
	:	

This is a decision on the Request to Withdraw as attorney or agent of record under 37 C.F.R. § 1.36(b), filed August 03, 2011.

The request is **APPROVED**.

A grantable request to withdraw as attorney/agent of record must be signed by every attorney/agent seeking to withdraw or contain a clear indication that one attorney is signing on behalf of another/others. The Office requires the practitioner(s) requesting withdrawal to certify that he, she, or they have: (1) given reasonable notice to the client, prior to the expiration of the response period, that the practitioner(s) intends to withdraw from employment; (2) delivered to the client or a duly authorized representative of the client all papers and property (including funds) to which the client is entitled; and (3) notified the client of any responses that may be due and the time frame within which the client must respond, pursuant 37 CFR 10.40(c).

The request was signed by Kirk Buhler on behalf of all attorneys of record who are associated with customer No. 37038. All attorneys/agents associated have been withdrawn. Applicant is reminded that there is no attorney of record at this time.

All future correspondence will be directed to the first named inventor Lee P. Willis at the address indicated below.

There are outstanding Office actions at this time.

Telephone inquiries concerning this decision should be directed to the undersigned at 571-272-4231.

Michelle R. Eason
Paralegal Specialist
Office of Petitions

cc: **LEE P. WILLIS**
20792 SPARKMAN LANE
HUNTINGTON BEACH, CA 92646

PTO/SB/20PCT-US (09-10)
Approved for use through 01/31/2012. OMB 0651-0058
U.S. Patent and Trademark Office; U. S. DEPARTMENT OF COMMERCE
Under the Paperwork Reduction Act of 1995, no persons are required to respond to a collection of information unless it displays a valid OMB control number.

REQUEST FOR PARTICIPATION IN THE PATENT COOPERATION TREATY - PATENT PROSECUTION HIGHWAY (PCT-PPH) PILOT PROGRAM IN A U.S. APPLICATION WHERE THE USPTO WAS THE ISA OR IPEA

Application No:	12/472,706	Filing date:	May 27, 2009
First Named Inventor:	Suresh Chitturi, et al.		
Title of the Invention:	SYSTEM AND METHOD FOR A CONVERGED NETWORK-BASED ADDRESS BOOK		

THIS REQUEST FOR PARTICIPATION IN THE PCT-PPH PILOT PROGRAM ALONG WITH THE REQUIRED DOCUMENTS MUST BE SUBMITTED VIA EFS-WEB. INFORMATION REGARDING EFS-WEB IS AVAILABLE AT HTTP://WWW.USPTO.GOV/EBC/EFS_HELP.HTML

APPLICANT HEREBY REQUESTS PARTICIPATION IN THE PCT-PPH PROGRAM AND PETITIONS TO MAKE THE ABOVE-IDENTIFIED APPLICATION SPECIAL UNDER THE PCT-PPH PROGRAM.

The above-identified application is (1) a national stage entry of the corresponding PCT application, or (2) a national stage entry of another PCT application which claims priority to the corresponding PCT application, or (3) a national application that claims domestic/ foreign priority to the corresponding PCT application, or (4) a national application which forms the basis for the priority claim in the corresponding PCT application, or (5) a continuing application of a U.S. application that satisfies one of (1) to (4) above, or (6) a U.S. application that claims domestic benefit to a U.S. provisional application which forms the basis for the priority claim in the corresponding PCT application.

The corresponding PCT application number(s) is/are: PCT/US2009/045267

The international date of the corresponding PCT application(s) is/are: 27 May 2009

I. List of Required Documents:

a. **A copy of the latest international work product (WO/ISA, WO/IPEA, or IPER) in the above–identified corresponding PCT application(s)**

- [x] Is attached
- [ ] Is not attached because the document is already in the U.S. application.

b. **A copy of all claims which were indicated as having novelty, inventive step and industrial applicability in the above-identified corresponding PCT application(s).**

- [x] Is attached.
- [ ] Is not attached because the document is already in the U.S. application.

c. **English translations of the documents in a. and b. above are attached (if the documents are not in the English language). A statement that the English translation is accurate is attached for the document in b. above.**

This collection of information is required by 35 U.S.C. 119, 37 CFR 1.55, and 37 CFR 1.102(d). The information is required to obtain or retain a benefit by the public, which is to file (and by the USPTO to process) an application. Confidentiality is governed by 35 U.S.C. 122 and 37 CFR 1.11 and 1.14. This collection is estimated to take 2 hours to complete, including gathering, preparing, and submitting the completed application form to the USPTO. Time will vary depending upon the individual case. Any comments on the amount of time you require to complete this form and/or suggestions for reducing this burden should be sent to the Chief Information Officer, U.S. Patent and Trademark Office, U.S. Department of Commerce, P.O. Box 1450, Alexandria, VA 22313-1450. DO NOT SEND FEES OR COMPLETED FORMS TO THIS ADDRESS.

Under the Paperwork Reduction Act of 1995, no persons are required to respond to a collection of information unless it displays a valid OMB control number.

REQUEST FOR PARTICIPATION IN THE PCT-PPH PILOT PROGRAM IN A U.S. APPLICATION WHERE THE USPTO WAS THE ISA OR IPEA

(continued)

Application No.:	12/472,706
First Named Inventor:	Suresh Chitturi, et al.

d. **(1) An information disclosure statement listing the documents cited in the international work products (ISR, WO/ISA, WO/IPEA, IPER) of the corresponding PCT application.**

☐ Is attached

☒ Has already been filed in the above-identified U.S. application on March 2, 2010

(2) Copies of all documents (except) for U.S. patents or U.S. patent application publications)

☐ Are attached.

☒ Have already been filed in the above-identified U.S. application on March 2, 2010

II. Claims Correspondence Table:

Claims in US Application	Patentable Claims in the corresponding PCT Application	Explanation regarding the correspondence
1	1	The scope of US claim 1 is the substantially the same as PCT claim 1 except the claim has been edited to promote clarity
3	3	The scope of US claim 3 is substantially the same as PCT claim 3
4	4	The scope of US claim 4 is substantially the same as PCT claim 4
5	5	The scope of US claim 5 is substantially the same as PCT claim 5 except the claim is edited to clarify "indirect interface"
6	6	The scope of US claim 6 is substantially the same as PCT claim 6
9	9	The scope of US claim 9 is substantially the same as PCT claim 9
10	10	The scope of US claim 10 is substantially the same as PCT claim 10 except the last feature is recited in dependent claim 26
11	11	The scope of US claim 11 is substantially the same as PCT claim 11
12	12	The scope of US claim 12 is substantially the same as PCT claim 12 except the claim has been edited to remove multiple dependency
15	15	The scope of US claim 15 is substantially the same as PCT claim 15 except the claim is edited to clarify "indirect interface"
16	16	The scope of US claim 16 is substantially the same as PCT claim 16
17	17	The scope of US claim 17 is substantially the same as PCT claim 17
18	18	The scope of US claim 18 is substantially the same as PCT claim 18 except the claim is edited to clarify "interworking"
26	10	The scope of US claim 26 is substantially the same as the last feature of PCT claim 10
27	11	The scope of US claim 27 is substantially the same as PCT claim 11
28	6, 15 and 16	The scope of US claim 29 is substantially the same as PCT claim 16

III. All the claims in the US application sufficiently correspond to the patentable claims in the corresponding PCT application.

Signature /david r. morris/	Date April 7, 2011
Name (Print/Typed) David R. Morris	Registration Number 53,348

Privacy Act Statement

The **Privacy Act of 1974 (P.L. 93-579)** requires that you be given certain information in connection with your submission of the attached form related to a patent application or patent. Accordingly, pursuant to the requirements of the Act, please be advised that: (1) the general authority for the collection of this information is 35 U.S.C. 2(b)(2); (2) furnishing of the information solicited is voluntary; and (3) the principal purpose for which the information is used by the U.S. Patent and Trademark Office is to process and/or examine your submission related to a patent application or patent. If you do not furnish the requested information, the U.S. Patent and Trademark Office may not be able to process and/or examine your submission, which may result in termination of proceedings or abandonment of the application or expiration of the patent.

The information provided by you in this form will be subject to the following routine uses:

1. The information on this form will be treated confidentially to the extent allowed under the Freedom of Information Act (5 U.S.C. 552) and the Privacy Act (5 U.S.C 552a). Records from this system of records may be disclosed to the Department of Justice to determine whether disclosure of these records is required by the Freedom of Information Act.
2. A record from this system of records may be disclosed, as a routine use, in the course of presenting evidence to a court, magistrate, or administrative tribunal, including disclosures to opposing counsel in the course of settlement negotiations.
3. A record in this system of records may be disclosed, as a routine use, to a Member of Congress submitting a request involving an individual, to whom the record pertains, when the individual has requested assistance from the Member with respect to the subject matter of the record.
4. A record in this system of records may be disclosed, as a routine use, to a contractor of the Agency having need for the information in order to perform a contract. Recipients of information shall be required to comply with the requirements of the Privacy Act of 1974, as amended, pursuant to 5 U.S.C. 552a(m).
5. A record related to an International Application filed under the Patent Cooperation Treaty in this system of records may be disclosed, as a routine use, to the International Bureau of the World Intellectual Property Organization, pursuant to the Patent Cooperation Treaty.
6. A record in this system of records may be disclosed, as a routine use, to another federal agency for purposes of National Security review (35 U.S.C. 181) and for review pursuant to the Atomic Energy Act (42 U.S.C. 218(c)).
7. A record from this system of records may be disclosed, as a routine use, to the Administrator, General Services, or his/her designee, during an inspection of records conducted by GSA as part of that agency's responsibility to recommend improvements in records management practices and programs, under authority of 44 U.S.C. 2904 and 2906. Such disclosure shall be made in accordance with the GSA regulations governing inspection of records for this purpose, and any other relevant (*i.e.*, GSA or Commerce) directive. Such disclosure shall not be used to make determinations about individuals.
8. A record from this system of records may be disclosed, as a routine use, to the public after either publication of the application pursuant to 35 U.S.C. 122(b) or issuance of a patent pursuant to 35 U.S.C. 151. Further, a record may be disclosed, subject to the limitations of 37 CFR 1.14, as a routine use, to the public if the record was filed in an application which became abandoned or in which the proceedings were terminated and which application is referenced by either a published application, an application open to public inspection or an issued patent.
9. A record from this system of records may be disclosed, as a routine use, to a Federal, State, or local law enforcement agency, if the USPTO becomes aware of a violation or potential violation of law or regulation.

UNITED STATES PATENT AND TRADEMARK OFFICE

UNITED STATES DEPARTMENT OF COMMERCE
United States Patent and Trademark Office
Address: COMMISSIONER FOR PATENTS
P.O. Box 1450
Alexandria, Virginia 22313-1450
www.uspto.gov

APPLICATION NO.	FILING DATE	FIRST NAMED INVENTOR	ATTORNEY DOCKET NO.	CONFIRMATION NO.
12/472,706	05/27/2009	Suresh Chitturi	33840-US-PAT	8194

54120 7590 05/04/2011
RESEARCH IN MOTION
ATTN: GLENDA WOLFE
BUILDING 6, BRAZOS EAST, SUITE 100
5000 RIVERSIDE DRIVE
IRVING, TX 75039

EXAMINER
TRAN, JIMMY H

ART UNIT	PAPER NUMBER
2456	

NOTIFICATION DATE	DELIVERY MODE
05/04/2011	ELECTRONIC

Please find below and/or attached an Office communication concerning this application or proceeding.

The time period for reply, if any, is set in the attached communication.

Notice of the Office communication was sent electronically on above-indicated "Notification Date" to the following e-mail address(es):

portfolioprosecution@rim.com

UNITED STATES PATENT AND TRADEMARK OFFICE

Commissioner for Patents
United States Patent and Trademark Office
P.O. Box 1450
Alexandria, VA 22313-1450
www.uspto.gov

RESEARCH IN MOTION
ATTN: GLENDA WOLFE
BUILDING 6, BRAZOS EAST, SUITE 100
5000 RIVERSIDE DRIVE
IRVING TX 75039

In re Application of: CHITTURI, ET AL.
Application No. 12472706
Filed: May 27, 2009
For: SYSTEM AND METHOD FOR A CONVERGED NETWORK-BASED ADDRESS BOOK

DECISION ON REQUEST TO PARTICIPATE IN PATENT PROSECUTION HIGHWAY PILOT PROGRAM AND PETITION TO MAKE SPECIAL UNDER 37 CFR 1.102(d)

This is a decision on the request to participate in the PCT-Patent Prosecution Highway (PPH) pilot program and the petition under 37 CFR 1.102(d), filed April 07, 2011 to make the above identified application special.

The petition is **DISMISSED AS MOOT**

A grantable request to participate in the PCT PPH program and petition to make special require:

1) The relationship between the corresponding U.S. application for which participation in the PCT-PPH pilot program is requested and the PCT application satisfies one of the following:

(a) The U.S. application is a national stage entry of the corresponding PCT application.

(b)The U.S. application is a national application which forms the basis for the priority claim in the corresponding PCT application.

(c) The U.S. application is a national stage entry of another PCT application (which can be filed in any competent receiving office) which claims priority to the corresponding PCT application.

(d) The U.S. application is a national application claiming foreign/domestic priority to the corresponding PCT application.

(e) The U.S. application is a continuing application (continuation, divisional, or continuation-in-part) of the U.S. application which satisfies one of the above (a) to (d) scenarios.

(2) The latest work product in the international phase of the PCT application corresponding to the U.S. application indicates at least one claim in the PCT application has novelty, inventive step and industrial applicability. In case any observation is described in Box VIII of the WO/ISA, or the WO/IPEA, or the IPER which forms the basis for the PCT-PPH request, applicant must identify and explain why the claim(s) is/are not subject to any observation described in Box VIII irrespective of whether an amendment is submitted to correct the observation described in Box VIII. The U.S. application will not be eligible to participate in the PCT-PPH pilot program if applicant does not identify and explain why the claim(s) is/are not subject to the observation described in Box VIII.

Applicant may not file a request to participate in the PCT-PPH pilot program on the basis of an International Search Report (ISR) only.

(3) Applicant must:
a. Ensure all the claims in the U.S. application sufficiently correspond or be amended to sufficiently correspond to one or more of those claims indicated as having novelty, inventive step and industrial applicability and free of any observation described in Box VIII in the latest work product of the corresponding PCT application and

b. Submit a claims correspondence table in English;

(4) **Substantive Examination of the U.S. application has not begun**;

(5) Applicant must submit a copy of:
a. the latest international work product, WO/ISA, or WO/IPEA or PER, which indicated that the claim(s) has/have novelty, inventive step and industrial applicability along with an English translation thereof if the copy of the latest international work product is not in the English language, unless the U.S. application and the corresponding PCT application satisfy the relationship noted in (1)(a) above.

(6) Applicant must submit a copy of:
a. the claims from the corresponding PCT application which were indicated as having novelty, inventive step and industrial applicability in the latest work product of the PCT application,
b. an English translation of the claims and
c. a statement that the English translation is accurate.

If the claims in the U.S. application are identical to the claims from the corresponding PCT application, and are in the English language, applicant may just indicate such in the PCT-PPH request and it will not be necessary for applicant to submit a copy of the claims from the corresponding PCT application.

(7) Applicant must submit:
a. An IDS listing the documents cited in the work products in the international phase of the PCT application corresponding to the U.S. application, namely the WO/ISA, or the WO/IPEA, or the IPER,(unless already submitted in this application)
b. Copies of the documents except U.S. patents or U.S. patent application publications (unless already submitted in this application);

(8) The request for participation in the PCT-PPH pilot program and all the supporting documents must be submitted to the USPTO via EFS-Web and indexed with the following document description: "Petition to make special under PCT-Patent Pros Hwy." Any preliminary amendments and IDS submitted with the PCT-PPH documents must be separately indexed as a preliminary amendment and IDS, respectively.

The request to participate in the PCT PPH pilot program and petition failed item (4) above, because examination of the application has already begun.

Since examination of the application has already begun, the Petition is **DISMISSED AS MOOT**.

Telephone inquiries concerning this decision should be directed to Kim Huynh at 571-272-4147.

All other inquiries concerning the examination or status of the application is accessible in the PAIR system at http://www.uspto.gov/ebc/index.html.

The application is being forwarded to the examiner for action on the merits commensurate with this decision.

/Kim Huynh/

Kim Huynh
Quality Assurance Specialist,
Technology Center 2400

UNITED STATES PATENT AND TRADEMARK OFFICE

Commissioner for Patents
United States Patent and Trademark Office
P.O. Box 1450
Alexandria, VA 22313-1450
www.uspto.gov

LADAS & PARRY LLP
224 SOUTH MICHIGAN AVENUE
SUITE 1600
CHICAGO IL 60604

MAILED

MAY 19 2011

OFFICE OF PETITIONS

In re Application of	:	
Joon Seok Oh et al	:	
Application No. 12/472,721	:	DECISION GRANTING PETITION
Filed: May 27, 2009	:	UNDER 37 CFR 1.313(c)(2)
Attorney Docket No. CU-7419 WWP	:	

This is a decision on the petition under 37 CFR 1.313(c)(2), filed May 18, 2011, to withdraw the above-identified application from issue after payment of the issue fee.

The petition is **GRANTED**.

The above-identified application is withdrawn from issue for consideration of a submission under 37 CFR 1.114 (request for continued examination). *See* 37 CFR 1.313(c)(2).

Petitioner is advised that the issue fee paid on April 18, 2011 cannot be refunded. If, however, this application is again allowed, petitioner may request that it be applied towards the issue fee required by the new Notice of Allowance.[1]

Telephone inquiries should be directed to the undersigned at (571) 272-3208.

This application is being referred to Technology Center AU 2812 for processing of the request for continued examination under 37 CFR 1.114 and for consideration of the concurrently filed IDS.

/Karen Creasy/
Karen Creasy
Petitions Examiner
Office of Petitions

---

[1] *The request to apply the issue fee to the new Notice may be satisfied by completing and returning the new Part B – Fee(s) Transmittal Form (along with any balance due at the time of submission). Petitioner is advised that the Issue Fee Transmittal Form* ***must*** *be completed and timely submitted to avoid abandonment of the application.*

Doc Code: PET.AUTO Document Description: Petition automatically granted by EFS-Web	PTO/SB/140 U.S. Patent and Trademark Office Department of Commerce

Electronic Petition Request	**PETITION TO WITHDRAW AN APPLICATION FROM ISSUE AFTER PAYMENT OF THE ISSUE FEE UNDER 37 CFR 1.313(c)**
Application Number	12472738
Filing Date	27-May-2009
First Named Inventor	David Bar-Or
Art Unit	1627
Examiner Name	SARAH PIHONAK
Attorney Docket Number	6134-104
Title	THERAPEUTIC METHODS AND COMPOUNDS

An application may be withdrawn from issue for further action upon petition by the applicant. To request that the Office withdraw an application from issue, applicant must file a petition under this section including the fee set forth in § 1.17(h) and a showing of good and sufficient reasons why withdrawal of the application from issue is necessary.

APPLICANT HEREBY PETITIONS TO WITHDRAW THIS APPLICATION FROM ISSUE UNDER 37 CFR 1.313(c).

A grantable petition requires the following items:
(1) Petition fee; and
(2) One of the following reasons:
(a) Unpatentability of one or more claims, which must be accompanied by an unequivocal statement that one or more claims are unpatentable, an amendment to such claim or claims, and an explanation as to how the amendment causes such claim or claims to be patentable;
(b) Consideration of a request for continued examination in compliance with § 1.114 (for a utility or plant application only); or
(c) Express abandonment of the application. Such express abandonment may be in favor of a continuing application, but not a CPA under 37 CFR 1.53(d).

Petition Fee

☐ Applicant claims SMALL ENTITY status. See 37 CFR 1.27.

☐ Applicant is no longer claiming SMALL ENTITY status. See 37 CFR 1.27(g)(2).

☒ Applicant(s) status remains as SMALL ENTITY.

☐ Applicant(s) status remains as other than SMALL ENTITY

Reason for withdrawal from issue

- (●) One or more claims are unpatentable
- ( ) Consideration of a request for continued examination (RCE) (List of Required Documents and Fees)
- ( ) Applicant hereby expressly abandons the instant application (any attorney/agent signing for this reason must have power of attorney pursuant to 37 CFR 1.32(b)).

- [ ] I certify, in accordance with 37 CFR 1.4(d)(4) that the amendment and explanation have already been filed in the above-identified application on
- [x] Amendment and explanation are attached

THIS PORTION MUST BE COMPLETED BY THE SIGNATORY OR SIGNATORIES

I certify, in accordance with 37 CFR 1.4(d)(4) that I am:

- (●) An attorney or agent registered to practice before the Patent and Trademark Office who has been given power of attorney in this application.
- ( ) An attorney or agent registered to practice before the Patent and Trademark Office, acting in a representative capacity.
- ( ) A sole inventor
- ( ) A joint inventor; I certify that I am authorized to sign this submission on behalf of all of the inventors
- ( ) A joint inventor; all of whom are signing this e-petition
- ( ) The assignee of record of the entire interest that has properly made itself of record pursuant to 37 CFR 3.71

Signature	/Robert D. Traver/
Name	Robert D. Traver
Registration Number	47999

UNITED STATES PATENT AND TRADEMARK OFFICE

Commissioner for Patents
United States Patent and Trademark Office
P.O. Box 1450
Alexandria, VA 22313-1450
www.uspto.gov

Decision Date : February 22, 2012

In re Application of :

David Bar-Or

Application No : 12472738

Filed : 27-May-2009

Attorney Docket No : 6134-104

DECISION ON PETITION

UNDER CFR 1.313(c)(1)

This is an electronic decision on the petition under 37 CFR 1.313(c)(1), filed February 22, 2012 , to withdraw the above-identified application from issue after payment of the issue fee.

The petition is **GRANTED.**

37 CFR 1.313(c) provides that:

Once the issue fee has been paid, the application will not be withdrawn from issue upon petition by the applicant for any reason except:

(1) Unpatentability of one of more claims, which petition must be accompanied by an unequivocal statement that one or more claims are unpatentable, an amendment to such claim or claims, and an explanation as to how the amendment causes such claim or claims to be patentable;
(2) Consideration of a request for continued examination in compliance with 37 CFR 1.114; or
(3) Express abandonment of the application. Such express abandonment may be in favor of a continuing application.

The petition complies with the requirements of 37 CFR 1.313(c)(1). Accordingly, the above-identified application is withdrawn from issue.

Petitioner is advised that the issue fee paid in this application cannot be refunded. If, however, this application is again allowed, petitioner may request that it be applied towards the issue fee required by the new Notice of Allowance.

The application is being referred to Technology Center AU 1627 for consideration of the amendment submitted with the petition.

Telephone inquiries concerning this decision should be directed to the Patent Electronic Business Center (EBC) at 866-217-9197.

Office of Petitions

UNITED STATES PATENT AND TRADEMARK OFFICE

Commissioner for Patents
United States Patent and Trademark Office
P.O. Box 1450
Alexandria, VA 22313-1450
www.uspto.gov

MAILED

MAR 15 2011

OFFICE OF PETITIONS

DERGOSITS & NOAH LLP
Three Embarcadero Center
Suite 410
SAN FRANCISCO CA 94111

In re Application of	:	
Chee et al	:	
Application No. 12/472,863	:	DECISION ON PETITION
Filed: May 27, 2009	:	
Attorney Docket No. 1198.06	:	

This is a decision on the petition under 37 CFR 1.182, filed February 8, 2011, to change the order of the names of the inventors.

The petition is **GRANTED**.

Office records have been corrected to reflect the change in the order of the named inventors. A corrected Filing Receipt, which sets forth the desired order of the named inventors, accompanies this decision on petition.

As authorized, the $400 fee for the petition under 37 CFR 1.182 has been assessed to petitioner's deposit account.

This application is being referred to Technology Center AU 2473 for examination in due course.

Telephone inquiries regarding this decision should be directed to the undersigned at (571) 272-3215.

Charlema Grant
Petitions Attorney
Office of Petitions

ATTACHMENT: Corrected Filing Receipt

UNITED STATES PATENT AND TRADEMARK OFFICE

UNITED STATES DEPARTMENT OF COMMERCE
United States Patent and Trademark Office
Address: COMMISSIONER FOR PATENTS
P.O. Box 1450
Alexandria, Virginia 22313-1450
www.uspto.gov

APPLICATION NUMBER	FILING or 371(c) DATE	GRP ART UNIT	FIL FEE REC'D	ATTY.DOCKET.NO	TOT CLAIMS	IND CLAIMS
12/472,863	05/27/2009	2473	527	1198.06	13	3

CONFIRMATION NO. 8485

CORRECTED FILING RECEIPT

8685
DERGOSITS & NOAH LLP
Three Embarcadero Center
Suite 410
SAN FRANCISCO, CA 94111

OC000000046565299

Date Mailed: 03/15/2011

Receipt is acknowledged of this non-provisional patent application. The application will be taken up for examination in due course. Applicant will be notified as to the results of the examination. Any correspondence concerning the application must include the following identification information: the U.S. APPLICATION NUMBER, FILING DATE, NAME OF APPLICANT, and TITLE OF INVENTION. Fees transmitted by check or draft are subject to collection. Please verify the accuracy of the data presented on this receipt. **If an error is noted on this Filing Receipt, please submit a written request for a Filing Receipt Correction. Please provide a copy of this Filing Receipt with the changes noted thereon. If you received a "Notice to File Missing Parts" for this application, please submit any corrections to this Filing Receipt with your reply to the Notice. When the USPTO processes the reply to the Notice, the USPTO will generate another Filing Receipt incorporating the requested corrections**

Applicant(s)

Lawrence Chee, Richmond, CANADA;
Balash Akbari, Vancouver, CANADA;

Assignment For Published Patent Application

MOBIDIA, INC., Richmond, CANADA

Power of Attorney: The patent practitioners associated with Customer Number 08685

Domestic Priority data as claimed by applicant

Foreign Applications (You may be eligible to benefit from the **Patent Prosecution Highway** program at the USPTO. Please see http://www.uspto.gov for more information.)

If Required, Foreign Filing License Granted: 06/03/2009

The country code and number of your priority application, to be used for filing abroad under the Paris Convention, is **US 12/472,863**

Projected Publication Date: Not Applicable

Non-Publication Request: No

Early Publication Request: No
**** SMALL ENTITY ****

Title

AGGREGATED SESSION MANAGEMENT METHOD AND SYSTEM

Preliminary Class

370

PROTECTING YOUR INVENTION OUTSIDE THE UNITED STATES

Since the rights granted by a U.S. patent extend only throughout the territory of the United States and have no effect in a foreign country, an inventor who wishes patent protection in another country must apply for a patent in a specific country or in regional patent offices. Applicants may wish to consider the filing of an international application under the Patent Cooperation Treaty (PCT). An international (PCT) application generally has the same effect as a regular national patent application in each PCT-member country. The PCT process **simplifies** the filing of patent applications on the same invention in member countries, but **does not result** in a grant of "an international patent" and does not eliminate the need of applicants to file additional documents and fees in countries where patent protection is desired.

Almost every country has its own patent law, and a person desiring a patent in a particular country must make an application for patent in that country in accordance with its particular laws. Since the laws of many countries differ in various respects from the patent law of the United States, applicants are advised to seek guidance from specific foreign countries to ensure that patent rights are not lost prematurely.

Applicants also are advised that in the case of inventions made in the United States, the Director of the USPTO must issue a license before applicants can apply for a patent in a foreign country. The filing of a U.S. patent application serves as a request for a foreign filing license. The application's filing receipt contains further information and guidance as to the status of applicant's license for foreign filing.

Applicants may wish to consult the USPTO booklet, "General Information Concerning Patents" (specifically, the section entitled "Treaties and Foreign Patents") for more information on timeframes and deadlines for filing foreign patent applications. The guide is available either by contacting the USPTO Contact Center at 800-786-9199, or it can be viewed on the USPTO website at http://www.uspto.gov/web/offices/pac/doc/general/index.html.

For information on preventing theft of your intellectual property (patents, trademarks and copyrights), you may wish to consult the U.S. Government website, http://www.stopfakes.gov. Part of a Department of Commerce initiative, this website includes self-help "toolkits" giving innovators guidance on how to protect intellectual property in specific countries such as China, Korea and Mexico. For questions regarding patent enforcement issues, applicants may call the U.S. Government hotline at 1-866-999-HALT (1-866-999-4158).

LICENSE FOR FOREIGN FILING UNDER

Title 35, United States Code, Section 184

Title 37, Code of Federal Regulations, 5.11 & 5.15

GRANTED

The applicant has been granted a license under 35 U.S.C. 184, if the phrase "IF REQUIRED, FOREIGN FILING LICENSE GRANTED" followed by a date appears on this form. Such licenses are issued in all applications where the conditions for issuance of a license have been met, regardless of whether or not a license may be required as

set forth in 37 CFR 5.15. The scope and limitations of this license are set forth in 37 CFR 5.15(a) unless an earlier license has been issued under 37 CFR 5.15(b). The license is subject to revocation upon written notification. The date indicated is the effective date of the license, unless an earlier license of similar scope has been granted under 37 CFR 5.13 or 5.14.

This license is to be retained by the licensee and may be used at any time on or after the effective date thereof unless it is revoked. This license is automatically transferred to any related applications(s) filed under 37 CFR 1.53(d). This license is not retroactive.

The grant of a license does not in any way lessen the responsibility of a licensee for the security of the subject matter as imposed by any Government contract or the provisions of existing laws relating to espionage and the national security or the export of technical data. Licensees should apprise themselves of current regulations especially with respect to certain countries, of other agencies, particularly the Office of Defense Trade Controls, Department of State (with respect to Arms, Munitions and Implements of War (22 CFR 121-128)); the Bureau of Industry and Security, Department of Commerce (15 CFR parts 730-774); the Office of Foreign AssetsControl, Department of Treasury (31 CFR Parts 500+) and the Department of Energy.

NOT GRANTED

No license under 35 U.S.C. 184 has been granted at this time, if the phrase "IF REQUIRED, FOREIGN FILING LICENSE GRANTED" DOES NOT appear on this form. Applicant may still petition for a license under 37 CFR 5.12, if a license is desired before the expiration of 6 months from the filing date of the application. If 6 months has lapsed from the filing date of this application and the licensee has not received any indication of a secrecy order under 35 U.S.C. 181, the licensee may foreign file the application pursuant to 37 CFR 5.15(b).

SPE RESPONSE FOR CERTIFICATE OF CORRECTION

DATE : August 30, 2011

TO SPE OF : ART UNIT 1638

SUBJECT : Request for Certificate of Correction for Appl. No.: 12/472906 Patent No.: 7994395

CofC mailroom date: 8-18-11

Please respond to this request for a certificate of correction within 7 days.

FOR IFW FILES:

Please review the requested changes/corrections as shown in the **COCIN** document(s) in the IFW application image. No new matter should be introduced, nor should the scope or meaning of the claims be changed.

Please complete the response (see below) and forward the completed response to scanning using document code **COCX**.

FOR PAPER FILES:

Please review the requested changes/corrections as shown in the attached certificate of correction. Please complete this form (see below) and forward it with the file to:

Certificates of Correction Branch (CofC)
Randolph Square – 9D10-A
Palm Location 7580

Note: _____

Magdalene Talley
Certificates of Correction Branch
571-272-0423 _____

Thank You For Your Assistance

The request for issuing the above-identified correction(s) is hereby:
Note your decision on the appropriate box.

- ☒ **Approved** — **All** changes apply.
- ☐ **Approved in Part** — Specify below which changes **do not** apply.
- ☐ **Denied** — State the reasons for denial below.

Comments: The request is APPROVED and all changes apply.

Anne Marie Grunberg
SPE

1638
Art Unit

UNITED STATES PATENT AND TRADEMARK OFFICE

Commissioner for Patents
United States Patent and Trademark Office
P.O. Box 1450
Alexandria, VA 22313-1450

FAY KAPLUN & MARCIN, LLP
150 BROADWAY, SUITE 702
NEW YORK, NY 10038

MAILED

SEP 22 2011

OFFICE OF PETITIONS

Applicant: Allgaier, et al.
Appl. No.: 12/472,938
Filing Date: May 27, 2009
Title: ENERGY CONTROLLED DATA TRANSMISSION OF A FIELD DEVICE
Attorney Docket No.: 40124/15203
Pub. No.: US 2010/0262843 A1
Pub. Date: October 14, 2010

This is a decision on the request for a corrected patent application publication under 37 CFR 1.221(b), received on December 7, 2010, for the above-identified application.

The request is granted.

The corrected patent application publication will be published in due course, unless the patent issues before the application is republished.

Inquiries relating to this matter may be directed to Mark Polutta at (571) 272-7709.

Mark Polutta
Senior Legal Advisor
Office of Patent Legal Administration
Office of the Deputy Commissioner
for Patent Examination Policy

UNITED STATES PATENT AND TRADEMARK OFFICE

Commissioner for Patents
United States Patent and Trademark Office
P.O. Box 1450
Alexandria, VA 22313-1450
www.uspto.gov
DIW Sep-10

HENKEL CORPORATION
One Henkel Way
ROCKY HILL CT 06067

MAILED
OCT 06 2010
OFFICE OF PETITIONS

In re Application of	:
Monnet et al.	: DECISION NOTING JOINDER
Application Number: 12/473093	: OF INVENTOR AND
Filing Date: 05/27/2009	: PETITION UNDER
Attorney Docket Number: H 7281	: 37 CFR 1.47(a) MOOT
PCT/US	:

Papers filed on June 28, 2010, in response to the decision dismissing petition mailed on January 28, 2010, included a Declaration signed by the previously non-signing inventors, Delphine LeClerc and Gregory Magnet, in compliance with 37 CFR 1.63.

The petition is **dismissed as moot**.

In view of the joinder of the inventor, further consideration under 37 CFR 1.47(a) is moot; this application does not have any rule 1.47(a) status and no such status should appear on the file wrapper. This application need not be returned to this office for any further consideration under 37 CFR 1.47(a).

This application will be referred to the Office of Patent Application Processing for further processing.

Telephone inquiries related to this decision should be directed to the undersigned at (571) 272-3231.

Douglas I. Wood
Senior Petitions Attorney
Office of Petitions

PTO/SB/20PCT-EP (05-10)
Approved for use through 01/31/2012. OMB 0651-0058
U.S. Patent and Trademark Office; U. S. DEPARTMENT OF COMMERCE
Under the Paperwork Reduction Act of 1995, no persons are required to respond to a collection of information unless it displays a valid OMB control number.

REQUEST FOR PARTICIPATION IN THE PATENT COOPERATION TREATY - PATENT PROSECUTION HIGHWAY (PCT-PPH) PILOT PROGRAM BETWEEN THE EUROPEAN PATENT OFFICE (EPO) AND THE USPTO

Application No:	12/473,105	Filing date:	May 27, 2009
First Named Inventor:	Roger Dale Danzy		
Title of the Invention:	System and Method for Monitoring and Controlling Pressure Relief Valve Performance		

THIS REQUEST FOR PARTICIPATION IN THE PCT-PPH PILOT PROGRAM ALONG WITH THE REQUIRED DOCUMENTS MUST BE SUBMITTED VIA EFS-WEB. INFORMATION REGARDING EFS-WEB IS AVAILABLE AT HTTP://WWW.USPTO.GOV/EBC/EFS_HELP.HTML

APPLICANT HEREBY REQUESTS PARTICIPATION IN THE PCT-PPH PROGRAM AND PETITIONS TO MAKE THE ABOVE-IDENTIFIED APPLICATION SPECIAL UNDER THE PCT-PPH PROGRAM.

The above-identified application is (1) a national stage entry of the corresponding PCT application, or (2) a national stage entry of another PCT application which claims priority to the corresponding PCT application, or (3) a national application that claims domestic/ foreign priority to the corresponding PCT application, or (4) a national application which forms the basis for the priority claim in the corresponding PCT application, or (5) a continuing application of a U.S. application that satisfies one of (1) to (4) above, or (6) a U.S. application that claims domestic benefit to a U.S. provisional application which forms the basis for the priority claim in the corresponding PCT application.

The corresponding PCT application number(s) is/are: PCT/US2010/034953

The international filing date of the corresponding PCT application(s) is/are: May 14, 2010

I. List of Required Documents:

a. **A copy of the latest international work product (WO/ISA, WO/IPEA, or IPER) in the above–identified corresponding PCT application(s)**

☐ Is attached

☒ Is not attached because the document is already in the U.S. application.

b. **A copy of all claims which were indicated as having novelty, inventive step and industrial applicability in the above-identified corresponding PCT application(s).**

☒ Is attached.

☐ Is not attached because the document is already in the U.S. application.

c. **English translations of the documents in a. and b. above are attached (if the documents are not in the English language). A statement that the English translation is accurate is attached for the document in b. above.**

This collection of information is required by 35 U.S.C. 119, 37 CFR 1.55, and 37 CFR 1.102(d). The information is required to obtain or retain a benefit by the public, which is to file (and by the USPTO to process) an application. Confidentiality is governed by 35 U.S.C. 122 and 37 CFR 1.11 and 1.14. This collection is estimated to take 2 hours to complete, including gathering, preparing, and submitting the completed application form to the USPTO. Time will vary depending upon the individual case. Any comments on the amount of time you require to complete this form and/or suggestions for reducing this burden should be sent to the Chief Information Officer, U.S. Patent and Trademark Office, U.S. Department of Commerce, P.O. Box 1450, Alexandria, VA 22313-1450. DO NOT SEND FEES OR COMPLETED FORMS TO THIS ADDRESS.

Approved for use through 01/31/2012. OMB 0651-0058
U.S.Patent and Trademark Office; U.S. DEPARTMENT OF COMMERCE

Under the Paperwork Reduction Act of 1995, no persons are required to respond to a collection of information unless it displays a valid OMB control number.

REQUEST FOR PARTICIPATION IN THE PCT-PPH PILOT PROGRAM BETWEEN THE EPO AND THE USPTO

(continued)

Application No.:	12/473,105
First Named Inventor:	Roger Dale Danzy

d. **(1) An information disclosure statement listing the documents cited in the international work products (ISR, WO/ISA, WO/IPEA, IPER) of the corresponding PCT application.**

☐ Is attached

☒ Has already been filed in the above-identified U.S. application on November 3, 2010

(2) Copies of all documents (except) for U.S. patents or U.S. patent application publications)

☐ Are attached.

☒ Have already been filed in the above-identified U.S. application on November 3, 2010

II. Claims Correspondence Table:

Claims in US Application	Patentable Claims in the corresponding PCT Application	Explanation regarding the correspondence
1-38	34-71	US claims 1-38 are the same as claims 34-71, respectively,
		in the corresponding PCT application.

III. All the claims in the US application sufficiently correspond to the patentable claims in the corresponding PCT application.

Signature /Matthew K. Wernli/	Date March 29, 2011
Name (Print/Typed) Matthew K. Wernli	Registration Number 63,173

Privacy Act Statement

The **Privacy Act of 1974 (P.L. 93-579)** requires that you be given certain information in connection with your submission of the attached form related to a patent application or patent. Accordingly, pursuant to the requirements of the Act, please be advised that: (1) the general authority for the collection of this information is 35 U.S.C. 2(b)(2); (2) furnishing of the information solicited is voluntary; and (3) the principal purpose for which the information is used by the U.S. Patent and Trademark Office is to process and/or examine your submission related to a patent application or patent. If you do not furnish the requested information, the U.S. Patent and Trademark Office may not be able to process and/or examine your submission, which may result in termination of proceedings or abandonment of the application or expiration of the patent.

The information provided by you in this form will be subject to the following routine uses:

1. The information on this form will be treated confidentially to the extent allowed under the Freedom of Information Act (5 U.S.C. 552) and the Privacy Act (5 U.S.C 552a). Records from this system of records may be disclosed to the Department of Justice to determine whether disclosure of these records is required by the Freedom of Information Act.
2. A record from this system of records may be disclosed, as a routine use, in the course of presenting evidence to a court, magistrate, or administrative tribunal, including disclosures to opposing counsel in the course of settlement negotiations.
3. A record in this system of records may be disclosed, as a routine use, to a Member of Congress submitting a request involving an individual, to whom the record pertains, when the individual has requested assistance from the Member with respect to the subject matter of the record.
4. A record in this system of records may be disclosed, as a routine use, to a contractor of the Agency having need for the information in order to perform a contract. Recipients of information shall be required to comply with the requirements of the Privacy Act of 1974, as amended, pursuant to 5 U.S.C. 552a(m).
5. A record related to an International Application filed under the Patent Cooperation Treaty in this system of records may be disclosed, as a routine use, to the International Bureau of the World Intellectual Property Organization, pursuant to the Patent Cooperation Treaty.
6. A record in this system of records may be disclosed, as a routine use, to another federal agency for purposes of National Security review (35 U.S.C. 181) and for review pursuant to the Atomic Energy Act (42 U.S.C. 218(c)).
7. A record from this system of records may be disclosed, as a routine use, to the Administrator, General Services, or his/her designee, during an inspection of records conducted by GSA as part of that agency's responsibility to recommend improvements in records management practices and programs, under authority of 44 U.S.C. 2904 and 2906. Such disclosure shall be made in accordance with the GSA regulations governing inspection of records for this purpose, and any other relevant (*i.e.*, GSA or Commerce) directive. Such disclosure shall not be used to make determinations about individuals.
8. A record from this system of records may be disclosed, as a routine use, to the public after either publication of the application pursuant to 35 U.S.C. 122(b) or issuance of a patent pursuant to 35 U.S.C. 151. Further, a record may be disclosed, subject to the limitations of 37 CFR 1.14, as a routine use, to the public if the record was filed in an application which became abandoned or in which the proceedings were terminated and which application is referenced by either a published application, an application open to public inspection or an issued patent.
9. A record from this system of records may be disclosed, as a routine use, to a Federal, State, or local law enforcement agency, if the USPTO becomes aware of a violation or potential violation of law or regulation.

(12) INTERNATIONAL APPLICATION PUBLISHED UNDER THE PATENT COOPERATION TREATY (PCT)

(19) World Intellectual Property Organization
International Bureau

(43) International Publication Date
2 December 2010 (02.12.2010)

PCT

(10) International Publication Number
WO 2010/138321 A1

(51) International Patent Classification:
F16K 17/04 (2006.01) *F16K 37/00* (2006.01)

(21) International Application Number:
PCT/US2010/034953

(22) International Filing Date:
14 May 2010 (14.05.2010)

(25) Filing Language: English

(26) Publication Language: English

(30) Priority Data:
12/473,105 27 May 2009 (27.05.2009) US

(71) Applicant *(for all designated States except US)*: **DRESSER, INC.** [US/US]; 11th Floor, Millennium I, 15455 Dallas Parkway, Addison, Texas 75001 (US).

(72) Inventor; and
(75) Inventor/Applicant *(for US only)*: **DANZY, Roger, Dale** [US/US]; 320 Pearce Road, Pineville, Louisiana 71360 (US).

(74) Agents: **RIPPAMONTI, Russell, N.** et al.; Fish & Richardson P.C., P.O. Box 1022, Minneapolis, Minnesota 55440-1022 (US).

(81) Designated States *(unless otherwise indicated, for every kind of national protection available)*: AE, AG, AL, AM, AO, AT, AU, AZ, BA, BB, BG, BH, BR, BW, BY, BZ, CA, CH, CL, CN, CO, CR, CU, CZ, DE, DK, DM, DO, DZ, EC, EE, EG, ES, FI, GB, GD, GE, GH, GM, GT, HN, HR, HU, ID, IL, IN, IS, JP, KE, KG, KM, KN, KP, KR, KZ, LA, LC, LK, LR, LS, LT, LU, LY, MA, MD, ME, MG, MK, MN, MW, MX, MY, MZ, NA, NG, NI, NO, NZ, OM, PE, PG, PH, PL, PT, RO, RS, RU, SC, SD, SE, SG, SK, SL, SM, ST, SV, SY, TH, TJ, TM, TN, TR, TT, TZ, UA, UG, US, UZ, VC, VN, ZA, ZM, ZW.

(84) Designated States *(unless otherwise indicated, for every kind of regional protection available)*: ARIPO (BW, GH, GM, KE, LR, LS, MW, MZ, NA, SD, SL, SZ, TZ, UG, ZM, ZW), Eurasian (AM, AZ, BY, KG, KZ, MD, RU, TJ, TM), European (AL, AT, BE, BG, CH, CY, CZ, DE, DK, EE, ES, FI, FR, GB, GR, HR, HU, IE, IS, IT, LT, LU, LV, MC, MK, MT, NL, NO, PL, PT, RO, SE, SI, SK, SM, TR), OAPI (BF, BJ, CF, CG, CI, CM, GA, GN, GQ, GW, ML, MR, NE, SN, TD, TG).

Declarations under Rule 4.17:

— *as to applicant's entitlement to apply for and be granted a patent (Rule 4.17(ii))*

— *as to the applicant's entitlement to claim the priority of the earlier application (Rule 4.17(iii))*

Published:

— *with international search report (Art. 21(3))*

(54) Title: SYSTEM AND METHOD FOR MONITORING AND CONTROLLING PRESSURE RELIEF VALVE PERFORMANCE

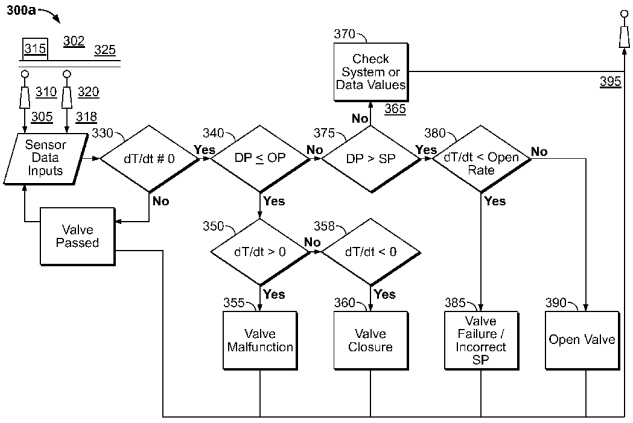

FIG. 3A

(57) Abstract: A pressure relief valve 315 is monitored containing an internal flow passage with valve seat 220 and plug 210 disposed therein. Temperature of a fluid is sensed 310 in the internal flow passage 240 downstream of the valve seat. A temperature signal 305 representative of the sensed temperature is generated and monitored to detect a rate of change 330 in temperature of fluid downstream of the valve seat. Internal pressure of an inlet pressure line 325 is sensed 320, connected to the internal flow passage upstream of the valve seat. A pressure signal 318 representative of the sensed internal pressure is generated and compared 340, 375 against at least one expected line pressure value to determine line pressure status. Operational status of the pressure relief valve is determined 355, 360, 370, 385, 390 based at least in part on the detected rate of temperature change and determined line pressure status.

WO 2010/138321 A1

SYSTEM AND METHOD FOR MONITORING AND CONTROLLING PRESSURE RELIEF VALVE PERFORMANCE

REFERENCE TO RELATED APPLICATIONS

The present application claims the benefit of priority to U.S. Patent Application No. 12/473,105 filed May 27, 2009, the entire contents of which are incorporated herein.

TECHNICAL FIELD

This document relates to pressure relief devices, and more particularly devices and systems for monitoring and controlling pressure relief valve performance.

BACKGROUND

Pressurized systems, including pressure vessels, piping, and other systems are often equipped with pressure relief devices to protect systems from overpressure conditions. Overpressure conditions can arise from a process error, instrument or equipment failure, fire, or other malfunction, which causes the pressure of the fluid in the system to increase above predefined parameters. As used herein, the term fluid may encompass liquid, vapor, gas, or a mixture of any of these fluid phases. Pressure relief devices may include a variety of different types, sizes, and configurations. For example, pressure relief devices can be self-actuated in that the device detects an overpressure condition and opens to release excess pressure from the system. In some cases, pressure relief devices are set to remain closed at a particular pressure setting. When the internal pressure of the line exceeds the predefined pressure setting, the pressure device can be forced open by the internal pressure, allowing excess pressure to escape the relief device. When the internal pressure of the lines and/or vessels of the system normalizes or otherwise returns to an acceptable level, the pressure relief device can return to its closed, sealed state, until the next overpressure state is reached and/or detected. A number of pressure relief devices are known in the art. Pressure relief devices, or pressure safety valves, can include, but are not limited to pilot-operated relief valves, spring-, electromagnetic-, and pneumatic-driven valves.

Pressure relief devices can be monitored to indicate the occurrence of overpressure conditions within a system. Additionally, monitoring systems have been employed to monitor the performance of pressure relief devices themselves. Typical monitoring systems employ position sensors, such as position transducers, to detect

movement within the pressure relief device, indicating that the seat of the device has been displaced and the valve opened. Other monitoring devices in the art employ ultrasonic devices for detecting sounds and vibrations associated with the release of fluid from the relief device as well as the mechanical opening of the valve.

SUMMARY

Disclosed are methods, systems, and programs for monitoring operation of one or more pressure relief valves, each relief valve containing an internal flow passage with a valve seat and valve plug disposed therein. The temperature of a fluid can be sensed in the internal flow passage downstream of the valve seat. A valve temperature signal can be generated representative of the temperature of the fluid downstream of the valve seat. The valve temperature signal can be monitored to detect a rate of change in the temperature of the fluid downstream of the valve seat. The internal pressure of an inlet pressure line can be sensed, connected to the internal flow passage upstream of the valve seat. A line pressure signal can be generated representative of the internal pressure of the inlet pressure line. The line pressure signal can be compared against at least one expected line pressure value to determine a line pressure status. Operational status of the pressure relief valve can be determined based at least in part on the detected rate of change of the fluid temperature downstream of the valve seat and at least in part on the determined line pressure status.

Monitoring operation of one or more pressure relief valves can further include comparing the line pressure signal against at least one expected line pressure value in response to detection of a non-zero rate of change in the fluid temperature of the pressure relief valve body downstream of the valve seat. The line pressure signal can be compared to a value representing an expected operating pressure of the inlet pressure line. The line pressure signal can be compared to a value representing an expected set pressure of the pressure relief valve. The detected rate of change in the temperature of the fluid can be compared to a value representing an expected rate of change in temperature of fluid in the pressure relief valve when the pressure relief valve is in opened state. At least one of the values can represent an expected operating pressure or the value representing an expected rate of change in temperature of fluid in an opened pressure relief valve comprise a plurality of values, wherein in each value in the plurality of values corresponds to an operating state of the inlet pressure line. The valve temperature signal can be transmitted to a remote computer,

wherein the valve temperature is monitored at the remote computer. The line pressure signal can be transmitted to a remote computer, wherein the internal pressure of the inlet pressure line is monitored at the remote computer.

In some aspects, the ambient temperature can be sensed outside of and in proximity to the pressurized inlet line. An ambient temperature signal can be generated representative of the sensed ambient temperature. The internal temperature signal can be compared to the ambient temperature signal to determine at least one temperature relationship. The detected rate of change in the temperature of the fluid in the pressure relief valve downstream of the valve seat can be compared against at least one expected rate of change value for the temperature of fluid in the pressure relief valve downstream of the valve seat. The line pressure signal can be monitored to detect a rate of change in the internal pressure of the inlet pressure line. The line pressure signal can be compared against expected line pressure values in response to detection of a non-zero rate of change one of the temperature of the fluid downstream of the valve seat or internal pressure of the inlet pressure line. A temperature flag can be set if a rate of change in the temperature of the fluid downstream of the valve seat is detected. A pressure flag can be set if a rate of change in the internal pressure of the inlet pressure line is detected. Determining operational status of the pressure relief valve can be based on whether a temperature flag or a pressure flag is set.

In another general aspect, a system for determining operational status of pressure relief valves can include a pressurized inlet line connected to an upstream end of an internal flow passage of a pressure relief valve, and a computing device. The inlet line can include a pressure sensor and a temperature sensor. The pressure sensor can be adapted to measure the internal pressure of a fluid in the pressurized line and convert the measured pressure into a representative inlet line pressure signal. The temperature sensor can be adapted to measure the temperature of a fluid in the internal flow passage downstream of a valve seat of a valve plug disposed in the internal passage and convert the measured temperature of the fluid into a representative downstream fluid temperature signal. The computing device can be adapted to determine line pressure status based on a comparison of the line pressure signal and at least one expected pressure value, a rate of change in downstream fluid temperature based at least on the downstream fluid temperature signal, and operational status of the at least one pressure relief valve based at least on the line pressure status and rate of change in downstream fluid temperature.

A system for determining operational status of pressure relief valves can further a database adapted to store values of the line pressure signal and the downstream fluid temperature signal, wherein the computing device is adapted to access values stored in the database to determine operational status of the at least one pressure relief valve. The database can be adapted to store one of a temperature flag, in response to a detected non-zero rate of change in downstream fluid temperature, or pressure flag, in response to a detected non-zero rate of change in line pressure. The computing device can be further adapted to determine operational status of the at least one pressure relief valve based on whether the temperature flag or pressure flag is set.

In some aspects, the computing device can be remote from the at least one pressure relief valve, each pressure relief valve including a communication device adapted to communicate the internal temperature signal to the remote computing device. The computing device can be remote from the pressurized inlet line, the inlet line including a communication device adapted to communicate the line pressure signal to the remote computing device. The computing device can be adapted to determine an open state of the pressure relief valve based on a comparison of the rate of change in downstream fluid temperature and at least one expected temperature change value. The computing device can include a database storing at least one of the at least one expected pressure value or the at least one expected temperature change value. The at least one expected temperature change value can include at least an expected open valve rate of change. The at least one expected pressure value can include an operational pressure of the pressurized inlet line. The inlet line further can include a second temperature sensor adapted to measure the ambient temperature outside of and in proximity to the pressurized inlet line. The pressure relief valve can be a pneumatic, electromagnetic, pilot, or spring-operated relief valve. The computing device can be adapted to determine a rate of change in line pressure based at least on the line pressure signal and determine operational status of the at least one pressure relief valve based at least on the rate of change in line pressure.

In another aspect, the inlet line of a system for determining operational status of pressure relief valves can include a temperature sensor adapted to measure the temperature of a portion of the internal flow passage downstream of a valve seat of a valve plug disposed in the internal passage and convert the measured temperature of the portion of the internal flow passage into a representative valve temperature signal. The computing device can be adapted to determine a rate of change in temperature of

the portion of the internal flow passage based at least on the valve temperature signal. Determining operational status of the at least one pressure relief valve can be based on the rate of change in temperature of the portion of the internal flow passage. The temperature sensor can be disposed on an interior surface of the internal flow passage or within an internal volume of the internal flow passage. The inlet line can also include a second temperature sensor adapted to measure the ambient temperature outside of and in proximity to the pressurized inlet line.

In another general aspect, monitoring operation of one or more pressure relief valves can include sensing the temperature of a portion of the internal flow passage downstream of the valve seat. A valve temperature signal can be generated representative of the temperature of the portion of the internal flow passage downstream of the valve seat. The valve temperature signal can be monitored to detect a rate of change in the temperature of the portion of the internal flow passage downstream of the valve seat. The internal pressure of an inlet pressure line can be sensed, connected to the internal flow passage upstream of the valve seat. A line pressure signal can be generated representative of the internal pressure of the inlet pressure line. The line pressure signal can be compared against at least one expected line pressure value to determine a line pressure status. Operational status of the pressure relief valve can be determined based at least in part on the detected rate of change of the temperature of the portion of the internal flow passage downstream of the valve seat and at least in part on the determined line pressure status.

In some aspects, the temperature can be sensed near a surface of the internal flow passage downstream of the valve seat. Sensing the temperature of a portion of the internal flow passage can include sensing the temperature of an internal fluid volume near the portion of the internal flow passage downstream of the valve seat.

Alternative aspects of the invention are disclosed herein below.

In a first aspect, a computer-implemented method for monitoring operation of at least one pressure relief valve, each pressure relief valve containing an internal flow passage with a valve seat and valve plug disposed therein, the method comprises:

sensing the temperature of a portion of the internal flow passage or a fluid in the internal flow passage downstream of the valve seat; and

generating a valve temperature signal representative of the temperature of the portion of the internal flow passage or the fluid in the internal flow passage downstream of the valve seat; and

monitoring the valve temperature signal to detect a rate of change in the temperature of the portion of the internal flow passage or the fluid in the internal flow passage downstream of the valve seat;

In a second aspect according to the first aspect, the method further comprises: sensing the internal pressure of an inlet pressure line connected to the internal flow passage upstream of the valve seat;

generating a line pressure signal representative of the internal pressure of the inlet pressure line; and

comparing the line pressure signal against at least one expected line pressure value to determine a line pressure status; and

In a third aspect according to any one of the preceding aspects, the method further comprises:

determining operational status of the pressure relief valve based at least in part on the detected rate of change in the temperature of the portion of the internal flow passage or the fluid in the internal flow passage and at least in part on the determined line pressure status.

In a fourth aspect according to any one of the preceding aspects, the line pressure signal is compared against at least one expected line pressure value in response to detection of a non-zero rate of change in the fluid temperature of the pressure relief valve body downstream of the valve seat.

In a fifth aspect according to any one of the preceding aspects, the method further comprises:

comparing the line pressure signal to a value representing an expected operating pressure of the inlet pressure line.

In a sixth aspect according to any one of the preceding aspects, the method further comprises:

comparing the line pressure signal to a value representing an expected set pressure of the pressure relief valve.

In a seventh aspect according to any one of the preceding aspects, the method further comprises:

comparing the detected rate of change in the temperature of the fluid to a value representing an expected rate of change in temperature of fluid in the pressure relief valve when the pressure relief valve is in opened state.

In a eight aspect according to any one of the preceding aspects, at least one of the values representing an expected operating pressure or the value representing an expected rate of change in temperature of fluid in an opened pressure relief valve comprise a plurality of values, wherein in each value in the plurality of values corresponds to an operating state of the inlet pressure line.

In a ninth aspect according to any one of the preceding aspects, the method further comprises:

transmitting the valve temperature signal to a remote computer, wherein the valve temperature is monitored at the remote computer.

In a tenth aspect according to any one of the preceding aspects, the method further comprises:

transmitting the line pressure signal to a remote computer, wherein the internal pressure of the inlet pressure line is monitored at the remote computer.

In a eleventh aspect according to any one of the preceding aspects, the method further comprises:

sensing the ambient temperature outside of and in proximity to the pressurized inlet line.

In a twelfth aspect according to the eleventh aspect, the method further comprises:

generating an ambient temperature signal representative of the sensed ambient temperature.

In a thirteenth aspect according to the twelfth aspect, the method further comprises:

comparing the internal temperature signal to the ambient temperature signal to determine at least one temperature relationship.

In a fourteenth aspect according to any one of the preceding aspects, the method further comprises:

comparing the detected rate of change in the temperature of the fluid in the pressure relief valve downstream of the valve seat against at least one expected rate of change value for the temperature of fluid in the pressure relief valve downstream of the valve seat.

In a fifteenth aspect according to any one of the preceding aspects, the method further comprises:

monitoring the line pressure signal to detect a rate of change in the internal pressure

of the inlet pressure line.

In a sixteenth aspect according to any one of the preceding aspects, the line pressure signal is compared against expected line pressure values in response to detection of a non-zero rate of change one of the temperature of the fluid downstream of the valve seat or internal pressure of the inlet pressure line.

In a seventeenth aspect according to any one of the preceding aspects, the method further comprises:

setting at least one of a temperature flag, if a rate of change in the temperature of the fluid downstream of the valve seat is detected, or a pressure flag, if a rate of change in the internal pressure of the inlet pressure line is detected.

In a eighteenth aspect according to the seventeenth aspect, determining operational status of the pressure relief valve is further based on whether the temperature flag or pressure flag is set.

In a nineteenth aspect according to any one of the preceding aspects, the temperature is sensed near a surface of the internal flow passage downstream of the valve seat.

In a twentieth aspect according to any one of the preceding aspects, sensing the temperature of a portion of the internal flow passage comprises sensing the temperature of an internal fluid volume near the portion of the internal flow passage downstream of the valve seat.

In a twenty-first according to, a system for determining operational status of at least one pressure relief valve is provided, each pressure relief valve containing an internal flow passage with a valve seat and valve plug disposed therein, the system comprising:

a inlet pressure line connected to an upstream end of the internal flow passage of a pressure relief valve, the inlet pressure line comprising a pressure sensor adapted to measure the internal pressure of a fluid in the inlet pressure line and to generate an inlet line pressure signal representative of the internal pressure of the inlet pressure line.

In a twenty-second aspect according to the twenty-first aspect, the system further comprises:

a temperature sensor adapted to measure the temperature of a portion of the internal flow passage or a fluid in the internal flow passage downstream of the valve seat and to generate a valve temperature signal representative of the temperature of

the portion of the internal flow passage or the fluid in the internal flow passage downstream of the valve seat.

In a twenty-third aspect, the system further comprises:

a computing device adapted to determine:

1) line pressure status based on a comparison of the line pressure signal and at least one expected pressure value;

2) a rate of change in the temperature of the portion of the internal flow passage or the fluid in the internal flow passage based at least on the valve temperature signal.

3) operational status of the at least one pressure relief valve based at least in part on the line pressure status and at least in part on the rate of change in the temperature of the portion of the internal flow passage or the fluid in the internal flow passage.

In a twenty-fourth aspect according to one of the twenty-first to twenty-third aspects, the computing device is remote from the at least one pressure relief valve and each pressure relief valve further comprises a communication device adapted to communicate the internal temperature signal to the remote computing device.

In a twenty-fifth aspect according to one of the twenty-first to twenty-fourth aspects, the computing device is remote from the pressurized inlet line, the pressurized inlet line further comprising a communication device adapted to communicate the line pressure signal to the remote computing device.

In a twenty-sixth aspect according to one of the twenty-first to twenty-fifth aspects, the computing device is further adapted to determine an open state of the pressure relief valve based on a comparison of the rate of change in downstream fluid temperature and at least one expected temperature change value.

In a twenty-seventh aspect according to one of the twenty-first to twenty-sixth aspects, the computing device comprises a database adapted to store at least one of the at least one expected pressure value or the at least one expected temperature change value.

In a twenty-eighth aspect according to one of the twenty-sixth or twenty-seventh aspects, wherein the at least one expected temperature change value comprises at least an expected open valve rate of change

In a twenty-ninth aspect according to one of the twenty-first to twenty-eighth aspects, the at least one expected pressure value comprises an operational pressure of the pressurized inlet line.

In a thirtieth aspect according to one of the twenty-first to twenty-ninth aspects, the inlet line further comprises a second temperature sensor adapted to measure the ambient temperature outside of and in proximity to the pressurized inlet line.

In a thirty-first aspect according to one of the twenty-first to thirtieth aspects, the pressure relief valve is one of a pneumatic, electromagnetic, pilot, or spring-operated relief valve.

In a thirty-second aspect according to one of the twenty-first to thirty-first aspects, the computing device is further adapted to:

determine a rate of change in line pressure based at least on the line pressure signal.

In a thirty-third aspect according to one of the twenty-first to thirty-second aspects, the computing device is further adapted to:

determine operational status of the at least one pressure relief valve based at least on the rate of change in line pressure.

In a thirty-fourth aspect according to one of the twenty-first to thirty-third aspects, the system further comprises a database adapted to store values of the line pressure signal and the downstream fluid temperature signal, wherein the computing device is adapted to access values stored in the database to determine operational status of the at least one pressure relief valve.

In a thirty-fifth aspect according to one of the twenty-first to thirty-fourth aspects, the database is further adapted to store one of a temperature flag, in response to a detected non-zero rate of change in downstream fluid temperature, or pressure flag, in response to a detected non-zero rate of change in line pressure.

In a thirty-sixth aspect according to the thirty-fifth aspect, the computing device is further adapted to determine operational status of the at least one pressure relief valve based on whether the temperature flag or pressure flag is set.

In a thirty-seventh aspect according to one of the twenty-first to thirty-sixth aspects, the temperature sensor is disposed on an interior surface of the internal flow passage or in an internal volume of the internal flow passage.

In a thirty-eighth aspect according to one of the twenty-first to thirty-seventh aspects, the inlet line further comprises a second temperature sensor adapted to measure the ambient temperature outside of and in proximity to the pressurized inlet line.

In a thirty-ninth aspect according to one of the twenty-first to thirty-eighth aspects, the system further comprises a memory mean in which a computer program is stored, wherein the computer program is adapted to carry out the steps of determination and/or calibration.

In a forty-first aspect, a computer-program product is provided which stores instructions which when executed by at least one processor cause the at least one processor to perform a method according to any one of the first to twentieth aspects.

In a forty-second aspect according to the thirty-ninth aspect, the computer-program product is a data carrier, preferably an optical or magnetic or an electromagnetic data carrier.

In a forty-third aspect according to the fortieth aspect, the data carrier is one selected from the group comprising a ROM, an EPROM, a flash memory, a magnetic disk, an optical disk , an electromagnetic wave.

In a forty-fourth aspect, a system is provided according to one of the first to twentieth aspect, the system comprising a memory means in which a computer-program is stored, wherein the computer program is adapted to carry out said determination.

The details of one or more embodiments of the invention are set forth in the accompanying drawings and the description below. Other features, objects, and advantages of the invention will be apparent from the description and drawings, and from the claims.

DESCRIPTION OF DRAWINGS

FIG. 1 is schematic diagram of a system for monitoring performance of pressure relief devices in a pressurized system.

FIG. 2A illustrates a schematic diagram of an example pressure relief device in a closed state.

FIG. 2B illustrates a schematic diagram of an example pressure relief device in an open state.

FIG. 3A is a flowchart of a first example technique for monitoring performance of a pressure relief device.

FIG. 3B is a flowchart of a second example technique for monitoring performance of a pressure relief device.

FIG. 3C is a flowchart of a third example technique for monitoring performance of a pressure relief device.

FIG. 4A is a schematic diagram of a decentralized system for monitoring a pressurized system.

FIG. 4B is an example record of expected temperature and pressure values stored in an example database adapted for use with the system of FIG. 4A.

Like reference symbols in the various drawings indicate like elements.

DETAILED DESCRIPTION OF ILLUSTRATIVE EMBODIMENTS

Pressure relief devices, such as pressure relief valves, are valuable elements within pressurized systems. Not only do pressure relief valves function to regulate overpressure conditions within pressurized systems, but pressure relief devices can be monitored at a more macro level to detect the cause of over-pressure conditions as well as other performance issues within the system. Monitoring of a relief valve may indicate the valve is leaking and needs maintenance or that the valve may be opening at an improper pressure setting for the process system on which it is installed and may therefore need adjustment. A pressure relief device monitoring system can utilize temperature sensors to detect the release of fluid from the pressurized system through the pressure relief device. For example, the rate of change in temperature near the seat of a relief valve can be monitored and detected using the sensor, to identify an open pressure relief condition. These sensors, and signals generated from sensor readings, can be used to alert the system to fluid release at particular pressure relief devices. Pressure relief device temperature signals can be processed together with system internal pressure readings and other data to derive why fluid was released from the system as well as to detect equipment failure or malfunction of the pressure relief devices and other system components. The use of temperature and pressure sensing devices can allow pressure relief devices to be monitored without exclusive reliance on the use of prior art position detection or ultrasonic sensing devices typically used in prior pressure relief valve monitoring systems.

Referring to FIG. 1, an example pressure relief device monitoring system 100 can include a pressurized system 105 having at least one pressure relief device 110. A pressurized system 105, in some instances, can have a plurality of pressure relief devices (e.g., 135, 140), for example where a system 105 maintains varied operating pressures across the system 105 or where the size of the system 105 lends itself to the inclusion of multiple pressure relief devices 110, 135, 140. A pressure relief device 110 can include, but are not limited to, pressure relief valves and pressure safety valves, as well as other devices capable of releasing fluid from a system in order to

reduce pressure conditions within the system 100. Pressure relief devices 110, such as pressure relief valves, can include pilot-operated relief valves, spring-, electromagnetic-, and pneumatic-driven valves, as well as valves employing alternative functionality. Each relief device can include a temperature sensor 115, 145, 150, capable of measuring the temperature of a portion of the relief device 110 or a fluid in an internal volume of the relief device.

FIG. 2A illustrates an example pressure relief valve 110 in its closed state. This instance of the pressure relief valve 110 connects to the system 105 at a flow passage 238. The relief valve 110 can be self-actuating and include a spring 205, or other resistive device, applying a force on a plug 210, through a stem 215, plugging a main seat 220 in the valve's closed state. The seat 220 may include a seal area 222 of elastomeric or hardened material as required by the valve application. The plug 210 and seat 220 function, disengaging and unsealing (as shown in FIG. 2B) to allow the release of fluid from the pressurized system 105 and reengaging to seal the valve 110 (as illustrated in FIG. 2A). Additional seals 225, 230 can also be provided within the body 235 of the relief valve 110 to seal components of the valve 110, such as the spring 205, from contact with fluids that may be released from the system 105 in the valve's open state, as illustrated in FIG. 2B. When the pressure within the system 105 exceeds the valve's predetermined set pressure, the pressure of the system 105 applies a force on plug 210 exceeding the downward force applied on the plug 210 by spring 205. As a result, the plug 210 is lifted from the seat 220 allowing fluid from the system 105 to escape through a downstream, internal flow passage 240, or outlet, of the valve 110. In the relief valve's 110 open state, fluid can be released until the pressure of the system 105, acting on the plug 210, decreases and is overcome by the force of the spring 205, resulting in the plug 210 re-displacing to the closed position, closing the valve 110, as shown in FIG. 2A. FIGS. 2A and 2B are examples of one type of relief device. Other types of relief devices and valves are fully compatible with the teachings of this invention and are considered part of this disclosure.

In the examples of FIGS. 2A and 2B, a temperature sensor 115 is included to measure temperature at the valve 110. Temperature sensors can include thermocouples, thermisters, infrared, and other temperature sensing devices. In the implementation illustrated in FIG. 2A, the temperature sensor 115 is positioned to measure the temperature of fluid within a volume in outlet 240, immediately downstream from the seat 220. In other implementations, the temperature sensor 115

can be positioned to measure temperature of a portion of the valve structure itself, for example an inner wall of outlet 240. Additionally, in some implementations temperature sensors 115 can be provided to measure a temperature of a fluid volume immediately upstream from the seat 220, in flow passage 238. Further, a plurality of sensors can be used in combination, for example to measure a temperature difference upstream and downstream of the plug 210, to detect a change in temperature in the relief device 110 corresponding with the release of fluid through the device 110. Indeed, in some implementations, an additional temperature sensor can be provided to measure ambient temperature in a volume surrounding a portion of the relief device 110, for example near the relief valve outlet 240.

Returning to FIG. 1, data collected by the temperature sensor 115 can be collected and communicated to a processor 120. The processor 120 can use this data to derive rates of change in temperature, alert notifications, and other diagnostic results. Additionally, deriving diagnostic results, such as calculating a rate of change in temperature, may include sampling sensed temperature and pressure values from the sensor 115 at predisposed time intervals, requiring near constant operation of the sensor 115 and computer processing devices 120 tasked with gathering the sampled data and calculating rate of change based on the predisposed interval. In some implementations, a processor 120 may also include memory 122, for storing received sensor data. For example, in some implementations, in order to calculate a rate of change of a sensed value, it may be necessary to store preceding values in memory 122 for comparison with the more recently captured values to determine the change in value from one interval to the next. Memory 122 can also be used to derive trends, produce reports, or calculate other diagnostic values in connection with historical system performance using larger data samples captured over longer term.

In some implementations, the processor 120, as well as memory 122, may be remote from the temperature sensor 115, for example located at a central, remote computing device. In other implementations, the processor 120 can be distributed. For example, in some limitations, some processing functions can be carried out at a processor located on the temperature sensor 115 while other processing functions can be carried out at a centralized processor. For instance, a temperature sensor 115 may be adapted to process temperature readings to calculate a rate of change in temperature. This computer rate of change can then be communicated to a centralized computing device, for further processing and monitoring, for example, in connection

with other data received from other relief devices and system 105 components. In still other examples, all processing for each sensor or component can be carried out using a processor 120 located at the component.

In implementations employing a remote processor 120 or remote processing functionality, temperature sensors 115 can be further adapted to communicate temperature data, calculations, or alerts to the remote computing device. Temperature sensors may communicate data to remote computing devices using a hardwire or optical line or wireless communication protocol, such as WiFi, Bluetooth, or a wide-area cellular telephone network. Temperature sensors 115 can be adapted to communicate data directly to the remote computing device or over a network, for example a local area network, private network, virtual private network, or a distributed, public or global network, such as the internet.

In other possible implementations, a tiered processing arrangement can be employed including an intermediate processor. The intermediate processor can be located at a facility proximate to or remote from the monitored pressurized system and adapted to gather data from sensors, processes, and other processors. Processed and raw data gathered by an intermediate processor can be further processed by the intermediate processor or forwarded then to other processors or facilities. For instance, data can be forwarded from an intermediate processor to a centralized monitoring and control location. In some instances, a centralizing monitoring and control location can monitor multiple pressurized systems at various remote locations.

As shown in FIG. 1, additional sensors (e.g., 125) can be provided in connection with the pressurized system 105. For example, a pressure sensor 125 can be provided in pressurized system 105 for measuring the internal pressure of a line or vessel of the pressurized system 105 or a subsystem thereof. The pressure sensor can be a fiber optic pressure sensor, microelectromechanical (MEMS), piezoelectric sensor, mechanical deflection device, strain gauge, or other pressure sensing device capable of measuring fluid pressure in the pressurized system 105 and within components of the system 105. In some implementations, a plurality of pressure sensors 125 can be provided in system 105. Further, in some instances, pressure sensors 125 can be provided so as to be positioned near or otherwise correspond to pressure relief devices 110 in the system. In other examples, a plurality of pressure sensors 125 can be provided to obtain and average pressure measurements across the system 105 or to correspond with a plurality of subsystems in the system 105.

Like the temperature sensor 115, additional sensors, including pressure sensor 125, can communicate readings to a processor 120 using wireline, optical line, or wireless communication technologies. Processing can take place at the individual sensors or may be centralized in a local or remote computer processing device 120. A centralized computer processing device 120 can accept communicated temperature, pressure, and other readings and combine these data points during processing to derive diagnostic values and conclusions. For example, a calculated rate of change in temperature based on temperature readings from a relief device can be compared against pressure values for the system to determine whether a relief device is open and releasing fluid from the system. A detected open condition may indicate that the relief device 110 is functioning correctly to relieve an overpressure condition in the system 105 or that the relief device is leaking or otherwise malfunctioning. Likewise, a decrease in pressure or pressure higher than a relief device's set pressure may indicate that a relief device is open, has recently opened, or should be opened.

In addition to a processor 120, some implementations of system 100 can include a database 130, capable of storing data representing expected system performance data as well as other values and constants that can be accessed and used by processor 120 in monitoring and deriving results from received temperature, pressure, and other readings from sensors in system 100. For example, the processor 120 can compare temperature and pressure signals derived from temperature and pressure sensing devices against expected values for the system 105, as stored in database 130. In other instances, processor 120 can store these expected values and constants locally, for example by hard-coding the constants in memory, software, or firmware employed by the processor 120. However, employing database 130 can be advantageous, in that it allows for dynamic storage and management of system 105 data, including arrays of expected values, variables, and constants for access and use by the processor 120. Additionally, database 130 can allow system managers, in some instances, to more easily supplement and modify expected values, variable, and constants used by the processor 120, for example to reflect corresponding modifications made to the underlying physical system 105 to which these expected values and constants apply.

The database 130 can store a set of values representing the expected internal pressure of the system 105, or an expected valve temperature rate of change, during a given operational condition of the system 105. The database 130 can additionally

associate these values, or constants, with particular subsystems, piping, vessels, or relief devices 110 within the system 105, as well as particular operating conditions of the system. In some instances, system 105 can operate under varying conditions depending upon the process, fluids, ambient environment, and other conditions influencing the operation and thermodynamic characteristics of the system 105. Accordingly, database 130 can store and associate a plurality of values with a single system element, each value in the set of values corresponding to a particular operating condition of the system 105. For instance, some pressurized systems can have multiple operating states, for example, with fluids of different types or phases channeled through the pressurized lines of the system at different times or process cycles. A fluid in the system during one operating state can have, for example, an expected temperature rate of change that is different from other that of fluids in the system during other operating states. One example is a system that channels water through the system during one operating state and steam during a second operating state. Accordingly, distinct expected values can be stored in the database 130 for each of the fluids or operating states of the system. Depending on the current operating condition of the system 105, the database 130 can return those particular expected values corresponding to the current operating condition, allowing the system 100 to compare detected pressure and temperature readings against more precise, state-specific expected values, allowing the processor 120 to make more accurate determinations regarding the current status and operation of the system 105.

Systems, such as system 100 illustrated and described in connection with FIG. 1, can be used to perform techniques and algorithms to access and monitor the performance of a pressurized system (e.g., 105) and pressure relief devices (e.g.,110) employed in the pressurized system. FIG. 3A is a flowchart 300a illustrating one example technique for monitoring the performance of a pressurized system and associated pressure relief devices. Temperature data can be received 305 from temperature sensors 310 measuring temperature at pressure relief devices 315 and pressure data can be received 318 from pressure sensors 320 measuring pressure in an inlet line 325 of a pressurized system 302. The temperature at a pressure relief device, for example at a volume downstream from a seat of the relief device 315, can be monitored 330 for detection of a non-zero change in temperature (dT/dt) at the relief device. In an inlet line 325 containing substantially incompressible process fluid, warmer than the fluid (e.g., air) downstream from the pressure relief device 315,

a positive change in temperate can indicate that the pressure relief device is open or leaking, releasing the warm fluid and bringing it in contact with the temperature sensor 310. Where a negative change in temperature is detected in the warm, incompressible fluid system, a determination can be made that a relief device, once open, has recently closed. Contrarily, if the pressurized system 105 includes a warm, compressible process fluid, a negative change in temperature detected downstream of the relief device 315 may indicate that the valve is open and/or leaking due to thermodynamic effects of a temperature drop in conjunction with a pressure drop in the compressible process fluid across the valve seat when the valve is open and the compressible fluid is flowing through the valve.

Alternatively, in cold or cryogenic fluid systems, a negative change in temperature at the pressure relief device 315 can indicate an open or leaking relief device 315, positive temperature changes indicating the closure of the pressure relief device.

Thermodynamic properties of the process fluid may be stored in a database (e.g., 130) such that when a non-zero change in temperature is detected, inlet line pressure data can be analyzed or collected at or near the time of the detected change in temperature to further diagnose the cause of the detected change in temperature. In other implementations, such as that illustrated in FIG. 3B, additional or substitute readings, determinations, or calculations can trigger further processing in lieu of or in addition to a detected change in temperature. For example, an ambient temperature (AT) reading, corresponding to a volume near the relief device 315, may be received 333 and compared 335 with temperature (T) data detected and received 305 from sensors 310 at the relief device 315. For instance, in a pressurized system utilizing a fluid warmer than the ambient temperature (AT) surrounding the relief device 315, if the measured relief device temperature T is greater than the measured ambient temperature AT, this may indicate that the relief device has opened. Other readings may also be used to trigger or begin processing directed at diagnosing the functional status of a pressurized system or relief device, for example using a measurement of temperature upstream and downstream of a plug of a pressure relief device.

In the examples of FIGS 3A and 3B, once a temperature change 330 (or temperature imbalance 335) has been detected, further processing of temperature and pressure data collected from the pressurized system, can be initiated. For example, inlet line pressure data can be compared with an expected value for the pressure in the

inlet line 325. A comparison of line pressure with an expected value can indicate that the pressure in the line 325 is higher or lower than expected, as well as indicate that the pressure in the line 325 is reaching, or has reached, a point where one or more pressure relief devices 315 will open, releasing fluid from the line 325. The line pressure reading can be compared, for example, with an expected value for the corresponding operating pressure (OP) 340 of the inlet line and/or the set pressure (SP) 375 of the pressure relief device 315. In one example, if a line pressure reading, taken at or near the time of the detected temperature change, is lower than the operating pressure 340, a determination can be made relating to the operation of the relief device 315. For instance, in a warm fluid system, if a positive temperature change was detected 350, a determination can be made 355 that the relief device 315 is leaking or otherwise malfunctioning and releasing fluid from the line 325. If the change in temperature was negative 358, in this example, a determination can be made 360 that the pressure release device 315 has recently closed.

In some instances, the line pressure reading and comparison, may indicate that the line pressure reading is higher than the operating pressure but lower than set pressure 365, allowing further determinations can be made 370. For example, a determination can be made 370 that the expected value for operating pressure is incorrect, that the actual operating pressure is too high, or that the expected set pressure value is too low and/or that the actual set pressure of the device does not match the expected set pressure value. If, on the other hand, the detected line pressure is higher than the expected set pressure value 375, further determinations can be made regarding the performance of the relief device. For instance, if the rate of temperature change is less than an expected rate of temperature change when the relief device 315 is open and operating correctly 380 (or less than the relief device's "open rate"), a determination can be made 385 that the relief device set pressure is incorrect (i.e., too low) or that the pressure relief device is malfunctioning or has failed. If however, the rate of change in temperature equals or exceeds the expected rate of change in temperature for an open pressure relief device 380, a determination can be made 390 that the relief device 315 is open and operating correctly.

Further provisions and processing steps can be incorporated to increase the accuracy of diagnoses made concerning relief devices and the pressurized system 302 generally. For instance, FIG. 3C illustrates another flowchart 300c showing an alternative example technique for monitoring the performance of a pressurized system

302 and associated pressure relief devices 315. Similar to the techniques illustrated and described in connection with FIGS. 3A and 3B, temperature sensors 310 measuring temperature at pressure relief devices 315 and pressure sensors 320 measuring pressure in an inlet line 325 of the pressurized system 302 can collect and transmit temperature and pressure readings for processing. In some implementations, ambient temperature readings 333 can also be collected for use in processing. Detected pressure and temperature data can then be transmitted 304 to a database 328 for storage and retrieval 339 during processing. Database 328 can also store constants and expected values used in processing and benchmarking collected temperature and pressure data.

As in the examples of FIGS. 3A and 3B, abnormal sensor readings can trigger further processing and measurements to ascertain the cause of the abnormal reading. Indeed, as shown in FIG. 3C, abnormal line pressure readings, as well as abnormal relief device temperature readings can trigger further system data processing. For instance, as shown in FIG. 3C, the detection of an unexpected, non-zero change in line pressure 329 or relief device temperature 330 can trigger further processing. A non-zero rate of change can be determined, for example, by comparing two or more sequential values detected and retrieved from system sensors 310, 320. Where temperature (or pressure) data is digitally sampled and stored in database at a high rate of collection, it can be desirable to base a "detected" rate of change on more than two sequential values evidencing the change in temperature. For systems or sensors employing lower sampling rates, it may be sufficient to compare only two sequential values to determine a detected change. In some implementations, a non-zero rate of change can allow for some variance between sequential temperature and pressure values, before a "non-zero" result is determined, whereas, in more sensitive systems or systems employing low sampling rates, any variance between sequential values may trigger a non-zero result and further processing.

In the example of FIG. 3C, a non-zero rate of change in relief device temperature 330 can result in a temperature "flag" being set 334. Similarly, a detected non-zero rate of change in line pressure can cause a pressure flag to be set 334. A flag may be a binary flag, session key, or other value stored in the database 328 identifying the reason why additional processing was initiated. As will be described below, the basis for additional processing, as recorded by the set flags, can be used to further refine the diagnoses resulting from the processing. For example, a set temperature

flag can dictate that resulting diagnoses assume that fluid has escaped the pressurized system through a relief device, influencing the temperature read by temperature sensors at the relief device. However, in cases where only the pressure flag is set, this can serve to support an assumption that either fluid has escaped and no temperature change sensed (e.g., due to a malfunctioning temperature sensor), or that some other pressure-related event has taken place. As an example, in the case of a malfunctioning temperature sensor, an open or leaking relief device will result in a detected drop in line pressure that is not detected by the temperature sensor. Other conditions can also arise, the pressure and temperature sensors, and corresponding pressure and temperature flag values, capable of being applied together to more accurately diagnose the cause of a pressure or temperature change.

Continuing with the example of FIG. 3C, a set temperature or pressure flag can trigger a comparison 340 of detected line pressure (LP) against an expected operating pressure value (OP). The line pressure value selected can be that value stored in the database 328 corresponding with or having a detection time nearest the setting of the temperature or pressure flag that initiated the processing. If the detected line pressure (LP) is equal to or less than a stored expected operating pressure (OP) value, a further comparison 344 can be made, comparing a contemporary, detected valve temperature (VT) value with an expected baseline closed valve temperature constant (BVCT). The BVCT value can represent the expected temperature value at a relief device when the device is closed. In instances when only a pressure flag is set during processing, and detected valve temperature (VT) equals or approximates BVCT, it can be determined that the relief device is closed and working properly 359.

In some instances, comparison 344 can be skipped, for example, where only a temperature flag is set. A set temperature flag indicates that a change in temperature has occurred. Thus, in some instances, a comparison 344 of detected temperature with an expected temperature value for a closed valve could often be unnecessary. However, carrying out the comparison 344 during a set temperature flag can nonetheless be useful, first, to corroborate or validate the nature of the non-zero rate of change, or to catch instances where the non-zero rate of change, while measurable, was lower than would be expected for an actual relief device leak or malfunction. Where the detected temperature is equal to or within an acceptable range of BVCT, it can be determined that the relief device is working properly 359, even when a temperature flag is set. If, however, the detected valve temperature does not equal or

approximate BVCT, an alternative conclusion 356 can result. For instance, if the temperature flag is set, it can be determined 356 that the relief device, corresponding to the set temperature flag, is leaking. If, however, only the line pressure flag is set, it can be similarly determined 356, for example, that the actual operating pressure of the system or line is too high and that the relief device continues to function properly.

In other instances, the detected line pressure will be higher than the expected operating pressure. If this is the case, detected line pressure can be further compared 346 against an expected value of the set pressure (SP) of the relief device. If the detected line pressure is greater than the expected operating pressure but lower than set pressure, a comparison 348 can be made between the detected valve pressure and the expected baseline valve leaking temperature (BVLT) for the valve. The baseline valve leaking temperature can be a constant indicating an expected temperature downstream from a leaking relief device outlet. For pressurized systems with fluids hotter than the system's ambient environment, BLVT will be higher than BVCT, because leaking fluid will result in warmer temperature than when the relief device is closed. BVLT, in a warm fluid system, however, will be cooler than an expected baseline open valve temperature (BVOT) constant for a valve, in that an open relief device will be outputting greater volumes of warm fluid into the area measured by the relief device temperature sensor.

If the detected relief device temperature is equal to or within an acceptable range of the BVLT further comparisons 358 can be triggered. For instance, depending on the sampling rate of the sensors 310, 320, an abnormal pressure or temperature condition can be identified that further appears to be the result of a leaking relief device. While this may, in fact be the case, other alternative causes for the abnormal reading may be possible. For example, if a relief device opens quickly and is in the process of closing at the time of a temperature and/or pressure reading, the measured temperature (in a warm fluid temperature) may be higher than normal, and changing at a non-zero rate, the pressure in the line slightly higher than normal, but lower than would be expected for an open condition. In order to determine that the relief device is leaking, and rule out the possibility that these readings resulted during perfectly proper operation of the relief device (e.g., a valve closing), the detected rate of temperature change (or in some instances rate of pressure change) can be compared 358 against a value of an expected rate of change for a normal closing of the relief device. During a set temperature flag condition, if the detected rate of change is equal

to or approximates what would be expected for a properly closing relief device (baseline valve closing rate (BVCR)), a conclusion 362 can be reached that the relief device was in the act of closing when the flag(s) was set. If the rate of change does not equal the expected value, it can be determined that the relief device is leaking 356. However, when the pressure flag is the only flag set, a determination can be made 356, 362 that a high operating pressure is responsible for the abnormal pressure reading.

Finally, if the detected line pressure is greater than set pressure 364, other further comparisons can be made between detected values and stored expected values. For example, detected temperature can be compared 366 against an expected baseline relief device temperature value (BVOT) when the relief device is in open condition. If the temperature flag is set and the detected temperature value is equal to or approximates the expected open temperature value (BVOT), a determination 368 can be made that the relief device has opened, as designed, to release fluid in an overpressure condition. If only the pressure flag is set, and no leaking fluid has been detected by an abnormal temperature change at a relief device outlet, an alternate conclusion 368 can be reached—that the operating pressure of the system is too high. If detected temperature is lower than BVOT, however, an additional comparison 380 can be conducted, comparing the detected rate of change in temperature against an expected rate of change when the relief device is open (BVOR). If the temperature flag is set and the detected rate of change is equal to or approximates the expected rate of temperature change for an open relief device (BVOR), it can again be determined 368 that the relief device has opened correctly, due to the line pressure exceeding set pressure of the relief device. If, however, the detected temperature and rate of temperature change both do not agree with what would be expected for a properly-functioning, open relief device, an alternative conclusion can be made that the relief device is malfunctioning 385. If the temperature flag is not set, again an alternative determination can be made that operating pressure is too high 385 in the pressurized system line.

In addition to the examples described above, additional determinations can also be generated based on temperature and pressure data received from temperature and pressure sensors operating in connection with a relief device or inlet line. Indeed, in some implementations, additional diagnostic steps can be performed based on or triggered by another, earlier determinations or diagnoses. For instance, a

determination that a relief device has opened and is operating properly can trigger monitoring of a subsequent change in relief device temperature, indicating and confirming that the relief device has correctly returned to its closed state. As another example, where a malfunction or other abnormal operating condition or state is detected in a relief device, additional or closer monitoring or diagnostic steps can be performed on the targeted device to determine the cause of the abnormal reading. For example, non-temperature or non-pressure related monitoring can occur, for example supplemental readings including those from ultrasonic, audio, or plug displacement sensing devices. Additionally, in systems employing multiple pressure relief devices, a determination of a particular operating condition in one pressure relief device, such as an open state, can trigger comparison of operating behavior, temperature and pressure data of that device with other relief devices, lines, vessels, or subsystems in the system. For instance, where open conditions 390 or incorrect expected values or operating pressures are determined 385 concurrently at multiple pressure relief devices, additional determinations can be made relating to system- or subsystem-wide performance.

In each of the examples described in FIGS. 3A-C, determinations regarding the operation and performance of the inlet line 325 and relief device 315 can be communicated 395 to (or within) a computing device or alert system allowing the detected operational condition to be displayed, recorded, or otherwise prepared for presentation to a user or manager of the pressurized system. In some implementations, one or more computing devices, each having a processor, can perform one or more steps in the example diagnostic techniques illustrated in FIGS. 3A-C, together with related presentation or recording of the generated data and determinations (e.g., 355, 360, 370, 385, 390). For example, the diagnostic steps illustrated in FIGS. 3A-C can be encoded in a machine-readable medium, such as volatile or non-volatile memory including, without limitation, magnetic media, optical media (such as CD ROM, DVD-ROM, or Blu-ray disks), random access memory (RAM), read-only memory (ROM), EPROM, EEPROM, and flash memory devices, removable media, or any other suitable local or remote memory component. Instructions stored in the machine readable media can be read by a computing device or other device having a processor capable of reading the machine instructions and performing the corresponding operations and functions.

FIG. 4A is a schematic diagram 400 illustrating an example computing system 405 adapted to diagnose and monitor the operating conditions and performance of a pressurized system 410 including at least one pressure relief device. In this example, pressurized system 410 includes a plurality of sensing devices, including at least one temperature sensing device (e.g., 415, 420) capable of being used in the derivation of a rate of change in temperature at a pressure relief device. Additionally, pressurized system 410 can also include at least one pressure sensing device (e.g., 425, 430) capable of producing a pressure reading for an inlet line or vessel connected to at least one of the pressure relief devices. Temperature signals, representative of the detected temperature, or change in temperature at the pressure sensing devices, can be communicated from the temperature sense devices 415, 420 to a sensor communication module 435. Similarly, pressure signals, representative of detected pressure within an inlet line, can be communicated from the pressure sense devices 425, 430 to the sensor communication module 435. In some implementations, the sensor communication module 435 can both receive transmissions from and transmit communications to individual sense devices 425-435. For instance, in some implementations, a received (or calculated) non-zero change in temperature based on a temperature sensor reading (e.g., 415) can trigger a request, from the sensor communication module 435, for a contemporary pressure reading from a corresponding pressure sensor (e.g., 425).

The sensor communication module 435 can pass received sensor data to, or even instructions from, a processor 440. The processor 440 can perform functions, calculations, and operations necessary for allowing diagnostic algorithms, data calls, data recording, and other system 405 activities to be completed. For instance, processor 440 can download or upload received temperature and/or pressure data into a memory 445, for example, to recognize a change in temperature relative to an earlier-received temperature reading. Memory 445 may be sufficiently large to store expansive amounts of historical data, sensed data, or processor determination results for purposes of generating reports or performing trend analyses or other historical data processing.

In some implementations, such as in the example techniques of FIGS. 3A, 3B, and 3C, functions performed by processor 440 may require comparing received or manipulated temperature or pressure data with expected value data to generate diagnostic determinations based on the received data. In some examples, processor

440 may query a database 450 for expected value data, constants, scripts, and other data to be used in processing received sensor data. Database 450 can be, for example, managed by database management software (DBMS) such as MySQL, Oracle, IBM DB2, or others. In some instances, in addition to querying and accessing records in database 450, processor 440 can also create and modify records and other database data, for example, in connection with a determination made by the processor 440. For instance, it may be determined that an expected value is incorrect, such as an expected relief device set pressure value, based on a history of determined open conditions at pressures lower than the expected set pressure stored in the database 450. In response to this determination, processor 440 can issue a command to modify the expected set pressure value for the relief device to bring the expected set pressure value in-line with observed, historical data. Processor 440 can also be used to supplement or change expected values managed in database 450, for example, to reflect changes to equipment or processes in the physical, pressurized system, such as a new or repaired pressure relief device.

Turning to the example database record 452 illustrated in FIG. 4B stored in database 450, a database 450 can be useful for dynamically accessing and processing expected value records that vary across sub-systems, processes, and equipment. For instance, a pressurized system may include multiple pressure relief devices, for example, with each relief device corresponding to a separate vessel, line, or subsystem. In this example, a first subsystem includes a first pressure relief device and a second subsystem a second pressure relief device. A pressure sensor P1 in the first subsystem can be used together with a temperature sensor T1, measuring temperature at a first pressure relief device, to monitor operation of the first pressure relief device. Correspondingly, a pressure sensor P2 and temperature sensor T2 can be used in connection with monitoring the second subsystem and second pressure relief device. Additionally, in the example of FIG.. 4B, the pressurized system 410 can be capable of operating in three distinct states 455, 460, 465. These distinct states 455, 460, 465 may utilize fluids of varying thermodynamic properties, and of different temperatures and different pressures, thereby affecting at least some of the expected values corresponding to the first and second relief devices and subsystems.

In the example illustrated in FIG. 4B, the pressurized system operates, in a first state 455, using a first fluid at first a pressure. In the second state 460, the fluid used remains at the same temperature as the fluid in the first state 455, but in this state, at a

lower pressure. In the third state 465, a fluid is employed at an operating pressure OP nearer the operating pressure of the first state, but at a lower temperature than both the first and second states. The first, second, and third fluids can be the same fluid or different fluids. The pressure relief valve in the first subsystem has a set pressure almost twice as high as the set pressure of the second relief valve. Additionally, in this example, the physical set pressure of the relief valve is constant in each of the three operating states 455, 460, 465 and, as a result, the corresponding expected value for the set pressure of each relief device is also constant, as stored in the record 452. Given the differences in the make-up and performance of the first and second systems, the other expected values stored in the record 452 for the subsystems vary depending upon the operating state of the pressurized system. Accordingly, when the pressurized system is in a first operating state a signal or message can be transmitted to the computing device 405 alerting the computing device that the pressurized system 410 is operating in a first state. Consequently, when the processor 440 of the computing device 405 needs to access data from the database 450, the processor can send, in its database query, a value corresponding to the present operating condition of the pressurized system 410. For example, the processor 440 may submit a query to the database 450, during the first operating state 455, requesting retrieval of an expected open rate value for the first pressure relief device. The retrieved value can be used, for instance, to compare a retrieved non-zero temperature change reading to the expected open rate value. When requesting retrieval, the processor can query the database for the particular open rate value corresponding to the pressure relief device and operating condition of the system, in this example retrieving a value 470 of "4.3" from record 452. As operation of the pressurized system cycles, or otherwise adjusts, future database queries can take the new operating condition of the system into account. For example, if the operating state 455 ends and a second operating state 460 begins, a query for an expected open rate value for the first pressure relief device during the second operating state 460 could automatically return an open rate value 475 of "4.5," corresponding to the second operating condition 460.

A number of embodiments of the invention have been described. Nevertheless, it will be understood that various modifications may be made without departing from the spirit and scope of the invention. Accordingly, other embodiments are within the scope of the following claims.

WHAT IS CLAIMED IS:

1. A computer-implemented method for monitoring operation of at least one pressure relief valve, each pressure relief valve containing an internal flow passage with a valve seat and valve plug disposed therein, the method comprising:

sensing the temperature of a portion of the internal flow passage or a fluid in the internal flow passage downstream of the valve seat;

generating a valve temperature signal representative of the temperature of the portion of the internal flow passage or the fluid in the internal flow passage downstream of the valve seat;

monitoring the valve temperature signal to detect a rate of change in the temperature of the portion of the internal flow passage or the fluid in the internal flow passage downstream of the valve seat;

sensing the internal pressure of an inlet pressure line connected to the internal flow passage upstream of the valve seat;

generating a line pressure signal representative of the internal pressure of the inlet pressure line;

comparing the line pressure signal against at least one expected line pressure value to determine a line pressure status; and

determining operational status of the pressure relief valve based at least in part on the detected rate of change in the temperature of the portion of the internal flow passage or the fluid in the internal flow passage and at least in part on the determined line pressure status.

2. The method of claim 1, wherein the line pressure signal is compared against at least one expected line pressure value in response to detection of a non-zero rate of change in the fluid temperature of the pressure relief valve body downstream of the valve seat.

3. The method of one of the preceding claims further comprising:

comparing the line pressure signal to a value representing an expected operating pressure of the inlet pressure line;

comparing the line pressure signal to a value representing an expected set pressure of the pressure relief valve; and

comparing the detected rate of change in the temperature of the fluid to a value representing an expected rate of change in temperature of fluid in the pressure relief valve when the pressure relief valve is in opened state.

4. The method of claim 3, wherein at least one of the values representing an expected operating pressure or the value representing an expected rate of change in temperature of fluid in an opened pressure relief valve comprise a plurality of values, wherein in each value in the plurality of values corresponds to an operating state of the inlet pressure line.

5. The method of one of the preceding claims further comprising transmitting the valve temperature signal to a remote computer, wherein the valve temperature is monitored at the remote computer.

6. The method of one of the preceding claims further comprising transmitting the line pressure signal to a remote computer, wherein the internal pressure of the inlet pressure line is monitored at the remote computer.

7. The method of one of the preceding claims further comprising:

sensing the ambient temperature outside of and in proximity to the pressurized inlet line.

8. The method of claim 8 further comprising:

generating an ambient temperature signal representative of the sensed ambient temperature.

9. The method of claim 9 further comprising:

comparing the internal temperature signal to the ambient temperature signal to determine at least one temperature relationship.

10. The method of one of the preceding claims further comprising comparing the detected rate of change in the temperature of the fluid in the pressure relief valve downstream of the valve seat against at least one expected rate of change value for the temperature of fluid in the pressure relief valve downstream of the valve seat.

11. The method of one of the preceding claims further comprising:

monitoring the line pressure signal to detect a rate of change in the internal pressure of the inlet pressure line.

12. The method of one of the preceding claims, wherein the line pressure signal is compared against expected line pressure values in response to detection of a non-zero rate of change one of the temperature of the fluid downstream of the valve seat or internal pressure of the inlet pressure line.

13. The method of one of the preceding claims further comprising:

setting at least one of a temperature flag, if a rate of change in the temperature of

the fluid downstream of the valve seat is detected, or a pressure flag, if a rate of change in the internal pressure of the inlet pressure line is detected.

14. The method of claim 13,

wherein determining operational status of the pressure relief valve is further based on whether the temperature flag or pressure flag is set.

15. The method of one of the preceding claims, wherein the temperature is sensed near a surface of the internal flow passage downstream of the valve seat.

16. The method of one of the preceding claims, wherein sensing the temperature of a portion of the internal flow passage comprises sensing the temperature of an internal fluid volume near the portion of the internal flow passage downstream of the valve seat.

17. A system for determining operational status of at least one pressure relief valve, each pressure relief valve containing an internal flow passage with a valve seat and valve plug disposed therein, the system comprising:

a inlet pressure line connected to an upstream end of the internal flow passage of a pressure relief valve, the inlet pressure line comprising

a pressure sensor adapted to measure the internal pressure of a fluid in the inlet pressure line and to generate an inlet line pressure signal representative of the internal pressure of the inlet pressure line;

a temperature sensor adapted to measure the temperature of a portion of the internal flow passage or a fluid in the internal flow passage downstream of the valve seat and to generate a valve temperature signal representative of the temperature of the portion of the internal flow passage or the fluid in the internal flow passage downstream of the valve seat;

a computing device adapted to determine:

1) line pressure status based on a comparison of the line pressure signal and at least one expected pressure value;

2) a rate of change in the temperature of the portion of the internal flow passage or the fluid in the internal flow passage based at least on the valve temperature signal; and

3) operational status of the at least one pressure relief valve based at least in part on the line pressure status and at least in part on the rate of change in the temperature of the portion of the internal flow passage or the fluid in the internal flow passage.

18. The system of claim 17 wherein the computing device is remote from the at least one pressure relief valve and each pressure relief valve further comprises a communication device adapted to communicate the internal temperature signal to the remote computing device.

19. The system of one of the preceding claims wherein the computing device is remote from the pressurized inlet line, the pressurized inlet line further comprising a communication device adapted to communicate the line pressure signal to the remote computing device.

20. The system of one of the preceding claims wherein the computing device is further adapted to determine an open state of the pressure relief valve based on a comparison of the rate of change in downstream fluid temperature and at least one expected temperature change value.

21. The system of claim 20 wherein the computing device comprises a database adapted to store at least one of the at least one expected pressure value or the at least one expected temperature change value.

22. The system of claim20 or 21 wherein the at least one expected temperature change value comprises at least an expected open valve rate of change

23. The system of one of the preceding claims wherein the at least one expected pressure value comprises an operational pressure of the pressurized inlet line.

24. The system of one of the preceding claims wherein the inlet line further comprises a second temperature sensor adapted to measure the ambient temperature outside of and in proximity to the pressurized inlet line.

25. The system of one of the preceding claims wherein the pressure relief valve is one of a pneumatic, electromagnetic, pilot, or spring-operated relief valve.

26. The system of one of the preceding claims wherein the computing device is further adapted to:

determine a rate of change in line pressure based at least on the line pressure signal;

determine operational status of the at least one pressure relief valve based at least on the rate of change in line pressure.

27. The system of one of the preceding claims further comprising a database adapted to store values of the line pressure signal and the downstream fluid

temperature signal, wherein the computing device is adapted to access values stored in the database to determine operational status of the at least one pressure relief valve.

28. The system of claim 27, wherein the database is further adapted to store one of a temperature flag, in response to a detected non-zero rate of change in downstream fluid temperature, or pressure flag, in response to a detected non-zero rate of change in line pressure.

29. The system of claim 28, wherein the computing device is further adapted to determine operational status of the at least one pressure relief valve based on whether the temperature flag or pressure flag is set.

30. The system of one of the preceding claims wherein the temperature sensor is disposed on an interior surface of the internal flow passage or in an internal volume of the internal flow passage.

31. The system of one of the preceding claims wherein the inlet line further comprises a second temperature sensor adapted to measure the ambient temperature outside of and in proximity to the pressurized inlet line.

32. A system according to claims 17 to 31 further comprising a memory means in which a computer program is stored, wherein the computer program is adopted to carry out said determination and/or calculation steps.

33. A computer-program product storing instructions which when executed by at least one processor cause the at least one processor to perform a method according to any one of the claims from 1 to 16.

34. A computer-implemented method for monitoring operation of one or more pressure relief valves, each relief valve containing an internal flow passage with a valve seat and valve plug disposed therein, the method comprising:

sensing the temperature of a fluid in the internal flow passage downstream of the valve seat;

generating a valve temperature signal representative of the temperature of the fluid downstream of the valve seat;

monitoring the valve temperature signal to detect a rate of change in the temperature of the fluid downstream of the valve seat;

sensing the internal pressure of an inlet pressure line connected to the internal flow passage upstream of the valve seat;

generating a line pressure signal representative of the internal pressure of the inlet pressure line;

comparing the line pressure signal against at least one expected line pressure value to determine a line pressure status; and

determining operational status of the pressure relief valve based at least in part on the detected rate of change of the fluid temperature downstream of the valve seat and at least in part on the determined line pressure status.

35. The method of claim 34, wherein the line pressure signal is compared against at least one expected line pressure value in response to detection of a non-zero rate of change in the fluid temperature of the pressure relief valve body downstream of the valve seat.

36. The method of claim 35 further comprising:

comparing the line pressure signal to a value representing an expected operating pressure of the inlet pressure line;

comparing the line pressure signal to a value representing an expected set pressure of the pressure relief valve; and

comparing the detected rate of change in the temperature of the fluid to a value representing an expected rate of change in temperature of fluid in the pressure relief valve when the pressure relief valve is in opened state.

37. The method of claim 36, wherein at least one of the values representing an expected operating pressure or the value representing an expected rate of change in temperature of fluid in an opened pressure relief valve comprise a plurality of values, wherein in each value in the plurality of values corresponds to an operating state of the inlet pressure line.

38. The method of claim 34 further comprising transmitting the valve temperature signal to a remote computer, wherein the valve temperature is monitored at the remote computer.

39. The method of claim 34 further comprising transmitting the line pressure signal to a remote computer, wherein the internal pressure of the inlet pressure line is monitored at the remote computer.

40. The method of claim 34 further comprising:

sensing the ambient temperature outside of and in proximity to the pressurized inlet line;

generating an ambient temperature signal representative of the sensed ambient temperature; and

comparing the internal temperature signal to the ambient temperature signal to determine at least one temperature relationship.

41. The method of claim 34 further comprising comparing the detected rate of change in the temperature of the fluid in the pressure relief valve downstream of the valve seat against at least one expected rate of change value for the temperature of fluid in the pressure relief valve downstream of the valve seat.

42. The method of claim 34 further comprising:

monitoring the line pressure signal to detect a rate of change in the internal pressure of the inlet pressure line;

wherein the line pressure signal is compared against expected line pressure values in response to detection of a non-zero rate of change one of the temperature of the fluid downstream of the valve seat or internal pressure of the inlet pressure line.

43. The method of claim 42 further comprising:

setting at least one of a temperature flag, if a rate of change in the temperature of the fluid downstream of the valve seat is detected, or a pressure flag, if a rate of change in the internal pressure of the inlet pressure line is detected;

wherein determining operational status of the pressure relief valve is further based on whether the temperature flag or pressure flag is set.

44. A system for determining operational status of pressure relief valves comprising:

a pressurized inlet line connected to an upstream end of an internal flow passage of a pressure relief valve, the inlet line comprising:

a pressure sensor adapted to measure the internal pressure of a fluid in the pressurized line and convert the measured pressure into a representative inlet line pressure signal;

a temperature sensor adapted to measure the temperature of a fluid in the internal flow passage downstream of a valve seat of a valve plug disposed in the internal passage and convert the measured temperature of the fluid into a representative downstream fluid temperature signal;

a computing device adapted to determine:

1) line pressure status based on a comparison of the line pressure signal and at least one expected pressure value;

2) a rate of change in downstream fluid temperature based at least on the downstream fluid temperature signal; and

3) operational status of the at least one pressure relief valve based at least on the line pressure status and rate of change in downstream fluid temperature.

45. The system of claim 44 wherein the computing device is remote from the at least one pressure relief valve and each pressure relief valve further comprises a communication device adapted to communicate the internal temperature signal to the remote computing device.

46. The system of claim 44 wherein the computing device is remote from the pressurized inlet line, the pressurized inlet line further comprising a communication device adapted to communicate the line pressure signal to the remote computing device.

47. The system of claim 44 wherein the computing device is further adapted to determine an open state of the pressure relief valve based on a comparison of the rate of change in downstream fluid temperature and at least one expected temperature change value.

48. The system of claim 47 wherein the computing device comprises a database storing at least one of the at least one expected pressure value or the at least one expected temperature change value.

49. The system of claim 47 wherein the at least one expected temperature change value comprises at least an expected open valve rate of change

50. The system of claim 44 wherein the at least one expected pressure value comprises an operational pressure of the pressurized inlet line.

51. The system of claim 44 wherein the inlet line further comprises a second temperature sensor adapted to measure the ambient temperature outside of and in proximity to the pressurized inlet line.

52. The system of claim 44 wherein the pressure relief valve is one of a pneumatic, electromagnetic, pilot, or spring-operated relief valve.

53. The system of claim 44 wherein the computing device is further adapted to:

determine a rate of change in line pressure based at least on the line pressure signal;

determine operational status of the at least one pressure relief valve based at least on the rate of change in line pressure.

54. The system of claim 53 further comprising a database adapted to store values of the line pressure signal and the downstream fluid temperature signal,

wherein the computing device is adapted to access values stored in the database to determine operational status of the at least one pressure relief valve.

55. The system of claim 54, wherein the database is further adapted to store one of a temperature flag, in response to a detected non-zero rate of change in downstream fluid temperature, or pressure flag, in response to a detected non-zero rate of change in line pressure; and

the computing device is further adapted to determine operational status of the at least one pressure relief valve based on whether the temperature flag or pressure flag is set.

56. A computer-implemented method for monitoring operation of one or more pressure relief valves, each relief valve containing an internal flow passage with a valve seat and valve plug disposed therein, the method comprising:

sensing the temperature of a portion of the internal flow passage downstream of the valve seat;

generating a valve temperature signal representative of the temperature of the portion of the internal flow passage downstream of the valve seat;

monitoring the valve temperature signal to detect a rate of change in the temperature of the portion of the internal flow passage downstream of the valve seat;

sensing the internal pressure of an inlet pressure line connected to the internal flow passage upstream of the valve seat;

generating a line pressure signal representative of the internal pressure of the inlet pressure line;

comparing the line pressure signal against at least one expected line pressure value to determine a line pressure status; and

determining operational status of the pressure relief valve based at least in part on the detected rate of change of the temperature of the portion of the internal flow passage downstream of the valve seat and at least in part on the determined line pressure status.

57. The method of claim 56 wherein the temperature is sensed near a surface of the internal flow passage downstream of the valve seat.

58. The method of claim 56 wherein sensing the temperature of a portion of the internal flow passage comprises sensing the temperature of an internal fluid volume near the portion of the internal flow passage downstream of the valve seat.

59. A system for determining operational status of pressure relief valves comprising:

a pressurized inlet line connected to an upstream end of an internal flow passage of the pressure relief valve comprising:

a pressure sensor adapted to measure the internal pressure of a fluid in the pressurized line and convert the measured pressure into a representative inlet line pressure signal;

a temperature sensor adapted to measure the temperature of a portion of the internal flow passage downstream of a valve seat of a valve plug disposed in the internal passage and convert the measured temperature of the portion of the internal flow passage into a representative valve temperature signal;

a computing device adapted to determine:

1) line pressure status based on a comparison of the line pressure signal and at least one expected pressure value;

2) a rate of change in temperature of the portion of the internal flow passage based at least on the valve temperature signal; and

3) operational status of the at least one pressure relief valve based at least on the line pressure status and rate of change in temperature of the portion of the internal flow passage.

60. The system of claim 59wherein the temperature sensor is disposed on an interior surface of the internal flow passage.

61. The system of claim 59 wherein the temperature sensor is disposed in an internal volume of the internal flow passage.

62. The system of claim 59 wherein the inlet line further comprises a second temperature sensor adapted to measure the ambient temperature outside of and in proximity to the pressurized inlet line.

63. The system of claim 59 wherein the computing device is remote from the at least one pressure relief valve and each pressure relief valve further comprises a communication device adapted to communicate the internal temperature signal to the remote computing device.

64. The system of claim 59 wherein the computing device is remote from the pressurized inlet line, the pressurized inlet line further comprising a communication device adapted to communicate the line pressure signal to the remote computing device.

65. The system of claim 59 wherein the computing device is further adapted to determine an open state of the pressure relief valve based on a comparison of the rate of change in downstream fluid temperature and at least one expected temperature change value.

66. The system of claim 65 wherein the computing device comprises a database storing at least one of the at least one expected pressure value or the at least one expected temperature change value.

67. The system of claim 65 wherein the at least one expected temperature change value comprises at least an expected open valve rate of change

68. The system of claim 65 wherein the at least one expected pressure value comprises an operational pressure of the pressurized inlet line.

69. The system of claim 65 wherein the inlet line further comprises a second temperature sensor adapted to measure the ambient temperature outside of and in proximity to the pressurized inlet line.

70. The system of claim 65 wherein the pressure relief valve is one of a pneumatic, electromagnetic, pilot, or spring-operated relief valve.

71. The system of claim 65 wherein the computing device is further adapted to:

determine a rate of change in line pressure based at least on the line pressure signal;

determine operational status of the at least one pressure relief valve based at least on the rate of change in line pressure.

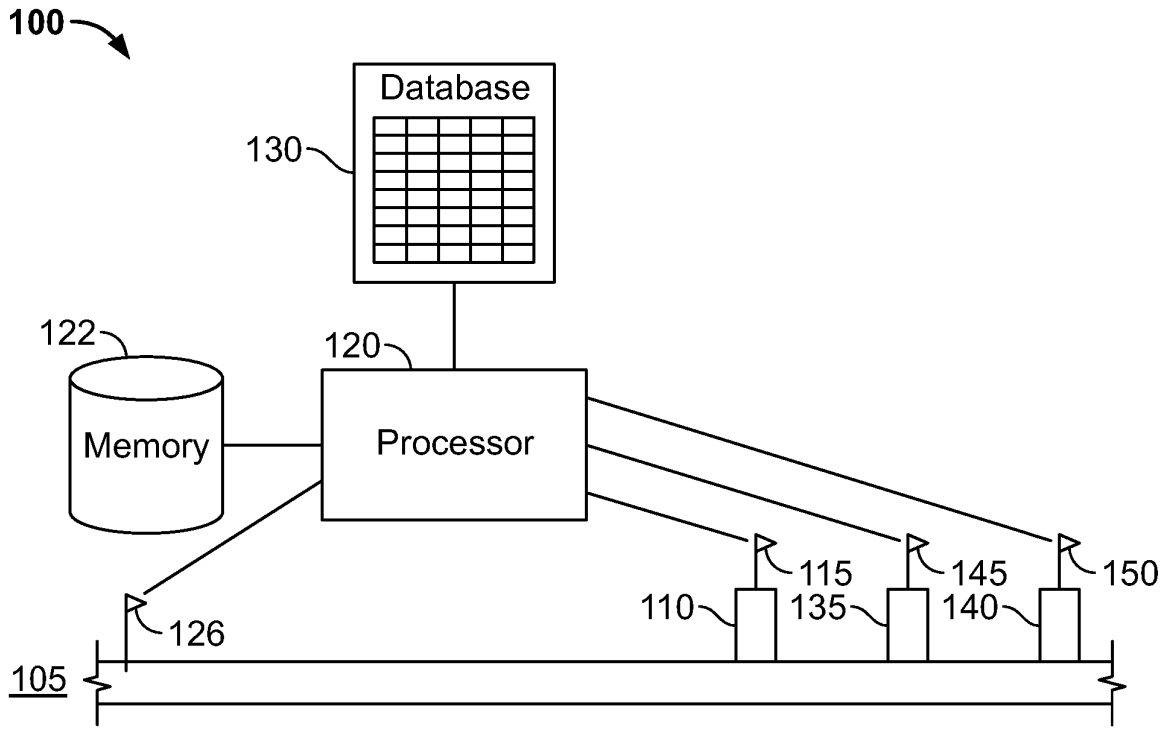

FIG. 1

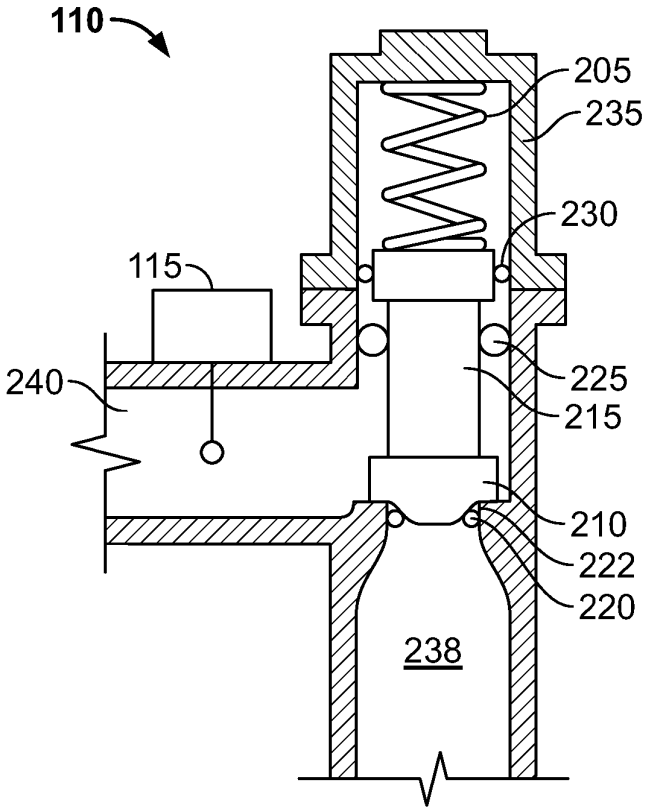

FIG. 2A

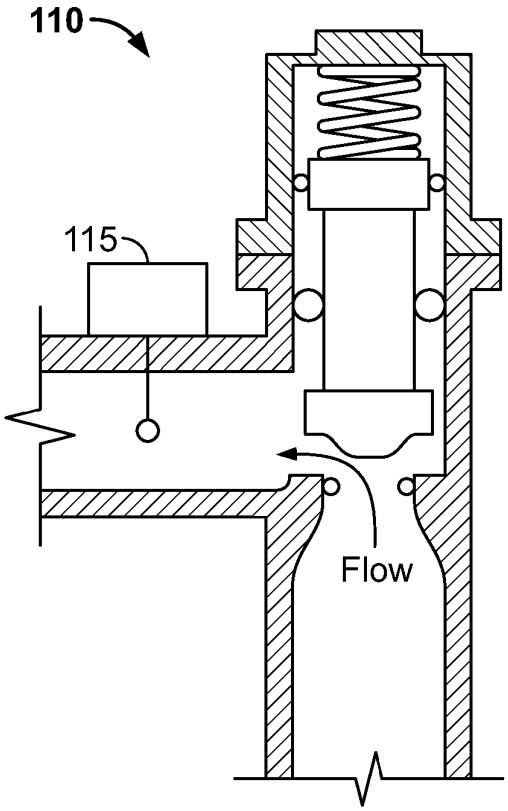

FIG. 2B

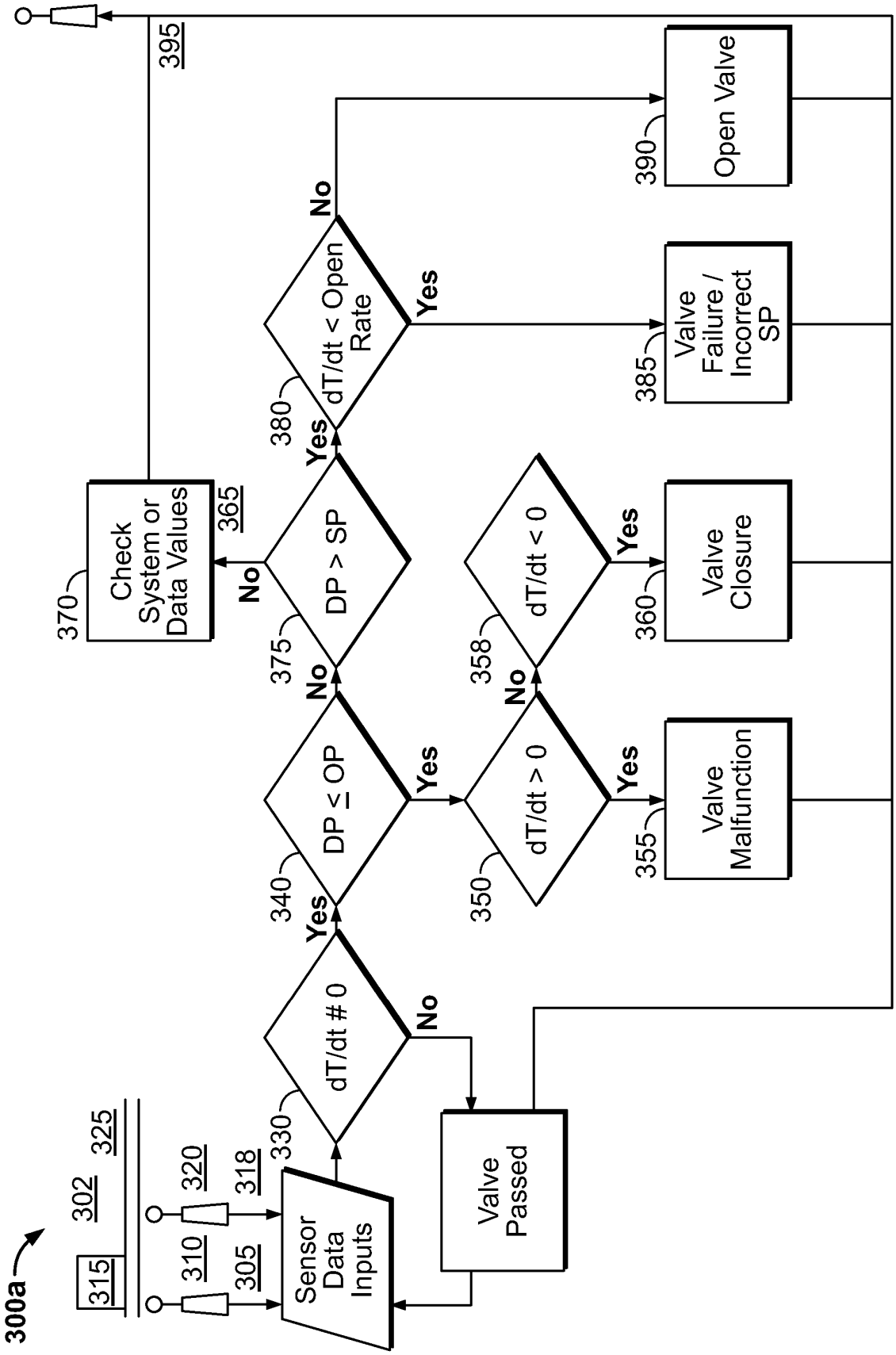
300a
315
302
325
310
305
320
318
Sensor Data Inputs
330
dT/dt # 0
Yes
No
340
DP ≤ OP
Yes
No
375
DP > SP
Yes
No
380
dT/dt < Open Rate
Yes
No
350
dT/dt > 0
Yes
No
358
dT/dt < 0
Yes
No
Valve Passed
355
Valve Malfunction
360
Valve Closure
385
Valve Failure / Incorrect SP
390
Open Valve
365
Check System or Data Values
370
395

FIG. 3A

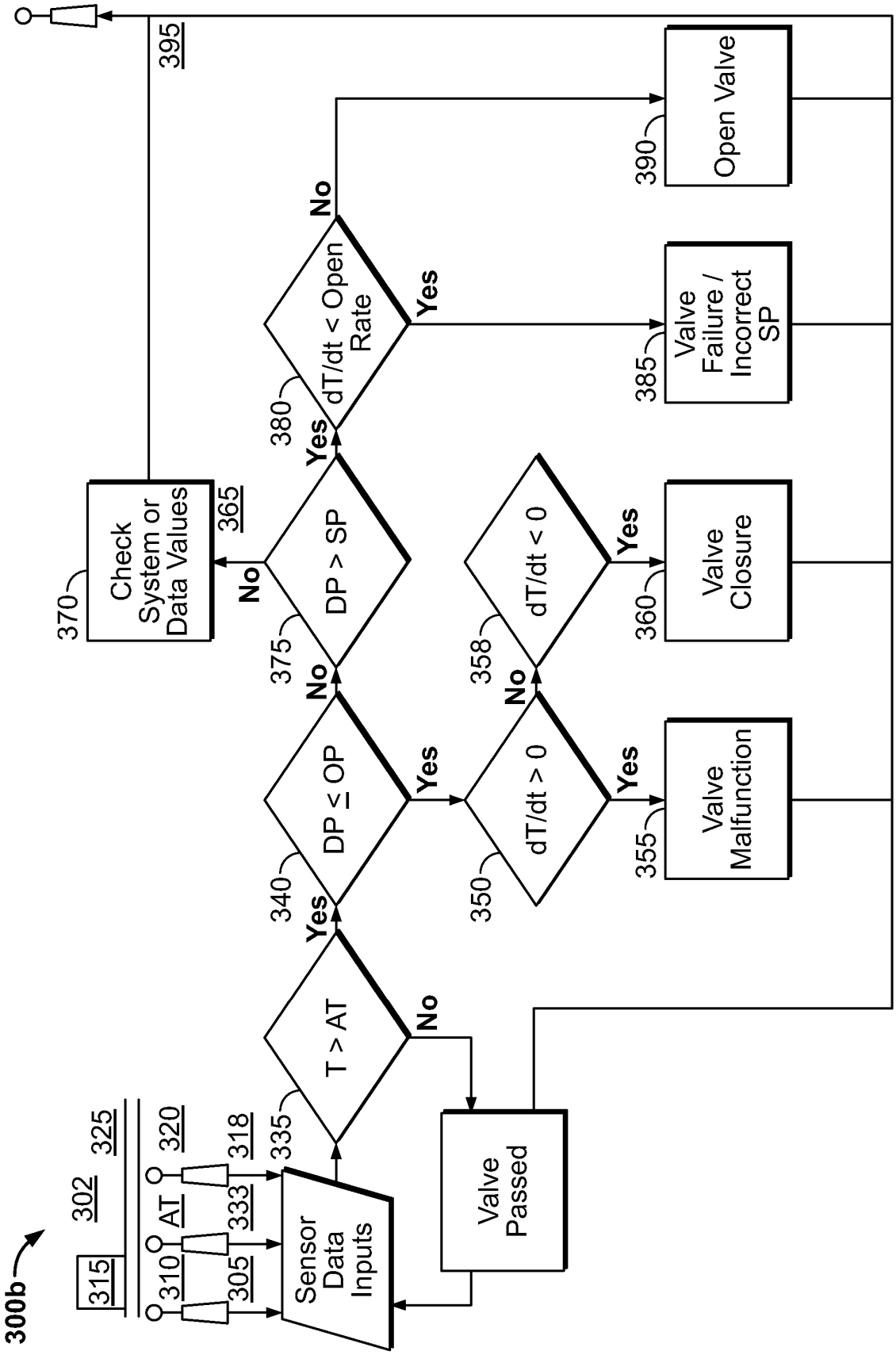
300b
315
302
325
310
AT
320
305
333
318
Sensor Data Inputs
335
T > AT
Yes
No
340
DP ≤ OP
Yes
No
375
DP > SP
Yes
No
380
dT/dt < Open Rate
Yes
No
390
Open Valve
385
Valve Failure / Incorrect SP
370
Check System or Data Values
365
395
350
dT/dt > 0
Yes
No
355
Valve Malfunction
358
dT/dt < 0
Yes
360
Valve Closure
Valve Passed

FIG. 3B

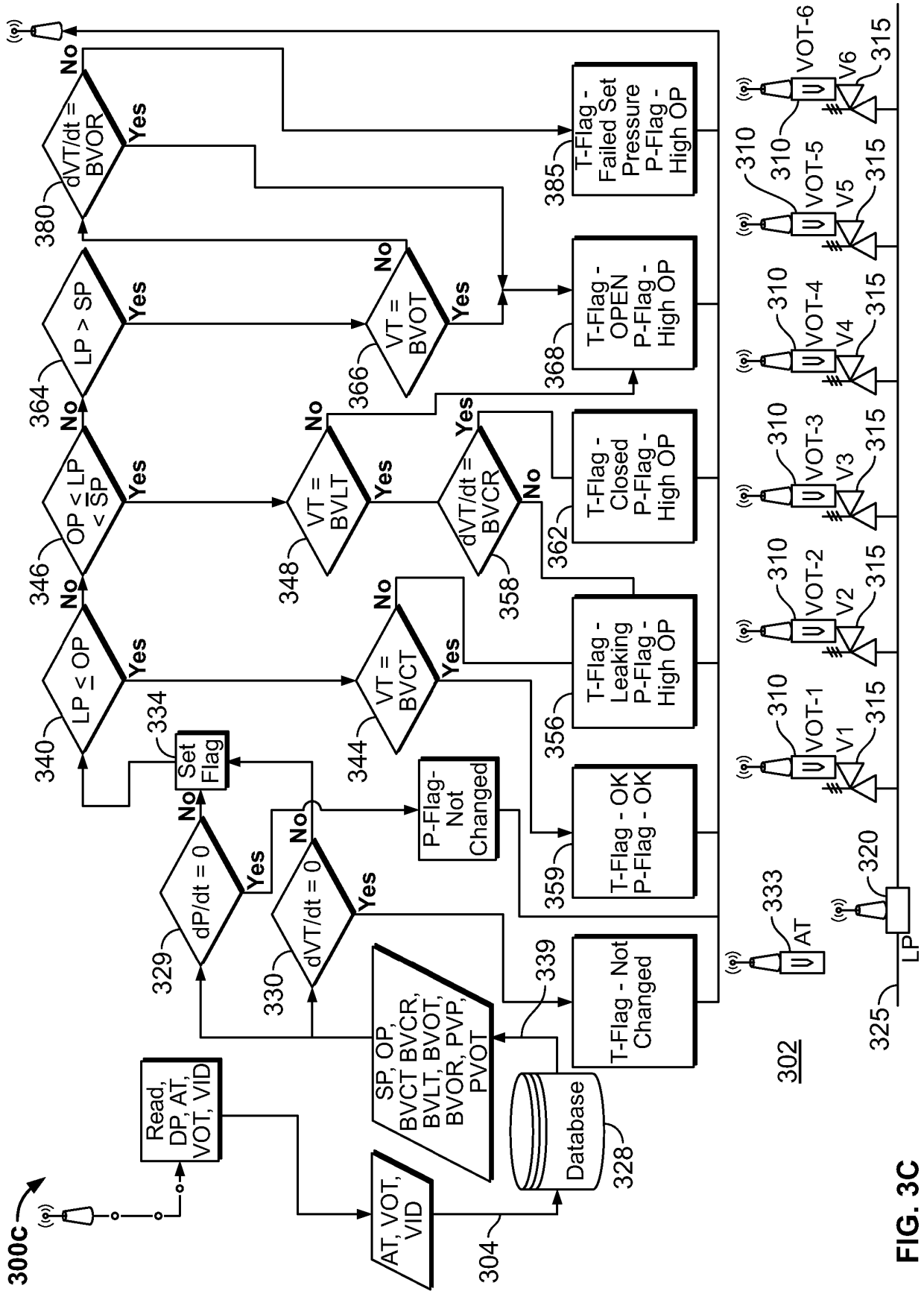
300c
Read, DP, AT, VOT, VID
AT, VOT, VID
304
SP, OP, BVCT BVCR, BVLT, BVOT, BVOR, PVP, PVOT
Database
328
339
329
dP/dt = 0
Yes
No
Set Flag
334
330
dVT/dt = 0
P-Flag- Not Changed
340
LP ≤ OP
346
OP ≤ LP ≤ SP
364
LP > SP
380
dVT/dt = BVOR
344
VT = BVCT
348
VT = BVLT
366
VT = BVOT
358
dVT/dt = BVCR
T-Flag - Not Changed
359
T-Flag - OK P-Flag - OK
356
T-Flag - Leaking P-Flag - High OP
362
T-Flag - Closed P-Flag - High OP
368
T-Flag - OPEN P-Flag - High OP
385
T-Flag - Failed Set Pressure P-Flag - High OP
310
VOT-1
VOT-2
VOT-3
VOT-4
VOT-5
VOT-6
V1
V2
V3
V4
V5
V6
315
333
AT
320
LP
325
302

FIG. 3C

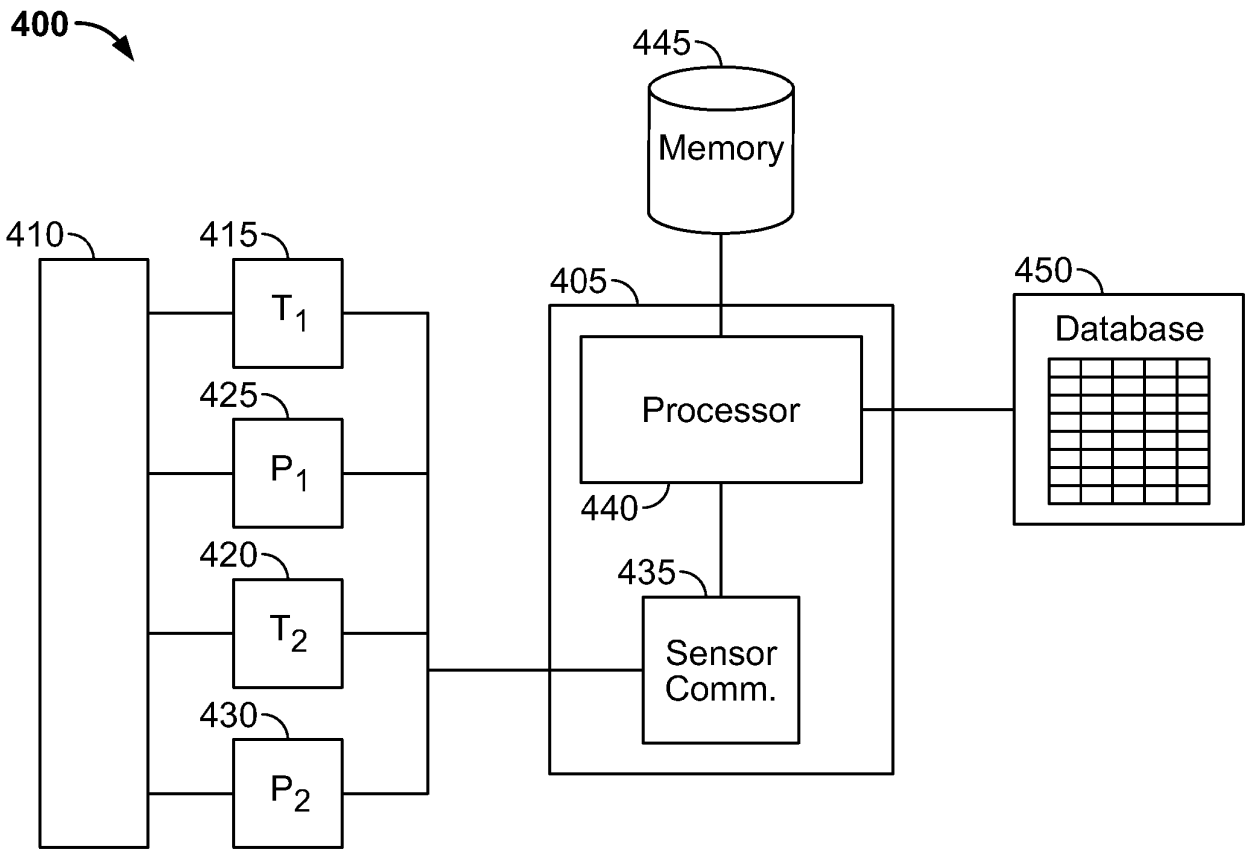

FIG. 4A

452

455 460 465

	Operation 1		Operation 2		Operation 3	
	dT/dt (open)		dT/dt (open)		dT/dt (open)	
T1	4.3 470		4.5 475		3.6	
T2	2.8		3.6		1.9	
	OP	SP	OP	SP	OP	SP
P1	432	450	350	450	405	450
P2	220	243	120	243	205	243

FIG. 4B

INTERNATIONAL SEARCH REPORT

International application No
PCT/US2010/034953

A. CLASSIFICATION OF SUBJECT MATTER
INV. F16K17/04 F16K37/00
ADD.

According to International Patent Classification (IPC) or to both national classification and IPC

B. FIELDS SEARCHED

Minimum documentation searched (classification system followed by classification symbols)
F16K G05B G05D G01D

Documentation searched other than minimum documentation to the extent that such documents are included in the fields searched

Electronic data base consulted during the international search (name of data base and, where practical, search terms used)

EPO-Internal, WPI Data

C. DOCUMENTS CONSIDERED TO BE RELEVANT

Category*	Citation of document, with indication, where appropriate, of the relevant passages	Relevant to claim No.
A	US 2009/000406 A1 (BRAZIER GEOF [US] ET AL) 1 January 2009 (2009-01-01) paragraph [0036] - paragraph [0103]; figures	1-71
A	US 2004/197624 A1 (WHEAT W SPENCER [US] ET AL WHEAT W SPENCER S [US] ET AL) 7 October 2004 (2004-10-07) paragraph [0024] - paragraph [0048]; figures	1-71
A	WO 97/44645 A2 (PLAN PODJETJE ZA PROJEKTIRANJE [SI]; LEGAT BOZO [SI]; SKOFIC PETER [SI) 27 November 1997 (1997-11-27) the whole document	1-71

-/--

[X] Further documents are listed in the continuation of Box C.

[X] See patent family annex.

* Special categories of cited documents :

"A" document defining the general state of the art which is not considered to be of particular relevance
"E" earlier document but published on or after the international filing date
"L" document which may throw doubts on priority claim(s) or which is cited to establish the publication date of another citation or other special reason (as specified)
"O" document referring to an oral disclosure, use, exhibition or other means
"P" document published prior to the international filing date but later than the priority date claimed

"T" later document published after the international filing date or priority date and not in conflict with the application but cited to understand the principle or theory underlying the invention
"X" document of particular relevance; the claimed invention cannot be considered novel or cannot be considered to involve an inventive step when the document is taken alone
"Y" document of particular relevance; the claimed invention cannot be considered to involve an inventive step when the document is combined with one or more other such documents, such combination being obvious to a person skilled in the art.
"&" document member of the same patent family

Date of the actual completion of the international search	Date of mailing of the international search report
24 August 2010	31/08/2010

Name and mailing address of the ISA/	Authorized officer
European Patent Office, P.B. 5818 Patentlaan 2 NL - 2280 HV Rijswijk Tel. (+31-70) 340-2040, Fax: (+31-70) 340-3016	Ceuca, Antonio

INTERNATIONAL SEARCH REPORT

International application No
PCT/US2010/034953

C(Continuation). DOCUMENTS CONSIDERED TO BE RELEVANT

Category*	Citation of document, with indication, where appropriate, of the relevant passages	Relevant to claim No.
A	WO 2004/036327 A1 (ZED I SOLUTIONS CANADA INC [CA]; ITO TOKU [CA]; BENTERUD KEVIN [CA]; D) 29 April 2004 (2004-04-29) page 9, last paragraph - page 43, last paragraph; figures	1-71

INTERNATIONAL SEARCH REPORT

Information on patent family members

International application No
PCT/US2010/034953

Patent document cited in search report	Publication date	Patent family member(s)	Publication date
US 2009000406 A1	01-01-2009	WO 2009151747 A1	17-12-2009
US 2004197624 A1	07-10-2004	AU 2004227788 A1	21-10-2004
		CA 2521368 A1	21-10-2004
		CN 1943064 A	04-04-2007
		EP 1629548 A2	01-03-2006
		JP 2007524960 T	30-08-2007
		US 2006057438 A1	16-03-2006
		WO 2004091009 A2	21-10-2004
WO 9744645 A2	27-11-1997	AU 3053997 A	09-12-1997
		SI 9600167 A	31-12-1997
WO 2004036327 A1	29-04-2004	AU 2003273693 A1	04-05-2004
		CA 2408901 A1	18-04-2004
		CA 2493321 A1	29-04-2004
		EP 1552352 A1	13-07-2005
		JP 2006503354 T	26-01-2006
		US 2003154056 A1	14-08-2003

UNITED STATES PATENT AND TRADEMARK OFFICE

UNITED STATES DEPARTMENT OF COMMERCE
United States Patent and Trademark Office
Address: COMMISSIONER FOR PATENTS
P.O. Box 1450
Alexandria, Virginia 22313-1450
www.uspto.gov

APPLICATION NO.	FILING DATE	FIRST NAMED INVENTOR	ATTORNEY DOCKET NO.	CONFIRMATION NO.
12/473,105	05/27/2009	Roger Dale Danzy	15826-0241001 / IV-08-001	8917

26231 7590 04/13/2011
FISH & RICHARDSON P.C. (DA)
P.O. BOX 1022
MINNEAPOLIS, MN 55440-1022

EXAMINER
JOHNSON III, FRED

ART UNIT	PAPER NUMBER
2857	

NOTIFICATION DATE	DELIVERY MODE
04/13/2011	ELECTRONIC

Please find below and/or attached an Office communication concerning this application or proceeding.

The time period for reply, if any, is set in the attached communication.

Notice of the Office communication was sent electronically on above-indicated "Notification Date" to the following e-mail address(es):

PATDOCTC@fr.com

UNITED STATES PATENT AND TRADEMARK OFFICE

Commissioner for Patents
United States Patent and Trademark Office
P.O. Box 1450
Alexandria, VA 22313-1450
www.uspto.gov

FISH & RICHARDSON P.C. (DA)
P.O. BOX 1022
MINNEAPOLIS MN 55440-1022

In re Application of
Roger DANZY
Application No.: 12/473,105
Filed: 27 May 2009
Attorney Docket No.: 15826-0241001 / IV-08-001
For: SYSTEM AND METHOD FOR MONITORING AND CONTROLLING PRESSURE RELIEF VALVE PERFORMANCE

: DECISION ON REQUEST TO : PARTICIPATE IN THE PATENT : PROSECUTION HIGHWAY : PROGRAM AND PETITION : TO MAKE SPECIAL UNDER : 37 CFR 1.102(a)

This is a decision on the request to participate in the PCT Patent Prosecution Highway (PCT-PPH) pilot program and the petition under 37 CFR 1.102(a), filed 29 March 2011, to make the above-identified application special.

The request and petition are **DISMISSED**.

Discussion

A grantable request to participate in the PCT-PPH pilot program and petition to make special require:

(1) The U.S. application must have an eligible relationship to one or more PCT applications where the ISA or IPEA are the JPO, EPO, KIPO, IPAU, Russia, Spain, Finland, Austria, or USPTO;

(2) At least one claim in the PCT application has novelty, inventive step, and industrial applicability and must be free of any observations in Box VIII in the latest work product in the international stage or applicant must identify and explain why the claim(s) is/are not subject to the observation in Box VIII;

(3) Applicant must submit a copy of the claim(s) from the PCT application(s) that have novelty, inventive step, and industrial applicability along with an English translation thereof and a statement that the English translation is accurate, if the claims are not in the English language;

(4) All the claims in the U.S. application must sufficiently correspond or be amended to sufficiently correspond to the claim(s) that have novelty, inventive step, and industrial applicability in the PCT application(s);

(5) Examination of the U.S. application has not begun;

(6) Applicant must submit a copy of the latest international work product from the PCT application indicating that the claim(s) have novelty, inventive step, and industrial applicability along with an English translation thereof and a statement that the English translation is accurate if the latest international work product is not in the English language;

(7) Applicant must submit an IDS listing the documents cited by the PCT examiner in the international work product along with copies of documents except U.S. patents or U.S. patent application publications.

Requirements (1) and (3-7) above are considered to have been met. However, the request to participate in the PPH pilot program and petition fails meet requirement (2).

Regarding the requirement of condition (2), applicant has failed to identify and explain why the claims are not subject to the observation in Box VIII of the Written Opinion (ISA/237).

Applicant is given **ONE** opportunity within a time period of **ONE MONTH or THIRTY DAYS**, whichever is longer, from the mailing date of this decision to correct the deficiencies. **NO EXTENSION OF TIME UNDER 37 CFR 1.136 IS PERMITTED.** If the deficiencies are not corrected with the time period given, the application will await action in its regular turn.

Response must be filed via the Electronic Filing System (EFS) using the document description: Petition to make special under PCT – Patent Pros Hwy. Any preliminary amendments and IDS submitted with the PPH documents must be separately indexed as a preliminary amendment and IDS, respectively.

Telephone inquiries concerning this decision should be directed to Lee W. Young at 571-272-4549.

All other inquiries concerning the examination or status of the application is accessible in the PAIR system at http://www.uspto.gov/ebc/index.html.

Lee W. Young
TQAS Technology Center 2800 - Semiconductors,
Electrical & Optical Systems & Components

Attorney Docket No.: 15826-0241001 / IV-08-001

IN THE UNITED STATES PATENT AND TRADEMARK OFFICE

Applicant	: Roger Dale Danzy	Art Unit	: 3753
Serial No.	: 12/473,105	Examiner	: Unknown
Filed	: May 27, 2009	Conf. No.	: 8917
Title	: SYSTEM AND METHOD FOR MONITORING AND CONTROLLING PRESSURE RELIEF VALVE PERFORMANCE		

Commissioner for Patents
P.O. Box 1450
Alexandria, VA 22313-1450

RESPONSE TO DECISION ON REQUEST TO PARTICIPATE IN THE PPH PROGRAM AND PETITION TO MAKE SPECIAL UNDER 37 C.F.R. § 1.102(e)

In response to the Decision on Request to Participate in the PPH Program and Petition to Make Special Under 37 C.F.R. § 1.102(e), mailed April 13, 2011 ("Petition Decision"), denying Applicant's Request and Petition, filed March 29, 2011, Applicant hereby submits the following remarks. Regarding the Petition Decision's statement that Applicant has failed to identify and explain why the claims are not subject to the observation in Box VIII of the Written Opinion (ISA/237), Applicant respectfully asserts that the pending claims of the present Application are not subject to the observations in Box VIII of the Written Opinion, because these observations are inapplicable to U.S. patent practice.

No fees are believed due. If this is incorrect, however, the Commissioner is authorized to apply any charges or credits to Deposit Account No. 06-1050, referencing the attorney docket number shown above.

CERTIFICATE OF MAILING BY EFS-WEB FILING

I hereby certify that this paper was filed with the Patent and Trademark Office using the EFS-WEB system on this date: April 21, 2011.

Respectfully submitted,

Date: April 21, 2011

/Matthew K. Wernli/
Matthew K. Wernli
Reg. No. 63,173

Customer Number 26231
Fish & Richardson P.C.
Telephone: (512) 226-8131
Facsimile: (877) 769-7945

11147851.doc

UNITED STATES PATENT AND TRADEMARK OFFICE

UNITED STATES DEPARTMENT OF COMMERCE
United States Patent and Trademark Office
Address: COMMISSIONER FOR PATENTS
P.O. Box 1450
Alexandria, Virginia 22313-1450
www.uspto.gov

APPLICATION NO.	FILING DATE	FIRST NAMED INVENTOR	ATTORNEY DOCKET NO.	CONFIRMATION NO.
12/473,105	05/27/2009	Roger Dale Danzy	15826-0241001 / IV-08-001	8917

26231 7590 04/27/2011
FISH & RICHARDSON P.C. (DA)
P.O. BOX 1022
MINNEAPOLIS, MN 55440-1022

EXAMINER
JOHNSON III, FRED

ART UNIT	PAPER NUMBER
2857	

NOTIFICATION DATE	DELIVERY MODE
04/27/2011	ELECTRONIC

Please find below and/or attached an Office communication concerning this application or proceeding.

The time period for reply, if any, is set in the attached communication.

Notice of the Office communication was sent electronically on above-indicated "Notification Date" to the following e-mail address(es):

PATDOCTC@fr.com

UNITED STATES PATENT AND TRADEMARK OFFICE

Commissioner for Patents
United States Patent and Trademark Office
P.O. Box 1450
Alexandria, VA 22313-1450
www.uspto.gov

FISH & RICHARDSON P.C. (DA)
P.O. BOX 1022
MINNEAPOLIS MN 55440-1022

In re Application of
Roger DANZY
Application No.: 12/473,105
Filed: 27 May 2009
Attorney Docket No.: 15826-0241001 / IV-08-001
For: SYSTEM AND METHOD FOR MONITORING AND CONTROLLING PRESSURE RELIEF VALVE PERFORMANCE

: DECISION ON REQUEST TO
: PARTICIPATE IN THE PATENT
: PROSECUTION HIGHWAY
: PROGRAM AND PETITION
: TO MAKE SPECIAL UNDER
: 37 CFR 1.102(a)

This is a decision on the request to participate in the PCT Patent Prosecution Highway (PCT-PPH) pilot program and the petition under 37 CFR 1.102(a), filed 29 March 2011 and renewed on 21 April 2011, to make the above-identified application special.

The request and petition are **GRANTED**.

Discussion

A grantable request to participate in the PCT-PPH pilot program and petition to make special require:

(1) The U.S. application must have an eligible relationship to one or more PCT applications where the ISA or IPEA are the JPO, EPO, KIPO, or USPTO;

(2) At least one claim in the PCT application has novelty, inventive step, and industrial applicability and must be free of any observations in Box VIII in the latest work product in the international stage or applicant must identify and explain why the claim(s) is/are not subject to the observation in Box VIII;

(3) Applicant must submit a copy of the claim(s) from the PCT application(s) that have novelty, inventive step, and industrial applicability along with an English translation thereof and a statement that the English translation is accurate, if the claims are not in the English language;

(4) All the claims in the U.S. application must sufficiently correspond or be amended to sufficiently correspond to the claim(s) that have novelty, inventive step, and industrial applicability in the PCT application(s);

(5) Examination of the U.S. application has not begun;

(6) Applicant must submit a copy of the latest international work product from the PCT application indicating that the claim(s) have novelty, inventive step, and industrial applicability along with an English translation thereof and a statement that the English translation is accurate if the latest international work product is not in the English language;

(7) Applicant must submit an IDS listing the documents cited by the PCT examiner in the international work product along with copies of documents except U.S. patents or U.S. patent application publications.

The request to participate in the PCT-PPH pilot program and petition comply with the above requirements. Accordingly, the above-identified application has been accorded "special" status.

Telephone inquiries concerning this decision should be directed to Lee W. Young at 571-272-4549.

All other inquiries concerning the examination or status of the application is accessible in the PAIR system at http://www.uspto.gov/ebc.index.html.

This application will be forwarded to the examiner for action on the merits commensurate with this decision once this application's formality reviews have been completed.

Lee W. Young
TQAS Technology Center 2800 - Semiconductors,
Electrical & Optical Systems & Components

Doc Code: PET.GREEN
Document Description: Petition for Green Tech Pilot

PTO/SB/420 (05-10)
Approved for use through 01/31/2011. OMB 0651-0062
U.S. Patent and Trademark Office; U. S. DEPARTMENT OF COMMERCE
Under the Paperwork Reduction Act of 1995, no persons are required to respond to a collection of information unless it displays a valid OMB control number.

PETITION TO MAKE SPECIAL UNDER THE GREEN TECHNOLOGY PILOT PROGRAM

Attorney Docket Number: CBOARD.029A	Application Number (if known): 12/473,138	Filing date: May 27, 2009

First Named Inventor: Wade H. Brown

Title: EXTRUSION OF POLYURETHANE COMPOSITE MATERIALS

APPLICANT HEREBY REQUESTS TO PARTICIPATE IN THE GREEN TECHNOLOGY PILOT PROGRAM FOR THE ABOVE-IDENTIFIED APPLICATION. See Instruction Sheet on page 2.

This petition must be timely filed electronically using the USPTO electronic filing system, EFS-Web.

1. By filing this petition:

   Applicant is requesting early publication: Applicant hereby requests early publication under 37 CFR 1.219 and the publication fee set forth in 37 CFR 1.18(d) accompanies this request.

2. By filing this petition: applicant is agreeing to make an election without traverse in a telephonic interview and elect an invention that meets the eligibility requirements set forth in the notice titled "Pilot Program for Green Technologies Including Greenhouse Gas Reduction," as modified by the notice titled "Elimination of Classification Requirement in the Green Technology Pilot Program," each of which was published in the Federal Register, if the Office determines that the claims are not obviously directed to a single invention.

3. This request is accompanied by statements of special status for the eligibility requirement.

4. The application contains no more than three (3) independent claims and twenty (20) total claims.

5. The application does not contain any multiple dependent claims.

6. Other attachments: _____

Signature /Brent Johnson/	Date 09-23-10
Name (Print/Typed) Brent Johnson, Ph.D.	Registration Number 51,851

***Note**: Signatures of all the inventors or assignees of record of the entire interest or their representative(s) are required in accordance with 37 CFR 1.33 and 11.18. Please see 37 CFR 1.4(d) for the form of the signature. If necessary, submit multiple forms for more than one signature, see below*.*

☐ *Total of _____ forms are submitted.

The information is required to obtain or retain a benefit by the public which is to file (and by the USPTO to process) an application. Confidentiality is governed by 35 U.S.C. 122 and 37 CFR 1.11 and 1.14. This collection is estimated to take 1 hour to complete, including gathering, preparing, and submitting the completed application form to the USPTO. Time will vary depending upon the individual case. Any comments on the amount of time you require to complete this form and/or suggestions for reducing this burden, should be sent to the Chief Information Officer, U.S. Patent and Trademark Office, U.S. Department of Commerce, P.O. Box 1450, Alexandria, VA 22313-1450. DO NOT SEND FEES OR COMPLETED FORMS TO THIS ADDRESS. **SEND TO: Commissioner for Patents, P.O. Box 1450, Alexandria, VA 22313-1450.**

If you need assistance in completing the form, call 1-800-PTO-9199 and select option 2.

Under the Paperwork Reduction Act of 1995, no persons are required to respond to a collection of information unless it displays a valid OMB control number.

Instruction Sheet for Petition to Make Special Under the Green Technology Pilot Program

(Not to be Submitted to the USPTO)

The following is a summary of the requirements (for more information see the notices (i) "Pilot Program for Green Technologies Including Greenhouse Gas Reduction" and (ii) "Elimination of Classification Requirement in the Green Technology Pilot Program," available on the USPTO web site at http://www.uspto.gov/patents/init_events/green_tech.jsp):

(1) The application must be a non-reissue, non-provisional utility application filed under 35 U.S.C. 111(a), or an international application that has entered the national stage in compliance with 35 U.S.C. 371. The application must be previously filed before the publication date of the notice cited above. Reexamination proceedings are excluded from this pilot program.

(2) The application must contain three or fewer independent claims and twenty or fewer total claims. The application must not contain any multiple dependent claims. For an application that contains more than three independent claims or twenty total claims, or multiple dependent claims, applicant must file a preliminary amendment in compliance with 37 CFR 1.121 to cancel the excess claims and/or the multiple dependent claims at the time the petition to make special is filed.

(3) The claims must be directed to a single invention that materially enhances the quality of the environment, or that materially contributes to: (1) the discovery or development of renewable energy resources; (2) the more efficient utilization and conservation of energy resources; or (3) green house gas emission reduction (see the eligibility requirements of sections II and III of the notice (i) cited above). The petition must include a statement that, if the USPTO determines that the claims are directed to multiple inventions (e.g., in a restriction requirement), applicant will agree to make an election without traverse in a telephonic interview, and elect an invention that meets the eligibility requirements in section II or III of the notice (i) cited above.

(4) The petition to make special must be timely filed electronically using the USPTO electronic filing system, EFS-Web, and selecting the document description of "Petition for Green Tech Pilot" on the EFS-Web screen. Applicant should use form PTO/SB/420, which is available as a Portable Document Format (PDF) fillable form in EFS-Web and on the USPTO Web site.

(5) The petition to make special must be filed at least one day prior to the date that a first Office action (which may be an Office action containing only a restriction requirement) appears in the Patent Application Information Retrieval (PAIR) system. Applicant may check the status of the application using PAIR.

(6) The petition to make special must be accompanied by a request for early publication in compliance with 37 CFR 1.219 and the publication fee set forth in 37 CFR 1.18(d).

Privacy Act Statement

The **Privacy Act of 1974 (P.L. 93-579)** requires that you be given certain information in connection with your submission of the attached form related to a patent application or patent. Accordingly, pursuant to the requirements of the Act, please be advised that: (1) the general authority for the collection of this information is 35 U.S.C. 2(b)(2); (2) furnishing of the information solicited is voluntary; and (3) the principal purpose for which the information is used by the U.S. Patent and Trademark Office is to process and/or examine your submission related to a patent application or patent. If you do not furnish the requested information, the U.S. Patent and Trademark Office may not be able to process and/or examine your submission, which may result in termination of proceedings or abandonment of the application or expiration of the patent.

The information provided by you in this form will be subject to the following routine uses:

1. The information on this form will be treated confidentially to the extent allowed under the Freedom of Information Act (5 U.S.C. 552) and the Privacy Act (5 U.S.C 552a). Records from this system of records may be disclosed to the Department of Justice to determine whether disclosure of these records is required by the Freedom of Information Act.
2. A record from this system of records may be disclosed, as a routine use, in the course of presenting evidence to a court, magistrate, or administrative tribunal, including disclosures to opposing counsel in the course of settlement negotiations.
3. A record in this system of records may be disclosed, as a routine use, to a Member of Congress submitting a request involving an individual, to whom the record pertains, when the individual has requested assistance from the Member with respect to the subject matter of the record.
4. A record in this system of records may be disclosed, as a routine use, to a contractor of the Agency having need for the information in order to perform a contract. Recipients of information shall be required to comply with the requirements of the Privacy Act of 1974, as amended, pursuant to 5 U.S.C. 552a(m).
5. A record related to an International Application filed under the Patent Cooperation Treaty in this system of records may be disclosed, as a routine use, to the International Bureau of the World Intellectual Property Organization, pursuant to the Patent Cooperation Treaty.
6. A record in this system of records may be disclosed, as a routine use, to another federal agency for purposes of National Security review (35 U.S.C. 181) and for review pursuant to the Atomic Energy Act (42 U.S.C. 218(c)).
7. A record from this system of records may be disclosed, as a routine use, to the Administrator, General Services, or his/her designee, during an inspection of records conducted by GSA as part of that agency's responsibility to recommend improvements in records management practices and programs, under authority of 44 U.S.C. 2904 and 2906. Such disclosure shall be made in accordance with the GSA regulations governing inspection of records for this purpose, and any other relevant (*i.e.*, GSA or Commerce) directive. Such disclosure shall not be used to make determinations about individuals.
8. A record from this system of records may be disclosed, as a routine use, to the public after either publication of the application pursuant to 35 U.S.C. 122(b) or issuance of a patent pursuant to 35 U.S.C. 151. Further, a record may be disclosed, subject to the limitations of 37 CFR 1.14, as a routine use, to the public if the record was filed in an application which became abandoned or in which the proceedings were terminated and which application is referenced by either a published application, an application open to public inspection or an issued patent.
9. A record from this system of records may be disclosed, as a routine use, to a Federal, State, or local law enforcement agency, if the USPTO becomes aware of a violation or potential violation of law or regulation.

UNITED STATES PATENT AND TRADEMARK OFFICE

UNITED STATES DEPARTMENT OF COMMERCE
United States Patent and Trademark Office
Address: COMMISSIONER FOR PATENTS
P.O. Box 1450
Alexandria, Virginia 22313-1450
www.uspto.gov

APPLICATION NO.	FILING DATE	FIRST NAMED INVENTOR	ATTORNEY DOCKET NO.	CONFIRMATION NO.
12/473,138	05/27/2009	Wade H. Brown	CBOARD.029A	8984

20995 7590 10/04/2010
KNOBBE MARTENS OLSON & BEAR LLP
2040 MAIN STREET
FOURTEENTH FLOOR
IRVINE, CA 92614

EXAMINER
SULTANA, NAHIDA

ART UNIT	PAPER NUMBER
1791	

NOTIFICATION DATE	DELIVERY MODE
10/04/2010	ELECTRONIC

Please find below and/or attached an Office communication concerning this application or proceeding.

The time period for reply, if any, is set in the attached communication.

Notice of the Office communication was sent electronically on above-indicated "Notification Date" to the following e-mail address(es):

jcartee@kmob.com
efiling@kmob.com
eOAPilot@kmob.com

UNITED STATES PATENT AND TRADEMARK OFFICE

Commissioner for Patents
United States Patent and Trademark Office
P.O. Box 1450
Alexandria, VA 22313-1450
www.uspto.gov

KNOBBE MARTENS OLSON & BEAR LLP
2040 MAIN STREET
FOURTEENTH FLOOR
IRVINE CA 92614

OCT 04 2010

In re Application of	:	
Brown	:	DECISION ON PETITION
Application No. 12/473,138	:	TO MAKE SPECIAL UNDER
Filed: 5/27/2009	:	THE GREEN TECHNOLOGY
Attorney Docket No. **CBOARD.029A**	:	PILOT PROGRAM

This is a decision on the petition under 37 CFR 1.102, filed 9/23/2010, to make the above-identified application special under the pilot program for applications pertaining to Green Technologies as set forth in 74 Federal Register Notice 64666 (December 8, 2009) and amended by 75 Federal Register Notice 28554 (May 21, 2010).

The petition is **DISMISSED**.

If reconsideration of this decision is desired, a petition for reconsideration must be filed within ONE (1) MONTH OR THIRTY (30) DAYS from the mail date of this decision, whichever is longer. No extension of this time limit can be granted under 37 CFR 1.136(a) or (b). The petition for reconsideration should include an exhaustive attempt to provide the lacking item(s) noted below, since, after a decision on the petition for reconsideration, no further reconsideration or review of the matter will be undertaken by the Director.

A grantable petition to make an application special under 37 CFR 1.102 and the pilot program as set forth in 74 FR 64666 must be directed to a nonprovisional application filed under 35 USC 111(a) or be a national stage entry under 35 USC 371, exclusive of any reissue applications and be filed prior to the date of the notice, December 8, 2009.

In order to qualify for special status, the following requirements must be met. 1) The application must have no more than 3 independent claims and no more than 20 total claims. 2) The application must not contain any multiple dependent claims. 3) The petition must state the basis for seeking special status, i.e., the claimed invention either: A) materially enhances the quality of the environment or B) materially contributes to: i) the discovery or development of renewable energy resources, ii) the more efficient utilization and conservation of energy resources, or iii) greenhouse gas emission reduction. 4) If the disclosure is not clear on its face that the claimed invention materially contributes under category (A) or (B), the petition must be accompanied by

a statement by the applicant, assignee, or an attorney/agent registered to practice before the Office explaining how the materiality standard is met. 5) A statement that applicant will agree to make an election without traverse in a telephonic interview if a restriction requirement is made by the examiner. 6) The petition to make special must be filed electronically. 7) The petition must be filed at least one day prior to the date that a first Office Action appears in the Patent Application Information Retrieval (PAIR) system. 8) The petition must be accompanied by a request for early publication in compliance with 37 CFR 1.219 and include the publication fee as set forth in 37 CFR 1.18(d).

The requirement for a fee for consideration of the petition to make special for applications pertaining to Green Technologies has been waived.

The petition lacks item(s) 4.

In regard to item 4, petitioner should note that the instant petition includes a statement identifying the basis for the special status (i.e., whether the instant invention (1) materially enhances the quality of the environment or materially contributes to (2) development of renewable energy resources or energy conservation, or (3) greenhouse gas reduction) as required by sections II and III of the notice. However, as stated in the notice, applicant must also provide a statement pertaining to the materiality standard if the application disclosure is not clear on its face as to the materiality of the basis for the special status of the invention. It is not agreed that the application on its face meets that materiality standard.

The instant claims are directed to a method for forming a polymeric composite material in an extruder which does not directly meet the requirements as set forth in the notice. It is pointed out that the Notice also states that the materiality standard "does not permit an applicant to enjoy an applicant to speculate as to how a hypothetical end-user might specially apply the invention in a manner that could materially enhance the quality of the environment. Nor does such standard permit an applicant to enjoy the benefit of advanced examination merely because some minor aspect of the claimed invention may enhance the quality of the environment."

Any reconsideration of this decision should be submitted through the USPTO electronic filing system, EFS-Web, and selecting the document description of "Petition for Green Tech Pilot" on the EFS-Web screen.

Telephone inquiries concerning this decision should be directed to Tom Dunn at 571-272-1171.

The application is being forwarded to the Technology Center Art Unit 1791 for action in its regular turn.

/Tom Dunn/

Tom Dunn
Quality Assurance Specialist
Technology Center 1700

UNITED STATES PATENT AND TRADEMARK OFFICE

Commissioner for Patents
United States Patent and Trademark Office
P.O. Box 1450
Alexandria, VA 22313-1450
www.uspto.gov

MAILED

SEP 2 1 2010

OFFICE OF PETITIONS

CASIMIR JONES, S.C.
2275 DEMING WAY, SUITE 310
MIDDLETON WI 53562

In re Application of	:	
Gary D. Glick et al.	:	
Application No. 12/473,144	:	NOTICE
Filed: May 27, 2009	:	
Attorney Docket No. **UM-09868/US-3/CON**	:	

This is a notice regarding your request for acceptance of a fee deficiency submission under 37 CFR 1.28.

The Office no longer investigates or rejects original or reissue patent under 37 CFR 1.56. **1098 Off. Gaz. Pat. Office 502 (January 3, 1989)**. Therefore, nothing in this Notice is intended to imply that an investigation was done.

Your fee deficiency submission under 37 CFR 1.28 is hereby **ACCEPTED**.

This patent is no longer entitled to small entity status. Accordingly, all future fees paid in this patent must be paid at the large entity rate.

Inquiries related to this communication should be directed to the undersigned at (571) 272-2783.

/Tredelle D. Jackson/
Paralegal Specialist
Office of Petitions

UNITED STATES PATENT AND TRADEMARK OFFICE

Commissioner for Patents
United States Patent and Trademark Office
P.O. Box 1450
Alexandria, VA 22313-1450
www.uspto.go

PEPPER/MILLENNIATA
50TH FLOOR
500 GRANT STREET
PITTSBURGH, PA 15219-2502

MAILED
JAN 26 2011
OFFICE OF PETITIONS

Applicant: Asplund et al.
Appl. No.: 12/473,249
Filing Date: May 27, 2009
Title: DATA STORAGE MEDIA CONTAINING CARBON AND METAL LAYERS
Attorney Docket: BYGU.144972/135359.10601
Pub. No.: US 2010/0068444 A1
Pub. Date: March 18, 2010

This is a decision on the request for a corrected patent application publication under 37 CFR 1.221(b), received on April 6, 2010, for the above-identified application.

The request is DISMISSED.

Applicant requests that the application be republished because the patent application publication contains a material error on the front page of the application wherein the title of the invention "DATA STORAGE MEDIA CONTAINING CARBON AND METAL LAYERS" is misprinted as "DATA STORAGE CONTAINING CARBON AND METAL LAYERS".

37 CFR 1.221 (b) is applicable "only when the Office makes a material mistake which is apparent from Office records.... Any request for a corrected publication or revised patent application publication other than provided as provided in paragraph (a) of this section must be filed within two months from the date of the patent application publication. This period is not extendable." A material mistake must affect the public's ability to appreciate the technical disclosure of the patent application publication, to determine the scope of the patent application publication, or to determine the scope of the provisional rights that an applicant may seek to enforce upon issuance of a patent. [1]

The error on the front page of the publication wherein the title of the invention "DATA STORAGE MEDIA CONTAINING CARBON AND METAL LAYERS" was misprinted as "DATA STORAGE CONTAINING CARBON AND METAL LAYERS" may be an Office error, but it is a not material Office error under 37 CFR 1.221. The error does not affect the understanding of the application. The mistake does not affect the public's ability to appreciate

[1] Changes to Implement Eighteen-Month Publication of Patent Applications, 65 FR 57023, 57038 (Sept. 20, 2000), 1239, Off. Gaz. Pat. Office Notices 63, 75 (Oct. 10, 2000) (final rule).

the technical disclosure of the patent application publication, or determine the scope of the patent application publication or determine the scope of the provisional rights that an applicant may seek to enforce upon issuance of a patent.

The applicant is advised that a "request for republication of an application previously published" may be filed under 37 CFR 1.221 (a). Such a request for republication "must include a copy of the application compliance with the Office's electronic filing system requirements and be accompanied by the publication fee set forth in § 1.18 (d) and the processing fee set forth in § 1.17 (i)." If the request for republication does not comply with the electronic filing system requirements, the republication will not take place and the publication fee set forth in § 1.18 (d) will be refunded. The processing fee will be retained.

A Quick Start Guide for filing a request for a Pre-Grant Publication, such as a request for republication, may be found on the link below:

http://www.uspto.gov/patents/process/file/efs/guidance/index.jsp

http://www.uspto.gov/ebc/portal/efs/pgpub_quickstart.pdf

Any request for republication under 37 CFR 1.221(a), must be submitted via the EFS system, as a "Pre-Grant Publication".

Inquiries relating to this matter may be directed to Mark Polutta at (571) 272-7709.

Mark Polutta
Senior Legal Advisor
Office of Patent Legal Administration
Office of the Deputy Commissioner
for Patent Examination Policy

UNITED STATES PATENT AND TRADEMARK OFFICE

Commissioner for Patents
United States Patent and Trademark Office
P.O. Box 1450
Alexandria, VA 22313-1450
www.uspto.gov

Pepper/Millenniata
50th Floor
500 Grant Street
Pttsburgh PA 15219-2502

MAILED
MAR 28 2011
OFFICE OF PETITIONS

In re Application of	:	
Matthew C. Asplund et al.	:	DECISION ON PETITION
Application No. 12/473,249	:	TO WITHDRAW
Filed: May 27, 2009	:	FROM RECORD
Attorney Docket No. **BYGU.144972**	:	

This is a decision on the request to withdraw as attorney of record under 37 CFR § 1.36, filed March 10, 2011.

The request is **NOT APPROVED**.

The request cannot be approved because the attorney cannot withdraw attorneys' individually when the power of attorney was originally granted by Customer Number in the Power of Attorney filed October 1, 2009.

All future communications from the Office will continue to be directed to the above-listed address until otherwise notified by applicant.

Telephone inquires concerning this decision should be directed to the undersigned at (571) 272-4584.

/JoAnne Burke/
JoAnne Burke
Petitions Examiner
Office of Petitions

UNITED STATES PATENT AND TRADEMARK OFFICE

Commissioner for Patents
United States Patent and Trademark Office
P.O. Box 1450
Alexandria, VA 22313-1450
www.uspto.go

MAILED
NOV 29 2010
OFFICE OF PETITIONS

PEPPER/MILLENNIATA
50TH FLOOR
500 GRANT STREET
PITTSBURGH, PA 15219-2502

Applicant: Asplund et al.
Appl. No.: 12/473,250
Filing Date: May 27, 2009
Title: Films Containing An Infused Oxygenated Gas And Methods For Their Preparation
Attorney Docket: BYGU.144112/135359.10201
Pub. No.: US 2010/0068529 A1
Pub. Date: March 18, 2010

This is a decision on the request for a corrected patent application publication under 37 CFR 1.221(b), received on April 6, 2010, for the above-identified application.

The request is DISMISSED.

Applicant requests that the application be republished because the patent application publication contains a material error on the front page of the application wherein the title of the invention "FILMS CONTAINING AN INFUSED OXYGENATED GAS AND METHODS FOR THEIR PREPARATION" is misprinted as "FILMS CONTAINING AND INFUSED OXYGENATED AS AND METHODS FOR THEIR PREPARATION".

37 CFR 1.221 (b) is applicable "only when the Office makes a material mistake which is apparent from Office records.... Any request for a corrected publication or revised patent application publication other than provided as provided in paragraph (a) of this section must be filed within two months from the date of the patent application publication. This period is not extendable." A material mistake must affect the public's ability to appreciate the technical disclosure of the patent application publication, to determine the scope of the patent application publication, or to determine the scope of the provisional rights that an applicant may seek to enforce upon issuance of a patent. [1]

The error on the front page of the publication wherein the title of the invention misprints "GAS" as "AS" may be an Office error, but it is a not material Office error under 37 CFR 1.221. The error does not affect the understanding of the application. The mistake does not affect the public's ability to appreciate the technical disclosure of the patent application publication, or

[1] Changes to Implement Eighteen-Month Publication of Patent Applications, 65 FR 57023, 57038 (Sept. 20, 2000), 1239, Off. Gaz. Pat. Office Notices 63, 75 (Oct. 10, 2000) (final rule).

determine the scope of the patent application publication or determine the scope of the provisional rights that an applicant may seek to enforce upon issuance of a patent.

The applicant is advised that a "request for republication of an application previously published" may be filed under 37 CFR 1.221 (a). Such a request for republication "must include a copy of the application compliance with the Office's electronic filing system requirements and be accompanied by the publication fee set forth in § 1.18 (d) and the processing fee set forth in § 1.17 (i)." If the request for republication does not comply with the electronic filing system requirements, the republication will not take place and the publication fee set forth in § 1.18 (d) will be refunded. The processing fee will be retained.

A guide for filing a request for a Pre-Grant Publication, such as a request for republication, may be found on the link below:

http://www.uspto.gov/patents/process/file/efs/guidance/index.jsp

http://www.uspto.gov/ebc/portal/efs/pgpub_quickstart.pdf

Any request for republication under 37 CFR 1.221(a), must be submitted via the EFS system, as a "Pre-Grant Publication".

Inquiries relating to this matter may be directed to Mark Polutta at (571) 272-7709.

Mark Polutta
Senior Legal Advisor
Office of Patent Legal Administration
Office of the Deputy Commissioner
for Patent Examination Policy

UNITED STATES PATENT AND TRADEMARK OFFICE

Commissioner for Patents
United States Patent and Trademark Office
P.O. Box 1450
Alexandria, VA 22313-1450
www.uspto.gov

PEPPER/MILLENNIATA
50TH FLOOR
500 GRANT STREET
PTTSBURGH PA 15219-2502

MAILED

APR 01 2011

OFFICE OF PETITIONS

In re Application of	:	
Asplund et al.	:	DECISION ON PETITION
Application No. 12/473,250	:	TO WITHDRAW
Filed: May 27, 2009	:	FROM RECORD
Attorney Docket No. BYGU.144112	:	

This is a decision on the Request to Withdraw as attorney or agent of record under 37 C.F.R. § 1.36(b), filed March 10, 2011.

The request is **NOT APPROVED**.

A grantable request to withdraw as attorney/agent of record must be signed by every attorney/agent seeking to withdraw or contain a clear indication that one attorney is signing on behalf of another/others.

The request was signed by Joseph T. Helmsen on behalf of all attorneys of record, but does not include a Customer Number. Accordingly, since the practitioners were appointed by a Customer Number, the Request must reflect withdrawal of practitioners associated with the same Customer Number.

Additionally, as set forth in MPEP 403(I), the addition or deletion of a practitioner from the list of persons associated with a Customer Number should be done by way of a Request for Customer Number Data Change (PTO/SB/124) and not a Request for Withdrawal As Attorney or Agent and Change of Correspondence Address (Form PTO/SB/83).

All future communications from the Office will continue to be directed to the above-listed address until otherwise notified by applicant.

Currently, there is no outstanding Office action that requires a reply.

Telephone inquires concerning this decision should be directed to the undersigned at (571) 272-7751. All other inquires concerning either the examination or status of the application should be directed to the Technology Center.

Joan Olszewski
Petitions Examiner
Office of Petitions

UNITED STATES PATENT AND TRADEMARK OFFICE

Commissioner for Patents
United States Patent and Trademark Office
P.O. Box 1450
Alexandria, VA 22313-1450
www.uspto.gov

AT & T LEGAL DEPARTMENT - WS
ATTN: PATENT DOCKETING
ROOM 2A-207
ONE AT & T WAY
BEDMINSTER NJ 07921

MAILED
MAY 20 2011
OFFICE OF PETITIONS

In re Application of	:	
Royce D. Jordan, Jr.	:	
Patent No. 7,953,394	:	NOTICE
Application No. 12/473,251	:	
Filed: May 27, 2009	:	
Attorney Docket No. **20009.0177USC2**		

This is a notice regarding your request for acceptance of a fee deficiency submission under 37 CFR 1.28 April 18, 2011.

The Office no longer investigates or rejects original or reissue applications under 37 CFR 1.56. **1098 Off. Gaz. Pat. Office 502 (January 3, 1989)**. Therefore, nothing in this Notice is intended to imply that an investigation was done.

Your fee deficiency submission under 37 CFR 1.28 is hereby **ACCEPTED**.

This application is no longer entitled to small entity status. Accordingly, all future fees paid in this application must be paid at the large entity rate.

Inquiries related to this communication should be directed to the undersigned at (571) 272-2783.

/Tredelle D. Jackson/
Paralegal Specialist
Office of Petitions

UNITED STATES PATENT AND TRADEMARK OFFICE

Commissioner for Patents
United States Patent and Trademark Office
P.O. Box 1450
Alexandria, VA 22313-1450
www.uspto.gov

Jesper Rorbye Angelo
P.O. Box 213
Lake Oswego OR 97034

MAILED

AUG 02 2010

OFFICE OF PETITIONS

In re Application of :
Jesper Rorbye Angelo, et al. :
Application No. 12/473,272 :
Filed: May 27, 2009 :
:

ON PETITION

This is a decision on the petition under the unintentional provisions of 37 CFR 1.137(b), filed July 14, 2010, to revive the above-identified application.

The petition is **DISMISSED**.

Any request for reconsideration of this decision must be submitted within TWO (2) MONTHS from the mail date of this decision. Extensions of time under 37 CFR 1.136(a) are permitted. The reconsideration request should include a cover letter entitled "Renewed Petition under 37 CFR 1.137(b)." This is **not** a final agency action within the meaning of 5 U.S.C. § 704.

The application became abandoned for failure to reply in a timely manner to the Notice to File Missing Parts of Nonprovisional Application (Notice), mailed June 9, 2009. The Notice set a period for reply of two (2) months from the mail date of the Notice. No extensions of time under the provisions of 37 CFR 1.136(a) were obtained. Accordingly, the application became abandoned on August 10, 2009. The Notice of Abandonment was mailed June 10, 2010.

A grantable petition under 37 CFR 1.137(b) must be accompanied by: (1) the required reply, unless previously filed; (2) the petition fee as set forth in 37 CFR 1.17(m); (3) a statement that the entire delay in filing the required reply from the due date for the reply until the filing of a grantable petition pursuant to 37 CFR 1.137(b) was unintentional; and (4) any terminal disclaimer (and fee as set forth in 37 CFR 1.20(d)) required by 37 CFR 1.137(d). Where there is a question as to whether either the abandonment or the delay in filing a petition under 37 CFR 1.137 was unintentional, the Director may require additional information. See MPEP 711.03(c)(II)(C) and (D). The instant petition lacks item(s) (1) & (3).

Item 1:

According to the Notice mailed on August 21, 2009, the reply to the Notice of Missing Parts filed on August 8, 2009 was incomplete. The $270 search fee, $110 examination fee and an

oath/declaration that identifies the residence (city and either state or foreign county) of each inventor is still required.

Item 3:

The statement of delay is not acceptable. In this regard, petitioner's attention is directed to 37 CFR 1.33(b), which states.

> (b) Amendments and other papers. Amendments and other papers, except for written assertions pursuant to § 1.27(c)(2)(ii) of this part, filed in the application must be signed by:
> (1) A registered patent attorney or patent agent of record appointed in compliance with § 1.32(b);
> (2) A registered patent attorney or patent agent not of record who acts in a representative capacity under the provisions of § 1.34;
> (3) An assignee as provided for under §3.71(b) of this chapter; or
> (4) All of the applicants (§ 1.41(b)) for patent, unless there is an assignee of the entire interest and such assignee has taken action in the application in accordance with § 3.71 of this chapter.

An unsigned amendment (or other paper) or one not properly signed by a person having authority to prosecute the application is not entered. This applies, for instance, where the amendment (or other paper) is signed by only one of two applicants and the one signing has not been given a power of attorney by the other applicant.

Therefore, as the petition is not signed by all the inventors and the record herein fails to disclose that petitioner herein (Jesper Rorbye Angelo) was ever given a power of attorney to act on behalf of inventor Mikkel Porse Rasmussen, or that he is an assignee of the entire interest and has complied with the provisions of 37 CFR 3.73(b), the petition is considered to not contain a proper statement of unintentional delay.

Further correspondence with respect to this matter should be addressed as follows:

By Mail: Mail Stop PETITION
Commissioner for Patents
P. O. Box 1450
Alexandria, VA 22313-1450

By hand: U. S. Patent and Trademark Office
Customer Service Window, Mail Stop Petitions
Randolph Building
401 Dulany Street
Alexandria, VA 22314

The centralized facsimile number is **(571) 273-8300.**

Telephone inquiries concerning this decision should be directed to the undersigned at (571) 272-2991.

Terri Johnson
Petitions Examiner
Office of Petitions

UNITED STATES PATENT AND TRADEMARK OFFICE

Commissioner for Patents
United States Patent and Trademark Office
P.O. Box 1450
Alexandria, VA 22313-1450
www.uspto.gov

Jesper Rorbye Angelo
P.O. Box 213
Lake Oswego OR 97034

MAILED

SEP 21 2010

OFFICE OF PETITIONS

In re Application of	:	
Jesper Rorbye Angelo, et al.	:	
Application No. 12/473,272	:	DECISION ON PETITION
Filed: May 27, 2009	:	
	:	

This is a decision on the renewed petition under the unintentional provisions of 37 CFR 1.137(b), filed August 25, 2010, to revive the above-identified application.

The petition is **GRANTED**.

The application became abandoned for failure to reply in a timely manner to the Notice to File Missing Parts of Nonprovisional Application (Notice), mailed June 9, 2009. The Notice set a period for reply of two (2) months from the mail date of the Notice. No extensions of time under the provisions of 37 CFR 1.136(a) were obtained. Accordingly, the application became abandoned on August 10, 2009. The Notice of Abandonment was mailed June 10, 2010.

The petition satisfies the requirements of 37 CFR 1.137(b) in that petitioner has supplied (1) the reply in the form of the declaration, the $270 search fee and the $110 examination fee, (2) the petition fee of $810, and (3) a proper statement of unintentional delay.

Telephone inquiries concerning this decision should be directed to Terri Johnson at (571) 272-2991.

This application is being referred to the Office of Patent Application Processing for appropriate action on the reply received.

/Terri Johnson/
Terri Johnson
Petitions Examiner
Office of Petitions

SPE RESPONSE FOR CERTIFICATE OF CORRECTION

Paper No.: _____

DATE : 12/15/10

TO SPE OF : ART UNIT: 1731 Attn: MCDONOUGH JAMES E

SUBJECT : Request for Certificate of Correction for Appl. No.: 12/473274 Patent No.: 7837813

CofC Mailroom date: 11/29/10

Please respond to this request for a certificate of correction within 7 days.

FOR IFW FILES:

Please review the requested changes/corrections as shown in the **COCIN** document(s) in the IFW application image. No new matter should be introduced, nor should the scope or meaning of the claims be changed.

Please complete the response (see below) and forward the completed response to scanning using document code **COCX**.

FOR PAPER FILES:

Please review the requested changes/corrections as shown in the attached certificate of correction. Please complete this form (see below) and forward it with the file to:

Certificates of Correction Branch (CofC)
Randolph Square – 9D10-A
Palm Location 7580

Tasneem Siddiqui
Certificates of Correction Branch
703-756-1593 or 703-756-1814

Thank You For Your Assistance

The request for issuing the above-identified correction(s) is hereby:
Note your decision on the appropriate box.

- ☒ **Approved** — **All** changes apply.
- ☐ **Approved in Part** — Specify below which changes **do not** apply.
- ☐ **Denied** — State the reasons for denial below.

Comments: _____

/J.A. Lorengo/ — **SPE**

1731 — **Art Unit**

UNITED STATES PATENT AND TRADEMARK OFFICE

Commissioner for Patents
United States Patent and Trademark Office
P.O. Box 1450
Alexandria, VA 22313-1450
www.uspto.gov

ELI LILLY & COMPANY
PATENT DIVISION
P.O. BOX 6288
INDIANAPOLIS, IN 46206-6288

MAILED
APR 08 2011
OFFICE OF PETITIONS

In re Application of Yiwen Li et al. :
Application No. 12/473,295 : Decision on Petition
Filing Date: May 28, 2009 :
Attorney Docket No. X18547M :

This is a decision on the "Renewed Petition Under 37 C.F.R. § 1.182 to Amend an Abandoned Application"[1] filed January 25, 2011.

The petition is **dismissed**.

Background

The specification filed with the original application papers on May 28, 2009, included a claim of priority to Application No. 61/103,394.

The application became abandoned on September 29, 2010, as a result of Applicants failure to file the issue fee and publication fee in response to a Notice of Allowance mailed June 28, 2010.

The instant petition states the specification should have included a priority claim to Application No. 61/130,394, not Application No. 61/103,394. Applicants indicate the petition is being submitted to amend the abandoned application to correct the priority claim.

Discussion

The Office does not require a party to submit a petition under 37 C.F.R. § 1.182 to amend an abandoned application when a petition under 37 C.F.R. § 1.78(a) is required for entry of the amendment.

In this case, a petition under 37 C.F.R. § 1.78(a)(6) is necessary because the correct priority claim was not filed within four months of the filing date of the instant application or 16 months

[1] Although the title of the petition states the petition is a renewed petition, Office records fail to indicate Applicants have ever filed a prior petition in this case.

of the filing date of Application No. 61/130,394. Therefore, the instant petition under 37 C.F.R. § 1.182 is dismissed as unnecessary.

Applicants submitted $130 for the petition fee for the instant petition. The fee required for a petition under 37 C.F.R. § 1.182 is $400. However, in view of the prior discussion, a fee for a petition under 37 C.F.R. § 1.182 will not be required in this case and the $130 has been credited back to Deposit Account No. 05-0840.

The Office recommends Applicants filed a petition under 37 C.F.R. § 1.78(a)(6) if Applicants wish to correct the priority claim.

As a courtesy, the Office will briefly discuss the requirements for a petition under 37 C.F.R. § 1.78(a)(6).

A petition under 37 C.F.R. § 1.78(a)(6) must be accompanied by:

(1) The reference required by 35 U.S.C. § 119(e) and 37 C.F.R. § 1.78(a)(5)(i);
(2) The surcharge set forth in 37 C.F.R. § 1.17(t), and
(3) A statement that the entire delay between the date the claim was due under 37 C.F.R. § 1.78(a)(5)(ii) and the date the claim was filed was unintentional.

As to item (1), the reference must be submitted via an amendment, which complies with the requirements set forth in 37 C.F.R. § 1.121, or an application data sheet ("ADS"), which complies with the requirements set forth in 37 C.F.R. § 1.76(b)(5). If an amendment is filed, the amendment cannot be physically part of the petition. In other words, the amendment and petition cannot be combined into a single paper. If an ADS is filed, Applicants should ensure the ADS is titled, "Supplemental Application Data Sheet."[2]

Further correspondence with respect to this matter may be submitted as follows:

By Internet: A request for reconsideration may be filed electronically using EFS Web.[3] Document Code "PET.OP" should be used if the request is filed electronically.

By mail: Mail Stop Petition
Commissioner for Patents
P.O. Box 1450
Alexandria, VA 22313-1450

By facsimile: (571) 273-8300
Attn: Office of Petitions

[2] M.P.E.P § 601.05 states, "If no ADS was originally filed, but applicant wants to submit an ADS to correct, modify, or augment the original application data, the ADS, even though it is the first-filed ADS, must be titled "Supplemental Application Data Sheet."

[3] General Information concerning EFS Web can be found at http://www.uspto.gov/patents/process/file/efs/index.jsp.

By hand: U.S. Patent and Trademark Office
Customer Service Window
Randolph Building
401 Dulany Street
Alexandria, VA 22314

Telephone inquiries regarding this communication should be directed to Petitions Attorney Steven Brantley at (571) 272-3203.

Charles Steven Brantley
Senior Petitions Attorney
Office of Petitions

UNITED STATES PATENT AND TRADEMARK OFFICE

Commissioner for Patents
United States Patent and Trademark Office
P.O. Box 1450
Alexandria, VA 22313-1450
www.uspto.gov

MAILED
AUG 24 2011
OFFICE OF PETITIONS

ELI LILLY & COMPANY
PATENT DIVISION
P.O. BOX 6288
INDIANAPOLIS, IN 46206-6288

In re Application of Yiwen Li et al.	:	
Application No. 12/473,295	:	Decision on Petition Under
Filing Date: May 28, 2009	:	37 C.F.R. § 1.78(a)(6)
Attorney Docket No. X18547M	:	

This is a decision on the petition under 37 C.F.R. § 1.78(a)(6) filed August 5, 2011, which requests acceptance of an unintentionally delayed claim under 35 U.S.C. §119(e) for the benefit of the prior-filed provisional application set forth in the concurrently filed amendment.

The petition is **GRANTED.**

A petition under 37 C.F.R. § 1.78(a)(6) is only applicable to those applications filed on or after November 29, 2000. Further, the petition is appropriate only after expiration of the period specified in 37 C.F.R. § 1.78(a)(5)(ii) and must be filed during the pendency of the nonprovisional application. In addition, the petition must be accompanied by:

(1) the reference required by 35 U.S.C. § 119(e) and 37 C.F.R. § 1.78(a)(5)(i) to the prior-filed application, unless previously submitted;
(2) the surcharge set forth in 37 C.F.R. § 1.17(t); and
(3) a statement that the entire delay between the date the claim was due under 37 C.F.R. § 1.78(a)(5)(ii) and the date the claim was filed was unintentional. The Director may require additional information where there is a question whether the delay was unintentional.

Additionally, the instant nonprovisional application must be pending at the time of filing of the reference to the prior-filed provisional application as required by 37 C.F.R. § 1.78(a)(5)(ii). Further, the nonprovisional application claiming the benefit of the prior-filed provisional application must have been filed within twelve months of the filing date of the prior-filed provisional application.

All of the above requirements having been satisfied, the late claim for priority under 35 U.S.C. § 119(e) is accepted as being unintentionally delayed.

The granting of the petition to accept the delayed benefit claim to the prior-filed application under 37 CFR 1.78(a)(6) should not be construed as meaning that this application is entitled to the benefit of the filing date of the prior-filed application. In order for this application to be entitled to the benefit of the prior-filed application, all other requirements under 35 U.S.C. §119(e) and 37 CFR 1.78(a)(4) and (a)(5) must be met. Similarly, the fact that the corrected Filing Receipt accompanying this decision on petition includes the prior-filed application should not be construed as meaning that applicant is entitled to the claim for benefit of priority to the prior-filed application noted thereon.

A corrected Filing Receipt, which includes the priority claim to the prior-filed provisional application, accompanies this decision on petition. The Office notes none of the language in the corrected Filing Receipt should be interpreted as an indication the instant application has been revived. The application remains abandoned.

Any inquiries concerning this decision may be directed to Senior Petitions Attorney Steven Brantley at (571) 272-3203. All other inquiries concerning either the examination procedures or status of the application should be directed to the Technology Center.

Charles Steven Brantley
Senior Petitions Attorney
Office of Petitions

ATTACHMENT: Corrected Filing Receipt

UNITED STATES PATENT AND TRADEMARK OFFICE

UNITED STATES DEPARTMENT OF COMMERCE
United States Patent and Trademark Office
Address: COMMISSIONER FOR PATENTS
P.O. Box 1450
Alexandria, Virginia 22313-1450
www.uspto.gov

APPLICATION NUMBER	FILING or 371(c) DATE	GRP ART UNIT	FIL FEE REC'D	ATTY.DOCKET.NO	TOT CLAIMS	IND CLAIMS
12/473,295	05/28/2009	1647	1298	X-18547M	24	3

CONFIRMATION NO. 9318

CORRECTED FILING RECEIPT

25885
ELI LILLY & COMPANY
PATENT DIVISION
P.O. BOX 6288
INDIANAPOLIS, IN 46206-6288

OC000000049457216

Date Mailed: 08/23/2011

Receipt is acknowledged of this non-provisional patent application. The application will be taken up for examination in due course. Applicant will be notified as to the results of the examination. Any correspondence concerning the application must include the following identification information: the U.S. APPLICATION NUMBER, FILING DATE, NAME OF APPLICANT, and TITLE OF INVENTION. Fees transmitted by check or draft are subject to collection. Please verify the accuracy of the data presented on this receipt. **If an error is noted on this Filing Receipt, please submit a written request for a Filing Receipt Correction. Please provide a copy of this Filing Receipt with the changes noted thereon. If you received a "Notice to File Missing Parts" for this application, please submit any corrections to this Filing Receipt with your reply to the Notice. When the USPTO processes the reply to the Notice, the USPTO will generate another Filing Receipt incorporating the requested corrections**

Applicant(s)

Yiwen Li, Jersey City, NJ;
Dan Lu, Montvale, NJ;
James Robert Tonra, Skillman, NJ;
David Surguladze, Chatham, NJ;

Power of Attorney: The patent practitioners associated with Customer Number 25885

Domestic Priority data as claimed by applicant

This appln claims benefit of 61/130,395 05/30/2008
and claims benefit of 61/130,539 05/30/2008
and claims benefit of 61/130,394 05/30/2008

Foreign Applications (You may be eligible to benefit from the **Patent Prosecution Highway** program at the USPTO. Please see http://www.uspto.gov for more information.)

If Required, Foreign Filing License Granted: 08/22/2011

The country code and number of your priority application, to be used for filing abroad under the Paris Convention, is **US 12/473,295**

Projected Publication Date: Not Applicable

Non-Publication Request: No

Early Publication Request: No

Title

ANTI-FLT3 ANTIBODIES

Preliminary Class

424

PROTECTING YOUR INVENTION OUTSIDE THE UNITED STATES

Since the rights granted by a U.S. patent extend only throughout the territory of the United States and have no effect in a foreign country, an inventor who wishes patent protection in another country must apply for a patent in a specific country or in regional patent offices. Applicants may wish to consider the filing of an international application under the Patent Cooperation Treaty (PCT). An international (PCT) application generally has the same effect as a regular national patent application in each PCT-member country. The PCT process **simplifies** the filing of patent applications on the same invention in member countries, but **does not result** in a grant of "an international patent" and does not eliminate the need of applicants to file additional documents and fees in countries where patent protection is desired.

Almost every country has its own patent law, and a person desiring a patent in a particular country must make an application for patent in that country in accordance with its particular laws. Since the laws of many countries differ in various respects from the patent law of the United States, applicants are advised to seek guidance from specific foreign countries to ensure that patent rights are not lost prematurely.

Applicants also are advised that in the case of inventions made in the United States, the Director of the USPTO must issue a license before applicants can apply for a patent in a foreign country. The filing of a U.S. patent application serves as a request for a foreign filing license. The application's filing receipt contains further information and guidance as to the status of applicant's license for foreign filing.

Applicants may wish to consult the USPTO booklet, "General Information Concerning Patents" (specifically, the section entitled "Treaties and Foreign Patents") for more information on timeframes and deadlines for filing foreign patent applications. The guide is available either by contacting the USPTO Contact Center at 800-786-9199, or it can be viewed on the USPTO website at http://www.uspto.gov/web/offices/pac/doc/general/index.html.

For information on preventing theft of your intellectual property (patents, trademarks and copyrights), you may wish to consult the U.S. Government website, http://www.stopfakes.gov. Part of a Department of Commerce initiative, this website includes self-help "toolkits" giving innovators guidance on how to protect intellectual property in specific countries such as China, Korea and Mexico. For questions regarding patent enforcement issues, applicants may call the U.S. Government hotline at 1-866-999-HALT (1-866-999-4158).

LICENSE FOR FOREIGN FILING UNDER

Title 35, United States Code, Section 184

Title 37, Code of Federal Regulations, 5.11 & 5.15

GRANTED

The applicant has been granted a license under 35 U.S.C. 184, if the phrase "IF REQUIRED, FOREIGN FILING LICENSE GRANTED" followed by a date appears on this form. Such licenses are issued in all applications where the conditions for issuance of a license have been met, regardless of whether or not a license may be required as

set forth in 37 CFR 5.15. The scope and limitations of this license are set forth in 37 CFR 5.15(a) unless an earlier license has been issued under 37 CFR 5.15(b). The license is subject to revocation upon written notification. The date indicated is the effective date of the license, unless an earlier license of similar scope has been granted under 37 CFR 5.13 or 5.14.

This license is to be retained by the licensee and may be used at any time on or after the effective date thereof unless it is revoked. This license is automatically transferred to any related applications(s) filed under 37 CFR 1.53(d). This license is not retroactive.

The grant of a license does not in any way lessen the responsibility of a licensee for the security of the subject matter as imposed by any Government contract or the provisions of existing laws relating to espionage and the national security or the export of technical data. Licensees should apprise themselves of current regulations especially with respect to certain countries, of other agencies, particularly the Office of Defense Trade Controls, Department of State (with respect to Arms, Munitions and Implements of War (22 CFR 121-128)); the Bureau of Industry and Security, Department of Commerce (15 CFR parts 730-774); the Office of Foreign AssetsControl, Department of Treasury (31 CFR Parts 500+) and the Department of Energy.

NOT GRANTED

No license under 35 U.S.C. 184 has been granted at this time, if the phrase "IF REQUIRED, FOREIGN FILING LICENSE GRANTED" DOES NOT appear on this form. Applicant may still petition for a license under 37 CFR 5.12, if a license is desired before the expiration of 6 months from the filing date of the application. If 6 months has lapsed from the filing date of this application and the licensee has not received any indication of a secrecy order under 35 U.S.C. 181, the licensee may foreign file the application pursuant to 37 CFR 5.15(b).

UNITED STATES PATENT AND TRADEMARK OFFICE

Commissioner for Patents
United States Patent and Trademark Office
P.O. Box 1450
Alexandria, VA 22313-1450
www.uspto.gov

MAILED
APR 28 2011
OFFICE OF PETITIONS

Harold G. Furlow, ESQ
260 Montauk Highway
Suite 10
Bay Shore, NY 11706

In re Application of	:	
David R. Brindle	:	
Application No. 12/473,301	:	DECISION ON PETITION
Filed: May 28, 2009	:	UNDER 37 CFR 1.78(a)(3)
Attorney Docket No. 132-2	:	

This is a decision on the petition under 37 CFR 1.78(a)(3), filed March 23, 2011, to accept an unintentionally delayed claim under 35 U.S.C. § 120 for the benefit of priority to the prior-filed application set forth in the amendment filed on March 22, 2011.

The petition is **DISMISSED**.

A petition for acceptance of a claim for late priority under 37 CFR 1.78(a)(3) is only applicable to those applications filed on or after November 29, 2000. Further, the petition is appropriate only after the expiration of the period specified in 37 CFR 1.78(a)(2)(ii). In addition, the petition under 37 CFR 1.78(a)(3) must be accompanied by:

(1) the reference required by 35 U.S.C. § 120 and 37 CFR 1.78(a)(2)(i) of the prior-filed application, unless previously submitted;
(2) the surcharge set forth in § 1.17(t); and
(3) a statement that the entire delay between the date the claim was due under 37 CFR 1.78(a)(2)(ii) and the date the claim was filed was unintentional. The Director may require additional information where there is a question whether the delay was unintentional.

The petition does not satisfy item (1) above.

The reference to add the above-noted, prior-filed application in the first sentence of the specification on page one following the title is not acceptable as drafted since it improperly incorporates by reference the prior-filed application. An incorporation by reference statement added after an application's filing date is not effective because no new matter can be added to an application after its filing date (*see* 35 U.S.C. § 132(a)). If an incorporation by reference statement is included in an amendment to the specification to add a benefit claim under 35 U.S.C. § 120 after the filing date of the application, the amendment would not be proper. When a benefit claim under 35 U.S.C. § 120 is submitted after the filing of an application, the reference to the prior application cannot include an incorporation by reference statement of the prior application. *See* Dart Industries v. Banner, 636 F.2d 684, 207 USPQ 273 (C.A.D.C. 1980). *Note* MPEP §§ 201.06(c) and 608.04(b).

Additionally, 37 CFR 1.78(a)(2)(i) requires that any nonprovisional application claiming the benefit of one or more prior-filed copending nonprovisional applications must contain or be amended to contain a reference to each such prior-filed application, identifying it by application number (consisting of the series code and serial number) and indicating the relationship of the applications. The relationship between the applications is whether the subject application is a continuation, divisional, or continuation-in-part of a prior-filed nonprovisional application. An example of a proper benefit claim is: "This application is a continuation of Application No. 10/---, filed---." A benefit claim that merely states: "This application claims the benefit of Application No. 10/---, filed---," does not comply with 37 CFR 1.72(a)(2)(i) since the proper relationship, which includes the type of continuing application, is not stated. Also, the status of each nonprovisional parent application (if it is patented or abandoned) should also be indicated, following the filing date of the parent nonprovisional application. *See* MPEP Section 201.11, Reference to Prior Nonprovisional Applications. The amendment fails to comply with the provisions of 37 CFR 1.78(a)(2)(i) and is therefore unacceptable.

If reconsideration of this decision is desired, a renewed petition under 37 CFR § 1.78(a)(3) and an Application Data Sheet or a substitute amendment (complying with the provisions of 37 CFR 1.121 and 37 CFR 1.76(b)(5)) to correct the above matter is required.

Further correspondence with respect to this matter should be addressed as follows:

By mail: Mail Stop PETITIONS
Commissioner for Patents
Post Office Box 1450
Alexandria, VA 22313-1450

By hand: Customer Service Window
Mail Stop Petitions
Randolph Building
40l Dulany Street
Alexandria, VA 22314

By fax: (571) 273-8300
ATTN: Office of Petitions

Any questions concerning this matter may be directed to undersigned at (571) 272-3226.

Andrea Smith
Petitions Examiner
Office of Petitions

UNITED STATES PATENT AND TRADEMARK OFFICE

Commissioner for Patents
United States Patent and Trademark Office
P.O. Box 1450
Alexandria, VA 22313-1450
www.uspto.gov

Harold G. Furlow, ESQ
260 Montauk Highway
Suite 10
Bay Shore, NY 11706

MAILED

OCT 26 2011

OFFICE OF PETITIONS

In re Application of :
David R. Brindle :
Application No. 12/473,301 : DECISION ON PETITION
Filed: May 28, 2009 : UNDER 37 CFR 1.78(a)(3)
Attorney Docket No. 132-2 :

This is a decision on the renewed petition under 37 CFR 1.78(a)(3), filed October 6, 2011, to accept an unintentionally delayed claim under 35 U.S.C. § 120 for the benefit of priority to the prior-filed application set forth in the concurrently filed amendment.

The petition is **GRANTED**.

A petition for acceptance of a claim for late priority under 37 CFR 1.78(a)(3) is only applicable to those applications filed on or after November 29, 2000. Further, the petition is appropriate only after the expiration of the period specified in 37 CFR 1.78(a)(2)(ii). In addition, the petition under 37 CFR 1.78(a)(3) must be accompanied by:

(1) the reference required by 35 U.S.C. § 120 and 37 CFR 1.78(a)(2)(i) of the prior-filed application, unless previously submitted;
(2) the surcharge set forth in § 1.17(t); and
(3) a statement that the entire delay between the date the claim was due under 37 CFR 1.78(a)(2)(ii) and the date the claim was filed was unintentional. The Director may require additional information where there is a question whether the delay was unintentional.

All of the above requirements having been satisfied, the late claim for priority under 35 U.S.C. § 120 is accepted as being unintentionally delayed.

The granting of the petition to accept the delayed benefit claim to the prior-filed application under 37 CFR 1.78(a)(3) should not be construed as meaning that this application is entitled to the benefit of the prior-filed application. In order for this application to be entitled to the benefit of the prior-filed application, all other requirements under 35 U.S.C. § 120 and 37 CFR 1.78(a)(1) and (a)(2) must be met. Similarly, the fact that the corrected Filing Receipt accompanying this decision on petition includes the prior-filed application should not be construed as meaning that applicant is entitled to the claim for benefit of priority to the prior-filed application noted thereon. Accordingly, the examiner will, in due course, consider this benefit claim and determine whether the application is entitled to the benefit of the earlier filing date.

A corrected Filing Receipt, which includes the priority claim to the prior-filed application, accompanies this decision on petition.

This application is being forwarded to Technology Center Art Unit 3633 for consideration by the examiner of applicant's entitlement to claim benefit of priority under 35 U.S.C. § 120 to the prior-filed application.

Any inquiries concerning this decision may be directed to the undersigned at (571) 272-3226. All other inquiries concerning either the examination procedures or status of the application should be directed to the Technology Center at (571) 272-2100.

Andrea Smith
Petitions Examiner
Office of Petitions

ATTACHMENT: Corrected Filing Receipt

UNITED STATES PATENT AND TRADEMARK OFFICE

UNITED STATES DEPARTMENT OF COMMERCE
United States Patent and Trademark Office
Address: COMMISSIONER FOR PATENTS
P.O. Box 1450
Alexandria, Virginia 22313-1450
www.uspto.gov

APPLICATION NUMBER	FILING or 371(c) DATE	GRP ART UNIT	FIL FEE REC'D	ATTY.DOCKET.NO	TOT CLAIMS	IND CLAIMS
12/473,301	05/28/2009	3633	514	132-2	22	3

CONFIRMATION NO. 9328

CORRECTED FILING RECEIPT

76635
HAROLD G. FURLOW, ESQ
260 MONTAUK HIGHWAY
SUITE 10
BAY SHORE, NY 11706

OC000000050584700

Date Mailed: 10/25/2011

Receipt is acknowledged of this non-provisional patent application. The application will be taken up for examination in due course. Applicant will be notified as to the results of the examination. Any correspondence concerning the application must include the following identification information: the U.S. APPLICATION NUMBER, FILING DATE, NAME OF APPLICANT, and TITLE OF INVENTION. Fees transmitted by check or draft are subject to collection. Please verify the accuracy of the data presented on this receipt. **If an error is noted on this Filing Receipt, please submit a written request for a Filing Receipt Correction. Please provide a copy of this Filing Receipt with the changes noted thereon. If you received a "Notice to File Missing Parts" for this application, please submit any corrections to this Filing Receipt with your reply to the Notice. When the USPTO processes the reply to the Notice, the USPTO will generate another Filing Receipt incorporating the requested corrections**

Applicant(s)

David R. Brindle, Holbrook, NY;

Power of Attorney: The patent practitioners associated with Customer Number 76635

Domestic Priority data as claimed by applicant

This application is a CIP of 12/156,155 05/29/2008

Foreign Applications (You may be eligible to benefit from the **Patent Prosecution Highway** program at the USPTO. Please see http://www.uspto.gov for more information.)

If Required, Foreign Filing License Granted: 06/04/2009

The country code and number of your priority application, to be used for filing abroad under the Paris Convention, is **US 12/473,301**

Projected Publication Date: Not Applicable

Non-Publication Request: No

Early Publication Request: No
**** SMALL ENTITY ****

Title

APPARATUS AND METHOD FOR AN ADJUSTABLE COLUMN

Preliminary Class

052

PROTECTING YOUR INVENTION OUTSIDE THE UNITED STATES

Since the rights granted by a U.S. patent extend only throughout the territory of the United States and have no effect in a foreign country, an inventor who wishes patent protection in another country must apply for a patent in a specific country or in regional patent offices. Applicants may wish to consider the filing of an international application under the Patent Cooperation Treaty (PCT). An international (PCT) application generally has the same effect as a regular national patent application in each PCT-member country. The PCT process **simplifies** the filing of patent applications on the same invention in member countries, but **does not result** in a grant of "an international patent" and does not eliminate the need of applicants to file additional documents and fees in countries where patent protection is desired.

Almost every country has its own patent law, and a person desiring a patent in a particular country must make an application for patent in that country in accordance with its particular laws. Since the laws of many countries differ in various respects from the patent law of the United States, applicants are advised to seek guidance from specific foreign countries to ensure that patent rights are not lost prematurely.

Applicants also are advised that in the case of inventions made in the United States, the Director of the USPTO must issue a license before applicants can apply for a patent in a foreign country. The filing of a U.S. patent application serves as a request for a foreign filing license. The application's filing receipt contains further information and guidance as to the status of applicant's license for foreign filing.

Applicants may wish to consult the USPTO booklet, "General Information Concerning Patents" (specifically, the section entitled "Treaties and Foreign Patents") for more information on timeframes and deadlines for filing foreign patent applications. The guide is available either by contacting the USPTO Contact Center at 800-786-9199, or it can be viewed on the USPTO website at http://www.uspto.gov/web/offices/pac/doc/general/index.html.

For information on preventing theft of your intellectual property (patents, trademarks and copyrights), you may wish to consult the U.S. Government website, http://www.stopfakes.gov. Part of a Department of Commerce initiative, this website includes self-help "toolkits" giving innovators guidance on how to protect intellectual property in specific countries such as China, Korea and Mexico. For questions regarding patent enforcement issues, applicants may call the U.S. Government hotline at 1-866-999-HALT (1-866-999-4158).

LICENSE FOR FOREIGN FILING UNDER

Title 35, United States Code, Section 184

Title 37, Code of Federal Regulations, 5.11 & 5.15

GRANTED

The applicant has been granted a license under 35 U.S.C. 184, if the phrase "IF REQUIRED, FOREIGN FILING LICENSE GRANTED" followed by a date appears on this form. Such licenses are issued in all applications where the conditions for issuance of a license have been met, regardless of whether or not a license may be required as

set forth in 37 CFR 5.15. The scope and limitations of this license are set forth in 37 CFR 5.15(a) unless an earlier license has been issued under 37 CFR 5.15(b). The license is subject to revocation upon written notification. The date indicated is the effective date of the license, unless an earlier license of similar scope has been granted under 37 CFR 5.13 or 5.14.

This license is to be retained by the licensee and may be used at any time on or after the effective date thereof unless it is revoked. This license is automatically transferred to any related applications(s) filed under 37 CFR 1.53(d). This license is not retroactive.

The grant of a license does not in any way lessen the responsibility of a licensee for the security of the subject matter as imposed by any Government contract or the provisions of existing laws relating to espionage and the national security or the export of technical data. Licensees should apprise themselves of current regulations especially with respect to certain countries, of other agencies, particularly the Office of Defense Trade Controls, Department of State (with respect to Arms, Munitions and Implements of War (22 CFR 121-128)); the Bureau of Industry and Security, Department of Commerce (15 CFR parts 730-774); the Office of Foreign AssetsControl, Department of Treasury (31 CFR Parts 500+) and the Department of Energy.

NOT GRANTED

No license under 35 U.S.C. 184 has been granted at this time, if the phrase "IF REQUIRED, FOREIGN FILING LICENSE GRANTED" DOES NOT appear on this form. Applicant may still petition for a license under 37 CFR 5.12, if a license is desired before the expiration of 6 months from the filing date of the application. If 6 months has lapsed from the filing date of this application and the licensee has not received any indication of a secrecy order under 35 U.S.C. 181, the licensee may foreign file the application pursuant to 37 CFR 5.15(b).

UNITED STATES PATENT AND TRADEMARK OFFICE

Commissioner for Patents
United States Patent and Trademark Office
P.O. Box 1450
Alexandria, VA 22313-1450
www.uspto.gov

OBLON, SPIVAK, MCCLELLAND
MAIER & NEUSTADT, L.L.P.
1940 DUKE STREET
ALEXANDRIA VA 22314

MAILED
AUG 24 2011
OFFICE OF PETITIONS

In re Patent No. 7,931,956 :
Issue Date: April 26, 2011 :
Application No. 12/473,355 : DECISION ON PETITION
Filed: May 28, 2009 :
Attorney Docket No. 342560US8X CONT :

This is a decision on the Petition For Certificate Of Correction Under 37 CFR §1.183, filed June 27, 2011, which is being treated as a Petition Under 37 CFR §3.81(b), to identify the correct order of the assignees' names. A completed Certificate of Correction Form was submitted with Petition.

The petition under 37 CFR §3.81(b) is **GRANTED**.

Petitioner urges that the present Petition was submitted to correct the order of the assignees' names on the previously submitted PTOL 85B and such error was inadvertent. Accordingly, petitioner requests, in effect, that the Title Page of the above-identified patent be corrected, via issuance of Certificate of Correction, to correct the order of the assignees' names identified thereon from:

"Sony Chemical & Information Device Corporation, Tokyo (JP)
Sony Corporation, Tokyo (JP) "

to:

--Sony Corporation, Tokyo (JP)
Sony Chemical & Information Device Corporation, Tokyo (JP) --

37 CFR 3.81(b), effective June 25, 2004, reads:

> *After payment of the issue fee:* Any request for issuance of an application in the name of the assignee submitted after the date of payment of the issue fee, and any request for a patent to be corrected to state the name of the assignee, must state that the assignment was submitted for recordation as set forth in §3.11 before issuance of the patent, and must include a request for a certificate of correction under §1.323 of this chapter (accompanied by the fee set forth in §1.20(a) and the processing fee set forth in §1.17(i) of this chapter

The requisite $100.00 fee (Fee Code 1811), as set forth under 37 CFR §1.20(a), and the requisite $130.00 processing fee (Fee Code 1464), as set forth under 37 CFR §1.17(i), have been submitted. Further, Office assignment records are consistent with the requested correction. Accordingly, since the Petition complies with the provisions of 37 CFR §3.81(b), it is appropriate for the Office to issue a Certificate of Correction in accordance with the content of the Form submitted with Petition.

Inquiries related this communication should be directed to the undersigned at (571)272-3213.

Any questions concerning the issuance of a Certificate of Correction should be directed to the Certificates of Correction Branch at (703)756-1814.

This matter is being referred to the Certificates of Correction Branch for processing of a Certificate of Correction in U.S. Patent No. 7,931,956.

Cheryl Gibson Baylor

Cheryl Gibson-Baylor
Petitions Examiner
Office of Petitions

UNITED STATES PATENT AND TRADEMARK OFFICE

Commissioner for Patents
United States Patent and Trademark Office
P.O. Box 1450
Alexandria, VA 22313-1450
www.uspto.gov

The Marbury Law Group, PLLC
11800 SUNRISE VALLEY DRIVE
SUITE 1000
RESTON VA 20191

MAILED
MAY 19 2011
OFFICE OF PETITIONS

In re Application of	:
KERNAHAN, Kent	:
Application No. 12/473,356	: DECISION ON PETITION
Filed: May 28, 2009	: UNDER 37 CFR 1.78(a)(3)
Docket No. 1589-009	:

This is a decision on the petition under 37 CFR 1.78(a)(3), filed April 25, 2011, to accept an unintentionally delayed claim under 35 U.S.C. § 120 for the benefit of priority to the prior-filed nonprovisional applications set forth in the substitute specification filed with the petition.

The petition is **DISMISSED**.

A petition for acceptance of a claim for late priority under 37 CFR 1.78(a)(3) is only applicable to those applications filed on or after November 29, 2000. Further, the petition is appropriate only after the expiration of the period specified in 37 CFR 1.78(a)(2)(ii). In addition, the petition under 37 CFR 1.78(a)(3) must be accompanied by:

(1) the reference required by 35 U.S.C. § 120 and 37 CFR 1.78(a)(2)(i) of the prior-filed application, unless previously submitted;
(2) the surcharge set forth in § 1.17(t); and
(3) a statement that the entire delay between the date the claim was due under 37 CFR 1.78(a)(2)(ii) and the date the claim was filed was unintentional. The Director may require additional information where there is a question whether the delay was unintentional.

The petition does not satisfy item (1) above.

The reference to add the above-noted, prior-filed applications in the first sentence of the specification on page one following the title is not acceptable as drafted since it improperly incorporates by reference the prior-filed applications. An incorporation by reference statement added after an application's filing date is not effective because no new matter can be added to an application after its filing date (*see* 35 U.S.C. § 132(a)). If an incorporation by reference

statement is included in an amendment to the specification to add a benefit claim under 35 U.S.C. § 120 after the filing date of the application, the amendment would not be proper. When a benefit claim under 35 U.S.C. § 120 is submitted after the filing of an application, the reference to the prior application cannot include an incorporation by reference statement of the prior application. *See* Dart Industries v. Banner, 636 F.2d 684, 207 USPQ 273 (C.A.D.C. 1980). *Note* MPEP §§ 201.06(c) and 608.04(b). The amendment as drafted is unacceptable and, therefore, is not considered a proper reference under 37 CFR 1.78(a)(2)(i).

Further, the amendment is physically part of the specification and, as such, does not comply with 37 CFR 1.121, 1.52, or 1.4(c). Note that 37 CFR 1.121 states that amendments are made by filing a paper, in compliance with § 1.52, directing that specified amendments be made. The pertinent section of 37 CFR 1.52 states that the claim (in this case, the claim for priority), must commence on a separate physical sheet. 37 CFR 1.4(c) states that each distinct subject must be contained in a separate paper since different matters may be considered by different branches of the United States Patent and Trademark Office. Before the petition can be granted, petitioner must submit a substitute amendment in compliance with the aforementioned rules, along with a renewed petition under 37 CFR 1.78(a)(3).[1]

It is not apparent whether the person signing the statement of unintentional delay was in a position to have firsthand or direct knowledge of the facts and circumstances of the delay at issue. Nevertheless, such statement is being treated as having been made as the result of a reasonable inquiry into the facts and circumstances of such delay. See 37 CFR 10.18(b) and Changes to Patent Practice and Procedure; Final Rule Notice, 62 Fed. Reg. 53131, 53178 (October 10, 1997), 1203 Off. Gaz. Pat. Office 63, 103 (October 21, 1997). In the event that such an inquiry has not been made, petitioner must make such an inquiry. If such inquiry results in the discovery that it is not correct that the entire delay in filing the required reply from the due date for the reply until the filing of a grantable petition pursuant to 37 CFR 1.78(a)(3) was unintentional, petitioner must notify the Office.

If reconsideration of this decision is desired, a renewed petition under 37 CFR § 1.78(a)(3) and an Application Data Sheet or an amendment (complying with the provisions of 37 CFR 1.121 and 37 CFR 1.76(b)(5)) to correct the above matters are required.

[1] The claim for priority may also be made in an Application Data Sheet in compliance with 37 CFR 1.121 and 37 CFR 1.76(b)(5).

Further correspondence with respect to this matter should be addressed as follows:

By mail: Mail Stop PETITIONS
Commissioner for Patents
Post Office Box 1450
Alexandria, VA 22313-1450

By hand: Customer Service Window
Mail Stop Petitions
Randolph Building
401 Dulany Street
Alexandria, VA 22314

By fax: (571) 273-8300
ATTN: Office of Petitions

Any questions concerning this matter may be directed to Jose' G Dees at (571) 272-1569.

David Bucci
Petitions Examiner
Office of Petitions

'UNITED STATES PATENT AND TRADEMARK OFFICE

Commissioner for Patents
United States Patent and Trademark Office
P.O. Box 1450
Alexandria, VA 22313-1450
www.uspto.gov

The Marbury Law Group, PLLC
11800 SUNRISE VALLEY DRIVE
SUITE 1000
RESTON VA 20191

MAILED
JUN 29 2011
OFFICE OF PETITIONS

In re Application of	:	
KERNAHAN, Kent	:	
Application No. 12/473,356	:	DECISION ON PETITION
Filed: May 28, 2009	:	UNDER 37 CFR 1.78(a)(3)
Attorney Docket No.: 1589-009	:	

This is a decision on the renewed petition under 37 CFR 1.78(a)(3), filed June 2, 2011 to accept an unintentionally delayed claim under 35 U.S.C. § 120 for the benefit of priority to the prior-filed nonprovisional applications set forth in the substitute specification filed with the petition.

The petitions are **GRANTED**.

A petition for acceptance of a claim for late priority under 37 CFR 1.78(a)(3) is only applicable to those applications filed on or after November 29, 2000. Further, the petition is appropriate only after the expiration of the period specified in 37 CFR 1.78(a)(2)(ii). In addition, the petition under 37 CFR 1.78(a)(3) must be accompanied by:

(1) the reference required by 35 U.S.C. § 120 and 37 CFR 1.78(a)(2)(i) of the prior-filed application, unless previously submitted;
(2) the surcharge set forth in § 1.17(t); and
(3) a statement that the entire delay between the date the claim was due under 37 CFR 1.78(a)(2)(ii) and the date the claim was filed was unintentional. The Director may require additional information where there is a question whether the delay was unintentional.

All of the above requirements having been satisfied, the late claim for priority under 35 U.S.C. § 120 is accepted as being unintentionally delayed.

The granting of the petition to accept the delayed benefit claim to the prior-filed applications under 37 CFR 1.78(a)(3) should not be construed as meaning that this application is entitled

to the benefit of the prior-filed applications. In order for this application to be entitled to the benefit of the prior-filed applications, all other requirements under 35 U.S.C. § 120 and 37 CFR 1.78(a)(1) and (a)(2) must be met. Similarly, the fact that the corrected Filing Receipt accompanying this decision on petition includes the prior-filed applications should not be construed as meaning that applicant is entitled to the claim for benefit of priority to the prior-filed applications noted thereon.

A corrected Filing Receipt, which includes the priority claim to the prior-filed nonprovisional applications, accompanies this decision on petition.

Any inquiries concerning this decision may be directed to Jose' G Dees at (571) 272-1569. All other inquiries concerning either the examination procedures or status of the application should be directed to the Technology Center.

This application is being forwarded to Technology Center Art Unit 2121 for consideration by the examiner of applicant's entitlement to claim benefit of priority under 35 U.S.C. § 120 to the prior-filed applications.

David Bucci
Petitions Examiner
Office of Petitions

ATTACHMENT: Corrected Filing Receipt

UNITED STATES PATENT AND TRADEMARK OFFICE

UNITED STATES DEPARTMENT OF COMMERCE
United States Patent and Trademark Office
Address: COMMISSIONER FOR PATENTS
P.O. Box 1450
Alexandria, Virginia 22313-1450
www.uspto.gov

APPLICATION NUMBER	FILING or 371(c) DATE	GRP ART UNIT	FIL FEE REC'D	ATTY.DOCKET.NO	TOT CLAIMS	IND CLAIMS
12/473,356	05/28/2009	2121	527	1589-009	3	1

CONFIRMATION NO. 9441

CORRECTED FILING RECEIPT

22208
The Marbury Law Group, PLLC
11800 SUNRISE VALLEY DRIVE
SUITE 1000
RESTON, VA 20191

OC000000048477659

Date Mailed: 06/29/2011

Receipt is acknowledged of this non-provisional patent application. The application will be taken up for examination in due course. Applicant will be notified as to the results of the examination. Any correspondence concerning the application must include the following identification information: the U.S. APPLICATION NUMBER, FILING DATE, NAME OF APPLICANT, and TITLE OF INVENTION. Fees transmitted by check or draft are subject to collection. Please verify the accuracy of the data presented on this receipt. **If an error is noted on this Filing Receipt, please submit a written request for a Filing Receipt Correction. Please provide a copy of this Filing Receipt with the changes noted thereon. If you received a "Notice to File Missing Parts" for this application, please submit any corrections to this Filing Receipt with your reply to the Notice. When the USPTO processes the reply to the Notice, the USPTO will generate another Filing Receipt incorporating the requested corrections**

Applicant(s)
KENT KERNAHAN, CUPERTINO, CA;

Assignment For Published Patent Application
ARRAY CONVERTER, INC., SUNNYVALE, CA

Power of Attorney: The patent practitioners associated with Customer Number 22208

Domestic Priority data as claimed by applicant
This application is a CIP of 12/276,411 11/23/2008 PAT 7,929,324
which is a CIP of 12/061,025 04/02/2008 PAT 7,719,864

Foreign Applications (You may be eligible to benefit from the **Patent Prosecution Highway** program at the USPTO. Please see http://www.uspto.gov for more information.)

If Required, Foreign Filing License Granted: 06/04/2009

The country code and number of your priority application, to be used for filing abroad under the Paris Convention, is **US 12/473,356**

Projected Publication Date: Not Applicable

Non-Publication Request: No

Early Publication Request: No
**** SMALL ENTITY ****

Title

METHOD FOR CONTROLLING ELECTRICAL POWER

Preliminary Class

700

PROTECTING YOUR INVENTION OUTSIDE THE UNITED STATES

Since the rights granted by a U.S. patent extend only throughout the territory of the United States and have no effect in a foreign country, an inventor who wishes patent protection in another country must apply for a patent in a specific country or in regional patent offices. Applicants may wish to consider the filing of an international application under the Patent Cooperation Treaty (PCT). An international (PCT) application generally has the same effect as a regular national patent application in each PCT-member country. The PCT process **simplifies** the filing of patent applications on the same invention in member countries, but **does not result** in a grant of "an international patent" and does not eliminate the need of applicants to file additional documents and fees in countries where patent protection is desired.

Almost every country has its own patent law, and a person desiring a patent in a particular country must make an application for patent in that country in accordance with its particular laws. Since the laws of many countries differ in various respects from the patent law of the United States, applicants are advised to seek guidance from specific foreign countries to ensure that patent rights are not lost prematurely.

Applicants also are advised that in the case of inventions made in the United States, the Director of the USPTO must issue a license before applicants can apply for a patent in a foreign country. The filing of a U.S. patent application serves as a request for a foreign filing license. The application's filing receipt contains further information and guidance as to the status of applicant's license for foreign filing.

Applicants may wish to consult the USPTO booklet, "General Information Concerning Patents" (specifically, the section entitled "Treaties and Foreign Patents") for more information on timeframes and deadlines for filing foreign patent applications. The guide is available either by contacting the USPTO Contact Center at 800-786-9199, or it can be viewed on the USPTO website at http://www.uspto.gov/web/offices/pac/doc/general/index.html.

For information on preventing theft of your intellectual property (patents, trademarks and copyrights), you may wish to consult the U.S. Government website, http://www.stopfakes.gov. Part of a Department of Commerce initiative, this website includes self-help "toolkits" giving innovators guidance on how to protect intellectual property in specific countries such as China, Korea and Mexico. For questions regarding patent enforcement issues, applicants may call the U.S. Government hotline at 1-866-999-HALT (1-866-999-4158).

LICENSE FOR FOREIGN FILING UNDER

Title 35, United States Code, Section 184

Title 37, Code of Federal Regulations, 5.11 & 5.15

GRANTED

The applicant has been granted a license under 35 U.S.C. 184, if the phrase "IF REQUIRED, FOREIGN FILING LICENSE GRANTED" followed by a date appears on this form. Such licenses are issued in all applications where the conditions for issuance of a license have been met, regardless of whether or not a license may be required as

set forth in 37 CFR 5.15. The scope and limitations of this license are set forth in 37 CFR 5.15(a) unless an earlier license has been issued under 37 CFR 5.15(b). The license is subject to revocation upon written notification. The date indicated is the effective date of the license, unless an earlier license of similar scope has been granted under 37 CFR 5.13 or 5.14.

This license is to be retained by the licensee and may be used at any time on or after the effective date thereof unless it is revoked. This license is automatically transferred to any related applications(s) filed under 37 CFR 1.53(d). This license is not retroactive.

The grant of a license does not in any way lessen the responsibility of a licensee for the security of the subject matter as imposed by any Government contract or the provisions of existing laws relating to espionage and the national security or the export of technical data. Licensees should apprise themselves of current regulations especially with respect to certain countries, of other agencies, particularly the Office of Defense Trade Controls, Department of State (with respect to Arms, Munitions and Implements of War (22 CFR 121-128)); the Bureau of Industry and Security, Department of Commerce (15 CFR parts 730-774); the Office of Foreign AssetsControl, Department of Treasury (31 CFR Parts 500+) and the Department of Energy.

NOT GRANTED

No license under 35 U.S.C. 184 has been granted at this time, if the phrase "IF REQUIRED, FOREIGN FILING LICENSE GRANTED" DOES NOT appear on this form. Applicant may still petition for a license under 37 CFR 5.12, if a license is desired before the expiration of 6 months from the filing date of the application. If 6 months has lapsed from the filing date of this application and the licensee has not received any indication of a secrecy order under 35 U.S.C. 181, the licensee may foreign file the application pursuant to 37 CFR 5.15(b).

UNITED STATES PATENT AND TRADEMARK OFFICE

Commissioner for Patents
United States Patent and Trademark Office
P.O. Box 1450
Alexandria, VA 22313-1450
www.uspto.gov

COVINGTON & BURLING, LLP
ATTN: PATENT DOCKETING
1201 PENNSYLVANIA AVENUE, N.W.
WASHINGTON, DC 20004-2401

MAILED
FEB 07 2012
OFFICE OF PETITIONS

In re Application of	:	
John Horton	:	
Application No.: 12/473,394	:	ON PETITION
Filed: May 28, 2009	:	
Attorney Docket No.: 038184.0029-US02	:	

This is a decision on the petition, filed February 7, 2012, under 37 CFR 1.313(c)(2) to withdraw the above-identified application from issue after payment of the issue fee.

The petition is **GRANTED**.

The above-identified application is withdrawn from issue for consideration of a submission under 37 CFR 1.114 (request for continued examination). See 37 CFR 1.313(c)(2).

Petitioner is advised that the issue fee paid on January 11, 2012, cannot be refunded. If, however, this application is again allowed, petitioner may request that it be applied towards the issue fee required by the new Notice of Allowance.[1]

Telephone inquiries relating to this decision should be directed to the undersigned at (571) 272-3204.

The application is being referred to Technology Center AU 1788 for further processing of the request for continued examination and for consideration of the concurrently filed Information Disclosure Statement (IDS).

/SDB/

Sherry D. Brinkley
Petitions Examiner
Office of Petitions

[1] *The request to apply the issue fee to the new Notice may be satisfied by completing and returning the new Part B – Fee(s) Transmittal Form (along with any balance due at the time of submission). Petitioner is advised that the Issue Fee Transmittal Form* ***must*** *be completed and timely submitted to avoid abandonment of the application.*

UNITED STATES PATENT AND TRADEMARK OFFICE

Commissioner for Patents
United States Patent and Trademark Office
P.O. Box 1450
Alexandria, VA 22313-1450
www.uspto.gov

SCHWEGMAN, LUNDBERG & WOESSNER/Intel
PO BOX 2938
MINNEAPOLIS MN 55402

MAILED
FEB 06 2012
OFFICE OF PETITIONS

In re Application of	:
Stephens	: DECISION ON PETITION
Application No. 12/473,424	:
Filed: May 28, 2009	:
Atty. Dkt. No.: 884.B49US2	:

This decision is in response to the petition under 37 CFR 1.137(b), filed January 20, 2012.

The petition is **GRANTED**.

This application became abandoned July 16, 2011 for failure to timely submit a proper reply in response to the non-final Office action mailed April 15, 2011. The non-final Office action set a three month shortened statutory period of time for reply. Notice of Abandonment was mailed November 22, 2011.

A grantable petition pursuant to 37 C.F.R. § 1.137(b) must be accompanied by: (1) the required reply to the outstanding Office action or notice, unless previously filed; (2) the petition fee as set forth in 37 C.F.R. § 1.17(m); (3) a statement that the entire delay in filing the required reply from the due date for the reply until the filing of a grantable petition pursuant to 37 C.F.R. § 1.137(b) was unintentional; and (4) any terminal disclaimer (and fee set forth in 37 C.F.R. § 1.20(d)) required pursuant to 37 C.F.R. § 1.137(c).

The above-identified application has been carefully reviewed and found in compliance with the requirements set forth above.

The instant petition has been carefully reviewed and found in compliance with the requirements set forth above.

This application is being forwarded to Group Art Unit 2472 for further processing.

Telephone inquiries concerning this decision should be directed to the undersigned at (571) 272-3205.

/ALESIA M. BROWN/

Alesia M. Brown
Attorney Advisor
Office of Petitions

UNITED STATES PATENT AND TRADEMARK OFFICE

UNITED STATES DEPARTMENT OF COMMERCE
United States Patent and Trademark Office
Address: COMMISSIONER FOR PATENTS
P.O. Box 1450
Alexandria, Virginia 22313-1450
www.uspto.gov

APPLICATION NO.	FILING DATE	FIRST NAMED INVENTOR	ATTORNEY DOCKET NO.	CONFIRMATION NO.
12/473,470	05/28/2009	Makoto WATANABE	09324/LH	9667

1933 7590 07/12/2011
HOLTZ, HOLTZ, GOODMAN & CHICK PC
220 Fifth Avenue
16TH Floor
NEW YORK, NY 10001-7708

EXAMINER
HOGUE, DENNIS A

ART UNIT	PAPER NUMBER
2622	

MAIL DATE	DELIVERY MODE
07/12/2011	PAPER

Please find below and/or attached an Office communication concerning this application or proceeding.

The time period for reply, if any, is set in the attached communication.

UNITED STATES PATENT AND TRADEMARK OFFICE

Commissioner for Patents
United States Patent and Trademark Office
P.O. Box 1450
Alexandria, VA 22313-1450
www.uspto.gov

HOLTZ, HOLTZ, GOODMAN & CHICK PC
220 Fifth Avenue
16TH Floor
NEW YORK NY 10001-7708

In re Application of	
WATANABE et al.	**: DECISION ON REQUEST TO**
Application No.: 12/473,470	**: PARTICIPATE IN THE PATENT**
Filed: 28 May 2009	**: PROSECUTION HIGHWAY**
Attorney Docket No.: 09324/LH	**: PROGRAM AND PETITION**
For: PHOTOGRAPHIC APPARATUS,	**: TO MAKE SPECIAL UNDER**
SETTING METHOD OF	**: 37 CFR 1.102(a)**
PHOTOGRAPHY CONDITIONS, AND	
RECORDING MEDIUM	

This is a decision on the request to participate in the Patent Prosecution Highway (PPH) program and the petition under 37 CFR 1.102(a), filed on 07 June 2011, to make the above-identified application special.

The request and petition are **GRANTED**.

Discussion

A grantable request to participate in the PPH pilot program and petition to make special require:

1. The U.S. application is

    a. a Paris Convention application which either
        i. validly claims priority under 35 U.S.C. 119(a) and 37 CFR 1.55 to one or more applications filed in the JPO, or
        ii. validly claims priority to a PCT application that contains no priority claims, or
    b. a national stage application under the PCT (an application which entered the national stage in the U.S. from a PCT international application after compliance with 35 U.S.C. 371), which PCT application
        i. validly claims priority to an application filed in the JPO, or
        ii. validly claims priority to a PCT application that contains no priority claims, or
        iii. contains no priority claim, or
    c. a so-called bypass application filed under 35 U.S.C. 111(a) which validly claims benefit under 35 U.S.C. 120 to a PCT application, which PCT application

i. validly claims priority to an application filed in the JPO, or
ii. validly claims priority to a PCT application that contains no priority claims, or
iii. contains no priority claim;

2. Applicant must submit a copy of:
   a. The allowable/patentable claim(s) from the JPO application(s);
   b. An English translation of the allowable/patentable claim(s) and
   c. A statement that the English translation is accurate;
3. Applicant must:
   a. Ensure all the claims in the U.S. application must sufficiently correspond or be amended to sufficiently correspond to the allowable/patentable claim(s) in the JPO application(s) and
   b. Submit a claims correspondence table in English;
4. Examination of the U.S. application has <u>not</u> begun;
5. Applicant must submit:
   a. Documentation of prior office action:
      i. a copy of the office action(s) just prior to the "Decision to Grant a Patent" from each of the JPO application(s) containing the allowable/patentable claim(s) or
      ii. if the allowable/patentable claims(s) are from a "Notification of Reasons for Refusal" then the Notification of Reasons for Refusal or
      iii. if the JPO application is a first action allowance then no office action from the JPO is necessary should be indicated on the request/petition form;
   b. An English language translation of the JPO Office action from (5)(a)(i)-(ii) above
   c. A statement that the English translation is accurate;
6. Applicant must submit:
   a. An IDS listing the documents cited by the JPO examiner in the JPO office action (unless already submitted in this application)
   b. Copies of the documents except U.S. patents or U.S. patent application publications (unless already submitted in this application);

The request to participate in the PPH pilot program and petition comply with the above requirements. Accordingly, the above-identified application has been accorded "special" status.

Inquiries concerning this decision should be directed to Lee W. Young at 571-272-4549.

All other inquiries concerning the examination or status of the application is accessible in the PAIR system at http://www.uspto.gov/ebc.index.html.

This application will be forwarded to the examiner for action on the merits commensurate with this decision once this application's formality reviews have been completed.

Lee W. Young
TQAS, Technology Center 2600

UNITED STATES PATENT AND TRADEMARK OFFICE

Commissioner for Patents
United States Patent and Trademark Office
P.O. Box 1450
Alexandria, VA 22313-1450
www.uspto.gov

Paper No.

MARSH, FISCHMANN & BREYFOGLE LLP
8055 East Tufts Avenue
Suite 450
Denver CO 80237

MAILED
NOV 04 2011
OFFICE OF PETITIONS

In re Application of :
Silva :
Application No. 12/473,497 : DECISION ON PETITION
Filed: May 28, 2009 : PURSUANT TO
Attorney Docket No. 50224- : 37 C.F.R. § 1.137(B)
00454 :
Title: OPTIMIZED LITZ WIRE :

This is a decision on the petition pursuant to 37 C.F.R. § 1.137(b), filed October 6, 2011, to revive the above-identified application.

This petition pursuant to 37 C.F.R. § 1.137(b) is **GRANTED.**

The above-identified application became abandoned for failure to reply in a timely manner to a non-final Office action, mailed December 27, 2010, which set a shortened statutory period for reply of three months. No response was received, and no extensions of time under the provisions of 37 C.F.R. § 1.136(a) were requested. Accordingly, the above-identified application became abandoned on March 28, 2011. A notice of abandonment was mailed on August 5, 2011.

A grantable petition pursuant to 37 C.F.R. § 1.137(b) must be accompanied by:

(1) The reply required to the outstanding Office action or notice, unless previously filed;
(2) The petition fee as set forth in 37 C.F.R. § 1.17(m);
(3) A statement that the entire delay in filing the required reply from the due date for the reply until the filing of a grantable petition

pursuant to this paragraph was unintentional. The Commissioner may require additional information where there is a question whether the delay was unintentional, and;

(4) Any terminal disclaimer (and fee as set forth in 37 C.F.R. § 1.20(d)) required pursuant to paragraph (d) of this section.

With this petition, Petitioner has submitted an amendment, the petition fee, and the proper statement of unintentional delay. As such, the first three requirements of Rule 1.137(b) have been met. The fourth requirement of Rule 1.137(b) is not applicable, as a terminal disclaimer is not required.[1]

The Technology Center will be notified of this decision, and jurisdiction over this application is transferred to the Technology Center, so that the application may receive further processing. The Technology Center's support staff will notify the Examiner of this decision, so that the amendment that was received on October 6, 2011 can be processed in due course.

Petitioner may find it beneficial to view Private PAIR within a fortnight of the present decision to ensure that the revival has been acknowledged by the Technology Center in response to this decision. It is noted that all inquiries with regard to any failure of that change in status should be directed to the Technology Center where that change of status must be effected - **the Office of Petitions cannot effectuate a change of status.**

Telephone inquiries regarding *this decision* should be directed to the undersigned at (571) 272-3225.[2] All other inquiries concerning this application should be directed to the Technology Center.

Paul Shanoski
Senior Attorney
Office of Petitions

1 See Rule 1.137(d).
2 Petitioner will note that all practice before the Office should be in writing, and the action of the Office will be based exclusively on the written record in the Office. See 37 C.F.R. § 1.2. As such, Petitioner is reminded that no telephone discussion may be controlling or considered authority for Petitioner's further action(s).

UNITED STATES PATENT AND TRADEMARK OFFICE

Commissioner for Patents
United States Patent and Trademark Office
P.O. Box 1450
Alexandria, VA 22313-1450
www.uspto.gov

MAIL

JUL 05 2011

DIRECTOR'S OFFICE
TECHNOLOGY CENTER 2600

HOLTZ, HOLTZ, GOODMAN & CHICK PC
220 Fifth Avenue
16TH Floor
NEW YORK NY 10001-7708

In re Application of	:	
WATANABE, MAKOTO, et al.	:	DECISION ON REQUEST TO
Application No. 12/473,511	:	PARTICIPATE IN PATENT
Filed: May 28, 2009	:	PROSECUTION HIGHWAY
Attorney Docket No. **09315/LH**	:	PROGRAM AND PETITION
	:	TO MAKE SPECIAL UNDER
	:	37 CFR 1.102(a)

This is a decision on the request to participate in the Patent Prosecution Highway (PPH) program and the petition under 37 CFR 1.102(a), filed June 8, 2011 to make the above-identified application special.

The request and petition are **GRANTED.**

A grantable request to participate in the PPH program and petition to make special require:

(1) The U.S. application must validly claim priority under 35 U.S.C. 119(a) to one or more applications filed in the JPO;
(2) Applicant must submit a copy of the allowable/patentable claim(s) from the JPO application(s) along with an English translation thereof and a statement that the English translation is accurate;
(3) All the claims in the U.S. application must sufficiently correspond or be amended to sufficiently correspond to the allowable/patentable claim(s) in the JPO application(s);
(4) Examination of the U.S. application has not begun;
(5) Applicant must submit a copy of all the office actions from each of the JPO application(s) containing the allowable/patentable claim(s) along with an English translation thereof and a statement that the English translation is accurate; and
(6) Applicant must submit an IDS listing the documents cited by the JPO examiner in the JPO office action along with copies of documents except U.S. patents or U.S. patent application publications.

The request to participate in the PPH program and petition comply with the above requirements. Accordingly, the above-identified application has been accorded "special" status.

Telephone inquiries concerning this decision should be directed to Kenneth Wieder at 571-272-2986.

All other inquiries concerning the examination or status of the application should be directed to Patent Application Information Retrieval (PAIR) system.

The application is being forwarded to the examiner for action on the merits commensurate with this decision.

/Kenneth A. Wieder/

Kenneth Wieder
Quality Assurance Specialist
Technology Center 2600
Communications

Doc Code: PET.AUTO Document Description: Petition automatically granted by EFS-Web	PTO/SB/140 U.S. Patent and Trademark Office Department of Commerce

Electronic Petition Request	**PETITION TO WITHDRAW AN APPLICATION FROM ISSUE AFTER PAYMENT OF THE ISSUE FEE UNDER 37 CFR 1.313(c)**
Application Number	12473682
Filing Date	28-May-2009
First Named Inventor	Hideaki Shoji
Art Unit	2821
Examiner Name	HUEDUNG MANCUSO
Attorney Docket Number	342539US8X
Title	MULTIBAND ANTENNA AND RADIO COMMUNICATION TERMINAL

An application may be withdrawn from issue for further action upon petition by the applicant. To request that the Office withdraw an application from issue, applicant must file a petition under this section including the fee set forth in § 1.17(h) and a showing of good and sufficient reasons why withdrawal of the application from issue is necessary.

APPLICANT HEREBY PETITIONS TO WITHDRAW THIS APPLICATION FROM ISSUE UNDER 37 CFR 1.313(c).

A grantable petition requires the following items:
(1) Petition fee; and
(2) One of the following reasons:
(a) Unpatentability of one or more claims, which must be accompanied by an unequivocal statement that one or more claims are unpatentable, an amendment to such claim or claims, and an explanation as to how the amendment causes such claim or claims to be patentable;
(b) Consideration of a request for continued examination in compliance with § 1.114 (for a utility or plant application only); or
(c) Express abandonment of the application. Such express abandonment may be in favor of a continuing application, but not a CPA under 37 CFR 1.53(d).

Petition Fee

☐ Applicant claims SMALL ENTITY status. See 37 CFR 1.27.

☐ Applicant is no longer claiming SMALL ENTITY status. See 37 CFR 1.27(g)(2).

☐ Applicant(s) status remains as SMALL ENTITY.

☒ Applicant(s) status remains as other than SMALL ENTITY

Reason for withdrawal from issue

○ One or more claims are unpatentable

◉ Consideration of a request for continued examination (RCE) (List of Required Documents and Fees)

○ Applicant hereby expressly abandons the instant application (any attorney/agent signing for this reason must have power of attorney pursuant to 37 CFR 1.32(b)).

RCE request,submission, and fee.

☐ I certify, in accordance with 37 CFR 1.4(d)(4) that : The RCE request ,submission, and fee have already been filed in the above-identified application on

☒ Are attached.

THIS PORTION MUST BE COMPLETED BY THE SIGNATORY OR SIGNATORIES

I certify, in accordance with 37 CFR 1.4(d)(4) that I am:

◉ An attorney or agent registered to practice before the Patent and Trademark Office who has been given power of attorney in this application.

○ An attorney or agent registered to practice before the Patent and Trademark Office, acting in a representative capacity.

○ A sole inventor

○ A joint inventor; I certify that I am authorized to sign this submission on behalf of all of the inventors

○ A joint inventor; all of whom are signing this e-petition

○ The assignee of record of the entire interest that has properly made itself of record pursuant to 37 CFR 3.71

Signature	/Andrew Harry/
Name	Andrew T. Harry
Registration Number	56959

UNITED STATES PATENT AND TRADEMARK OFFICE

Commissioner for Patents
United States Patent and Trademark Office
P.O. Box 1450
Alexandria, VA 22313-1450
www.uspto.gov

Decision Date : February 28, 2012

In re Application of :

Hideaki Shoji

DECISION ON PETITION

UNDER CFR 1.313(c)(2)

Application No : 12473682

Filed : 28-May-2009

Attorney Docket No : 342539US8X

This is an electronic decision on the petition under 37 CFR 1.313(c)(2), filed February 28, 2012 , to withdraw the above-identified application from issue after payment of the issue fee.

The petition is **GRANTED.**

The above-identified application is withdrawn from issue for consideration of a submission under 37 CFR 1.114 (request for continued examination). See 37 CFR 1.313(c)(2).

Petitioner is advised that the issue fee paid in this application cannot be refunded. If, however, this application is again allowed, petitioner may request that it be applied towards the issue fee required by the new Notice of Allowance.

Telephone inquiries concerning this decision should be directed to the Patent Electronic Business Center (EBC) at 866-217-9197.

This application file is being referred to Technology Center AU 2821 for processing of the request for continuing examination under 37 CFR 1.114 .

Office of Petitions

PTO/SB/20PCT-KR (06-10)
Approved for use through 01/31/2012. OMB 0651-0058
U.S. Patent and Trademark Office; U. S. DEPARTMENT OF COMMERCE
Under the Paperwork Reduction Act of 1995, no persons are required to respond to a collection of information unless it displays a valid OMB control number.

REQUEST FOR PARTICIPATION IN THE PATENT COOPERATION TREATY - PATENT PROSECUTION HIGHWAY (PCT-PPH) PILOT PROGRAM BETWEEN THE KOREAN INTELLECTUAL PROPERTY OFFICE (KIPO) AND THE USPTO

Application No:	12/473,708	Filing date:	05-28-2009
First Named Inventor:	Patrick Faith		
Title of the Invention:	Gateway Service Platform		

THIS REQUEST FOR PARTICIPATION IN THE PCT-PPH PILOT PROGRAM ALONG WITH THE REQUIRED DOCUMENTS MUST BE SUBMITTED VIA EFS-WEB. INFORMATION REGARDING EFS-WEB IS AVAILABLE AT HTTP://WWW.USPTO.GOV/EBC/EFS_HELP.HTML

APPLICANT HEREBY REQUESTS PARTICIPATION IN THE PCT-PPH PROGRAM AND PETITIONS TO MAKE THE ABOVE-IDENTIFIED APPLICATION SPECIAL UNDER THE PCT-PPH PROGRAM.

The above-identified application is (1) a national stage entry of the corresponding PCT application, or (2) a national stage entry of another PCT application which claims priority to the corresponding PCT application, or (3) a national application that claims domestic/ foreign priority to the corresponding PCT application, or (4) a national application which forms the basis for the priority claim in the corresponding PCT application, or (5) a continuing application of a U.S. application that satisfies one of (1) to (4) above, or (6) a U.S. application that claims domestic benefit to a U.S. provisional application which forms the basis for the priority claim in the corresponding PCT application.

The corresponding PCT application number(s) is/are: PCT/US2009/045493

The international filing date of the corresponding PCT application(s) is/are: 05-28-2009

I. List of Required Documents:

a. **A copy of the latest international work product (WO/ISA, WO/IPEA, or IPER) in the above–identified corresponding PCT application(s)**

☑ Is attached.

☐ Is not attached because the document is already in the U.S. application.

b. **A copy of all claims which were indicated as having novelty, inventive step and industrial applicability in the above-identified corresponding PCT application(s).**

☑ Is attached.

☐ Is not attached because the document is already in the U.S. application.

c. **English translations of the documents in a. and b. above are attached (if the documents are not in the English language). A statement that the English translation is accurate is attached for the document in b. above.**

This collection of information is required by 35 U.S.C. 119, 37 CFR 1.55, and 37 CFR 1.102(d). The information is required to obtain or retain a benefit by the public, which is to file (and by the USPTO to process) an application. Confidentiality is governed by 35 U.S.C. 122 and 37 CFR 1.11 and 1.14. This collection is estimated to take 2 hours to complete, including gathering, preparing, and submitting the completed application form to the USPTO. Time will vary depending upon the individual case. Any comments on the amount of time you require to complete this form and/or suggestions for reducing this burden should be sent to the Chief Information Officer, U.S. Patent and Trademark Office, U.S. Department of Commerce, P.O. Box 1450, Alexandria, VA 22313-1450. DO NOT SEND FEES OR COMPLETED FORMS TO THIS ADDRESS.

Approved for use through 01/31/2012. OMB 0651-0058
U.S.Patent and Trademark Office; U.S. DEPARTMENT OF COMMERCE

Under the Paperwork Reduction Act of 1995, no persons are required to respond to a collection of information unless it displays a valid OMB control number.

REQUEST FOR PARTICIPATION IN THE PCT-PPH PILOT PROGRAM BETWEEN THE KIPO AND THE USPTO

(continued)

Application No.:	12/473,703
First Named Inventor:	Patrick Faith

d. **(1) An information disclosure statement listing the documents cited in the international work products (ISR, WO/ISA, WO/IPEA, IPER) of the corresponding PCT application.**

☐ Is attached

☑ Has already been filed in the above-identified U.S. application on 3-16-2010

(2) Copies of all documents (except) for U.S. patents or U.S. patent application publications)

☑ Are attached.

☐ Have already been filed in the above-identified U.S. application on _____

II. Claims Correspondence Table:

Claims in US Application	Patentable Claims in the corresponding PCT Application	Explanation regarding the correspondence
1-21	1-21	Exact Correspondence

III. All the claims in the US application sufficiently correspond to the patentable claims in the corresponding PCT application.

Signature	Date 3/18/11
Name (Print/Typed) Patrick R. Jewik	Registration Number 40,456

UNITED STATES PATENT AND TRADEMARK OFFICE

UNITED STATES DEPARTMENT OF COMMERCE
United States Patent and Trademark Office
Address: COMMISSIONER FOR PATENTS
P.O. Box 1450
Alexandria, Virginia 22313-1450
www.uspto.gov

APPLICATION NO.	FILING DATE	FIRST NAMED INVENTOR	ATTORNEY DOCKET NO.	CONFIRMATION NO.
12/473,708	05/28/2009	Patrick Faith	16222U-039710US	1113

66945 7590 03/29/2011
KILPATRICK TOWNSEND & STOCKTON LLP/VISA
TWO EMBARCADERO CENTER, 8TH FLOOR
SAN FRANCISCO, CA 94111

EXAMINER
GOLABBAKHSH, EBRAHIM

ART UNIT	PAPER NUMBER
2452	

MAIL DATE	DELIVERY MODE
03/29/2011	PAPER

Please find below and/or attached an Office communication concerning this application or proceeding.

The time period for reply, if any, is set in the attached communication.

UNITED STATES PATENT AND TRADEMARK OFFICE

Commissioner for Patents
United States Patent and Trademark Office
P.O. Box 1450
Alexandria, VA 22313-1450
www.uspto.gov

KILPATRICK TOWNSEND &
STOCKTON LLP/VISA
TWO EMBARCADERO CENTER,
8TH FLOOR
SAN FRANCISCO CA 94111

In re Application of: Faith et al.
Application No. 12/473,708
Filed: May 28, 2009
For: **GATEWAY SERVICE PLATFORM**

DECISION ON REQUEST TO PARTICIPATE IN PATENT PROSECUTION HIGHWAY PROGRAM AND PETITION TO MAKE SPECIAL UNDER 37 CFR 1.102(d)

MAILED

MAR 2 3 2011

DIRECTOR OFFICE
TECHNOLOGY CENTER 2400

This is a decision on the request to participate in the PCT- Patent Prosecution Highway (PPH) pilot program and the petition under 37 CFR 1.102(d), filed February 18, 2011, to make the above-identified application special.

The petition is **GRANTED**.

A grantable request to participate in the PCT PPH program and petition to make special require:

(1) The relationship between the corresponding U.S. application for which participation in the PCT-PPH pilot program is requested and the PCT application satisfies one of the following:

(a) The U.S. application is a national stage entry of the corresponding PCT application.

(b)The U.S. application is a national application which forms the basis for the priority claim in the corresponding PCT application.

(c) The U.S. application is a national stage entry of another PCT application (which can be filed in any competent receiving office) which claims priority to the corresponding PCT application.

(d) The U.S. application is a national application claiming foreign/domestic priority to the corresponding PCT application.

(e) The U.S. application is a continuing application (continuation, divisional, or continuation-in-part) of the U.S. application which satisfies one of the above (a) to (d) scenarios.

(2) The latest work product in the international phase of the PCT application corresponding to the U.S. application indicates at least one claim in the PCT application has novelty, inventive step and industrial applicability. In case any observation is described in Box VIII of the WO/ISA, or WO/IPEA, or IPER which forms the basis for the PCT-PPH request, applicant must identify and explain why the claim(s) is/are not subject to any observation described in Box VIII irrespective of whether an amendment is submitted to correct the observation described in Box VIII.

(3) All the claims in each U.S. application for which a request for participation in the PCT-PPH pilot program is made must sufficiently correspond to or be mended to sufficiently correspond to one or more of those claims indicated as having novelty, inventive step and industrial applicability and free of any observation described in Box VIII in the latest work product of the corresponding PCT application.

(4) Substantive examination of the U.S. application for which participation in the PCT-PPH pilot program is requested has not begun.

(5) Applicant must submit a copy of the latest international work product which indicated that the claim(s) has/have novelty, inventive step and industrial applicability along with an English translation thereof if the copy of the latest international work product is not in the English language.

(6) Applicant must submit a copy of the claims from the corresponding PCT application which were indicated as having novelty, inventive step and industrial applicability in the latest work product of the PCT application along with an English translation thereof and a statement that the English translation is accurate if the claims are not in the English language. Applicant is required to submit a claims correspondence table in English. The claims correspondence table must indicate how all the claims in the U.S. application sufficiently correspond to the claims indicated as having novelty, inventive step and industrial applicability in the latest international work product. If the claims in the U.S. application for which participation in the PCT-PPH pilot program is requested are identical to the claims from the corresponding PCT application, and are in the English language, applicant may just indicate such in the PCT-PPH request and it will not be necessary for applicant to submit a copy of the claims from the corresponding PCT application.

(7) Applicant must submit an information disclosure statement (IDS) listing the documents cited in the international work products (ISR, WOIISA, WOIIPEA, PER) of the PCT.

(8) Applicant must submit a petition fee under 37 CFR 1.17(h) for the petition to make special under 37 CFR 1.102(d). As of May 25, 2010, the USPTO has <u>eliminated the fee</u> for the petition to make special under the PPH programs.

(9) The request for participation in the PCT-PPH pilot program and all the supporting documents must be submitted to the USPTO via EFS-Web and indexed with the following document description: "Petition to make special under PCT-Patent Pros Hwy. Any preliminary amendments and IDS submitted with the PCT-PPH documents must be separately indexed as a preliminary amendment and IDS, respectively.

The request to participate in the PCT-PPH program and petition are found to comply with all the above requirements. Accordingly, the above-identified application has been accorded "special" status.

Telephone inquiries concerning this decision should be directed to Christopher Grant at 571-272-7294

All other inquiries concerning the examination or status of the application is accessible in the PAIR system at http://www.uspto.gov/ebc/index.html.

The application is being forwarded to the examiner for action on the merits commensurate with this decision.

/Christopher Grant/
Christopher Grant
Quality Assurance Specialist
Technology Center 2400

UNITED STATES PATENT AND TRADEMARK OFFICE

UNITED STATES DEPARTMENT OF COMMERCE
United States Patent and Trademark Office
Address: COMMISSIONER FOR PATENTS
P.O. Box 1450
Alexandria, Virginia 22313-1450
www.uspto.gov

APPLICATION NO.	FILING DATE	FIRST NAMED INVENTOR	ATTORNEY DOCKET NO.	CONFIRMATION NO.
12/473,721	05/28/2009	Richard M. Roman JR.	087A.0132.U1(US)	1143

29683 7590 08/01/2011
HARRINGTON & SMITH
4 RESEARCH DRIVE, Suite 202
SHELTON, CT 06484-6212

EXAMINER
TRINH, MINH N

ART UNIT	PAPER NUMBER
3729	

MAIL DATE	DELIVERY MODE
08/01/2011	PAPER

Please find below and/or attached an Office communication concerning this application or proceeding.

The time period for reply, if any, is set in the attached communication.

UNITED STATES PATENT AND TRADEMARK OFFICE

Commissioner for Patents
United States Patent and Trademark Office
P.O. Box 1450
Alexandria, VA 22313-1450
www.uspto.gov

HARRINGTON & SMITH
4 RESEARCH DRIVE, Suite 202
SHELTON CT 06484-6212

In re Application of:
ROMAN, RICHARD M. JR. et al
Serial No. 12/473,721
Filed: May 28, 2009

Docket No:	087A.0132.U1(US) CRIMPING TOOL CONNECTOR LOCATOR	DECISION ON PETITION UNDER 37 CFR § 1.181

This is a decision on the petition filed on July 14, 2011 under 37 CFR 1.181 requesting reconsideration and withdrawal of the restriction requirement of February 17, 2011. This petition is being considered pursuant to 37 CFR § 1.144 and 37 CFR § 1.181, and no fee is required.

The petition is granted.

After consulting with the examiner, the requested relief is granted. The restriction requirement mailed on February 17, 2011 is hereby withdrawn. Non-elected claims will be rejoined with the elected invention. Without a proper restriction in accordance with Chapter 800 of the MPEP, the examiner should issue an Office action to rejoin and treat the non-elected claims on the merits when considering the applicant's response to the outstanding Office action of April 14, 2011.

The application is being forwarded to the examiner via Supervisory Patent Examiner of Art Unit 3729 awaiting the applicant's response to the outstanding Office action mailed on April 14, 2011. Any inquiry regarding this decision should be directed to Henry C. Yuen, Special Programs Examiner, at (571) 272-4856.

PETITION GRANTED.

Donald T. Hajec, Director
Technology Center 3700

PTO/SB/20PCT-KR (06-10)
Approved for use through 01/31/2012. OMB 0651-0058
U.S. Patent and Trademark Office; U.S. DEPARTMENT OF COMMERCE

Under the Paperwork Reduction Act of 1995, no persons are required to respond to a collection of information unless it displays a valid OMB control number.

REQUEST FOR PARTICIPATION IN THE PATENT COOPERATION TREATY – PATENT PROSECUTION HIGHWAY (PCT-PPH) PILOT PROGRAM BETWEEN THE KOREAN INTELLECTUAL PROPERTY OFFICE (KIPO) AND THE USPTO

Application No.:	12/473,731-Conf. #1167	Filing Date:	May 28, 2009
First Named Inventor:	Mark S. Barrett		
Title of the Invention:	LIMITED SLIP DIFFERENTIAL WITH POSITIVE LUBE FLOW TO CLUTCH PLATES		

THIS REQUEST FOR PARTICIPATION IN THE PCT-PPH PILOT PROGRAM ALONG WITH THE REQUIRED DOCUMENTS MUST BE SUBMITTED VIA EFS-WEB. INFORMATION REGARDING EFS-WEB IS AVAILABLE AT HTTP://WWW.USPTO.GOV/EBC/EFS_HELP.HTML.

APPLICANT HEREBY REQUESTS PARTICIPATION IN THE PCT-PPH PROGRAM AND PETITIONS TO MAKE THE ABOVE-IDENTIFIED APPLICATION SPECIAL UNDER THE PCT-PPH PROGRAM.

The above-identified application is (1) a national stage entry of the corresponding PCT application, or (2) a national stage entry of another PCT application which claims priority to the corresponding PCT application, or (3) a national application that claims domestic/ foreign priority to the corresponding PCT application, or (4) a national application which forms the basis for the priority claim in the corresponding PCT application, or (5) a continuing application of a U.S. application that satisfies one of (1) to (4) above, or (6) a U.S. application that claims domestic benefit to a U.S. provisional application which forms the basis for the priority claim in the corresponding PCT application.

The corresponding PCT application number(s) is/are: PCT/US2010/036624

The international date of the corresponding PCT application(s) is/are: May 28, 2010

I. **List of Required Documents:**

a. **A copy of the latest international work product (WO/ISA, WO/IPEA, or IPER) in the above-identified corresponding PCT application(s).**

☐ Is attached.

☒ Is not attached because the document is already in the U.S. application.

b. **A copy of all claims which were indicated as having novelty, inventive step and industrial applicability in the above-identified corresponding PCT appliction(s).**

☐ Is attached.

☒ Is not attached because the document is already in the U.S. application.

c. **English translations of the documents in a. and b. above are attached (if the documents are not in the English language). A statement that the English translation is accurate is attached for the document in b. above.**

Under the Paperwork Reduction Act of 1995, no persons are required to respond to a collection of information unless it displays a valid OMB control number.

REQUEST FOR PARTICIPATION IN THE PCT-PPH PILOT PROGRAM BETWEEN THE KIPO AND THE USPTO
(continued)

Application No.:	12/473,731-Conf. #1167
First Named Inventor:	Mark S. Barrett

d. **(1) An information disclosure statement listing the documents cited in the international work products (ISR, WO/ISA, WO/IPEA, IPER) of the corresponding PCT application.**

[ ] Is attached.

[x] Has already been filed in the above-identified U.S. application on January 10, 2011 & May 28, 2010

(2) Copies of all documents (except) for U.S. patents or U.S. patent application publications)

[ ] Are attached.

[x] Have already been filed in the above-identified U.S. application on January 10, 2011 & May 28, 2010

II. Claims Correspondence Table:

Claims in US Application	Patentable Claims in the corresponding PCT Application	Explanation regarding the correspondence
1 – 12	1 – 12	US Claims 1 – 12 and patentable PCT Claims 1 – 12 are identical. US Claims 13 and 14 have been cancelled via the Preliminary Amendment submitted concurrently herewith.

III. All the claims in the US application sufficiently correspond to the patentable claims in the corresponding PCT application.

Signature		Date	November 18 2011
Name (Print/Typed)	Michael D. Zalobsky	Registration Number	45,512

16322838.1

UNITED STATES PATENT AND TRADEMARK OFFICE

Commissioner for Patents
United States Patent and Trademark Office
P.O. Box 1450
Alexandria, VA 22313-1450
www.uspto.gov

HARNESS, DICKEY & PIERCE, PLC
P.O. BOX 828
BLOOMFIELD HILLS, MI 48303

In re Application of	**: DECISION ON REQUEST TO**
Mark S. BARRETT et al.	**: PARTICIPATE IN THE PATENT**
Application No.: 12/473,731	**: PROSECUTION HIGHWAY**
Filed: May 28, 2009	**: PROGRAM AND PETITION**
Attorney Docket No.: 9539-000209/US	**: TO MAKE SPECIAL UNDER**
Title: Limited Slip Differential with	**: 37 CFR 1.102(a)**
Positive Lube Flow to Clutch Plates	

This is a decision on the request to participate in the PCT Patent Prosecution Highway (PCT-PPH) pilot program and the petition under 37 CFR 1.102(a), filed on November 18, 2011, to make the above-identified application special.

The request and petition are **DENIED**.

Discussion

A grantable request to participate in the PCT-PPH pilot program and petition to make special require:

(1) The U.S. application must have an eligible relationship to one or more PCT applications where the ISA or IPEA are the JPO, EPO, KIPO, IPAU, Russia, Spain, Finland, Austria, or USPTO;

(2) At least one claim in the PCT application has novelty, inventive step, and industrial applicability and must be free of any observations in Box VIII in the latest work product in the international stage or applicant must identify and explain why the claim(s) is/are not subject to the observation in Box VIII;

(3) Applicant must submit a copy of the claim(s) from the PCT application(s) that have novelty, inventive step, and industrial applicability along with an English translation thereof and a statement that the English translation is accurate, if the claims are not in the English language;

(4) All the claims in the U.S. application must sufficiently correspond or be amended to sufficiently correspond to the claim(s) that have novelty, inventive step, and industrial applicability in the PCT application(s);

(5) Examination of the U.S. application has not begun;

(6) Applicant must submit a copy of the latest international work product from the PCT application indicating that the claim(s) have novelty, inventive step, and industrial applicability along with an English translation thereof.

(7) Applicant must submit an IDS listing the documents cited by the PCT examiner in the international work product along with copies of documents except U.S. patents or U.S. patent application publications.

(8) Applicant is required to submit a claims correspondence table in English which indicates how all the claims in the U.S. application correspond to the claims indicated as having novelty, inventive step and industrial applicability in the latest international work product.

The request to participate in the PPH pilot program and petition do not comply with the above requirement: (4). A non-final rejection has been entered for the instant case on February 7, 2012.

Telephone inquiries concerning this decision should be directed to Joanne Hama at (571) 272-2911 or in her absence, the undersigned at (571) 272-7099.

All other inquiries concerning the examination or status of the application is accessible in the PAIR system at http://www.uspto.gov/ebc/index.html.

Anthony Knight
Director
Office of Petitions

UNITED STATES PATENT AND TRADEMARK OFFICE

UNITED STATES DEPARTMENT OF COMMERCE
United States Patent and Trademark Office
Address: COMMISSIONER FOR PATENTS
P.O. Box 1450
Alexandria, Virginia 22313-1450
www.uspto.gov

APPLICATION NO.	FILING DATE	FIRST NAMED INVENTOR	ATTORNEY DOCKET NO.	CONFIRMATION NO.
12/473,881	05/28/2009	Shuji Uemura	EXPL-008-1	1445

81163 7590 04/18/2011
LAW OFFICE OF ALAN W. CANNON
942 MESA OAK COURT
SUNNYVALE, CA 94086

EXAMINER
MENDOZA, MICHAEL G

ART UNIT	PAPER NUMBER
3734	

MAIL DATE	DELIVERY MODE
04/18/2011	PAPER

Please find below and/or attached an Office communication concerning this application or proceeding.

The time period for reply, if any, is set in the attached communication.

UNITED STATES DEPARTMENT OF COMMERCE
U.S. Patent and Trademark Office
Address: COMMISSIONER FOR PATENTS
P.O. Box 1450
Alexandria, Virginia 22313-1450

APPLICATION NO./ CONTROL NO.	FILING DATE	FIRST NAMED INVENTOR / PATENT IN REEXAMINATION	ATTORNEY DOCKET NO.
12473881	5/28/09	UEMURA ET AL.	EXPL-008-1

EXAMINER
MICHAEL G.. MENDOZA

ART UNIT	PAPER
3734	20110404

DATE MAILED:

LAW OFFICE OF ALAN W. CANNON
942 MESA OAK COURT
SUNNYVALE, CA 94086

Please find below and/or attached an Office communication concerning this application or proceeding.

Commissioner for Patents

1. In view of the papers filed 11/17/2009, it has been found that this nonprovisional application, as filed, through error and without deceptive intent, improperly set forth the inventorship, and accordingly, this application has been corrected in compliance with 37 CFR 1.48(a). The inventorship of this application has been changed by the addition of inventor Narvel M. Brooks III.

The application will be forwarded to the Office of Initial Patent Examination (OIPE) for issuance of a corrected filing receipt, and correction of Office records to reflect the inventorship as corrected.

/Gary Jackson/
Supervisory Patent Examiner, Art Unit 3734

/M. G. M./
Examiner, Art Unit 3734

UNITED STATES PATENT AND TRADEMARK OFFICE

Commissioner for Patents
United States Patent and Trademark Office
P.O. Box 1450
Alexandria, VA 22313-1450
www.uspto.gov

QUALCOMM INCORPORATED
5775 MOREHOUSE DR.
SAN DIEGO CA 92121

MAILED
JAN 24 2011
OFFICE OF PETITIONS

In re Application of :
Chang :
Application No. 12/473,882 :
Filed: 28 May, 2009 :
Attorney Docket No. 082648 :

DECISION

This is a decision on the petition filed on 6 August, 2010, pursuant to 37 C.F.R. §1.137(b) for revival of an application abandoned due to unintentional delay.

The petition under 37 C.F.R. §1.137(b) is **GRANTED**.

As to the Allegations
of Unintentional Delay

The requirements of a grantable petition pursuant to 37 C.F.R. §1.137(b) are the petition and fee therefor, a reply, a proper statement and/or showing of unintentional delay under the regulation, and, where applicable, a terminal disclaimer and fee.

BACKGROUND

The record reflects as follows:

Counsel failed to reply timely and properly to the Notice of Missing Parts (oath/declaration, surcharge) mailed on 11 June, 2009, with reply due absent extension of time on or before 11 August, 2009.

The application went abandoned by operation of law after midnight 11 August, 2009.

The Office mailed a Notice of Abandonment on 25 February, 2010.

On 6 August, 2010, Petitioner filed a petition (with fee) pursuant to 37 C.F.R. §1.137(b), averring unintentional delay, a reply in the form of the oath/declaration and surcharge, and made the statement of unintentional delay.

The availability of applications and application papers online to applicants/practitioners who diligently associate their Customer Number with the respective application(s) now provides an applicant/practitioner on-demand information as to events/transactions in an application.

Out of an abundance of caution, Petitioners always are reminded that those registered to practice and all others who make representations before the Office **must** inquire into the underlying facts of representations made to the Office and support averments with the appropriate documentation–since all owe to the Office the continuing duty to disclose.[1]

STATUTES, REGULATIONS AND ANALYSIS

Congress has authorized the Commissioner to "revive an application if the delay is shown to the satisfaction of the Commissioner to have been "unavoidable." 35 U.S.C. §133 (1994).[2]
The regulations at 37 C.F.R. §1.137(a) and (b) set forth the requirements for a Petitioner to revive a previously unavoidably or unintentionally, respectively, abandoned application under this congressional grant of authority.

Unintentional delays are those that do not satisfy the very strict statutory and regulatory requirements of unavoidable delay, and also, by definition, are not intentional.[3])

As to Allegations of Unintentional Delay

The requirements of a grantable petition pursuant to 37 C.F.R. §1.137(b) are the petition and fee therefor, a reply, a proper statement of unintentional delay under the regulation, and, where applicable, a terminal disclaimer and fee.

It appears that the requirements under the rule have been satisfied.

CONCLUSION

Accordingly, the petition pursuant to 37 C.F.R. §1.137(b) is **granted**.

---

[1] See supplement of 17 June, 1999. The Patent and Trademark Office is relying on petitioner's duty of candor and good faith and accepting a statement made by Petitioner. See Changes to Patent Practice and Procedure, 62 Fed. Reg. at 53160 and 53178, 1203 Off. Gaz. Pat. Office at 88 and 103 (responses to comments 64 and 109)(applicant obligated under 37 C.F.R. §10.18 to inquire into the underlying facts and circumstances when providing statements to the Patent and Trademark Office).

[2] 35 U.S.C. §133 provides:

35 U.S.C. §133 Time for prosecuting application.
Upon failure of the applicant to prosecute the application within six months after any action therein, of which notice has been given or mailed to the applicant, or within such shorter time, not less than thirty days, as fixed by the Commissioner in such action, the application shall be regarded as abandoned by the parties thereto, unless it be shown to the satisfaction of the Commissioner that such delay was unavoidable.

[3] Therefore, by example, an unintentional delay in the reply might occur if the reply and transmittal form are to be prepared for shipment by the US Postal Service, but other pressing matters distract one's attention and the mail is not timely deposited for shipment.

Application No. 12/473,882

The instant application is released to the Office of Patent Application Processing (OPAP) for further processing in due course.

Petitioner may find it beneficial to view Private PAIR within a fortnight of the instant decision to ensure that the revival has been acknowledged by the OPAP in response to this decision. It is noted that all inquiries with regard to status need be directed to the OPAP where that change of status must be effected—that does not occur in the Office of Petitions.

Telephone inquiries regarding this decision may be directed to the undersigned at (571) 272-3214—it is noted, however, that all practice before the Office is in writing (see: 37 C.F.R. §1.2[4]) and the proper authority for action on any matter in this regard are the statutes (35 U.S.C.), regulations (37 C.F.R.) and the commentary on policy (MPEP). Therefore, no telephone discussion may be controlling or considered authority for Petitioner's action(s).

/John J. Gillon, Jr./
John J. Gillon, Jr.
Senior Attorney
Office of Petitions

[4] The regulations at 37 C.F.R. §1.2 provide:
§1.2 Business to be transacted in writing.
All business with the Patent and Trademark Office should be transacted in writing. The personal attendance of applicants or their attorneys or agents at the Patent and Trademark Office is unnecessary. The action of the Patent and Trademark Office will be based exclusively on the written record in the Office. No attention will be paid to any alleged oral promise, stipulation, or understanding in relation to which there is disagreement or doubt.

UNITED STATES PATENT AND TRADEMARK OFFICE

Commissioner for Patents
United States Patent and Trademark Office
P.O. Box 1450
Alexandria, VA 22313-1450
www.uspto.gov

COOLEY LLP
ATTN: PATENT GROUP
SUITE 1100
777 - 6TH STREET, NW
WASHINGTON DC 20001

MAILED

SEP 20 2011

OFFICE OF PETITIONS

In re Application of	:	
KENNEDY, John W.	:	
Application No. 12/473,973	:	DECISION ON PETITION
Filed: May 28, 2009	:	TO WITHDRAW
Attorney Docket No. ZGII-001/01US 307805-2005	:	FROM RECORD
	:	

This is a decision on the Request to Withdraw as attorney or agent under 37 C.F.R. § 1.36(b) or 37 C.F.R. § 10.40 filed August 11, 2011.

The request is **NOT APPROVED**.

A review of the file record indicates that Customer Number 58249 does not have power of attorney in this patent application nor is there any statement or evidence of record of employment in or otherwise being engaged in the proceedings in this patent application. Accordingly, the request to withdraw under 37 C.F.R. § 1.36(b) is not applicable.

All future communications from the Office will continue to be directed to the above-listed address until otherwise properly notified by the applicant.

Telephone inquires concerning this decision should be directed to the undersigned at (571) 272-4231.

Michelle R. Eason
Paralegal Specialist
Office of Petitions

UNITED STATES PATENT AND TRADEMARK OFFICE

Commissioner for Patents
United States Patent and Trademark Office
P.O. Box 1450
Alexandria, VA 22313-1450
www.uspto.gov

PATENT DOCKET ADMINISTRATOR
LOWENSTEIN SANDLER PC
65 Livingston Avenue
Roseland NJ 07068

MAILED
FEB 01 2012
OFFICE OF PETITIONS

In re Application of	:	
DeHaan et al.	:	DECISION
Application No. 12/473987	:	ON PETITION
Filing or 371(c) Date: 05/28/2009	:	
Title of Invention:	:	
METHODS AND SYSTEMS FOR FLEXIBLE	:	
CLOUD MANAGEMENT WITH POWER	:	
MANAGEMENT SUPPORT	:	

This Decision is in response to the petition filed December 22, 2011, requesting waiver of the signature of a nonsigning inventor on a 37 CFR 1.131 Declaration. The petition is properly treated under 37 CFR 1.183.

The petition is **granted**.

This application was filed on May 28, 2009, and named Michael Paul DeHaan, Scott Jared Hensen and John Joseph Eckersberg II as inventors.

On December 22, 2011, a declaration under 37 CFR 1.131 signed by Scott Jared Hensen and John Joseph Eckersberg II, was filed.

Applicant/Petitioner files the present petition and provides, in relevant part, that a letter, along a copy of the application, the currently pending claims and a Declaration under 37 CFR 1.131, were sent and delivered to inventor Michael Paul DeHaan via FedEx. Inventor DeHaan has not respomded to the letter.

The MPEP 715.04, Swearing back of Reference, Affidavit or Declarant Under 37 CFR 1.131, provides in relevant part

> Where one or more of the named inventors of the subject matter of the rejected claim(s) (who had originally signed the oath or declaration for patent application under 37 CFR 1.63) is now unavailable to sign an affidavit or declaration under 37 CFR 1.131, the affidavit or declaration under 37 CFR 1.131 may be signed by the remaining joint

> inventors provided a petition under 37 CFR 1.183 requesting waiver of the signature of the unavailable inventor be submitted with the affidavit or declaration under 37 CFR 1.131. Proof that the non-signing inventor is unavailable or cannot be found similar to the proof required for a petition under 37 CFR 1.47 must be submitted with the petition under 37 CFR 1.183 (see MPEP § 409.03(d)). Petitions under 37 CFR 1.183 are decided by the Office of Petitions (see MPEP § 1002.02(b)).

This section states that a party qualified under 37 CFR 1.42, 1.43 or 1.47 may make the affidavit when it is not possible to produce the affidavit or declaration of the inventor, and that waiver of the signature requirement of the unavailable inventor may be demonstrated by proof similar to that required in a petition under 37 CFR 1.47. In discussing waiver requirements under 37 CFR 1.183, the Office is guided by proof similar to that required when an Applicant is unavailable. In this instance, Applicant asserts that the inventors refuse to join in the Declaration.

Analysis and Conclusion

The above-identified application and papers have been reviewed and found in compliance with 37 CFR 1.47(a).

Petitioner has shown that the non-signing inventor, Michael Paul DeHaan, refuses to sign the 131 Declaration.

The petition is granted. The balance of the petition fee, $200.00, has been charged to petitioner's deposit account[1].

The application is being referred to Technology Center Art Unit 2455 for processing of the reply to the Office action filed December 22, 2011, including the response under 37 CFR 1.111 and 131 Declaration signed by inventors Scott Jared Hensen and John Joseph Eckersberg II, and for continued examination in the normal course of business.

Telephone inquiries concerning this matter should be directed to the undersigned at (571) 272-3232.

/DLW/

Derek L. Woods
Attorney
Office of Petitions

[1] The fee for a petition under 37 CFR 1.183 (fee code 1462), is $400.00.

UNITED STATES PATENT AND TRADEMARK OFFICE

Commissioner for Patents
United States Patent and Trademark Office
P.O. Box 1450
Alexandria, VA 22313-1450
www.uspto.gov

PERKINS COIE LLP
P.O. Box 1208
Seattle, WA 98111-1208

MAILED

MAR 23 2011

OFFICE OF PETITIONS

In re Application of	:	
Matthew K. Gray, et al.	:	
Application No. 12/474,020	:	DECISION ON PETITION
Filed: May 28, 2009	:	TO WITHDRAW
Attorney Docket No. 43390-8059.US02	:	FROM RECORD
	:	

This is a decision on the Request to Withdraw as attorney or agent of record under 37 C.F.R. § 1.36(b), filed February 9, 2011.

The request is **APPROVED**.

A grantable request to withdraw as attorney/agent of record must be signed by every attorney/agent seeking to withdraw or contain a clear indication that one attorney is signing on behalf of another/others. A request to withdraw will not be approved unless at least 30 (thirty) days would remain between the date of approval and the later of the expiration date of a time to file a response or the expiration date of the maximum time period which can be extended under 37 C.F.R. § 1.136(a).

The request was signed by Brian R. Coleman on behalf of all attorneys of record. All attorneys/agents have been withdrawn. Applicant is reminded that there is no attorney of record at this time.

All future communications from the Office will be directed to the assignee of the entire interest at the first copied address below until otherwise properly notified by the applicant.

There is an outstanding Office action mailed October 4, 2010 that requires a reply from the applicant.

Telephone inquiries concerning this decision should be directed to Terri Johnson at 571-272-2991.

/Terri Johnson/
Terri Johnson
Petitions Examiner
Office of Petitions

cc: **Trapeze Networks, Inc.**
c/o Juniper Networks, Inc.
1194 North Mathilda Avenue
Sunnyvale, CA 94089-1206

UNITED STATES PATENT AND TRADEMARK OFFICE

UNITED STATES DEPARTMENT OF COMMERCE
United States Patent and Trademark Office
Address: COMMISSIONER FOR PATENTS
P.O. Box 1450
Alexandria, Virginia 22313-1450
www.uspto.gov

APPLICATION NUMBER	FILING OR 371(C) DATE	FIRST NAMED APPLICANT	ATTY. DOCKET NO./TITLE
12/474,020	05/28/2009	Matthew K. Gray	43390-8059.US02

CONFIRMATION NO. 1714

22918
PERKINS COIE LLP
P.O. BOX 1208
SEATTLE, WA 98111-1208

POWER OF ATTORNEY NOTICE

OC000000046700370

Date Mailed: 03/22/2011

NOTICE REGARDING CHANGE OF POWER OF ATTORNEY

This is in response to the Power of Attorney filed 02/09/2011.

- The withdrawal as attorney in this application has been accepted. Future correspondence will be mailed to the new address of record. 37 CFR 1.33.

/tsjohnson/

Office of Data Management, Application Assistance Unit (571) 272-4000, or (571) 272-4200, or 1-888-786-0101

PTO/SB/20PCT-FI (01-11)
Approved for use through 01/31/2012. OMB 0651-0058
U.S. Patent and Trademark Office; U. S. DEPARTMENT OF COMMERCE
Under the Paperwork Reduction Act of 1995, no persons are required to respond to a collection of information unless it displays a valid OMB control number.

REQUEST FOR PARTICIPATION IN THE PATENT COOPERATION TREATY - PATENT PROSECUTION HIGHWAY (PCT-PPH) PILOT PROGRAM BETWEEN THE NATIONAL BOARD OF PATENTS AND REGISTRATION OF FINLAND (NBPR) AND THE USPTO

Application No:	12/474,032	Filing date:	05-28-2009
First Named Inventor:	Neil Emerton		
Title of the Invention:	MAKING AN OPTIC WITH A CLADDING		

THIS REQUEST FOR PARTICIPATION IN THE PCT-PPH PILOT PROGRAM ALONG WITH THE REQUIRED DOCUMENTS MUST BE SUBMITTED VIA EFS-WEB. INFORMATION REGARDING EFS-WEB IS AVAILABLE AT HTTP://WWW.USPTO.GOV/EBC/EFS_HELP.HTML

APPLICANT HEREBY REQUESTS PARTICIPATION IN THE PCT-PPH PROGRAM AND PETITIONS TO MAKE THE ABOVE-IDENTIFIED APPLICATION SPECIAL UNDER THE PCT-PPH PROGRAM.

The above-identified application is (1) a national stage entry of the corresponding PCT application, or (2) a national stage entry of another PCT application which claims priority to the corresponding PCT application, or (3) a national application that claims domestic/ foreign priority to the corresponding PCT application, or (4) a national application which forms the basis for the priority claim in the corresponding PCT application, or (5) a continuing application of a U.S. application that satisfies one of (1) to (4) above, or (6) a U.S. application that claims domestic benefit to a U.S. provisional application which forms the basis for the priority claim in the corresponding PCT application.

The corresponding PCT application number(s) is/are: PCT/US10/35305

The international filing date of the corresponding PCT application(s) is/are: May 18, 2010

I. List of Required Documents:

a. **A copy of the latest international work product (WO/ISA, WO/IPEA, or IPER) in the above–identified corresponding PCT application(s)**

- [x] Is attached.
- [ ] Is not attached because the document is already in the U.S. application.

b. **A copy of all claims which were indicated as having novelty, inventive step and industrial applicability in the above-identified corresponding PCT application(s).**

- [x] Is attached.
- [ ] Is not attached because the document is already in the U.S. application.

c. **English translations of the documents in a. and b. above are attached (if the documents are not in the English language). A statement that the English translation is accurate is attached for the document in b. above.**

This collection of information is required by 35 U.S.C. 119, 37 CFR 1.55, and 37 CFR 1.102(d). The information is required to obtain or retain a benefit by the public, which is to file (and by the USPTO to process) an application. Confidentiality is governed by 35 U.S.C. 122 and 37 CFR 1.11 and 1.14. This collection is estimated to take 2 hours to complete, including gathering, preparing, and submitting the completed application form to the USPTO. Time will vary depending upon the individual case. Any comments on the amount of time you require to complete this form and/or suggestions for reducing this burden should be sent to the Chief Information Officer, U.S. Patent and Trademark Office, U.S. Department of Commerce, P.O. Box 1450, Alexandria, VA 22313-1450. DO NOT SEND FEES OR COMPLETED FORMS TO THIS ADDRESS.

Approved for use through 01/31/2012. OMB 0651-0058
U.S.Patent and Trademark Office; U.S. DEPARTMENT OF COMMERCE

Under the Paperwork Reduction Act of 1995, no persons are required to respond to a collection of information unless it displays a valid OMB control number.

REQUEST FOR PARTICIPATION IN THE PCT-PPH PILOT PROGRAM BETWEEN THE NBPR AND THE USPTO

(continued)

Application No.:	12/474,032
First Named Inventor:	Neil Emerton

d. **(1) An information disclosure statement listing the documents cited in the international work products (ISR, WO/ISA, WO/IPEA, IPER) of the corresponding PCT application.**

☐ Is attached

☑ Has already been filed in the above-identified U.S. application on January 7, 2011

(2) Copies of all documents (except) for U.S. patents or U.S. patent application publications)

☑ Are attached.

☐ Have already been filed in the above-identified U.S. application on _____

II. Claims Correspondence Table:

Claims in US Application	Patentable Claims in the corresponding PCT Application	Explanation regarding the correspondence
1-15	1-15	Claims are identical except for numerical references that refer to the drawings in the PCT application.
16	N/A	US Claim 16 is dependent upon claim 10, which corresponds to PCT claim 10.
17	N/A	US Claim 17 sufficiently corresponds to the combination of elements of US Claims 1, 5, and 10 (PCT Claims 1, 5 and 10).
18	N/A	US Claim 18 is dependent on US Claim 17, which is patentable based on the above comment
19	N/A	US Claim 19 sufficiently corresponds to the combination of elements of US Claims 1, 5, 10 and 16 (PCT Claims 1, 5, 10).
20	N/A	US Claim 20 is dependent on US Claim 19, which is patentable based on the above comment.

III. All the claims in the US application sufficiently correspond to the patentable claims in the corresponding PCT application.

Signature	Date
Name (Print/Typed)	Registration Number

Privacy Act Statement

The **Privacy Act of 1974 (P.L. 93-579)** requires that you be given certain information in connection with your submission of the attached form related to a patent application or patent. Accordingly, pursuant to the requirements of the Act, please be advised that: (1) the general authority for the collection of this information is 35 U.S.C. 2(b)(2); (2) furnishing of the information solicited is voluntary; and (3) the principal purpose for which the information is used by the U.S. Patent and Trademark Office is to process and/or examine your submission related to a patent application or patent. If you do not furnish the requested information, the U.S. Patent and Trademark Office may not be able to process and/or examine your submission, which may result in termination of proceedings or abandonment of the application or expiration of the patent.

The information provided by you in this form will be subject to the following routine uses:

1. The information on this form will be treated confidentially to the extent allowed under the Freedom of Information Act (5 U.S.C. 552) and the Privacy Act (5 U.S.C 552a). Records from this system of records may be disclosed to the Department of Justice to determine whether disclosure of these records is required by the Freedom of Information Act.
2. A record from this system of records may be disclosed, as a routine use, in the course of presenting evidence to a court, magistrate, or administrative tribunal, including disclosures to opposing counsel in the course of settlement negotiations.
3. A record in this system of records may be disclosed, as a routine use, to a Member of Congress submitting a request involving an individual, to whom the record pertains, when the individual has requested assistance from the Member with respect to the subject matter of the record.
4. A record in this system of records may be disclosed, as a routine use, to a contractor of the Agency having need for the information in order to perform a contract. Recipients of information shall be required to comply with the requirements of the Privacy Act of 1974, as amended, pursuant to 5 U.S.C. 552a(m).
5. A record related to an International Application filed under the Patent Cooperation Treaty in this system of records may be disclosed, as a routine use, to the International Bureau of the World Intellectual Property Organization, pursuant to the Patent Cooperation Treaty.
6. A record in this system of records may be disclosed, as a routine use, to another federal agency for purposes of National Security review (35 U.S.C. 181) and for review pursuant to the Atomic Energy Act (42 U.S.C. 218(c)).
7. A record from this system of records may be disclosed, as a routine use, to the Administrator, General Services, or his/her designee, during an inspection of records conducted by GSA as part of that agency's responsibility to recommend improvements in records management practices and programs, under authority of 44 U.S.C. 2904 and 2906. Such disclosure shall be made in accordance with the GSA regulations governing inspection of records for this purpose, and any other relevant (*i.e.*, GSA or Commerce) directive. Such disclosure shall not be used to make determinations about individuals.
8. A record from this system of records may be disclosed, as a routine use, to the public after either publication of the application pursuant to 35 U.S.C. 122(b) or issuance of a patent pursuant to 35 U.S.C. 151. Further, a record may be disclosed, subject to the limitations of 37 CFR 1.14, as a routine use, to the public if the record was filed in an application which became abandoned or in which the proceedings were terminated and which application is referenced by either a published application, an application open to public inspection or an issued patent.
9. A record from this system of records may be disclosed, as a routine use, to a Federal, State, or local law enforcement agency, if the USPTO becomes aware of a violation or potential violation of law or regulation.

PATENT

First Named Inventor: Neil Emerton
Application No.: 12/474,032
Filed: 05-28-2009
Customer No.: 69316
Title: MAKING AN OPTIC WITH A CLADDING

Attorney Docket No.: 326504.01
Group Art Unit: 1746
Examiner: YAO, SAMCHUAN CUA
Confirmation Number: 1738

Commissioner for Patents
P.O. Box 1460
Alexandria, VA 22313-1450

Statement on Request for Participation in the PCT-Patent Prosecution Highway Pilot Program

Dear Sir:

Applicant states that claims 1-15 in the US application sufficiently correspond to claims 1-15 in the PCT application. Additionally, although US claim 16 was omitted in the PCT application, it depends on claim 10, which was deemed patentable in the international search report. As such, applicant respectfully requests claim 16 in the US application also be considered.

As for the omitted claims, US independent claim 17 was not included in the PCT application, but US claim 17 sufficiently corresponds to the PCT claims through the combination of elements of US claims 1, 5 and 10, which correspond to PCT claims 1, 5 and 10.

US independent claim 19 was also not included in the PCT application, but US claim 19 sufficiently corresponds to the PCT claims through the combination of elements of US claims 1, 5, 10 and 16 which corresponds to PCT claims 1, 5 and 10.

US claims 18 and 20 are dependent upon US claims 17 and 19 respectively and through the above mentioned combination of elements also sufficiently correspond to the PCT claims.

Additionally, applicant would like to bring to attention the formatting differences in the PCT claims, specifically the numerical references that refer to the drawings. For your convenience, a copy of the claims in the PCT application is included.

Accordingly, applicant requests the petition to participate in the PCT – Patent Prosecution Highway Pilot Program be granted. If you have any questions, please do not hesitate to call the Applicant's attorney at the telephone number listed below.

Respectfully submitted,

Date: February 28, 2011

By: /James R. Banowsky/

Atty: James R. Banowsky
Reg. No.: 37,773
Direct telephone: (425) 705-3539
Microsoft Corporation
One Microsoft Way
Redmond WA 98052-6399

CERTIFICATE OF MAILING OR TRANSMISSION
(Under 37 CFR § 1.8(a)) or ELECTRONIC FILING

I hereby certify that this correspondence is being electronically deposited with the USPTO via EFS-Web on the date shown below:

February 28, 2011
Date

/Eric Matt/
Eric Matt

UNITED STATES PATENT AND TRADEMARK OFFICE

UNITED STATES DEPARTMENT OF COMMERCE
United States Patent and Trademark Office
Address: COMMISSIONER FOR PATENTS
P.O. Box 1450
Alexandria, Virginia 22313-1450
www.uspto.gov

APPLICATION NO.	FILING DATE	FIRST NAMED INVENTOR	ATTORNEY DOCKET NO.	CONFIRMATION NO.
12/474,032	05/28/2009	Neil Emerton	326504.01	1738

69316 7590 03/24/2011
MICROSOFT CORPORATION
ONE MICROSOFT WAY
REDMOND, WA 98052

EXAMINER
YAO, SAMCHUAN CUA

ART UNIT	PAPER NUMBER
1746	

NOTIFICATION DATE	DELIVERY MODE
03/24/2011	ELECTRONIC

Please find below and/or attached an Office communication concerning this application or proceeding.

The time period for reply, if any, is set in the attached communication.

Notice of the Office communication was sent electronically on above-indicated "Notification Date" to the following e-mail address(es):

DBOUTON@MICROSOFT.COM
vffiling@microsoft.com
stevensp@microsoft.com

UNITED STATES PATENT AND TRADEMARK OFFICE

Commissioner for Patents
United States Patent and Trademark Office
P.O. Box 1450
Alexandria, VA 22313-1450
www.uspto.gov

CST

March 23, 2011

In re application of	:	DECISION ON REQUEST TO
Neil Emerton et al	:	PARTICIPATE IN PATENT
Serial No. 12/474,032	:	PROSECUTION HIGHWAY
Filed: May 28, 2009	:	PROGRAM AND
For: MAKING AN OPTIC WITH	:	PETITION TO MAKE SPECIAL
A CLADDING	:	UNDER 37 CFR 1.102(a)

This is a decision on the request to participate in the Patent Prosecution Highway (PPH) pilot program filed February 28, 2011.

The request and petition are **DISMISSED** as moot. Specifically, a non-final Office Action was mailed in this application on March 18, 2011.

A grantable request to participate in the PPH pilot program and petition to make special require:

(1) The U.S. application must validly claim priority under 35 U.S.C. 119(a) to one or more applications filed in the JPO, note where the JPO application with similar claims is not the same application from which the U.S. application claims priority that the applicant must identify the relationship between the JPO application with similar claims and the JPO priority application;

(2) Applicant must submit a copy of:
   a. The allowable/patentable claim(s) from the JPO application(s) or if a copy of the allowable/patentable claims is available via the Dossier Access System (DAS) applicant may request the USPTO to obtain a copy from DAS; however, if the USPTO is unable to obtain a copy from the DAS, the applicant will be required to submit a copy;
   b. An English translation of the allowable/ patentable claim(s), if applicable; and
   c. A statement that the English translation is accurate, if applicable;

(3) Applicant must:
   a. Ensure all the claims in the U.S. application must sufficiently correspond or be amended to sufficiently correspond to the allowable/patentable claim(s) in the JPO application(s); and
   b. Submit a claims correspondence table in English;

(4) Examination of the U.S. application has not begun;

(5) Applicant must submit:
a. Documentation of prior office action:
i. a copy of the office action(s) just prior to the "Decision to Grant a Patent" from each of the JPO application(s) containing the allowable/patentable claims(s) or
ii. if the allowable/patentable claim(s) are from "Notification of Reasons for Refusal" then the Notification of Reasons for Refusal or
iii. if the JPO application is a first action allowance then no office action from the JPO is necessary should be indicated on the request/petition form:
Further, if a copy of the documents from a or b is available via the Dossier Access System (DAS), applicant may request the USPO obtain a copy from the DAS; however, if the USPTO is unable to obtain a copy of the DAS, the applicant will be required to submit a copy;
b. An English language translation of the JPO Office action from (5)(a)(i)-(ii) above if applicable; and
c. A statement that the English translation is accurate; and

(6) Applicant must submit:
a. An IDS listing the documents cited by the JPO examiner in the JPO office action (unless already submitted in this application)
b. Copies of documents except U.S. patents or U.S. patent application publications (unless already submitted in this application).

The request to participate in the PPH pilot program and petition fail because:

(4) Examination of the U.S. application has begun. Specifically, note that a non-final Office Action was mailed in this application on March 18, 2011.

Any inquiry regarding this decision should be directed to Christine Tierney, Quality Assurance Specialist, at (571) 272-1055.

All other inquiries concerning the examination or status of the application is accessible in the PAIR system at http://www.uspto.gov/ebc/index.html.

/Christine Tierney/

Christine Tierney
Quality Assurance Specialist
Technology Center 1700

UNITED STATES PATENT AND TRADEMARK OFFICE

UNITED STATES DEPARTMENT OF COMMERCE
United States Patent and Trademark Office
Address: COMMISSIONER FOR PATENTS
P.O. Box 1450
Alexandria, Virginia 22313-1450
www.uspto.gov

APPLICATION NO.	FILING DATE	FIRST NAMED INVENTOR	ATTORNEY DOCKET NO.	CONFIRMATION NO.
12/474,090	05/28/2009	Masaya ENDO	SUTOSH.415AUS	1843

7590 10/26/2010
KNOBBE MARTENS OLSON & BEAR LLP
2040 MAIN STREET
FOURTEENTH FLOOR
IRVINE, CA 92614

EXAMINER
TUNG, KEE M

ART UNIT	PAPER NUMBER
2628	

NOTIFICATION DATE	DELIVERY MODE
10/26/2010	ELECTRONIC

DECISION GRANTING PETITION UNDER 37 CFR 1.138(d)

The declaration of express abandonment is recognized

This is in response to the petition under 37 CFR 1.138(d), requesting for a refund of any previously paid search fee and excess claims fee in the above-identified application.

The petition is granted.

The express abandonment is recognized. Any previously paid search fee and excess claims fee are hereby refunded.

Telephone inquiries should be directed to the Office of Data Management at (571) 272-4200.

Betty Powell

Patent Publication Branch
Office of Data Management

FORM PET651G (Rev. 08/07)

UNITED STATES PATENT AND TRADEMARK OFFICE

UNITED STATES DEPARTMENT OF COMMERCE
United States Patent and Trademark Office
Address: COMMISSIONER FOR PATENTS
P.O. Box 1450
Alexandria, Virginia 22313-1450
www.uspto.gov

APPLICATION NO.	FILING DATE	FIRST NAMED INVENTOR	ATTORNEY DOCKET NO.	CONFIRMATION NO.
12/474,095	05/28/2009	Daisuke Hosokawa	6639P715	1854

8791 7590 04/13/2011
BLAKELY SOKOLOFF TAYLOR & ZAFMAN LLP
1279 OAKMEAD PARKWAY
SUNNYVALE, CA 94085-4040

EXAMINER
VORTMAN, ANATOLY

ART UNIT	PAPER NUMBER
2835	

MAIL DATE	DELIVERY MODE
04/13/2011	PAPER

Please find below and/or attached an Office communication concerning this application or proceeding.

The time period for reply, if any, is set in the attached communication.

UNITED STATES PATENT AND TRADEMARK OFFICE

Commissioner for Patents
United States Patent and Trademark Office
P.O. Box 1450
Alexandria, VA 22313-1450
www.uspto.gov

BLAKELY SOKOLOFF TAYLOR & ZAFMAN LLP
1279 OAKMEAD PARKWAY
SUNNYVALE CA 94085-4040

In re Application of	**: DECISION ON REQUEST TO**
Daisuke HOSOKAWA	**: PARTICIPATE IN THE PATENT**
Application No.: 12/474,095	**: PROSECUTION HIGHWAY**
Filed: 28 May 2009	**: PROGRAM AND PETITION**
Attorney Docket No.: 6639P715	**: TO MAKE SPECIAL UNDER**
For: INFORMATION PROCESSING APPARATUS	**: 37 CFR 1.102(a)**

This is a decision on the request to participate in the Patent Prosecution Highway (PPH) program and the petition under 37 CFR 1.102(a), filed 01 March 2011, to make the above-identified application special.

The request and petition are **GRANTED**.

Discussion

A grantable request to participate in the PPH pilot program and petition to make special require:

1. The U.S. application is
    a. a Paris Convention application which either
        i. validly claims priority under 35 U.S.C. 119(a) and 37 CFR 1.55 to one or more applications filed in the JPO, or
        ii. validly claims priority to a PCT application that contains no priority claims, or
    b. a national stage application under the PCT (an application which entered the national stage in the U.S. from a PCT international application after compliance with 35 U.S.C. 371), which PCT application
        i. validly claims priority to an application filed in the JPO, or
        ii. validly claims priority to a PCT application that contains no priority claims, or
        iii. contains no priority claim, or
    c. a so-called bypass application filed under 35 U.S.C. 111(a) which validly claims benefit under 35 U.S.C. 120 to a PCT application, which PCT application
        i. validly claims priority to an application filed in the JPO, or
        ii. validly claims priority to a PCT application that contains no priority claims, or
        iii. contains no priority claim;
2. Applicant must submit a copy of:

a. The allowable/patentable claim(s) from the JPO application(s);
b. An English translation of the allowable/patentable claim(s) and
c. A statement that the English translation is accurate;

3. Applicant must:
   a. Ensure all the claims in the U.S. application must sufficiently correspond or be amended to sufficiently correspond to the allowable/patentable claim(s) in the JPO application(s) and
   b. Submit a claims correspondence table in English;
4. Examination of the U.S. application has not begun;
5. Applicant must submit:
   a. Documentation of prior office action:
      i. a copy of the office action(s) just prior to the "Decision to Grant a Patent" from each of the JPO application(s) containing the allowable/patentable claim(s) or
      ii. if the allowable/patentable claims(s) are from a "Notification of Reasons for Refusal" then the Notification of Reasons for Refusal or
      iii. if the JPO application is a first action allowance then no office action from the JPO is necessary should be indicated on the request/petition form;
   b. An English language translation of the JPO Office action from (5)(a)(i)-(ii) above
   c. A statement that the English translation is accurate;
6. Applicant must submit:
   a. An IDS listing the documents cited by the JPO examiner in the JPO office action (unless already submitted in this application)
   b. Copies of the documents except U.S. patents or U.S. patent application publications (unless already submitted in this application);

The request to participate in the PPH pilot program and petition comply with the above requirements. Accordingly, the above-identified application has been accorded "special" status.

Inquiries concerning this decision should be directed to Lee W. Young at 571-272-4549.

All other inquiries concerning the examination or status of the application is accessible in the PAIR system at http://www.uspto.gov/ebc.index.html.

This application will be forwarded to the examiner for action on the merits commensurate with this decision once this application's formality reviews have been completed.

Lee W. Young
TQAS, Technology Center 2800 – Semiconductors
Electrical & Optical Systems & Components

UNITED STATES PATENT AND TRADEMARK OFFICE

Commissioner for Patents
United States Patent and Trademark Office
P.O. Box 1450
Alexandria, VA 22313-1450
www.uspto.gov

Agilent Technologies, Inc. in care of:
CPA Global
P. O. Box 52050
Minneapolis MN 55402

MAILED
DEC 16 2011
OFFICE OF PETITIONS

In re Application of	:	
James L. Bertsch, et al.	:	
Application No. 12/474,160	:	DECISION GRANTING PETITION
Filed: May 28, 2009	:	UNDER 37 CFR 1.313(c)(2)
Attorney Docket No. 20090253-01	:	

This is a decision on the petition under 37 CFR 1.313(c)(2), filed, December 13, 2011 to withdraw the above-identified application from issue after payment of the issue fee.

The petition is **GRANTED**.

The above-identified application is withdrawn from issue for consideration of a submission under 37 CFR 1.114 (request for continued examination). *See* 37 CFR 1.313(c)(2).

Petitioner is advised that the issue fee paid on November 21, 2011 cannot be refunded. If, however, this application is again allowed, petitioner may request that it be applied towards the issue fee required by the new Notice of Allowance.[1]

The application file does not indicate a change of address has been filed in this case, although the address given on the petition differs from the address of record. A change of address should be filed in this case in accordance with MPEP 601.03. A courtesy copy of this decision is being mailed to the address noted on the petition. However, until otherwise instructed, all future correspondence regarding this application will be mailed solely to the address of record.

Telephone inquiries should be directed to Terri Johnson at (571) 272-2991.

---

[1] *The request to apply the issue fee to the new Notice may be satisfied by completing and returning the new Part B – Fee(s) Transmittal Form (along with any balance due at the time of submission). Petitioner is advised that the Issue Fee Transmittal Form must be completed and timely submitted to avoid abandonment of the application.*

This application is being referred to Technology Center AU 2881 for processing of the request for continued examination under 37 CFR 1.114 and for consideration of the concurrently filed information disclosure statement.

/Terri Johnson/
Terri Johnson
Petitions Examiner
Office of Petitions

cc: **Agilent Technologies, Inc.**
Volentine & Whitt, PLLC
Two Meridian Blvd.
Wyoming, PA 19610

UNITED STATES PATENT AND TRADEMARK OFFICE

Commissioner for Patents
United States Patent and Trademark Office
P.O. Box 1450
Alexandria, VA 22313-1450
www.uspto.gov

**TOWNSEND AND TOWNSEND AND CREW LLP/
PULMONX 017534
TWO EMBARCADERO CENTER, EIGHT FLOOR
SAN FRANCISCO CA 94111-383412474179**

MAILED

JUN 17 2011

OFFICE OF PETITIONS

In re Application of	:	
ALJURI, et al	:	
Application No. 12/474,169	:	DECISION ON PETITION
Filed: May 28, 2009	:	TO WITHDRAW
Attorney Docket No. 017534-004810US	:	FROM RECORD
	:	

This is a decision on the Request to Withdraw as attorney or agent of record under 37 C.F.R. 1.36(b), filed May 16, 2011.

The request is **NOT APPROVED.**

A grantable request to withdraw as attorney/agent of record must be signed by every attorney/agent seeking to withdraw or contain a clear indication that one attorney is signing on behalf of another/others. The Office requires the practitioner(s) requesting withdrawal to certify that he, she, or they have: (1) given reasonable notice to the client, prior to the expiration of the response period, that the practitioner(s) intends to withdraw from employment; (2) delivered to the client or a duly authorized representative of the client all papers and property (including funds) to which the client is entitled; and (3) notified the client of any responses that may be due and the time frame within which the client must respond, pursuant 37 CFR 10.40(c).

The request cannot be approved because there is no indication that the acts noted above at items (1) - (3) have been performed.

Further, the Office will no longer accept address changes to a new practitioner or law firm filed with a Request, absent the filing of a power of attorney to the new representative. The Office will either change the correspondence address of record to the most current address information provided for the assignee of the entire interest who properly became of record under 37 CFR 3.71 or, if no assignee of the entire interest has properly been made of record under 37 CFR 3.71, the most current address information provided for the first named inventor.

Accordingly, the request to withdraw from record cannot be approved because the request does not include the current correspondence address of a law firm or practitioner who has filed a proper power of attorney.

All future communications from the Office will continue to be directed to the above-identified address until otherwise properly notified.

Telephone inquiries concerning this decision should be directed to the undersigned at (571) 272- 6735.

/Diane C. Goodwyn/
Diane C. Goodwyn
Petitions Examiner
Office of Petitions

UNITED STATES PATENT AND TRADEMARK OFFICE

Commissioner for Patents
United States Patent and Trademark Office
P.O. Box 1450
Alexandria, VA 22313-1450
www.uspto.gov

**TOWNSEND AND TOWNSEND AND CREW LLP/
PULMONX 017534
TWO EMBARCADERO CENTER, EIGHT FLOOR
SAN FRANCISCO CA 94111-3834**

MAILED
JUN 17 2011
OFFICE OF PETITIONS

In re Application of	:	
NGUYEN, et al	:	
Application No. 12/474,179	:	DECISION ON PETITION
Filed: May 28, 2009	:	TO WITHDRAW
Attorney Docket No. 017534-004910US	:	FROM RECORD
	:	

This is a decision on the Request to Withdraw as attorney or agent of record under 37 C.F.R. 1.36(b), filed May 16, 2011.

The request is **NOT APPROVED.**

A grantable request to withdraw as attorney/agent of record must be signed by every attorney/agent seeking to withdraw or contain a clear indication that one attorney is signing on behalf of another/others. The Office requires the practitioner(s) requesting withdrawal to certify that he, she, or they have: (1) given reasonable notice to the client, prior to the expiration of the response period, that the practitioner(s) intends to withdraw from employment; (2) delivered to the client or a duly authorized representative of the client all papers and property (including funds) to which the client is entitled; and (3) notified the client of any responses that may be due and the time frame within which the client must respond, pursuant 37 CFR 10.40(c).

The request cannot be approved because there is no indication that the acts noted above at items (1) - (3) have been performed.

Further, the Office will no longer accept address changes to a new practitioner or law firm filed with a Request, absent the filing of a power of attorney to the new representative. The Office will either change the correspondence address of record to the most current address information provided for the assignee of the entire interest who properly became of record under 37 CFR 3.71 or, if no assignee of the entire interest has properly been made of record under 37 CFR 3.71, the most current address information provided for the first named inventor.

Accordingly, the request to withdraw from record cannot be approved because the request does not include the current correspondence address of a law firm or practitioner who has filed a proper power of attorney.

Future submissions should include an acceptable reason as described in 37 CFR 10.40. Please visit www.uspto.gov to review the updated Request for Withdrawal As Attorney or Agent (PTO/SB/83) form.

All future communications from the Office will continue to be directed to the above-identified address until otherwise properly notified.

Telephone inquiries concerning this decision should be directed to the undersigned at (571) 272- 6735.

/Diane C. Goodwyn/
Diane C. Goodwyn
Petitions Examiner
Office of Petitions

UNITED STATES PATENT AND TRADEMARK OFFICE

UNITED STATES DEPARTMENT OF COMMERCE
United States Patent and Trademark Office
Address: COMMISSIONER FOR PATENTS
P.O. Box 1450
Alexandria, Virginia 22313-1450
www.uspto.gov

APPLICATION NO.	FILING DATE	FIRST NAMED INVENTOR	ATTORNEY DOCKET NO.	CONFIRMATION NO.
12/474,204	05/28/2009	Gary L. Andersen	LBNL.026C1	1051

20995 7590 01/20/2012
KNOBBE MARTENS OLSON & BEAR LLP
2040 MAIN STREET
FOURTEENTH FLOOR
IRVINE, CA 92614

EXAMINER
WHISENANT, ETHAN C

ART UNIT	PAPER NUMBER
1634	

NOTIFICATION DATE	DELIVERY MODE
01/20/2012	ELECTRONIC

Please find below and/or attached an Office communication concerning this application or proceeding.

The time period for reply, if any, is set in the attached communication.

Notice of the Office communication was sent electronically on above-indicated "Notification Date" to the following e-mail address(es):

jcartee@kmob.com
efiling@kmob.com
eOAPilot@kmob.com

UNITED STATES PATENT AND TRADEMARK OFFICE

Commissioner for Patents
United States Patent and Trademark Office
P.O. Box 1450
Alexandria, VA 22313-1450
www.uspto.gov

JAN 1 8 2012

In re Application of	:	
Gary L. ANDERSON, et al	:	NOTICE OF WITHDRAWAL
Serial No. 12/474204	:	FROM ISSUE
Filed: May 28, 2009	:	UNDER 37 CFR 1.313(b)
For: ARRAY FOR DETECTING MICROBES	:	

The purpose of this communication is to inform you that the above-identified application is being withdrawn from issue pursuant to 37 CFR 1.313.

The application is being withdrawn to permit reopening of prosecution. The reasons therefore will be communicated to you by the examiner.

PTO records reveal that the issue fee has not been paid. If the issue fee has been submitted, the applicant may request a refund or may request that the fee be credited to a deposit account. However, applicant may wait until the application is either again found allowable or held abandoned. If the application is allowed, upon receipt of a new Notice of Allowance and Issue Fee Due, applicant may request that the previously submitted issue fee be applied toward payment of the issue fee in the amount identified on the new Notice of Allowance and Issue Fee Due. If the application is abandoned, applicant may request either a refund or a credit to a deposit account.

The application is being forwarded to the examiner for action.

George C. Elliott, for

Jacqueline M. Stone, Director
Technology Center 1600

KNOBBE MARTENS OLSON & BEAR LLP
2040 MAIN STREET
FOURTEENTH FLOOR
IRVINE, CA 92614

UNITED STATES PATENT AND TRADEMARK OFFICE

Commissioner for Patents
United States Patent and Trademark Office
P.O. Box 1450
Alexandria, VA 22313-1450
www.uspto.gov

LEON WHITNEY
1067 ERIN DR.
KENT, OH 44240

MAILED
AUG 04 2010
OFFICE OF PETITIONS

In re Application of
Leon Whitney
Application No. 12/474,255
Filed:
Attorney Docket No.

DECISION ON PETITION

This is a decision on the petition under the unavoidable provisions of 37 CFR 1.137(a), filed June 17, 2010, to revive the above-identified application.

The petition is **DISMISSED**.

The rules and statutory provisions governing the operations of the U.S. Patent and Trademark Office require payment of a fee on filing each petition to revive an abandoned application for patent based on unavoidable delay or to accept an unavoidably delayed payment of a fee for issuing a patent. In this instance, the fee required by law is $270. If applicant can qualify as a "small entity" and does so prior to or together with the payment of the fee, the fee will be one-half of the amount indicated. See 37 CFR 1.27.

The petition in the above-identified application was **not** accompanied by payment of the required fee. No consideration on the merits can be given that petition until the required fee is received.

Any further petition to revive must be submitted within **TWO (2) MONTHS** from the mail date of this decision. Extensions of time under 37 CFR 1.136(a) are permitted. The reconsideration request should include a cover letter entitled "Renewed Petition under 37 CFR 1.137(a)." This is not a final agency action within the meaning of 5 U.S.C.§ 704.

Further correspondence with respect to this matter should be addressed as follows:

By mail: Mail Stop PETITIONS
Commissioner for Patents
Post Office Box 1450
Alexandria, VA 22313-1450

By hand: Customer Service Window
Mail Stop Petitions
Randolph Building
401 Dulany Street
Alexandria, VA 22314

By fax: (571) 273-8300
ATTN: Office of Petitions

Telephone inquiries concerning this matter may be directed to the April M. Wise at (571) 272-1642. All other inquiries concerning this application should be directed to the Office of Patent Application Processing at their hotline 571-272-4000.

/dab/
David Bucci
Petitions Examiner
Office of Petitions

UNITED STATES PATENT AND TRADEMARK OFFICE

Commissioner for Patents
United States Patent and Trademark Office
P.O. Box 1450
Alexandria, VA 22313-1450
www.uspto.gov

LEON WHITNEY
1067 ERIN DRIVE
KENT, OH 44240

MAILED

OCT 05 2010

OFFICE OF PETITIONS

In re Application of	:	
Leon Whitney	:	
Application No. 12/474,255	:	DECISION ON PETITION
Filed: May 28, 2009	:	
Attorney Docket No.	:	

This is a decision on the petition, filed August 31, 2010, which is being treated as a petition under 37 CFR 1.181 (no fee) requesting withdrawal of the holding of abandonment in the above-identified application.

The petition is **GRANTED**.

This application was held abandoned for failure to reply to the Notice to File Missing Parts (Notice) mailed June 12, 2009, which set a two (2) month shortened statutory period for reply. A Notice of Abandonment was mailed on February 25, 2010.

Petitioner asserts that the Office action dated June 12, 2009 was not received.

A review of the written record indicates an irregularity in the mailing of the Office action of June 12, 2009. In this regard, the Notice in question was returned to the Office on June 22, 2009. Office records indicate that there a change of address was filed on July 9, 2009. Accordingly, as the Office action was returned to the Office as undeliverable as addressed; the Notice of Abandonment mailed February 25, 2010 is hereby **vacated** and **the holding of abandonment withdrawn**.

Telephone inquiries concerning this decision should be directed to April M. Wise at 571-272-1642. All other inquiries concerning the examination or status of this application should be directed to the Office of Patent Application Processing at their hotline 571-272-4000.

This application is being referred to the Office of Patent Application Processing for pre-examination processing of the reply received June 17, 2010.

/Carl Friedman/
Carl Friedman
Petitions Examiner
Office of Petitions

UNITED STATES PATENT AND TRADEMARK OFFICE

Commissioner for Patents
United States Patent and Trademark Office
P.O. Box 1450
Alexandria, VA 22313-1450
www.uspto.gov

LANIER FORD SHAVER
& PAYNE P.C.
P O BOX 2087
HUNTSVILLE AL 35804-2087

MAILED
MAY 3 1 2011
OFFICE OF PETITIONS

In re Application of :
Kaspar :
Application No. 12/474,256 : DECISION
Filed/Deposited: 28 May, 2009 :
Attorney Docket No. 029642-0380598 :

This is a decision on the petition filed on 25 February, 2011, pursuant to 37 C.F.R. §1.137(b) for revival of an application abandoned due to unintentional delay.

NOTE:

The record (including the petition filed on 25 February, 2011) does not necessitate a finding that the delay between midnight 12 September, 2009 (the date of abandonment), and 25 February, 2011 (the date of the filing of grantable petition), was not unintentional.

Rather, the Patent and Trademark Office is relying in this matter on the duty of candor and good faith of Petitioner Angela Holt (Reg. No. 51,814) when accepting Petitioner's representation that the delay in filing the response was unintentional.[1]

Moreover, it is not apparent whether the person signing the statement of unintentional delay was in a position to have firsthand or direct knowledge of the facts and circumstances of the delay at issue.

Nevertheless, such statement is being treated as having been made as the result of a reasonable inquiry into the facts and circumstances of such delay.[2] *In the event that such an inquiry has not been made, Petitioner* ***must*** *make such an inquiry.*

---

[1] See Changes to Patent Practice and Procedure, 62 Fed. Reg. at 53160 and 53178, 1203 Off. Gaz. Pat. Office at 88 and 103 (responses to comments 64 and 109)(applicant obligated under 37 C.F.R. §11.18 to inquire into the underlying facts and circumstances when providing the statement required by 37 C.F.R. §1.137(b) to the Patent and Trademark Office).

[2] See 37 C.F.R. §11.18(b) and Changes to Patent Practice and Procedure; Final Rule Notice, 62 Fed. Reg. 53131, 53178 (October 10, 1997), 1203 Off. Gaz. Pat. Office 63, 103 (October 21, 1997).

If such inquiry results in the discovery that it is not correct that the entire delay in filing the required reply from the due date for the reply until the filing of a grantable petition pursuant to 37 C.F.R. §1.137(b) was unintentional, Petitioner ***must*** *notify the Office.*

The petition pursuant to 37 C.F.R. §1.137(b) is **GRANTED**.

As to the Allegations
of Unintentional Delay

The requirements of a grantable petition pursuant to 37 C.F.R. §1.137(b) are the petition and fee therefor, a reply, a proper statement and/or showing of unintentional delay under the regulation, and, where applicable, a terminal disclaimer and fee

Petitioners' attentions always are directed to the guidance in the Commentary at MPEP §711.03(c)(II).

BACKGROUND

The record reflects as follows:

Petitioner failed to reply timely and properly to the Notice of Missing Parts mailed on 12 June, 2009, with reply due absent extension of time on or before 12 September, 2009.

The application went abandoned by operation of law after midnight 12 September, 2009.

The Office mailed the Notice of Abandonment on 25 February, 2010.

On 25 February, 2011, Petitioner filed, *inter alia*, a petition with fee pursuant to 37 C.F.R. §1.137(b), a reply in the form of, *inter alia*, an oath/declaration, fees and surcharge, and made the statement of unintentional delay.

As previously noted, the record (including the petition filed on 25 February, 2011) does not necessitate a finding that the delay between midnight 12 September, 2009 (the date of abandonment), and 25 February, 2011 (the date of the filing of grantable petition), was not unintentional.

Rather, the Patent and Trademark Office is relying in this matter on the duty of candor and good faith of Petitioner Angela Holt (Reg. No. 51,814) when accepting Petitioner's representation that the delay in filing the response was unintentional.[3]

Moreover, it is not apparent whether the person signing the statement of unintentional delay was in a position to have firsthand or direct knowledge of the facts and circumstances of the delay at issue.

Nevertheless, such statement is being treated as having been made as the result of a reasonable inquiry into the facts and circumstances of such delay.[4] *In the event that such an inquiry has not been made, Petitioner* ***must*** *make such an inquiry.*

If such inquiry results in the discovery that it is not correct that the entire delay in filing the required reply from the due date for the reply until the filing of a grantable petition pursuant to 37 C.F.R. §1.137(b) was unintentional, Petitioner ***must*** *notify the Office.*

The availability of applications and application papers online to applicants/practitioners who diligently associate their Customer Number with the respective application(s) now provides an applicant/practitioner on-demand information as to events/transactions in an application.

Out of an abundance of caution, Petitioners always are reminded that those registered to practice and all others who make representations before the Office **must** inquire into the underlying facts of representations made to the Office and support averments with the appropriate documentation–since all owe to the Office the continuing duty to disclose.[5]

STATUTES, REGULATIONS AND ANALYSIS

Congress has authorized the Commissioner to "revive an application if the delay is shown to the satisfaction of the Commissioner to have been "unavoidable." 35 U.S.C. §133 (1994).[6]

---

[3] See Changes to Patent Practice and Procedure, 62 Fed. Reg. at 53160 and 53178, 1203 Off. Gaz. Pat. Office at 88 and 103 (responses to comments 64 and 109)(applicant obligated under 37 C.F.R. §11.18(b), formerly §10.18 to inquire into the underlying facts and circumstances when providing the statement required by 37 C.F.R. §1.137(b) to the Patent and Trademark Office).

[4] See 37 C.F.R. §11.18(b), formerly §10.18(b) and Changes to Patent Practice and Procedure; Final Rule Notice, 62 Fed. Reg. 53131, 53178 (October 10, 1997), 1203 Off. Gaz. Pat. Office 63, 103 (October 21, 1997).

[5] See supplement of 17 June, 1999. The Patent and Trademark Office is relying on petitioner's duty of candor and good faith and accepting a statement made by Petitioner. See Changes to Patent Practice and Procedure, 62 Fed. Reg. at 53160 and 53178, 1203 Off. Gaz. Pat. Office at 88 and 103 (responses to comments 64 and 109)(applicant obligated under 37 C.F.R. §11.18 to inquire into the underlying facts and circumstances when providing statements to the Patent and Trademark Office).

[6] 35 U.S.C. §133 provides:

35 U.S.C. §133 Time for prosecuting application.

Upon failure of the applicant to prosecute the application within six months after any action therein, of which notice has been given or mailed to the applicant, or within such shorter time, not less than thirty days, as fixed by the Commissioner in such action, the application shall be regarded as abandoned by the parties thereto, unless it be shown to the satisfaction of the Commissioner that such delay was unavoidable.

The regulations at 37 C.F.R. §1.137(a) and (b) set forth the requirements for a Petitioner to revive a previously unavoidably or unintentionally, respectively, abandoned application under this congressional grant of authority.

Unintentional delays are those that do not satisfy the very strict statutory and regulatory requirements of unavoidable delay, and, by definition, are not intentional.[7]))

As to Allegations of
Unintentional Delay

The requirements of a grantable petition pursuant to 37 C.F.R. §1.137(b) are the petition and fee therefor, a reply, a proper statement of unintentional delay under the regulation, and, where applicable, a terminal disclaimer and fee.

It appears that the requirements under the rule have been satisfied.

CONCLUSION

Accordingly, the petition pursuant to 37 C.F.R. §1.137(b) is **granted**.

The instant application is released to the Office of Patent Application Processing (OPAP) for further processing in due course.

Petitioner may find it beneficial to view Private PAIR within a fortnight of the instant decision to ensure that the revival has been acknowledged by the OPAP in response to this decision. It is noted that all inquiries with regard to status need be directed to the OPAP where that change of status must be effected—that does not occur in the Office of Petitions.

[7] Therefore, by example, an unintentional delay in the reply might occur if the reply and transmittal form are to be prepared for shipment by the US Postal Service, but other pressing matters distract one's attention and the mail is not timely deposited for shipment.

Telephone inquiries regarding this decision may be directed to the undersigned at (571) 272-3214—it is noted, however, that all practice before the Office is in writing (see: 37 C.F.R. §1.2[8]) and the proper authority for action on any matter in this regard are the statutes (35 U.S.C.), regulations (37 C.F.R.) and the commentary on policy (MPEP). Therefore, no telephone discussion may be controlling or considered authority for Petitioner's action(s).

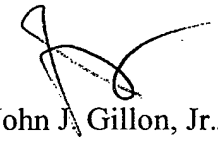

/John J. Gillon, Jr./
John J. Gillon, Jr.
Senior Attorney
Office of Petitions

[8] The regulations at 37 C.F.R. §1.2 provide:

§1.2 Business to be transacted in writing.

All business with the Patent and Trademark Office should be transacted in writing. The personal attdance of applicants or their attorneys or agents at the Patent and Trademark Office is unnecessary. The action of the Patent and Trademark Office will be based exclusively on the written record in the Office. No attention will be paid to any alleged oral promise, stipulation, or understanding in relation to which there is disagreement or doubt.

IN THE UNITED STATES PATENT AND TRADEMARK OFFICE

First Named Inventor: Peggy Lynn Baehmann	)
Confirmation No.: 1186	)
	)
Serial No.: 12/474,261	)
	)
Filing Date: 05-28-2009	)
Atty Docket No.: 236312-1	)

Commissioner for Patents
P.O. Box 1450
Alexandria, VA 22313-1450

Request for Renewed Petition
Under the Green Technology Pilot Program

SIR:

Applicant respectfully requests renewed reconsideration of Applicant's Petition to Make Special as provided in 75 Federal Register Notice 28554 of May 21, 2010 and 75 Federal Register Notice 69049 of November 10, 2010.

The undersigned attorney may be contacted at the number below to facilitate the resolution of any matters. Please charge any fees that are incurred in connection with this Statement to deposit account no. 09-0470.

Respectfully submitted,

General Electric Company

By : /Douglas D. Zhang/
Douglas D. Zhang
Reg. No. 37,985

Dated: December 9, 2010

GE Global Patent Operation
2 Corporate Drive, Suite 648
Shelton, CT 06484
203-944-6755

Doc Code: PET.GREEN
Document Description: Petition for Green Tech Pilot

PTO/SB/420 (11-10)
Approved for use through 01/31/2011. OMB 0651-0062
U.S. Patent and Trademark Office; U. S. DEPARTMENT OF COMMERCE
Under the Paperwork Reduction Act of 1995, no persons are required to respond to a collection of information unless it displays a valid OMB control number.

PETITION TO MAKE SPECIAL UNDER THE GREEN TECHNOLOGY PILOT PROGRAM

Attorney Docket Number: 236312-1	Application Number (if known): 12/474,261	Filing date: 05-28-2009
First Named Inventor: Peggy Lynn Baehmann		
Title: METHOD FOR ASSEMBLING JOINTED WIND TURBINE BLADE		

APPLICANT HEREBY REQUESTS TO PARTICIPATE IN THE GREEN TECHNOLOGY PILOT PROGRAM FOR THE ABOVE-IDENTIFIED APPLICATION. See Instruction Sheet on page 2.

This petition must be timely filed electronically using the USPTO electronic filing system, EFS-Web.

1. By filing this petition:

   Applicant is requesting early publication: Applicant hereby requests early publication under 37 CFR 1.219 and the publication fee set forth in 37 CFR 1.18(d) accompanies this request.

2. By filing this petition: applicant is agreeing to make an election without traverse in a telephonic interview and elect an invention that meets the eligibility requirements for the Green Technology Pilot Program, if the Office determines that the claims are not obviously directed to a single invention. See Instruction Sheet.

3. This request is accompanied by statements of special status for the eligibility requirement.

4. The application contains no more than three (3) independent claims and twenty (20) total claims.

5. The application does not contain any multiple dependent claims.

6. Other attachments: Statement Concerning the Basis for the Special Status

Signature /Douglas D. Zhang/	Date December 9, 2010
Name (Print/Typed) Douglas D. Zhang	Registration Number 37,985

Note: *Signatures of all the inventors or assignees of record of the entire interest or their representative(s) are required in accordance with 37 CFR 1.33 and 11.18. Please see 37 CFR 1.4(d) for the form of the signature. If necessary, submit multiple forms for more than one signature see below*.*

☐ *Total of ..... forms are submitted.

The information is required to obtain or retain a benefit by the public which is to file (and by the USPTO to process) an application. Confidentiality is governed by 35 U.S.C. 122 and 37 CFR 1.11 and 1.14. This collection is estimated to take 12 hours to complete, including gathering, preparing, and submitting the completed application form to the USPTO. Time will vary depending upon the individual case. Any comments on the amount of time you require to complete this form and/or suggestions for reducing this burden, should be sent to the Chief Information Officer, U.S. Patent and Trademark Office, U.S. Department of Commerce, P.O. Box 1450, Alexandria, VA 22313-1450. DO NOT SEND FEES OR COMPLETED FORMS TO THIS ADDRESS. **SEND TO: Commissioner for Patents, P.O. Box 1450, Alexandria, VA 22313-1450.**

If you need assistance in completing the form, call 1-800-PTO-9199 and select option 2.

UNITED STATES PATENT AND TRADEMARK OFFICE

UNITED STATES DEPARTMENT OF COMMERCE
United States Patent and Trademark Office
Address: COMMISSIONER FOR PATENTS
P.O. Box 1450
Alexandria, Virginia 22313-1450
www.uspto.gov

APPLICATION NO.	FILING DATE	FIRST NAMED INVENTOR	ATTORNEY DOCKET NO.	CONFIRMATION NO.
12/474,261	05/28/2009	Peggy Lynn Bachmann	236312-1	1186

6147 7590 01/12/2011
GENERAL ELECTRIC COMPANY
GLOBAL RESEARCH
ONE RESEARCH CIRCLE
BLDG. K1-3A59
NISKAYUNA, NY 12309

EXAMINER
SLAWSKI, BRIAN R

ART UNIT	PAPER NUMBER
1745	

NOTIFICATION DATE	DELIVERY MODE
01/12/2011	ELECTRONIC

Please find below and/or attached an Office communication concerning this application or proceeding.

The time period for reply, if any, is set in the attached communication.

Notice of the Office communication was sent electronically on above-indicated "Notification Date" to the following e-mail address(es):

ldocket@crd.ge.com
rosssr@ge.com
gpodckt.mail@ge.com

UNITED STATES PATENT AND TRADEMARK OFFICE

Commissioner for Patents
United States Patent and Trademark Office
P.O. Box 1450
Alexandria, VA 22313-1450
www.uspto.gov

GENERAL ELECTRIC COMPANY
GLOBAL RESEARCH
ONE RESEARCH CIRCLE
BLDG. K1-3A59
NISKAYUNA NY 12309

JAN 12 2011

In re Application of	:	
Baehmann et al.	:	DECISION ON PETITION
Application No. 12/474,261	:	TO MAKE SPECIAL UNDER
Filed: 5/28/2009	:	THE GREEN TECHNOLOGY
Attorney Docket No. **236312-1**	:	PILOT PROGRAM

This is a decision on the petition under 37 CFR 1.102, filed 12/13/2010, to make the above-identified application special under the pilot program for applications pertaining to Green Technologies as set forth in 74 Federal Register Notice 64666 (December 8, 2009) and amended by 75 Federal Register Notice 28554 (May 21, 2010) and 75 Federal Register Notice 69049 (November 10, 2010).

The petition is **GRANTED**.

A grantable petition to make an application special under 37 CFR 1.102 and the pilot program as set forth in 74 FR 64666 must be directed to a nonprovisional application filed under 35 USC 111(a) or be a national stage entry under 35 USC 371, exclusive of any reissue applications.

In order to qualify for special status, the following requirements must be met. 1) The application must have no more than 3 independent claims and no more than 20 total claims. 2) The application must not contain any multiple dependent claims. 3) The petition must state the basis for seeking special status, i.e., the claimed invention either: A) materially enhances the quality of the environment or B) materially contributes to: i) the discovery or development of renewable energy resources, ii) the more efficient utilization and conservation of energy resources, or iii) greenhouse gas emission reduction. 4) If the disclosure is not clear on its face that the claimed invention materially contributes under category (A) or (B), the petition must be accompanied by a statement by the applicant, assignee, or an attorney/agent registered to practice before the Office explaining how the materiality standard is met. 5) A statement that applicant will agree to make an election without traverse in a telephonic interview if a restriction requirement is made by the examiner. 6) The petition to make special must be filed electronically. 7) The petition must be filed at least one day prior to the date that a first Office Action appears in the Patent Application Information Retrieval (PAIR) system. 8) The petition must be accompanied by a

request for early publication in compliance with 37 CFR 1.219 and include the publication fee as set forth in 37 CFR 1.18(d).

The requirement for a fee for consideration of the petition to make special for applications pertaining to Green Technologies has been waived.

The instant petition complies with items 1 – 8 above. Accordingly, the above-identified application has been accorded "special" status.

Telephone inquires concerning this decision should be directed to Tom Dunn at 571-272-1171.

The application is being forwarded to the Technology Center Art Unit 1745 for action on the merits commensurate with this decision.

/Tom Dunn/

Tom Dunn
Quality Assurance Specialist
Technology Center 1700

UNITED STATES PATENT AND TRADEMARK OFFICE

Commissioner for Patents
United States Patent and Trademark Office
P.O. Box 1450
Alexandria, VA 22313-1450
www.uspto.gov

Decision Date April 18, 2012

In re Application of Theodora Retsina

Application No. 12474267

Filed: 28-May-2009

Attorney Docket No. 0020

DECISION ON PETITION

UNDER CFR 1.137(b)

This is an electronic decision on the petition under 37 CFR 1.137(b), April 18, 2012 , to revive the above-identified application.

The petition is **GRANTED**.

The above-identified application became abandoned for failure to reply in a timely manner to the outstanding Office communication. The date of abandonment is the day after the last day of the period set for reply in the Office action plus any applicable extensions of time properly requested.

The electronic petition satisfies the conditions for revival pursuant to the provisions of 37 CFR 1.137(b) in that (1) the reply in the form of aresponse; (2) the petition fee as set forth in 37 CFR 1.17 (m); and (3) the required statement of unintentional delay have been received. Accordingly, the response is accepted as having been unintentionally delayed.

Telephone inquiries concerning this decision should be directed to the Patent Electronic Business Center (EBC) at 866-217-9197.

This application file is being directed to the Technology Center.

Office of Petitions

Doc Code: PET.AUTO Document Description: Petition automatically granted by EFS-Web	PTO/SB/64 U.S. Patent and Trademark Office Department of Commerce

Electronic Petition Request	**PETITION FOR REVIVAL OF AN APPLICATION FOR PATENT ABANDONED UNINTENTIONALLY UNDER 37 CFR 1.137(b)**
Application Number	12474267
Filing Date	28-May-2009
First Named Inventor	Theodora Retsina
Attorney Docket Number	0020
Title	PROCESS FOR OBTAINING BIOCHEMICALS IN A ZERO-LIQUID DISCHARGE PLANT

The above-identified application became abandoned for failure to file a timely and proper reply to a notice or action by the United States Patent and Trademark Office. The date of abandonment is the day after the expiration date of the period set for reply in the office notice or action plus any extensions of time actually obtained.

APPLICANT HEREBY PETITIONS FOR REVIVAL OF THIS APPLICATION

NOTE: A grantable petition requires the following items:
(1) Petition fee;
(2) Reply and/or issue fee;
(3) Terminal disclaimer with disclaimer fee - required for all utility and plant applications filed before June 8, 1995; and for all design applications; and
(4) Statement that the entire delay was unintentional

Petition Fee

- ○ Applicant claims SMALL ENTITY status. See 37 CFR 1.27.
- ○ Applicant is no longer claiming SMALL ENTITY status. See 37 CFR 1.27(g)(2).
- ◉ Applicant(s) status remains as SMALL ENTITY.
- ○ Applicant(s) status remains as other than SMALL ENTITY.

2. Reply and/or fee

- ○ I certify, in accordance with 37 CFR 1.4(d)(4) that the amendment and response have already been filed in the above-identified application on
- ◉ Amendment and response are attached

RCE request,submission, and fee.

- ○ I certify, in accordance with 37 CFR 1.4(d)(4) that the RCE Request, Submission, and Fee have already been filed in the above-identified application on
- ○ RCE Request, Submission, and Fee are attached

Notice of Appeal

○ I certify, in accordance with 37 CFR 1.4(d)(4) that the Notice of Appeal and Fee have already been filed in the above-identified application on

○ Notice of Appeal and Fee are attached

3. Terminal Disclaimer is not required, since the Electronic Petition format is not support for Design applications and applications filed before June 8, 1995. Please file using regular petition format for review by the Office of Petitions.

☒ STATEMENT: The entire delay in filing the required reply from the due date for the required reply until the filing of a grantable petition under 37 CFR 1.137(b) was unintentional.

THIS PORTION MUST BE COMPLETED BY THE SIGNATORY OR SIGNATORIES

I certify, in accordance with 37 CFR 1.4(d)(4) that I am:

◉ An attorney or agent registered to practice before the Patent and Trademark Office who has been given power of attorney in this application.

○ An attorney or agent registered to practice before the Patent and Trademark Office, acting in a representative capacity.

○ A sole inventor

○ A joint inventor; I certify that I am authorized to sign this submission on behalf of all of the inventors

○ A joint inventor; all of whom are signing this e-petition

○ The assignee of record of the entire interest that has properly made itself of record pursuant to 37 CFR 3.71

Signature	/Ryan P. O'Connor/
Name	Ryan P. O'Connor
Registration Number	56693

UNITED STATES PATENT AND TRADEMARK OFFICE

Commissioner for Patents
United States Patent and Trademark Office
P.O. Box 1450
Alexandria, VA 22313-1450
www.uspto.gov

MAILED
FEB 09 2012
OFFICE OF PETITIONS

SUGHRUE-265550
2100 PENNSYLVANIA AVE. NW
WASHINGTON, DC 20037-3213

In re Application of	:	
Hiroshi Noro, et al.	:	
Application No. 12/474,416	:	DECISION GRANTING PETITION
Filed: March 29, 2009	:	UNDER 37 CFR 1.313(c)(2)
Attorney Docket No. Q113594	:	

This is a decision on the petition under 37 CFR 1.313(c)(2), filed February 2, 2012, to withdraw the above-identified application from issue after payment of the issue fee.

The petition is **GRANTED**.

The above-identified application is withdrawn from issue for consideration of a submission under 37 CFR 1.114 (request for continued examination). *See* 37 CFR 1.313(c)(2).

Petitioner is advised that the issue fee paid on January 3, 2012 cannot be refunded. If, however, this application is again allowed, petitioner may request that it be applied towards the issue fee required by the new Notice of Allowance.[1]

Telephone inquiries regarding this decision should be directed to undersigned at (571) 272-1642. All other inquiries concerning the examination or status of this application should be directed to the Technology Center.

This application is being referred to Technology Center AU 1765 for processing of the request for continued examination under 37 CFR 1.114 and for consideration of the concurrently filed information disclosure statement.

/AMW/
April M. Wise
Petitions Examiner
Office of Petitions

[1] *The request to apply the issue fee to the new Notice may be satisfied by completing and returning the new Part B – Fee(s) Transmittal Form (along with any balance due at the time of submission). Petitioner is advised that the Issue Fee Transmittal Form must be completed and timely submitted to avoid abandonment of the application.*

UNITED STATES PATENT AND TRADEMARK OFFICE

Commissioner for Patents
United States Patent and Trademark Office
P.O. Box 1450
Alexandria, VA 22313-1450
www.uspto.gov

ROCHE DIAGNOSTICS OPERATIONS INC.
9115 Hague Road
Indianapolis IN 46250-0457

MAILED

NOV 09 2010

OFFICE OF PETITIONS

In re Application of :
Hoelke, et al. :
Application No. 12/474,488 : ON PETITION
Filed: May 29, 2009 :
Attorney Docket No. 24947 US-as :

This is a decision on the petition under 37 CFR 1.137(b), filed September 13, 2010, to revive the above-identified application.

The petition is **GRANTED**.

The application became abandoned on February 6, 2010, for failure to respond to the Notice to File Corrected Application Papers mailed January 5, 2010.

The petition satisfies the requirements of 37 CFR 1.137(b) in that petitioner has supplied (1) the reply in the form of a replacement drawing sheet; (2) the petition fee of $1620.00, and (3) an adequate statement of unintentional delay.

Telephone inquiries concerning this decision should be directed to the undersigned at (571) 272-3222.

The application file is being directed to the Office of Patent Application Processing further processing.

/Kenya A. McLaughlin/

Kenya A. McLaughlin
Petitions Attorney
Office of Petitions

UNITED STATES PATENT AND TRADEMARK OFFICE

Commissioner for Patents
United States Patent and Trademark Office
P.O. Box 1450
Alexandria, VA 22313-1450
www.uspto.gov

MAILED
NOV 22 2011
OFFICE OF PETITIONS

WOOD, HERRON & EVANS, LLP (NORDSON)
2700 CAREW TOWER
441 VINE STREET
CINCINNATI OH 45202

In re Application of	:	
Pappalardo	:	
Application No. 12/474,494	:	ON PETITION
Filed: May 29, 2009	:	
Attorney Docket No. **NOR-1372US**		

This is in response to the "Amendment under 37 CFR 1.312", filed September 30, 2011, which is being treated as a petition under 37 CFR 1.182 to change the name of the sole inventor cited on this application in USPTO records.

The petition is granted.

The name of the sole inventor for the above-cited application is changed to "Matthew W. Pappalardo."

A corrected filing receipt is enclosed.

Deposit account 23-3000 will be charged $400.00 for the instant petition fee.

The application file is being directed to the Office of Data Management to await further processing.

Telephone inquiries concerning this matter may be directed to the undersigned at (571) 272-3222.

/Kenya A. McLaughlin/

Kenya A. McLaughlin
Petitions Attorney
Office of Petitions

Enclosure: Corrected Filing Receipt

UNITED STATES PATENT AND TRADEMARK OFFICE

UNITED STATES DEPARTMENT OF COMMERCE
United States Patent and Trademark Office
Address: COMMISSIONER FOR PATENTS
P.O. Box 1450
Alexandria, Virginia 22313-1450
www.uspto.gov

APPLICATION NUMBER	FILING or 371(c) DATE	GRP ART UNIT	FIL FEE REC'D	ATTY.DOCKET.NO	TOT CLAIMS	IND CLAIMS
12/474,494	05/29/2009	1774	1194	NOR-1372US	22	2

CONFIRMATION NO. 1672

CORRECTED FILING RECEIPT

37172
WOOD, HERRON & EVANS, LLP (NORDSON)
2700 CAREW TOWER
441 VINE STREET
CINCINNATI, OH 45202

OC000000050994975

Date Mailed: 11/17/2011

Receipt is acknowledged of this non-provisional patent application. The application will be taken up for examination in due course. Applicant will be notified as to the results of the examination. Any correspondence concerning the application must include the following identification information: the U.S. APPLICATION NUMBER, FILING DATE, NAME OF APPLICANT, and TITLE OF INVENTION. Fees transmitted by check or draft are subject to collection. Please verify the accuracy of the data presented on this receipt. **If an error is noted on this Filing Receipt, please submit a written request for a Filing Receipt Correction. Please provide a copy of this Filing Receipt with the changes noted thereon. If you received a "Notice to File Missing Parts" for this application, please submit any corrections to this Filing Receipt with your reply to the Notice. When the USPTO processes the reply to the Notice, the USPTO will generate another Filing Receipt incorporating the requested corrections**

Applicant(s)
Matthew E. Pappalardo, Ewing, NJ;

Assignment For Published Patent Application
NORDSON CORPORATION, Westlake, OH

Power of Attorney: The patent practitioners associated with Customer Number 37172

Domestic Priority data as claimed by applicant
This appln claims benefit of 61/061,424 06/13/2008

Foreign Applications (You may be eligible to benefit from the **Patent Prosecution Highway** program at the USPTO. Please see http://www.uspto.gov for more information.)

Permission to Access - A proper **Authorization to Permit Access to Application by Participating Offices** (PTO/SB/39 or its equivalent) has been received by the USPTO.

If Required, Foreign Filing License Granted: 06/08/2009

The country code and number of your priority application, to be used for filing abroad under the Paris Convention, is **US 12/474,494**

Projected Publication Date: Not Applicable

Non-Publication Request: No

Early Publication Request: No

Title

STATIC MIXER

Preliminary Class

366

PROTECTING YOUR INVENTION OUTSIDE THE UNITED STATES

Since the rights granted by a U.S. patent extend only throughout the territory of the United States and have no effect in a foreign country, an inventor who wishes patent protection in another country must apply for a patent in a specific country or in regional patent offices. Applicants may wish to consider the filing of an international application under the Patent Cooperation Treaty (PCT). An international (PCT) application generally has the same effect as a regular national patent application in each PCT-member country. The PCT process **simplifies** the filing of patent applications on the same invention in member countries, but **does not result** in a grant of "an international patent" and does not eliminate the need of applicants to file additional documents and fees in countries where patent protection is desired.

Almost every country has its own patent law, and a person desiring a patent in a particular country must make an application for patent in that country in accordance with its particular laws. Since the laws of many countries differ in various respects from the patent law of the United States, applicants are advised to seek guidance from specific foreign countries to ensure that patent rights are not lost prematurely.

Applicants also are advised that in the case of inventions made in the United States, the Director of the USPTO must issue a license before applicants can apply for a patent in a foreign country. The filing of a U.S. patent application serves as a request for a foreign filing license. The application's filing receipt contains further information and guidance as to the status of applicant's license for foreign filing.

Applicants may wish to consult the USPTO booklet, "General Information Concerning Patents" (specifically, the section entitled "Treaties and Foreign Patents") for more information on timeframes and deadlines for filing foreign patent applications. The guide is available either by contacting the USPTO Contact Center at 800-786-9199, or it can be viewed on the USPTO website at http://www.uspto.gov/web/offices/pac/doc/general/index.html.

For information on preventing theft of your intellectual property (patents, trademarks and copyrights), you may wish to consult the U.S. Government website, http://www.stopfakes.gov. Part of a Department of Commerce initiative, this website includes self-help "toolkits" giving innovators guidance on how to protect intellectual property in specific countries such as China, Korea and Mexico. For questions regarding patent enforcement issues, applicants may call the U.S. Government hotline at 1-866-999-HALT (1-866-999-4158).

LICENSE FOR FOREIGN FILING UNDER

Title 35, United States Code, Section 184

Title 37, Code of Federal Regulations, 5.11 & 5.15

GRANTED

The applicant has been granted a license under 35 U.S.C. 184, if the phrase "IF REQUIRED, FOREIGN FILING LICENSE GRANTED" followed by a date appears on this form. Such licenses are issued in all applications where the conditions for issuance of a license have been met, regardless of whether or not a license may be required as

set forth in 37 CFR 5.15. The scope and limitations of this license are set forth in 37 CFR 5.15(a) unless an earlier license has been issued under 37 CFR 5.15(b). The license is subject to revocation upon written notification. The date indicated is the effective date of the license, unless an earlier license of similar scope has been granted under 37 CFR 5.13 or 5.14.

This license is to be retained by the licensee and may be used at any time on or after the effective date thereof unless it is revoked. This license is automatically transferred to any related applications(s) filed under 37 CFR 1.53(d). This license is not retroactive.

The grant of a license does not in any way lessen the responsibility of a licensee for the security of the subject matter as imposed by any Government contract or the provisions of existing laws relating to espionage and the national security or the export of technical data. Licensees should apprise themselves of current regulations especially with respect to certain countries, of other agencies, particularly the Office of Defense Trade Controls, Department of State (with respect to Arms, Munitions and Implements of War (22 CFR 121-128)); the Bureau of Industry and Security, Department of Commerce (15 CFR parts 730-774); the Office of Foreign AssetsControl, Department of Treasury (31 CFR Parts 500+) and the Department of Energy.

NOT GRANTED

No license under 35 U.S.C. 184 has been granted at this time, if the phrase "IF REQUIRED, FOREIGN FILING LICENSE GRANTED" DOES NOT appear on this form. Applicant may still petition for a license under 37 CFR 5.12, if a license is desired before the expiration of 6 months from the filing date of the application. If 6 months has lapsed from the filing date of this application and the licensee has not received any indication of a secrecy order under 35 U.S.C. 181, the licensee may foreign file the application pursuant to 37 CFR 5.15(b).

SelectUSA

The United States represents the largest, most dynamic marketplace in the world and is an unparalleled location for business investment, innovation and commercialization of new technologies. The USA offers tremendous resources and advantages for those who invest and manufacture goods here. Through SelectUSA, our nation works to encourage, facilitate, and accelerate business investment. To learn more about why the USA is the best country in the world to develop technology, manufacture products, and grow your business, visit SelectUSA.gov.

UNITED STATES PATENT AND TRADEMARK OFFICE

Commissioner for Patents
United States Patent and Trademark Office
P.O. Box 1450
Alexandria, VA 22313-1450
www.uspto.gov

In re Application of
Donald James Long

Application No. 12474510

Filed: May 29,2009

Attorney Docket No. LNG-001

:DECISION ON PETITION TO MAKE SPECIAL
:UNDER 37 CFR 1.102(c)(1)

This is a decision on the electronic petition under 37 CFR 1.102 (c)(1), filed 10-JAN-2011 to make the above-identified application special based on applicant's age as set forth in MPEP § 708.02, Section IV.

The petition is **GRANTED**.

A grantable petition to make an application special under 37 CFR 1.102(c)(1), MPEP § 708.02, Section IV: Applicant's Age must include a statement by applicant or a registered practitioner having evidence that applicant is at least 65 years of age. No fee is required.

Accordingly, the above-identified application has been accorded "special" status and will be taken up for action by the examiner upon the completion of all pre-examination processing.

Telephone inquiries concerning this electronic decision should be directed to the Electronic Business Center at 866-217-9197.

All other inquiries concerning either the examination or status of the application should be directed to the Technology Center.

UNITED STATES PATENT AND TRADEMARK OFFICE

Commissioner for Patents
United States Patent and Trademark Office
P.O. Box 1450
Alexandria, VA 22313-1450
www.uspto.gov

Decision Date : September 19,2011

In re Application of :

Jorge Garcia

DECISION ON PETITION

UNDER CFR 1.313(c)(2)

Application No : 12474528

Filed : 29-May-2009

Attorney Docket No : 082506

This is an electronic decision on the petition under 37 CFR 1.313(c)(2), filed September 19,201,1to withdraw the above-identified application from issue after payment of the issue fee.

The petition is **GRANTED.**

The above-identified application is withdrawn from issue for consideration of a submission under 37 CFR 1.114 (request for continued examination). See 37 CFR 1.313(c)(2).

Petitioner is advised that the issue fee paid in this application cannot be refunded. If, however, this application is again allowed, petitioner may request that it be applied towards the issue fee required by the new Notice of Allowance.

Telephone inquiries concerning this decision should be directed to the Patent Electronic Business Center (EBC) at 866-217-9197.

This application file is being referred to Technology Center AU 2817 for processing of the request for continuing examination under 37 CFR 1.114 .

Office of Petitions

Doc Code: PET.AUTO Document Description: Petition automatically granted by EFS-Web	PTO/SB/140 U.S. Patent and Trademark Office Department of Commerce

Electronic Petition Request	**PETITION TO WITHDRAW AN APPLICATION FROM ISSUE AFTER PAYMENT OF THE ISSUE FEE UNDER 37 CFR 1.313(c)**
Application Number	12474528
Filing Date	29-May-2009
First Named Inventor	Jorge Garcia
Art Unit	2817
Examiner Name	LEVI GANNON
Attorney Docket Number	082506
Title	SYSTEM AND METHOD FOR EFFICIENTLY GENERATING AN OSCILLATING SIGNAL

An application may be withdrawn from issue for further action upon petition by the applicant. To request that the Office withdraw an application from issue, applicant must file a petition under this section including the fee set forth in § 1.17(h) and a showing of good and sufficient reasons why withdrawal of the application from issue is necessary.

APPLICANT HEREBY PETITIONS TO WITHDRAW THIS APPLICATION FROM ISSUE UNDER 37 CFR 1.313(c).

A grantable petition requires the following items:
(1) Petition fee; and
(2) One of the following reasons:
(a) Unpatentability of one or more claims, which must be accompanied by an unequivocal statement that one or more claims are unpatentable, an amendment to such claim or claims, and an explanation as to how the amendment causes such claim or claims to be patentable;
(b) Consideration of a request for continued examination in compliance with § 1.114 (for a utility or plant application only); or
(c) Express abandonment of the application. Such express abandonment may be in favor of a continuing application, but not a CPA under 37 CFR 1.53(d).

Petition Fee

☐ Applicant claims SMALL ENTITY status. See 37 CFR 1.27.

☐ Applicant is no longer claiming SMALL ENTITY status. See 37 CFR 1.27(g)(2).

☐ Applicant(s) status remains as SMALL ENTITY.

☒ Applicant(s) status remains as other than SMALL ENTITY

Reason for withdrawal from issue

○ One or more claims are unpatentable

◉ Consideration of a request for continued examination (RCE) (List of Required Documents and Fees)

○ Applicant hereby expressly abandons the instant application (any attorney/agent signing for this reason must have power of attorney pursuant to 37 CFR 1.32(b)).

RCE request,submission, and fee.

☐ I certify, in accordance with 37 CFR 1.4(d)(4) that : The RCE request ,submission, and fee have already been filed in the above-identified application on

☒ Are attached.

THIS PORTION MUST BE COMPLETED BY THE SIGNATORY OR SIGNATORIES

I certify, in accordance with 37 CFR 1.4(d)(4) that I am:

◉ An attorney or agent registered to practice before the Patent and Trademark Office who has been given power of attorney in this application.

○ An attorney or agent registered to practice before the Patent and Trademark Office, acting in a representative capacity.

○ A sole inventor

○ A joint inventor; I certify that I am authorized to sign this submission on behalf of all of the inventors

○ A joint inventor; all of whom are signing this e-petition

○ The assignee of record of the entire interest that has properly made itself of record pursuant to 37 CFR 3.71

Signature	/Dang M. Vo/
Name	Dang M. Vo
Registration Number	45183

SPE RESPONSE FOR CERTIFICATE OF CORRECTION

Paper No.:1110

DATE : October 19, 2011

TO SPE OF : ART UNIT 2833

SUBJECT : Request for Certificate of Correction on Patent No.: 7963812

A response is requested with respect to the accompanying request for a certificate of correction.

Please complete this form and return with file, within **7** days to:
Certificates of Correction Branch - ST (South Tower) 9A22
Palm location **7590** - Tel. No. (703) 305-8309

With respect to the change(s) requested, correcting Office and/or Applicant's errors, should the patent read as shown in the certificate of correction? No new matter should be introduced, nor should the scope or meaning of the claims be changed.

Thank You For Your Assistance **Certificates of Correction Branch**

The request for issuing the above-identified correction(s) is hereby:

Note your decision on the appropriated box.

☒ **Approved** All changes apply.

☐ **Approved in Part** Specify below which changes **do not** apply.

☐ **Denied** State the reasons for denial below.

Comments:

Changes are approved. BUT, errors were made by applicant. Please charge appropriate fees to Applicant's deposit account.

/renee s luebke/
SPE - AU 2833

SPE RESPONSE FOR CERTIFICATE OF CORRECTION

Comments:

UNITED STATES PATENT AND TRADEMARK OFFICE

Commissioner for Patents
United States Patent and Trademark Office
P.O. Box 1450
Alexandria, VA 22313-1450
www.uspto.gov

KILPATRICK TOWNSEND & STOCKTON LLP
TWO EMBARCADERO CENTER
EIGHTH FLOOR
SAN FRANCISCO, CA 94111-3834

MAILED
JUN 10 2011
OFFICE OF PETITIONS

In re Application of Tilson et al. Application No. 12/474,652 Filed: May 29, 2009 Attorney Docket No. 022176-003311US	: : : : :	DECISION ON PETITION TO WITHDRAW FROM RECORD

This is a decision on the Request to Withdraw as attorney or agent of record under 37 C.F.R. § 1.36(b), filed April 29, 2011.

The request is **NOT APPROVED** because it is moot.

A review of the file record indicates that on May 18, 2011 the power of attorney to Kilpatrick Townsend & Stockton LLP was revoked by the assignee of the patent application. Accordingly, the request to withdraw under 37 C.F.R. § 1.36(b) is moot.

All future communications from the Office will be directed to the below-listed address until otherwise notified by applicant.

Telephone inquires concerning this decision should be directed to the undersigned at 571-272- 7751. All other inquires concerning either the examination or status of the application should be directed to the Technology Center.

/Joan Olszewski/
Joan Olszewski
Petitions Examiner
Office of Petitions

cc: HENRICKS SLAVIN AND HOLMES, LLP
ADVANCED BIONICS CORPORATION
840 APOLLO STREET
SUITE 200
EL SEGUNDO CA 90245

UNITED STATES PATENT AND TRADEMARK OFFICE

Commissioner for Patents
United States Patent and Trademark Office
P.O. Box 1450
Alexandria, VA 22313-1450
www.uspto.gov

POSZ LAW GROUP, PLC
12040 SOUTH LAKES DRIVE
SUITE 101
RESTON, VA 20191

MAILED
JUL 01 2011
OFFICE OF PETITIONS

In re Application of	:
Eugene M. Lee	:
Application No. 12/474,728	: DECISION ON PETITION
Filed: May 29, 2009	: UNDER 37 CFR 1.78(a)(3)
Attorney Docket No.: 113708.121-DIV1	:

This is a decision on the petition under 37 CFR 1.78(a)(3), filed June 15, 2011, to accept an unintentionally delayed claim under 35 U.S.C. § 120 for the benefit of priority to the prior-filed nonprovisional applications set forth in the amendment filed with the petition.

The petition is **DISMISSED**.

A petition for acceptance of a claim for late priority under 37 CFR 1.78(a)(3) is only applicable to those applications filed on or after November 29, 2000. Further, the petition is appropriate only after the expiration of the period specified in 37 CFR 1.78(a)(2)(ii). In addition, the petition under 37 CFR 1.78(a)(3) must be accompanied by:

(1) the reference required by 35 U.S.C. § 120 and 37 CFR 1.78(a)(2)(i) and (iii) of the prior-filed application, unless previously submitted;
(2) the surcharge set forth in § 1.17(t); and
(3) a statement that the entire delay between the date the claim was due under 37 CFR 1.78(a)(2)(ii) and the date the claim was filed was unintentional. The Director may require additional information where there is a question whether the delay was unintentional.

The petition does not satisfy items (1) above.

In this regard, the reference to add the above-noted, prior-filed applications on page one following the first sentence of the specification is not acceptable as drafted since it improperly incorporates by reference the prior-filed applications. An incorporation by reference statement added after an application's filing date is not effective because no new matter can be added to an application after its filing date (*see* 35 U.S.C. § 132(a)). If an incorporation by reference statement is included in an

amendment to the specification to add a benefit claim under 35 U.S.C. § 120 after the filing date of the application, the amendment would not be proper. When a benefit claim under 35 U.S.C. § 120 is submitted after the filing of an application, the reference to the prior application cannot include an incorporation by reference statement of the prior application. *See* Dart Industries v. Banner, 636 F.2d 684, 207 USPQ 273 (C.A.D.C. 1980). *Note* MPEP §§ 201.06(c) and 608.04(b).

Before the petition under 37 CFR § 1.78(a)(3) can be granted, a renewed petition and either an Application Data Sheet or an amendment (complying with the provisions of 37 CFR 1.121 and 37 CFR 1.76(b)(5)) to correct the above matter is required.

Further correspondence with respect to this matter should be delivered through one of the following mediums:

By mail: Mail Stop PETITIONS
Commissioner for Patents
Post Office Box 1450
Alexandria, VA 22313-1450

By hand: Customer Service Window
Mail Stop Petitions
Randolph Building
401 Dulany Street
Alexandria, VA 22314

By fax: (571) 273-8300
ATTN: Office of Petitions

By Internet: EFS-Web[1]

Telephone inquiries concerning this decision should be directed to Sherry Brinkley at (571) 272-3204.

/SDB/

Sherry D. Brinkley
Petitions Examiner
Office of Petitions

[1] www.uspto.gov/ebc/efs_help.html (for help using EFS-Web call the Patent Electronic Business Center at (866) 217-9197)

UNITED STATES PATENT AND TRADEMARK OFFICE

Commissioner for Patents
United States Patent and Trademark Office
P.O. Box 1450
Alexandria, VA 22313-1450
www.uspto.gov

Decision Date : April 8,2011

In re Application of :

Naofumi KITAGAWA

DECISION ON PETITION

UNDER CFR 1.313(c)(2)

Application No : 12474734

Filed : 29-May-2009

Attorney Docket No : 062807-0593

This is an electronic decision on the petition under 37 CFR 1.313(c)(2), filed April 8,2011 , to withdraw the above-identified application from issue after payment of the issue fee.

The petition is **GRANTED.**

The above-identified application is withdrawn from issue for consideration of a submission under 37 CFR 1.114 (request for continued examination). See 37 CFR 1.313(c)(2).

Petitioner is advised that the issue fee paid in this application cannot be refunded. If, however, this application is again allowed, petitioner may request that it be applied towards the issue fee required by the new Notice of Allowance.

Telephone inquiries concerning this decision should be directed to the Patent Electronic Business Center (EBC) at 866-217-9197.

This application file is being referred to Technology Center AU 3653 for processing of the request for continuing examination under 37 CFR 1.114 .

Office of Petitions

Doc Code: PET.AUTO Document Description: Petition automatically granted by EFS-Web	PTO/SB/140 U.S. Patent and Trademark Office Department of Commerce

Electronic Petition Request	**PETITION TO WITHDRAW AN APPLICATION FROM ISSUE AFTER PAYMENT OF THE ISSUE FEE UNDER 37 CFR 1.313(c)**
Application Number	12474734
Filing Date	29-May-2009
First Named Inventor	Naofumi KITAGAWA
Art Unit	3653
Examiner Name	LUIS GONZALEZ
Attorney Docket Number	062807-0593
Title	PAPER STACKING APPARATUS

An application may be withdrawn from issue for further action upon petition by the applicant. To request that the Office withdraw an application from issue, applicant must file a petition under this section including the fee set forth in § 1.17(h) and a showing of good and sufficient reasons why withdrawal of the application from issue is necessary.

APPLICANT HEREBY PETITIONS TO WITHDRAW THIS APPLICATION FROM ISSUE UNDER 37 CFR 1.313(c).

A grantable petition requires the following items:
(1) Petition fee; and
(2) One of the following reasons:
(a) Unpatentability of one or more claims, which must be accompanied by an unequivocal statement that one or more claims are unpatentable, an amendment to such claim or claims, and an explanation as to how the amendment causes such claim or claims to be patentable;
(b) Consideration of a request for continued examination in compliance with § 1.114 (for a utility or plant application only); or
(c) Express abandonment of the application. Such express abandonment may be in favor of a continuing application, but not a CPA under 37 CFR 1.53(d).

Petition Fee

☐ Applicant claims SMALL ENTITY status. See 37 CFR 1.27.

☐ Applicant is no longer claiming SMALL ENTITY status. See 37 CFR 1.27(g)(2).

☐ Applicant(s) status remains as SMALL ENTITY.

☒ Applicant(s) status remains as other than SMALL ENTITY

Reason for withdrawal from issue

○ One or more claims are unpatentable

◉ Consideration of a request for continued examination (RCE) (List of Required Documents and Fees)

○ Applicant hereby expressly abandons the instant application (any attorney/agent signing for this reason must have power of attorney pursuant to 37 CFR 1.32(b)).

RCE request,submission, and fee.

☐ I certify, in accordance with 37 CFR 1.4(d)(4) that : The RCE request ,submission, and fee have already been filed in the above-identified application on

☒ Are attached.

THIS PORTION MUST BE COMPLETED BY THE SIGNATORY OR SIGNATORIES

I certify, in accordance with 37 CFR 1.4(d)(4) that I am:

◉ An attorney or agent registered to practice before the Patent and Trademark Office who has been given power of attorney in this application.

○ An attorney or agent registered to practice before the Patent and Trademark Office, acting in a representative capacity.

○ A sole inventor

○ A joint inventor; I certify that I am authorized to sign this submission on behalf of all of the inventors

○ A joint inventor; all of whom are signing this e-petition

○ The assignee of record of the entire interest that has properly made itself of record pursuant to 37 CFR 3.71

Signature	/Keith E. George/
Name	Keith E. George
Registration Number	34111

UNITED STATES PATENT AND TRADEMARK OFFICE

Commissioner for Patents
United States Patent and Trademark Office
P.O. Box 1450
Alexandria, VA 22313-1450
www.uspto.gov

Decision Date: April 8,2011

In re Application of:

Naofumi KITAGAWA

DECISION ON PETITION
UNDER CFR 1.313(c)(2)

Application No: 12474734

Filed: 29-May-2009

Attorney Docket No: 062807-0593

This is an electronic decision on the petition under 37 CFR 1.313(c)(2), filed April 8,2011 , to withdraw the above-identified application from issue after payment of the issue fee.

The petition is **GRANTED.**

The above-identified application is withdrawn from issue for consideration of a submission under 37 CFR 1.114 (request for continued examination). See 37 CFR 1.313(c)(2).

Petitioner is advised that the issue fee paid in this application cannot be refunded. If, however, this application is again allowed, petitioner may request that it be applied towards the issue fee required by the new Notice of Allowance.

Telephone inquiries concerning this decision should be directed to the Patent Electronic Business Center (EBC) at 866-217-9197.

This application file is being referred to Technology Center AU 3653 for processing of the request for continuing examination under 37 CFR 1.114.

Office of Petitions

PTO/SB/20PCT-KR (06-10)
Approved for use through 01/31/2012. OMB 0651-0058
U.S. Patent and Trademark Office; U. S. DEPARTMENT OF COMMERCE
Under the Paperwork Reduction Act of 1995, no persons are required to respond to a collection of information unless it displays a valid OMB control number.

REQUEST FOR PARTICIPATION IN THE PATENT COOPERATION TREATY - PATENT PROSECUTION HIGHWAY (PCT-PPH) PILOT PROGRAM BETWEEN THE KOREAN INTELLECTUAL PROPERTY OFFICE (KIPO) AND THE USPTO

Application No:	12/474,736-Conf. #2148	Filing date:	May 29, 2009
First Named Inventor:	Masao AKEI		
Title of the Invention:	COMPRESSOR HAVING CAPACITY MODULATION SYSTEM		

THIS REQUEST FOR PARTICIPATION IN THE PCT-PPH PILOT PROGRAM ALONG WITH THE REQUIRED DOCUMENTS MUST BE SUBMITTED VIA EFS-WEB. INFORMATION REGARDING EFS-WEB IS AVAILABLE AT HTTP://WWW.USPTO.GOV/EBC/EFS_HELP.HTML

APPLICANT HEREBY REQUESTS PARTICIPATION IN THE PCT-PPH PROGRAM AND PETITIONS TO MAKE THE ABOVE-IDENTIFIED APPLICATION SPECIAL UNDER THE PCT-PPH PROGRAM.

The above-identified application is (1) a national stage entry of the corresponding PCT application, or (2) a national stage entry of another PCT application which claims priority to the corresponding PCT application, or (3) a national application that claims domestic/ foreign priority to the corresponding PCT application, or (4) a national application which forms the basis for the priority claim in the corresponding PCT application, or (5) a continuing application of a U.S. application that satisfies one of (1) to (4) above, or (6) a U.S. application that claims domestic benefit to a U.S. provisional application which forms the basis for the priority claim in the corresponding PCT application.

The corresponding PCT application number(s) is/are: PCT/US2009/045666

The international date of the corresponding PCT application(s) is/are: May 29, 2009

I. List of Required Documents:

a. **A copy of the latest international work product (WO/ISA, WO/IPEA, or IPER) in the above–identified corresponding PCT application(s)**

☐ Is attached.

☒ Is not attached because the document is already in the U.S. application.

b. **A copy of all claims which were indicated as having novelty, inventive step and industrial applicability in the above-identified corresponding PCT application(s).**

☐ Is attached.

☒ Is not attached because the document is already in the U.S. application.

c. **English translations of the documents in a. and b. above are attached (if the documents are not in the English language). A statement that the English translation is accurate is attached for the document in b. above.**

This collection of information is required by 35 U.S.C. 119, 37 CFR 1.55, and 37 CFR 1.102(d). The information is required to obtain or retain a benefit by the public, which is to file (and by the USPTO to process) an application. Confidentiality is governed by 35 U.S.C. 122 and 37 CFR 1.11 and 1.14. This collection is estimated to take 2 hours to complete, including gathering, preparing, and submitting the completed application form to the USPTO. Time will vary depending upon the individual case. Any comments on the amount of time you require to complete this form and/or suggestions for reducing this burden should be sent to the Chief Information Officer, U.S. Patent and Trademark Office, U.S. Department of Commerce, P.O. Box 1450, Alexandria, VA 22313-1450. DO NOT SEND FEES OR COMPLETED FORMS TO THIS ADDRESS.

Approved for use through 01/31/2012. OMB 0651-0058
U.S.Patent and Trademark Office; U.S. DEPARTMENT OF COMMERCE
Under the Paperwork Reduction Act of 1995, no persons are required to respond to a collection of information unless it displays a valid OMB control number.

REQUEST FOR PARTICIPATION IN THE PCT-PPH PILOT PROGRAM BETWEEN THE KIPO AND THE USPTO

(continued)

Application No.:	12/474,736-Conf. #2148
First Named Inventor:	Masao AKEI

d. **(1) An information disclosure statement listing the documents cited in the international work products (ISR, WO/ISA, WO/IPEA, IPER) of the corresponding PCT application.**

☐ Is attached

☒ Has already been filed in the above-identified U.S. application on Jan. 20, 2010

(2) Copies of all documents (except) for U.S. patents or U.S. patent application publications)

☐ Are attached.

Have already been filed in the above-identified U.S. application on Jan. 20, 2010

II. Claims Correspondence Table:

Claims in US Application	Patentable Claims in the corresponding PCT Application	Explanation regarding the correspondence
1-24	1-24	The U.S. Claims and the PCT Claims are identical

III. All the claims in the US application sufficiently correspond to the patentable claims in the corresponding PCT application.

Signature /MichaelMalinzak/	Date February 7, 2011
Name (Print/Typed) Michael Malinzak	Registration Number 43,770

Privacy Act Statement

The **Privacy Act of 1974 (P.L. 93-579)** requires that you be given certain information in connection with your submission of the attached form related to a patent application or patent. Accordingly, pursuant to the requirements of the Act, please be advised that: (1) the general authority for the collection of this information is 35 U.S.C. 2(b)(2); (2) furnishing of the information solicited is voluntary; and (3) the principal purpose for which the information is used by the U.S. Patent and Trademark Office is to process and/or examine your submission related to a patent application or patent. If you do not furnish the requested information, the U.S. Patent and Trademark Office may not be able to process and/or examine your submission, which may result in termination of proceedings or abandonment of the application or expiration of the patent.

The information provided by you in this form will be subject to the following routine uses:

1. The information on this form will be treated confidentially to the extent allowed under the Freedom of Information Act (5 U.S.C. 552) and the Privacy Act (5 U.S.C 552a). Records from this system of records may be disclosed to the Department of Justice to determine whether disclosure of these records is required by the Freedom of Information Act.
2. A record from this system of records may be disclosed, as a routine use, in the course of presenting evidence to a court, magistrate, or administrative tribunal, including disclosures to opposing counsel in the course of settlement negotiations.
3. A record in this system of records may be disclosed, as a routine use, to a Member of Congress submitting a request involving an individual, to whom the record pertains, when the individual has requested assistance from the Member with respect to the subject matter of the record.
4. A record in this system of records may be disclosed, as a routine use, to a contractor of the Agency having need for the information in order to perform a contract. Recipients of information shall be required to comply with the requirements of the Privacy Act of 1974, as amended, pursuant to 5 U.S.C. 552a(m).
5. A record related to an International Application filed under the Patent Cooperation Treaty in this system of records may be disclosed, as a routine use, to the International Bureau of the World Intellectual Property Organization, pursuant to the Patent Cooperation Treaty.
6. A record in this system of records may be disclosed, as a routine use, to another federal agency for purposes of National Security review (35 U.S.C. 181) and for review pursuant to the Atomic Energy Act (42 U.S.C. 218(c)).
7. A record from this system of records may be disclosed, as a routine use, to the Administrator, General Services, or his/her designee, during an inspection of records conducted by GSA as part of that agency's responsibility to recommend improvements in records management practices and programs, under authority of 44 U.S.C. 2904 and 2906. Such disclosure shall be made in accordance with the GSA regulations governing inspection of records for this purpose, and any other relevant (*i.e.*, GSA or Commerce) directive. Such disclosure shall not be used to make determinations about individuals.
8. A record from this system of records may be disclosed, as a routine use, to the public after either publication of the application pursuant to 35 U.S.C. 122(b) or issuance of a patent pursuant to 35 U.S.C. 151. Further, a record may be disclosed, subject to the limitations of 37 CFR 1.14, as a routine use, to the public if the record was filed in an application which became abandoned or in which the proceedings were terminated and which application is referenced by either a published application, an application open to public inspection or an issued patent.
9. A record from this system of records may be disclosed, as a routine use, to a Federal, State, or local law enforcement agency, if the USPTO becomes aware of a violation or potential violation of law or regulation.

UNITED STATES PATENT AND TRADEMARK OFFICE

UNITED STATES DEPARTMENT OF COMMERCE
United States Patent and Trademark Office
Address: COMMISSIONER FOR PATENTS
P.O. Box 1450
Alexandria, Virginia 22313-1450
www.uspto.gov

APPLICATION NO.	FILING DATE	FIRST NAMED INVENTOR	ATTORNEY DOCKET NO.	CONFIRMATION NO.
12/474,736	05/29/2009	Masao Akei	0315-000675/US	2148

27572 7590 02/09/2011
HARNESS, DICKEY & PIERCE, P.L.C.
P.O. BOX 828
BLOOMFIELD HILLS, MI 48303

EXAMINER
DAVIS, MARY ALICE

ART UNIT	PAPER NUMBER
3748	

MAIL DATE	DELIVERY MODE
02/09/2011	PAPER

Please find below and/or attached an Office communication concerning this application or proceeding.

The time period for reply, if any, is set in the attached communication.

UNITED STATES PATENT AND TRADEMARK OFFICE

Commissioner for Patents
United States Patent and Trademark Office
P.O. Box 1450
Alexandria, VA 22313-1450
www.uspto.gov

HARNESS, DICKEY & PIERCE, P.L.C.
P.O. BOX 828
BLOOMFIELD HILLS MI 48303

In re Application of	:	
AKEI, MASAO et al	:	DECISION ON REQUEST TO
Application No. 12/474,736	:	PARTICIPATE IN PATENT
Filed: May 29, 2009	:	PCT/PROSECUTION HIGHWAY
Attorney Docket No. 0315-000675-US	:	PROGRAM AND PETITION
Title: COMPRESSOR HAVING CAPACITY MODULATION SYSTEM	:	37 CFR 1.102(a)

This is a decision on the request to participate in the Patent Prosecution Highway (PPH) program and the petition under 37 CFR 1.102(a), filed Feb. 7, 2011, to make the above-identified application special.

The request and petition are granted.

A grantable request to participate in the PPH program and petition to make special require:
(1) The U.S. application must disclose an eligible relationship to one or more PCT applications filed in the KIPO, JPO, EPO or USPTO;
(2) Applicant must submit a copy of the allowable/patentable claim(s) from the PCT application(s) latest international work product (the written opinion or the IPER) along with an English translation thereof and a statement that the English translation is accurate;
(3) All the claims in the U.S. application must sufficiently correspond or be amended to sufficiently correspond to the allowable/patentable claim(s) in the PCT application(s);
(4) Examination of the U.S. application has not begun;
(5) Applicant must submit a copy of the latest international work product from the PCT application containing the allowable/patentable claim(s) along with an English translation thereof and a statement that the English translation is accurate; and
(6) Applicant must submit an IDS listing the documents cited by the PCT examiner in the international work product along with copies of documents except U.S. patents or U.S. patent application publications.

In light of the petition being properly submitted, the request to participate in the PPH program and the petition comply with the above requirements. Accordingly, the above-identified application has been accorded "special" status.

The applicant is encouraged to cite and submit all relevant prior art references, if any, to facilitate examination in this application.

Other inquiries concerning the examination or status of the application should be directed to Thomas Denion, the SPE of Art Unit 3748 at 571-272-4859 for Class 418/55 and also accessible in the PAIR system at http://www.uspto.gov/ebc.index.html.

All other inquiries concerning the examination or status of the application should be directed to the Patent Application Information Retrieval (PAIR) system.

This application will be forwarded and docketed to an examiner for action on the merits commensurate with this decision.

Telephone inquiries concerning this decision should be directed to Henry C. Yuen, at 571-272-4856.

The petition is **granted.**

/Henry C. Yuen/

Henry C. Yuen, Special Programs Examiner
Technology Center 3700 – Mechanical Engineering,
Manufacturing and Products
571-272-4856

UNITED STATES PATENT AND TRADEMARK OFFICE

Commissioner for Patents
United States Patent and Trademark Office
P.O. Box 1450
Alexandria, VA 22313-1450
www.uspto.gov
DIW Aug-11

MAILED
AUG 08 2011
OFFICE OF PETITIONS

EDWARDS ANGELL PALMER & DODGE LLP
P.O. BOX 55874
BOSTON MA 02205

In re Application of	:	
Abrahamson et al.	:	
Application Number: 12/474,816	:	ON PETITION
Filing Date: 05/29/2009	:	
Attorney Docket Number:	:	
85138CON2(71699)	:	

This is a decision in response to the petition under 37 CFR 1.137(b) filed on June 10, 2011, to revive the above-identified application.

The petition is **GRANTED**.

This application became abandoned on November 24, 2010, for failure to timely submit a reply to the non-final Office action mailed on August 23, 2010, which set a three (3) month shortened statutory period for reply. No extensions of the time for reply in accordance with 37 CFR 1.136(a) were obtained. Notice of Abandonment was mailed on March 11, 2011.

It is not apparent whether the person signing the statement of unintentional delay was in a position to have firsthand or direct knowledge of the facts and circumstances of the delay at issue. Nevertheless, such statement is being treated as having been made as the result of a reasonable inquiry into the facts and circumstances of such delay.[1] In the event that such an inquiry has not been made, petitioner must make such an inquiry. If such inquiry results in the discovery that it is not correct that the entire delay in filing the required reply from the due date for the reply until the filing of a grantable petition pursuant to 37 CFR 1.137(b) was unintentional, petitioner must notify the Office.

[1] See 37 CFR 10.18(b) and Changes to Patent Practice and Procedure; Final Rule Notice, 62 Fed. Reg. 53131, 53178 (October 10, 1997), 1208 Off. Gaz. Pat. Office 63, 103 (October 21, 1997).

Receipt of the reply filed on June 10, 2011 is acknowledged.

The application is being referred to Technology Center Art Unit 1644 for further processing.

Telephone inquiries concerning this matter may be directed to the undersigned at (571) 272-3231.

D Wood

Douglas I. Wood
Senior Petitions Attorney
Office of Petitions

SPE RESPONSE FOR CERTIFICATE OF CORRECTION

Paper No.:20120123

DATE : January 23, 2012

TO SPE OF : ART UNIT 2839

SUBJECT : Request for Certificate of Correction on Patent No.: 7,867,025

A response is requested with respect to the accompanying request for a certificate of correction.

Please complete this form and return with file, within **7** days to:
Certificates of Correction Branch - ST (South Tower) 9A22
Palm location **7590** - Tel. No. (703) 305-8309

With respect to the change(s) requested, correcting Office and/or Applicant's errors, should the patent read as shown in the certificate of correction? No new matter should be introduced, nor should the scope or meaning of the claims be changed.

Thank You For Your Assistance **Certificates of Correction Branch**

The request for issuing the above-identified correction(s) is hereby:

Note your decision on the appropriated box.

☒ **Approved** All changes apply.

☐ **Approved in Part** Specify below which changes **do not** apply.

☐ **Denied** State the reasons for denial below.

Comments:

The changes are approved.

/TULSIDAS C PATEL/
Supervisory Patent Examiner.Art Unit 2839

UNITED STATES PATENT AND TRADEMARK OFFICE

Commissioner for Patents
United States Patent and Trademark Office
P.O. Box 1450
Alexandria, VA 22313-1450
www.uspto.gov

PLUMSEA LAW GROUP, LLC
10411 MOTOR CITY DRIVE
SUITE 320
BETHESDA, MD 20817

MAILED

SEP 22 2011

OFFICE OF PETITIONS

Applicant: Avar, et al.
Appl. No.: 12/474,844
Filing Date: May 29, 2009
Title: ARTICLE OF FOOTWEAR WITH MULTI-DIRECTIONAL SOLE STRUCTURE
Attorney Docket No.: 51-1691
Pub. No.: US 2010/0299965 A1
Pub. Date: December 2, 2010

This is a decision on the request for a corrected patent application publication under 37 CFR 1.221(b), received on February 8, 2011, for the above-identified application

The request is DISMISSED.

Applicant requests that the application be republished because the patent application publication contains a material error on the front page of the application wherein the assignee's city of residence is incorrect.

37 CFR 1.221 (b) is applicable "only when the Office makes a material mistake which is apparent from Office records.... Any request for a corrected publication or revised patent application publication other than provided as provided in paragraph (a) of this section must be filed **within two months** from the date of the patent application publication. **This period is not extendable.**" A material mistake must affect the public's ability to appreciate the technical disclosure of the patent application publication, to determine the scope of the patent application publication, or to determine the scope of the provisional rights that an applicant may seek to enforce upon issuance of a patent. [1]

The request for corrected publication received on February 8, 2011, was not timely filed under 37 CFR 1.221(b).

The error noted by requestor wherein the assignee's city of residence "Beaverton" is incorrectly listed as "Beaveton" is not a material Office error under 37 CFR 1.221(b). The misprinting of the assignee's city of residence does not affect the understanding of the application. The error in assignment information is not a material mistake's because it does not affect the public's ability to appreciate the technical disclosure of the patent application publication, to determine the scope

[1] Changes to Implement Eighteen-Month Publication of Patent Applications, 65 FR 57023, 57038 (Sept. 20, 2000), 1239, Off. Gaz. Pat. Office Notices 63, 75 (Oct. 10, 2000) (final rule).

of the patent application publication or to determine the scope of the provisional rights that an applicant may seek to enforce upon issuance of a patent. Applicant should not file requests for corrected publication when a publication includes errors in the assignee's name or assignment information. See MPEP 1130.

Applicant is reminded of his duty to conduct a reasonable inquiry before filing a paper before the Office. See MPEP 410.

Applicants' request for a corrected patent application publication on December 9, 2010, may constitute a "failure to engage in reasonable efforts to conclude processing or examination of the application." See 1.704(c). This determination will be made on or after a mailing of a Notice of Allowance.

On November 23, 2009, a Filing Receipt was mailed by the Office, which incorrectly listed the assignee's city of residence. To avoid this type of problem in the future, applicant's representative should correct the error and make a request for a corrected filing receipt prior to export of the application to the publisher and publication of the application.

The application data sheet (ADS) submitted on January 21, 2009 does not comply with 37 CFR 1.76(c) for supplemental application data sheets.

Applicants are encouraged to use and submit an **eADS** (PTO/SB/14) as an EFS-Web Fillable Form, rather than a scanned PDF image, to benefit from having the data loaded directly into USPTO electronic systems. For questions contact the Patent EBC (Electronic Business Center):
Telephone: 1-866-217-9197 (toll-free) or E-mail: ebc@uspto.gov
571-272-4100 (local)

The applicant is advised that a "request for republication of an application previously published" may be filed under 37 CFR 1.221(a). Such a request for republication "must include a copy of the application compliance with the Office's electronic filing system requirements and be accompanied by the publication fee set forth in § 1.18(d) and the processing fee set forth in § 1.17(i)." If the request for republication does not comply with the electronic filing system requirements, the republication will not take place and the publication fee set forth in § 1.18(d) will be refunded. The processing fee will be retained.

A guide for filing a request for a Pre-Grant Publication, such as a request for republication, may be found on the link below:

http://www.uspto.gov/patents/process/file/efs/guidance/index.jsp

http://www.uspto.gov/ebc/portal/efs/pgpub_quickstart.pdf

Any request for republication under 37 CFR 1.221(a), must be submitted via the EFS system, as a "Pre-Grant Publication"

Inquiries relating to this matter may be directed to Mark Polutta at (571) 272-7709.

Mark Polutta
Senior Legal Advisor
Office of Patent Legal Administration
Office of the Deputy Commissioner
for Patent Examination Policy

PTO/SB/20PCT-KR (06-10)
Approved for use through 01/31/2012. OMB 0651-0058
U.S. Patent and Trademark Office; U. S. DEPARTMENT OF COMMERCE
Under the Paperwork Reduction Act of 1995, no persons are required to respond to a collection of information unless it displays a valid OMB control number.

REQUEST FOR PARTICIPATION IN THE PATENT COOPERATION TREATY - PATENT PROSECUTION HIGHWAY (PCT-PPH) PILOT PROGRAM BETWEEN THE KOREAN INTELLECTUAL PROPERTY OFFICE (KIPO) AND THE USPTO

Application No:	12/474,868-Conf. #2400	Filing date:	May 29, 2009
First Named Inventor:	Robert C. STOVER		
Title of the Invention:	COMPRESSOR HAVING OUTPUT ADJUSTMENT ASSEMBLY INCLUDING PISTON ACTUATION		

THIS REQUEST FOR PARTICIPATION IN THE PCT-PPH PILOT PROGRAM ALONG WITH THE REQUIRED DOCUMENTS MUST BE SUBMITTED VIA EFS-WEB. INFORMATION REGARDING EFS-WEB IS AVAILABLE AT HTTP://WWW.USPTO.GOV/EBC/EFS_HELP.HTML

APPLICANT HEREBY REQUESTS PARTICIPATION IN THE PCT-PPH PROGRAM AND PETITIONS TO MAKE THE ABOVE-IDENTIFIED APPLICATION SPECIAL UNDER THE PCT-PPH PROGRAM.

The above-identified application is (1) a national stage entry of the corresponding PCT application, or (2) a national stage entry of another PCT application which claims priority to the corresponding PCT application, or (3) a national application that claims domestic/ foreign priority to the corresponding PCT application, or (4) a national application which forms the basis for the priority claim in the corresponding PCT application, or (5) a continuing application of a U.S. application that satisfies one of (1) to (4) above, or (6) a U.S. application that claims domestic benefit to a U.S. provisional application which forms the basis for the priority claim in the corresponding PCT application.

The corresponding PCT application number(s) is/are: PCT/US2009/045647

The international date of the corresponding PCT application(s) is/are: May 29, 2009

I. List of Required Documents:

a. **A copy of the latest international work product (WO/ISA, WO/IPEA, or IPER) in the above–identified corresponding PCT application(s)**

☐ Is attached.

☒ Is not attached because the document is already in the U.S. application.

b. **A copy of all claims which were indicated as having novelty, inventive step and industrial applicability in the above-identified corresponding PCT application(s).**

☐ Is attached.

☒ Is not attached because the document is already in the U.S. application.

c. **English translations of the documents in a. and b. above are attached (if the documents are not in the English language). A statement that the English translation is accurate is attached for the document in b. above.**

This collection of information is required by 35 U.S.C. 119, 37 CFR 1.55, and 37 CFR 1.102(d). The information is required to obtain or retain a benefit by the public, which is to file (and by the USPTO to process) an application. Confidentiality is governed by 35 U.S.C. 122 and 37 CFR 1.11 and 1.14. This collection is estimated to take 2 hours to complete, including gathering, preparing, and submitting the completed application form to the USPTO. Time will vary depending upon the individual case. Any comments on the amount of time you require to complete this form and/or suggestions for reducing this burden should be sent to the Chief Information Officer, U.S. Patent and Trademark Office, U.S. Department of Commerce, P.O. Box 1450, Alexandria, VA 22313-1450. DO NOT SEND FEES OR COMPLETED FORMS TO THIS ADDRESS.

Approved for use through 01/31/2012. OMB 0651-0058
U.S.Patent and Trademark Office; U.S. DEPARTMENT OF COMMERCE
Under the Paperwork Reduction Act of 1995, no persons are required to respond to a collection of information unless it displays a valid OMB control number.

REQUEST FOR PARTICIPATION IN THE PCT-PPH PILOT PROGRAM BETWEEN THE KIPO AND THE USPTO

(continued)

Application No.:	12/474,868-Conf. #2400
First Named Inventor:	Robert C. STOVER

d. **(1) An information disclosure statement listing the documents cited in the international work products (ISR, WO/ISA, WO/IPEA, IPER) of the corresponding PCT application.**

☐ Is attached

☒ Has already been filed in the above-identified U.S. application on Feb. 26, 2010

(2) Copies of all documents (except) for U.S. patents or U.S. patent application publications)

☐ Are attached.

Have already been filed in the above-identified U.S. application on Feb. 26, 2010

II. Claims Correspondence Table:

Claims in US Application	Patentable Claims in the corresponding PCT Application	Explanation regarding the correspondence
1-20	1-20	The U.S. claims and PCT claims are identical

III. All the claims in the US application sufficiently correspond to the patentable claims in the corresponding PCT application.

Signature	/MichaelMalinzak/	Date	February 7, 2011
Name (Print/Typed)	Michael Malinzak	Registration Number	43,770

Privacy Act Statement

The **Privacy Act of 1974 (P.L. 93-579)** requires that you be given certain information in connection with your submission of the attached form related to a patent application or patent. Accordingly, pursuant to the requirements of the Act, please be advised that: (1) the general authority for the collection of this information is 35 U.S.C. 2(b)(2); (2) furnishing of the information solicited is voluntary; and (3) the principal purpose for which the information is used by the U.S. Patent and Trademark Office is to process and/or examine your submission related to a patent application or patent. If you do not furnish the requested information, the U.S. Patent and Trademark Office may not be able to process and/or examine your submission, which may result in termination of proceedings or abandonment of the application or expiration of the patent.

The information provided by you in this form will be subject to the following routine uses:

1. The information on this form will be treated confidentially to the extent allowed under the Freedom of Information Act (5 U.S.C. 552) and the Privacy Act (5 U.S.C 552a). Records from this system of records may be disclosed to the Department of Justice to determine whether disclosure of these records is required by the Freedom of Information Act.
2. A record from this system of records may be disclosed, as a routine use, in the course of presenting evidence to a court, magistrate, or administrative tribunal, including disclosures to opposing counsel in the course of settlement negotiations.
3. A record in this system of records may be disclosed, as a routine use, to a Member of Congress submitting a request involving an individual, to whom the record pertains, when the individual has requested assistance from the Member with respect to the subject matter of the record.
4. A record in this system of records may be disclosed, as a routine use, to a contractor of the Agency having need for the information in order to perform a contract. Recipients of information shall be required to comply with the requirements of the Privacy Act of 1974, as amended, pursuant to 5 U.S.C. 552a(m).
5. A record related to an International Application filed under the Patent Cooperation Treaty in this system of records may be disclosed, as a routine use, to the International Bureau of the World Intellectual Property Organization, pursuant to the Patent Cooperation Treaty.
6. A record in this system of records may be disclosed, as a routine use, to another federal agency for purposes of National Security review (35 U.S.C. 181) and for review pursuant to the Atomic Energy Act (42 U.S.C. 218(c)).
7. A record from this system of records may be disclosed, as a routine use, to the Administrator, General Services, or his/her designee, during an inspection of records conducted by GSA as part of that agency's responsibility to recommend improvements in records management practices and programs, under authority of 44 U.S.C. 2904 and 2906. Such disclosure shall be made in accordance with the GSA regulations governing inspection of records for this purpose, and any other relevant (*i.e.*, GSA or Commerce) directive. Such disclosure shall not be used to make determinations about individuals.
8. A record from this system of records may be disclosed, as a routine use, to the public after either publication of the application pursuant to 35 U.S.C. 122(b) or issuance of a patent pursuant to 35 U.S.C. 151. Further, a record may be disclosed, subject to the limitations of 37 CFR 1.14, as a routine use, to the public if the record was filed in an application which became abandoned or in which the proceedings were terminated and which application is referenced by either a published application, an application open to public inspection or an issued patent.
9. A record from this system of records may be disclosed, as a routine use, to a Federal, State, or local law enforcement agency, if the USPTO becomes aware of a violation or potential violation of law or regulation.

UNITED STATES PATENT AND TRADEMARK OFFICE

UNITED STATES DEPARTMENT OF COMMERCE
United States Patent and Trademark Office
Address: COMMISSIONER FOR PATENTS
P.O. Box 1450
Alexandria, Virginia 22313-1450
www.uspto.gov

APPLICATION NO.	FILING DATE	FIRST NAMED INVENTOR	ATTORNEY DOCKET NO.	CONFIRMATION NO.
12/474,868	05/29/2009	Robert C. Stover	0315-000695/US	2400

27572 7590 02/09/2011
HARNESS, DICKEY & PIERCE, P.L.C.
P.O. BOX 828
BLOOMFIELD HILLS, MI 48303

EXAMINER

ART UNIT	PAPER NUMBER
3748	

MAIL DATE	DELIVERY MODE
02/09/2011	PAPER

Please find below and/or attached an Office communication concerning this application or proceeding.

The time period for reply, if any, is set in the attached communication.

UNITED STATES PATENT AND TRADEMARK OFFICE

Commissioner for Patents
United States Patent and Trademark Office
P.O. Box 1450
Alexandria, VA 22313-1450
www.uspto.gov

HARNESS, DICKEY & PIERCE, P.L.C.
P.O. BOX 828
BLOOMFIELD HILLS MI 48303

In re Application of	:	
STOVER, ROBERT C. et al	:	DECISION ON REQUEST TO
Application No. 12/474,868	:	PARTICIPATE IN PATENT
Filed: May 29, 2009	:	PCT/PROSECUTION HIGHWAY
Attorney Docket No. 0315-000695-US	:	PROGRAM AND PETITION
Title: COMPRESSOR HAVING OUTPUT ADJUSTMENT ASSEMBLY INCLUDING PISTON ACTUATION	:	37 CFR 1.102(a)

This is a decision on the request to participate in the Patent Prosecution Highway (PPH) program and the petition under 37 CFR 1.102(a), filed Feb. 7, 2011, to make the above-identified application special.

The request and petition are granted.

A grantable request to participate in the PPH program and petition to make special require:
(1) The U.S. application must disclose an eligible relationship to one or more PCT applications filed in the KIPO, JPO, EPO or USPTO;
(2) Applicant must submit a copy of the allowable/patentable claim(s) from the PCT application(s) latest international work product (the written opinion or the IPER) along with an English translation thereof and a statement that the English translation is accurate;
(3) All the claims in the U.S. application must sufficiently correspond or be amended to sufficiently correspond to the allowable/patentable claim(s) in the PCT application(s);
(4) Examination of the U.S. application has not begun;
(5) Applicant must submit a copy of the latest international work product from the PCT application containing the allowable/patentable claim(s) along with an English translation thereof and a statement that the English translation is accurate; and
(6) Applicant must submit an IDS listing the documents cited by the PCT examiner in the international work product along with copies of documents except U.S. patents or U.S. patent application publications.

In light of the petition being properly submitted, the request to participate in the PPH program and the petition comply with the above requirements. Accordingly, the above-identified application has been accorded "special" status.

The applicant is encouraged to cite and submit all relevant prior art references, if any, to facilitate examination in this application.

Other inquiries concerning the examination or status of the application should be directed to Thomas Denion, the SPE of Art Unit 3748 at 571-272-4859 for Class 418/55 and also accessible in the PAIR system at http://www.uspto.gov/ebc.index.html.

All other inquiries concerning the examination or status of the application should be directed to the Patent Application Information Retrieval (PAIR) system.

This application will be forwarded and docketed to an examiner for action on the merits commensurate with this decision.

Telephone inquiries concerning this decision should be directed to Henry C. Yuen, at 571-272-4856.

The petition is **granted.**

/Henry C. Yuen/

Henry C. Yuen, Special Programs Examiner
Technology Center 3700 – Mechanical Engineering,
Manufacturing and Products
571-272-4856

UNITED STATES PATENT AND TRADEMARK OFFICE

Commissioner for Patents
United States Patent and Trademark Office
P.O. Box 1450
Alexandria, VA 22313-1450
www.uspto.gov

MAILED
AUG 16 2010
OFFICE OF PETITIONS

DOW AGROSCIENCES LLC.
9330 ZIONSVILLE RD
INDIANAPOLIS, IN 46268

In re Application of	:	
Benko, et al.	:	
Application No. 12/474,928	:	ON PETITION
Filed: May 29, 2009	:	
Attorney Docket No. 61904B US	:	

This is a decision on the petition under 37 CFR 1.137(a), filed April 23, 2010, to revive the application.

The petition fee of $540.00 is being charged to deposit account no. 04-1529.

The petition is **DISMISSED**.

Any reconsideration petition must be submitted within TWO (2) MONTHS from the mail date of this decision. Extensions of time under 37 CFR 1.136(a) are permitted. The reconsideration request should include a cover letter entitled "Petition under 37 CFR 1.137(a)." This is **not** final agency action within the meaning of 5 U.S.C. § 704.

The above-identified application became abandoned for applicant's failure to timely pay the required issue fee and publication fee by March 29, 2010, as was required by the Notice of Allowance and Fee(s) Due, mailed December 29, 2009. Accordingly, the above-identified application became abandoned on March 30, 2010. A Notice of Abandonment was mailed April 16, 2010.

Petitioners allege that the December 29, 2009 Notice was not received at the correspondence address of record and therefore, the delay in responding to it was unavoidable.

A grantable petition to revive an abandoned application under 37 CFR 1.137(a) must be accompanied by (1) the required reply, unless previously filed.; (2) the petition fee as set forth in § 1.17(l); (3) a showing to the satisfaction of the Director that the entire delay in filing the required reply from the due date for the reply until the filing of a grantable petition pursuant to this paragraph was unavoidable; and (4) any terminal disclaimer (and fee as set forth in § 1.20 (d)) required pursuant to paragraph (c) of this section.

This petition does not satisfy requirement (3) listed above.

With respect to (3), the showing of record is inadequate to establish unavoidable delay within the meaning of 37 CFR 1.137(a). Specifically, an application is "unavoidably" abandoned only where petitioner, or counsel for petitioner, takes all action necessary for a proper response to the outstanding Office action, but through the intervention of unforeseen circumstances, such as failure of mail, telegraph, telefacsimile, or the negligence of otherwise reliable employees, the response is not timely received in the Office. Ex parte Pratt, 1887 Dec. Comm'r Pat. 31 (Comm'r Pat. 1887).

The Director may revive an abandoned application if the delay in responding to the relevant outstanding Office requirement is shown to the satisfaction of the Director to have been "unavoidable". 35 U.S.C. § 133. Decisions on reviving abandoned applications have adopted the reasonably prudent person standard in determining if the delay was unavoidable. Ex parte Pratt, 1887 Dec. Comm'r Pat. 31, 32-33 (Comm'r Pat. 1887)(the term 'unavoidable' "is applicable to ordinary human affairs, and requires no more or greater care or diligence than is generally used and observed by prudent and careful men in relation to their most important business"); In re Mattullath, 38 App. D.C. 497, 514-15 (D.C. Cir. 1912); Ex parte Henrich, 1913 Dec. Comm'r Pat. 139, 141 (Comm'r Pat. 1913). In addition, decisions on revival are made on a "case-by-case basis, taking all the facts and circumstances into account." Smith v. Mossinghoff, 671 F.2d 533, 538, 213 USPQ 977, 982 (D.C. Cir. 1982). Finally, a petition to revive an application as unavoidably abandoned cannot be granted where a petitioner has failed to meet his or her burden of establishing the cause of the unavoidable delay. Haines v. Quigg, 673 F. Supp. 314, 5 USPQ2d 1130 (N.D. Ind. 1987).

A review of the record indicates no irregularity in the mailing of the December 29, 2009 Notice, and in the absence of any irregularity there is a strong presumption that the communication was properly mailed to the applicants at the correspondence address of record. This presumption may be overcome by a showing that the aforementioned communication was not in fact received. In this regard, the showing required to establish the failure to receive the Notice must consist of the following:

1. a statement from practitioner stating that the Notice was not received by the practitioner;
2. a statement from the practitioner attesting to the fact that a search of the file jacket and docket records indicates that the Notice was not received; and
3. a copy of the docket record where the non-received Notice would have been entered had it been received must be attached to and referenced in practitioner's statement.

The petition fails to satisfy all of the above-stated requirements. Accordingly, absent the required evidence to establish non-receipt of the Notice of December 29, 2009, the petition cannot be granted at this time.

If petitioners cannot supply the evidence necessary to establish unavoidable delay, or simply does not wish to, petitioners should consider filing a petition under 37 CFR 1.137(b) stating that the

delay was unintentional. Public Law 97-247, § 3, 96 Stat. 317 (1982), which revised patent and trademark fees, amended 35 U.S.C. § 41(a)(7) to provide for the revival of an "unintentionally" abandoned application without a showing that the delay in prosecution or in late payment of the issue fee was "unavoidable." This amendment to 35 U.S.C. § 41(a)(7) has been implemented in 37 CFR 1.137(b). An "unintentional" petition under 37 CFR 1.137(b) must be accompanied by the $1620.00 petition fee.

The filing of a petition under 37 CFR 1.137(b) cannot be intentionally delayed and therefore must be filed promptly. A person seeking revival due to unintentional delay cannot make a statement that the delay was unintentional unless the entire delay, including the date it was discovered that the application was abandoned until the filing of the petition to revive under 37 CFR 1.137(b), was unintentional. A statement that the delay was unintentional is not appropriate if petitioner intentionally delayed the filing of a petition for revival under 37 CFR 1.137(b).

Further correspondence with respect to this matter should be addressed as follows:

By Mail: Mail Stop PETITION
Commissioner for Patents
P. O. Box 1450
Alexandria, VA 22313-1450

By hand: U. S. Patent and Trademark Office
Customer Service Window, Mail Stop Petitions
Randolph Building
401 Dulany Street
Alexandria, VA 22314

By facsimile: **(571) 273-8300**
Attn: Office of Petitions

By internet: EFS-Web
www.uspto.gov/ebc/efs_help.html
(for help using EFS-Web call the
Patent Electronic Business Center
at (866) 217-9197)

Telephone inquiries concerning this decision should be directed to the undersigned at (571) 272-3230.

Shirene Willis Brantley
Shirene Willis Brantley
Senior Petitions Attorney
Office of Petitions

UNITED STATES PATENT AND TRADEMARK OFFICE

Commissioner for Patents
United States Patent and Trademark Office
P.O. Box 1450
Alexandria, VA 22313-1450
www.uspto.gov

DOW AGROSCIENCES LLC.
9330 ZIONSVILLE RD
INDIANAPOLIS, IN 46268

MAILED
NOV 04 2010
OFFICE OF PETITIONS

In re Application of :
Benko, et al. :
Application No. 12/474,928 : ON PETITION
Filed: May 29, 2009 :
Attorney Docket No. 61904B US :

This is a decision on the renewed petition under 37 CFR 1.137(a), filed September 21, 2010, to revive the application.

The petition is **DISMISSED**.

Any renewed petition must be submitted within TWO (2) MONTHS from the mail date of this decision. Extensions of time under 37 CFR 1.136(a) are permitted. The reconsideration request should include a cover letter entitled "Petition under 37 CFR 1.137(a)." This is **not** final agency action within the meaning of 5 U.S.C. § 704.

The above-identified application became abandoned for applicant's failure to timely pay the required issue fee and publication fee by March 29, 2010, as was required by the Notice of Allowance and Fee(s) Due, mailed December 29, 2009. Accordingly, the above-identified application became abandoned on March 30, 2010. A Notice of Abandonment was mailed April 16, 2010.

Petitioners allege that the December 29, 2009 Notice was not received at the correspondence address of record and therefore, the delay in responding to it was unavoidable.

A grantable petition to revive an abandoned application under 37 CFR 1.137(a) must be accompanied by (1) the required reply, unless previously filed.; (2) the petition fee as set forth in § 1.17(l); (3) a showing to the satisfaction of the Director that the entire delay in filing the required reply from the due date for the reply until the filing of a grantable petition pursuant to this paragraph was unavoidable; and (4) any terminal disclaimer (and fee as set forth in § 1.20 (d)) required pursuant to paragraph (c) of this section.

This petition does not satisfy requirement (3) listed above.

With respect to (3), the showing of record is inadequate to establish unavoidable delay within the meaning of 37 CFR 1.137(a). Specifically, an application is "unavoidably" abandoned only where petitioner, or counsel for petitioner, takes all action necessary for a proper response to the outstanding Office action, but through the intervention of unforeseen circumstances, such as failure of mail, telegraph, telefacsimile, or the negligence of otherwise reliable employees, the response is not timely received in the Office. Ex parte Pratt, 1887 Dec. Comm'r Pat. 31 (Comm'r Pat. 1887).

The Director may revive an abandoned application if the delay in responding to the relevant outstanding Office requirement is shown to the satisfaction of the Director to have been "unavoidable". 35 U.S.C. § 133. Decisions on reviving abandoned applications have adopted the reasonably prudent person standard in determining if the delay was unavoidable. Ex parte Pratt, 1887 Dec. Comm'r Pat. 31, 32-33 (Comm'r Pat. 1887)(the term 'unavoidable' "is applicable to ordinary human affairs, and requires no more or greater care or diligence than is generally used and observed by prudent and careful men in relation to their most important business"); In re Mattullath, 38 App. D.C. 497, 514-15 (D.C. Cir. 1912); Ex parte Henrich, 1913 Dec. Comm'r Pat. 139, 141 (Comm'r Pat. 1913). In addition, decisions on revival are made on a "case-by-case basis, taking all the facts and circumstances into account." Smith v. Mossinghoff, 671 F.2d 533, 538, 213 USPQ 977, 982 (D.C. Cir. 1982). Finally, a petition to revive an application as unavoidably abandoned cannot be granted where a petitioner has failed to meet his or her burden of establishing the cause of the unavoidable delay. Haines v. Quigg, 673 F. Supp. 314, 5 USPQ2d 1130 (N.D. Ind. 1987).

A review of the record indicates no irregularity in the mailing of the December 29, 2009 Notice, and in the absence of any irregularity there is a strong presumption that the communication was properly mailed to the applicants at the correspondence address of record. This presumption may be overcome by a showing that the aforementioned communication was not in fact received. In this regard, the showing required to establish the failure to receive the Notice must consist of the following:

1. a statement from practitioner stating that the Notice was not received by the practitioner;
2. a statement from the practitioner attesting to the fact that a search of the file jacket and docket records indicates that the Notice was not received; and
3. a copy of the docket record where the non-received Notice would have been entered had it been received must be attached to and referenced in practitioner's statement.

The petition is lacking because the docket record provided is not sufficient to establish non-receipt. . A copy of the practitioner's record(s) required to show non-receipt of the Office action should include the master docket for the firm. That is, if a three month period for reply was set in the non-received Office action, a copy of the master docket report showing all replies docketed for a date three months from the mail date of the non-received Office action must be submitted as documentary proof of non-receipt of the Office action. If no such master docket exists, the

practitioner should so state and provide other evidence such as, but not limited to, the following: the application file jacket; incoming mail log; calendar; reminder system; or the individual docket record for the application in question. See MPEP §711.03(c)(I)(A).

Please provide a redacted, if desired, copy of the master docket showing all replies docketed for a date three months from the mail date of the December 29, 2009 Notice. If no master docket exists, please state so in any renewed petition.

Further correspondence with respect to this matter should be addressed as follows:

By Mail: Mail Stop PETITION
Commissioner for Patents
P. O. Box 1450
Alexandria, VA 22313-1450

By hand: U. S. Patent and Trademark Office
Customer Service Window, Mail Stop Petitions
Randolph Building
401 Dulany Street
Alexandria, VA 22314

By facsimile: **(571) 273-8300**
Attn: Office of Petitions

By internet: EFS-Web
www.uspto.gov/ebc/efs_help.html
(for help using EFS-Web call the
Patent Electronic Business Center
at (866) 217-9197)

Telephone inquiries concerning this decision should be directed to the undersigned at (571) 272-3230.

Shirene Willis Brantley
Senior Petitions Attorney
Office of Petitions

UNITED STATES PATENT AND TRADEMARK OFFICE

Commissioner for Patents
United States Patent and Trademark Office
P.O. Box 1450
Alexandria, VA 22313-1450
www.uspto.gov

DOW AGROSCIENCES LLC.
9330 ZIONSVILLE RD
INDIANAPOLIS, IN 46268

MAILED
JAN 26 2011
OFFICE OF PETITIONS

In re Application of	:	
Benko, et al.	:	
Application No. 12/474,928	:	ON PETITION
Filed: May 29, 2009	:	
Attorney Docket No. 61904B US	:	

This is a decision on the renewed petition under 37 CFR 1.137(a), filed November 30, 2010, to revive the application.

The petition is **GRANTED**.

The above-identified application became abandoned for applicant's failure to timely pay the required issue fee and publication fee by March 29, 2010, as was required by the Notice of Allowance and Fee(s) Due, mailed December 29, 2009. Accordingly, the above-identified application became abandoned on March 30, 2010. A Notice of Abandonment was mailed April 16, 2010.

The petition satisfies the requirements of 37 CFR 1.137(a) in that petitioner has supplied (1) the required reply in the form of the $1,510.00 issue fee, the $300.00 publication fee, and a completed PTOL-85(b); (2) the petition fee of $540.00; and (3) a showing to the satisfaction of the Director that the entire delay was unavoidable.

This application is being referred to the Office of Data Management for processing into a patent.

Telephone inquiries concerning this decision should be directed to the undersigned at (571) 272-3230.

Shirene Willis Brantley
Shirene Willis Brantley
Senior Petitions Attorney
Office of Petitions

UNITED STATES PATENT AND TRADEMARK OFFICE

Commissioner for Patents
United States Patent and Trademark Office
P.O. Box 1450
Alexandria, VA 22313-1450
www.uspto.gov

MICHAEL BEST & FRIEDRICH LLP
100 E WISCONSIN AVENUE
Suite 3300
MILWAUKEE WI 53202

MAILED

JUN 16 2011

OFFICE OF PETITIONS

In re Application of	:	
Kim et al.	:	
Application No. 12/474943	:	ON REQUEST FOR
Filing or 371(c) Date: 05/29/2009	:	RECONSIDERATION OF
Attorney Docket Number:	:	PATENT TERM ADJUSTMENT
023812-9004-01	:	

This is a decision on the "REQUEST FOR RECONSIDERATION OF PATENT TERM ADJUSTMENT UNDER 37 C.F.R. § 1.705(b)," filed May 2, 2011. Applicant petitions for reconsideration of the patent term adjustment adding 63 days, not zero (0) days as calculated by the Office as of the mailing of the initial determination of patent term adjustment. Applicant requests this correction based upon an assertion that the Office erred in calculating a reduction of 79 days.

The Application for Patent Term Adjustment Including Request for Reconsideration of Patent Term Adjustment ("PTA") under 37 CFR 1.705(b), as it relates to the assertion that the Office erred in calculating a reduction of 79 days is **GRANTED**.

On February 3, 2011, the Office mailed the Determination of Patent Term Adjustment under 35 U.S.C. 154(b) in the above-identified application. The Notice stated that the patent term adjustment (PTA) to date is zero (0) days.

On May 2, 2011, Applicant timely submitted the instant application for patent term adjustment[1]. Applicant requests that the Determination of Patent Term Adjustment be corrected from zero (0) days, as indicated on the Determination of PTA mailed May 2, 2011, to an adjustment of 63 days. Applicant avers that the Office incorrectly charged Applicant with 79 days of delay.

Applicant asserts that the Office erred in calculating a reduction of 79 days. The Determination of Patent Term Adjustment under 35 U.S.C. 154(b) mailed February 3, 2011 indicates a patent term of zero (0) days. The instant request for reconsideration of patent term adjustment indicates that the Office may have erred in calculating a reduction of 79 days in connection with the filing of a Supplemental Amendment on January 19, 2011, filed in reply to an Interview with the

[1] PALM records show that the Issue Fee payment was received in the Office on May 2, 2011.

Examiner, conducted January 11, 2011, and 79 days after filing a reply to a Restriction Requirement on November 1, 2010.

Office records reveal that a reply to a Restriction Requirement was filed on November 1, 2010. An Examiner Interview was conducted on January 11, 2011, wherein the Examiner noted that claims 1-14 were allowable if Applicant amends the claims. An Interview Summary was entered into the file on February 3, 2011. Applicants filed a Supplemental Amendment on January 19, 2011, in response to the Interview. Accordingly, the period of reduction of 79 days entered for the Supplemental Amendment is not warranted and is being removed.

In view thereof, as of the time of allowance, the application is entitled to an overall patent term adjustment of sixty-three (63) days, subject to any terminal disclaimer.

The Office acknowledges submission of the $200.00 fee set forth in 37 CFR 1.18(e). No additional fees are required.

The application is being forwarded to the Publications Division for issuance of a patent. The patent term adjustment indicated on the patent (as shown on the Issue Notification mailed about three weeks prior to patent issuance) will include any additional adjustment accrued both for Office delay in issuing the patent more than four months after payment of the issue fee and satisfaction of all outstanding requirements, and for the Office taking in excess of three years to issue the patent (to the extent that the three-year period does not overlap with periods already accorded).

Telephone inquiries specific to this matter should be directed to the undersigned at (571) 272-3232.

/DLW/

Derek L. Woods
Attorney
Office of Petitions

Enclosure: Copy of Adjustment PAIR Calculations

Patent Term Adjustments

PTA/PTE Information | Patent Term Adjustment | Patent Term Extension

Application Number*: 12474943 Search | Explanation of PTA Calculation | Explanation of PTE Calculation

PTA Calculations for Application: 12474943

Application Filing Date	05/29/2009	OverLapping Days Between (A and B) or (A and C)	0
Issue Date of Patent		Non-Overlapping USPTO Delays:	63
A Delays	63	PTO Manual Adjustment	79
B Delays	0	Applicant Delay (APPL)	79
C Delays	0	Total PTA (days)	63

* - Sorted Column

File Contents History

Action Number	Action Recorded Date	Action Due Date	Action Code	Action Description	Duration PTO	Duration APPL	Parent Action Number
39	06/14/2011		P028	Adjustment of PTA Calculation by PTO	79		0
32	02/03/2011		MN/=.	Mail Notice of Allowance			0
31	02/02/2011		IREV	Issue Revision Completed			0
30	02/02/2011		DVER	Document Verification			0
29	02/02/2011		N/=.	Notice of Allowance Data Verification Completed			0
27	02/02/2011		CNTA	Allowability Notice			0
24	01/21/2011		FWDX	Date Forwarded to Examiner			0
23	01/19/2011	11/01/2010	SA..	Supplemental Response		79	21
28	01/11/2011		EXIN	Examiner Interview Summary Record (PTOL - 413)			0
22	11/03/2010		FWDX	Date Forwarded to Examiner			0
21	11/01/2010		ELC.	Response to Election / Restriction Filed			0
20	09/30/2010	07/29/2010	MCTRS	Mail Restriction Requirement	63		0.5
19	09/29/2010		CTRS	Restriction/Election Requirement			0
25	07/26/2010		IDSC	Information Disclosure Statement considered			0
16	07/26/2010		EIDS.	Electronic Information Disclosure Statement			0
15	07/26/2010		WIDS	Information Disclosure Statement (IDS) Filed			0
14	12/03/2009		PG-ISSUE	PG-Pub Issue Notification			0
13	11/05/2009		DOCK	Case Docketed to Examiner in GAU			0
11	08/25/2009		OIPE	Application Dispatched from OIPE			0
10	08/25/2009		FLRCPT.U	Filing Receipt - Updated			0
9	08/12/2009		ADDFLFEE	Additional Application Filing Fees			0
8	08/12/2009		OATHDECL	A statement by one or more inventors satisfying the requirement under 35 USC 115, Oath of the Applic			0
7	08/12/2009		APPERMS	Applicants have given acceptable permission for participating foreign			0
6	06/15/2009		INCD	Notice Mailed--Application Incomplete--Filing Date Assigned			0
5	06/15/2009		FLRCPT.O	Filing Receipt			0
26	05/29/2009		IDSC	Information Disclosure Statement considered			0
12	05/29/2009		EIDS.	Electronic Information Disclosure Statement			0
4	05/29/2009		WIDS	Information Disclosure Statement (IDS) Filed			0
3	05/29/2009		L194	Cleared by OIPE CSR			0
2	05/29/2009		SCAN	IFW Scan & PACR Auto Security Review			0
1	05/29/2009		IEXX	Initial Exam Team nn			0
0.5	05/29/2009		EFILE	Filing date			0

Export to: Excel

PTO/SB/20PCT-KR (06-10)
Approved for use through 01/31/2012. OMB 0651-0058
U.S. Patent and Trademark Office; U. S. DEPARTMENT OF COMMERCE
Under the Paperwork Reduction Act of 1995, no persons are required to respond to a collection of information unless it displays a valid OMB control number.

REQUEST FOR PARTICIPATION IN THE PATENT COOPERATION TREATY - PATENT PROSECUTION HIGHWAY (PCT-PPH) PILOT PROGRAM BETWEEN THE KOREAN INTELLECTUAL PROPERTY OFFICE (KIPO) AND THE USPTO

Application No:	12/474,954-Conf. #2560	Filing date:	May 29, 2009
First Named Inventor:	Robert C. STOVER		
Title of the Invention:	COMPRESSOR HAVING CAPACITY MODULATION SYSTEM		

THIS REQUEST FOR PARTICIPATION IN THE PCT-PPH PILOT PROGRAM ALONG WITH THE REQUIRED DOCUMENTS MUST BE SUBMITTED VIA EFS-WEB. INFORMATION REGARDING EFS-WEB IS AVAILABLE AT HTTP://WWW.USPTO.GOV/EBC/EFS_HELP.HTML

APPLICANT HEREBY REQUESTS PARTICIPATION IN THE PCT-PPH PROGRAM AND PETITIONS TO MAKE THE ABOVE-IDENTIFIED APPLICATION SPECIAL UNDER THE PCT-PPH PROGRAM.

The above-identified application is (1) a national stage entry of the corresponding PCT application, or (2) a national stage entry of another PCT application which claims priority to the corresponding PCT application, or (3) a national application that claims domestic/ foreign priority to the corresponding PCT application, or (4) a national application which forms the basis for the priority claim in the corresponding PCT application, or (5) a continuing application of a U.S. application that satisfies one of (1) to (4) above, or (6) a U.S. application that claims domestic benefit to a U.S. provisional application which forms the basis for the priority claim in the corresponding PCT application.

The corresponding PCT application number(s) is/are: PCT/US2009/045665

The international date of the corresponding PCT application(s) is/are: May 29, 2009

I. List of Required Documents:

a. **A copy of the latest international work product (WO/ISA, WO/IPEA, or IPER) in the above–identified corresponding PCT application(s)**

☐ Is attached.

☒ Is not attached because the document is already in the U.S. application.

b. **A copy of all claims which were indicated as having novelty, inventive step and industrial applicability in the above-identified corresponding PCT application(s).**

☐ Is attached.

☒ Is not attached because the document is already in the U.S. application.

c. **English translations of the documents in a. and b. above are attached (if the documents are not in the English language). A statement that the English translation is accurate is attached for the document in b. above.**

This collection of information is required by 35 U.S.C. 119, 37 CFR 1.55, and 37 CFR 1.102(d). The information is required to obtain or retain a benefit by the public, which is to file (and by the USPTO to process) an application. Confidentiality is governed by 35 U.S.C. 122 and 37 CFR 1.11 and 1.14. This collection is estimated to take 2 hours to complete, including gathering, preparing, and submitting the completed application form to the USPTO. Time will vary depending upon the individual case. Any comments on the amount of time you require to complete this form and/or suggestions for reducing this burden should be sent to the Chief Information Officer, U.S. Patent and Trademark Office, U.S. Department of Commerce, P.O. Box 1450, Alexandria, VA 22313-1450. DO NOT SEND FEES OR COMPLETED FORMS TO THIS ADDRESS.

Approved for use through 01/31/2012. OMB 0651-0058
U.S.Patent and Trademark Office; U.S. DEPARTMENT OF COMMERCE
Under the Paperwork Reduction Act of 1995, no persons are required to respond to a collection of information unless it displays a valid OMB control number.

REQUEST FOR PARTICIPATION IN THE PCT-PPH PILOT PROGRAM BETWEEN THE KIPO AND THE USPTO

(continued)

Application No.:	12/474,954-Conf. #2560
First Named Inventor:	Robert C. STOVER

d. **(1) An information disclosure statement listing the documents cited in the international work products (ISR, WO/ISA, WO/IPEA, IPER) of the corresponding PCT application.**

☐ Is attached

☒ Has already been filed in the above-identified U.S. application on Feb. 26, 2010

(2) Copies of all documents (except) for U.S. patents or U.S. patent application publications)

☐ Are attached.

Have already been filed in the above-identified U.S. application on Feb. 26, 2010

II. Claims Correspondence Table:

Claims in US Application	Patentable Claims in the corresponding PCT Application	Explanation regarding the correspondence
1-17	1-17	The U.S. claims and PCT claims are identical

III. All the claims in the US application sufficiently correspond to the patentable claims in the corresponding PCT application.

Signature	/MichaelMalinzak/	Date	February 7, 2011
Name (Print/Typed)	Michael Malinzak	Registration Number	43,770

Privacy Act Statement

The **Privacy Act of 1974 (P.L. 93-579)** requires that you be given certain information in connection with your submission of the attached form related to a patent application or patent. Accordingly, pursuant to the requirements of the Act, please be advised that: (1) the general authority for the collection of this information is 35 U.S.C. 2(b)(2); (2) furnishing of the information solicited is voluntary; and (3) the principal purpose for which the information is used by the U.S. Patent and Trademark Office is to process and/or examine your submission related to a patent application or patent. If you do not furnish the requested information, the U.S. Patent and Trademark Office may not be able to process and/or examine your submission, which may result in termination of proceedings or abandonment of the application or expiration of the patent.

The information provided by you in this form will be subject to the following routine uses:

1. The information on this form will be treated confidentially to the extent allowed under the Freedom of Information Act (5 U.S.C. 552) and the Privacy Act (5 U.S.C 552a). Records from this system of records may be disclosed to the Department of Justice to determine whether disclosure of these records is required by the Freedom of Information Act.
2. A record from this system of records may be disclosed, as a routine use, in the course of presenting evidence to a court, magistrate, or administrative tribunal, including disclosures to opposing counsel in the course of settlement negotiations.
3. A record in this system of records may be disclosed, as a routine use, to a Member of Congress submitting a request involving an individual, to whom the record pertains, when the individual has requested assistance from the Member with respect to the subject matter of the record.
4. A record in this system of records may be disclosed, as a routine use, to a contractor of the Agency having need for the information in order to perform a contract. Recipients of information shall be required to comply with the requirements of the Privacy Act of 1974, as amended, pursuant to 5 U.S.C. 552a(m).
5. A record related to an International Application filed under the Patent Cooperation Treaty in this system of records may be disclosed, as a routine use, to the International Bureau of the World Intellectual Property Organization, pursuant to the Patent Cooperation Treaty.
6. A record in this system of records may be disclosed, as a routine use, to another federal agency for purposes of National Security review (35 U.S.C. 181) and for review pursuant to the Atomic Energy Act (42 U.S.C. 218(c)).
7. A record from this system of records may be disclosed, as a routine use, to the Administrator, General Services, or his/her designee, during an inspection of records conducted by GSA as part of that agency's responsibility to recommend improvements in records management practices and programs, under authority of 44 U.S.C. 2904 and 2906. Such disclosure shall be made in accordance with the GSA regulations governing inspection of records for this purpose, and any other relevant (*i.e.*, GSA or Commerce) directive. Such disclosure shall not be used to make determinations about individuals.
8. A record from this system of records may be disclosed, as a routine use, to the public after either publication of the application pursuant to 35 U.S.C. 122(b) or issuance of a patent pursuant to 35 U.S.C. 151. Further, a record may be disclosed, subject to the limitations of 37 CFR 1.14, as a routine use, to the public if the record was filed in an application which became abandoned or in which the proceedings were terminated and which application is referenced by either a published application, an application open to public inspection or an issued patent.
9. A record from this system of records may be disclosed, as a routine use, to a Federal, State, or local law enforcement agency, if the USPTO becomes aware of a violation or potential violation of law or regulation.

UNITED STATES PATENT AND TRADEMARK OFFICE

UNITED STATES DEPARTMENT OF COMMERCE
United States Patent and Trademark Office
Address: COMMISSIONER FOR PATENTS
P.O. Box 1450
Alexandria, Virginia 22313-1450
www.uspto.gov

APPLICATION NO.	FILING DATE	FIRST NAMED INVENTOR	ATTORNEY DOCKET NO.	CONFIRMATION NO.
12/474,954	05/29/2009	Robert C. Stover	0315-000702/US	2560

27572 7590 02/09/2011
HARNESS, DICKEY & PIERCE, P.L.C.
P.O. BOX 828
BLOOMFIELD HILLS, MI 48303

EXAMINER
DAVIS, MARY ALICE

ART UNIT	PAPER NUMBER
3748	

MAIL DATE	DELIVERY MODE
02/09/2011	PAPER

Please find below and/or attached an Office communication concerning this application or proceeding.

The time period for reply, if any, is set in the attached communication.

UNITED STATES PATENT AND TRADEMARK OFFICE

Commissioner for Patents
United States Patent and Trademark Office
P.O. Box 1450
Alexandria, VA 22313-1450
www.uspto.gov

HARNESS, DICKEY & PIERCE, P.L.C.
P.O. BOX 828
BLOOMFIELD HILLS MI 48303

In re Application of	:	
STOVER, ROBERT C. et al	:	DECISION ON REQUEST TO
Application No. 12/474,954	:	PARTICIPATE IN PATENT
Filed: May 29, 2009	:	PCT/PROSECUTION HIGHWAY
Attorney Docket No. 0315-000702-US	:	PROGRAM AND PETITION
Title: COMPRESSOR HAVING CAPACITY MODULATION SYSTEM	:	37 CFR 1.102(a)

This is a decision on the request to participate in the Patent Prosecution Highway (PPH) program and the petition under 37 CFR 1.102(a), filed Feb. 7, 2011, to make the above-identified application special.

The request and petition are granted.

A grantable request to participate in the PPH program and petition to make special require:
(1) The U.S. application must disclose an eligible relationship to one or more PCT applications filed in the KIPO, JPO, EPO or USPTO;
(2) Applicant must submit a copy of the allowable/patentable claim(s) from the PCT application(s) latest international work product (the written opinion or the IPER) along with an English translation thereof and a statement that the English translation is accurate;
(3) All the claims in the U.S. application must sufficiently correspond or be amended to sufficiently correspond to the allowable/patentable claim(s) in the PCT application(s);
(4) Examination of the U.S. application has not begun;
(5) Applicant must submit a copy of the latest international work product from the PCT application containing the allowable/patentable claim(s) along with an English translation thereof and a statement that the English translation is accurate; and
(6) Applicant must submit an IDS listing the documents cited by the PCT examiner in the international work product along with copies of documents except U.S. patents or U.S. patent application publications.

In light of the petition being properly submitted, the request to participate in the PPH program and the petition comply with the above requirements. Accordingly, the above-identified application has been accorded "special" status.

The applicant is encouraged to cite and submit all relevant prior art references, if any, to facilitate examination in this application.

Other inquiries concerning the examination or status of the application should be directed to Thomas Denion, the SPE of Art Unit 3748 at 571-272-4859 for Class 418/55 and also accessible in the PAIR system at http://www.uspto.gov/ebc.index.html.

All other inquiries concerning the examination or status of the application should be directed to the Patent Application Information Retrieval (PAIR) system.

This application will be forwarded and docketed to an examiner for action on the merits commensurate with this decision.

Telephone inquiries concerning this decision should be directed to Henry C. Yuen, at 571-272-4856.

The petition is **granted.**

/Henry C. Yuen/

Henry C. Yuen, Special Programs Examiner
Technology Center 3700 – Mechanical Engineering,
Manufacturing and Products
571-272-4856

UNITED STATES PATENT AND TRADEMARK OFFICE

Commissioner for Patents
United States Patent and Trademark Office
P.O. Box 1450
Alexandria, VA 22313-1450
www.uspto.gov

MAILED
MAR 15 2012
OFFICE OF PETITIONS

THE LUTHER LAW FIRM, PLC
10575 N 114TH STREET
SUITE 103
SCOTTSDALE AZ 85259

In re Application of	:	
PARTAK	:	
Application No. 12/474,972	:	DECISION ON PETITION
Filed: May 29, 2009	:	TO WITHDRAW
Attorney Docket No. WG-02ORD	:	FROM RECORD
	:	

This is a decision on the Request to Withdraw as attorney or agent of record under 37 C.F.R. § 1.36(b), filed February 15, 2012.

The request is **APPROVED**.

A grantable request to withdraw as attorney/agent of record must be signed by every attorney/agent seeking to withdraw or contain a clear indication that one attorney is signing on behalf of another/others. The Office requires the practitioner(s) requesting withdrawal to certify that he, she, or they have: (1) given reasonable notice to the client, prior to the expiration of the response period, that the practitioner(s) intends to withdraw from employment; (2) delivered to the client or a duly authorized representative of the client all papers and property (including funds) to which the client is entitled; and (3) notified the client of any responses that may be due and the time frame within which the client must respond, pursuant 37 CFR 10.40(c).

The request was signed by Barbara J. Luther, on behalf of the attorneys of record associated with Customer No. 51951.

The attorneys of record associated with Customer No. 51951 have been withdrawn.

Applicant is reminded that there is no attorney of record at this time.

The correspondence address of record has been changed and the new correspondence address is the address indicated below until otherwise properly notified.

Telephone inquiries concerning this decision should be directed to the undersigned at (571) 272-6735.

/Diane Goodwyn/
Diane Goodwyn
Petitions Examiner
Office of Petitions

cc: KATHY PARTAK
265 AEOLIA DRIVE
AUBURN CA 95603

UNITED STATES PATENT AND TRADEMARK OFFICE

UNITED STATES DEPARTMENT OF COMMERCE
United States Patent and Trademark Office
Address: COMMISSIONER FOR PATENTS
P.O. Box 1450
Alexandria, Virginia 22313-1450
www.uspto.gov

APPLICATION NUMBER	FILING OR 371(C) DATE	FIRST NAMED APPLICANT	ATTY. DOCKET NO./TITLE
12/474,972	05/29/2009	Kathy Partak	WG-02ORD

CONFIRMATION NO. 2601

POWER OF ATTORNEY NOTICE

51951
THE LUTHER LAW FIRM, PLC
10575 N 114TH STREET
SUITE 103
SCOTTSDALE, AZ 85259

OC000000053141477

Date Mailed: 03/15/2012

NOTICE REGARDING CHANGE OF POWER OF ATTORNEY

This is in response to the Power of Attorney filed 02/15/2012.

- The withdrawal as attorney in this application has been accepted. Future correspondence will be mailed to the new address of record. 37 CFR 1.33.

/dcgoodwyn/

Office of Data Management, Application Assistance Unit (571) 272-4000, or (571) 272-4200, or 1-888-786-0101

PTO/SB/420 (05-10)
Approved for use through 01/31/2011. OMB 0651-0062
U.S. Patent and Trademark Office; U.S. DEPARTMENT OF COMMERCE
Under the Paperwork Reduction Act of 1995, no persons are required to respond to a collection of information unless it displays a valid OMB control number.

PETITION TO MAKE SPECIAL UNDER THE GREEN TECHNOLOGY PILOT PROGRAM

Attorney Docket Number: 235487-1	Application Number (if known): 12/474989	Filing date: May 29, 2009

First Named Inventor: Andrew Johnson

Title: SYSTEM, METHOD, AND COMPUTER SOFTWARE CODE FOR LINKING A PLURALITY OF POWERED SYSTEMS HAVING DIFFERENT LINKING PROTOCOLS TO OPERATE AS A SINGLE POWERED SYSTEM

APPLICANT HEREBY REQUESTS TO PARTICIPATE IN THE GREEN TECHNOLOGY PILOT PROGRAM FOR THE ABOVE-IDENTIFIED APPLICATION. See Instruction Sheet on page 2.

This petition must be timely filed electronically using the USPTO electronic filing system, EFS-Web.

1. By filing this petition:

   Applicant is requesting early publication: Applicant hereby requests early publication under 37 CFR 1.219 and the publication fee set forth in 37 CFR 1.18(d) accompanies this request.

2. By filing this petition: applicant is agreeing to make an election without traverse in a telephonic interview and elect an invention that meets the eligibility requirements set forth in the notice titled "Pilot Program for Green Technologies Including Greenhouse Gas Reduction," as modified by the notice titled "Elimination of Classification Requirement in the Green Technology Pilot Program," each of which was published in the Federal Register, if the Office determines that the claims are not obviously directed to a single invention.

3. This request is accompanied by statements of special status for the eligibility requirement.

4. The application contains no more than three (3) independent claims and twenty (20) total claims.

5. The application does not contain any multiple dependent claims.

6. Other attachments: Preliminary Amendment

Signature /John A. Kramer/	Date November 18, 2010
Name (Print/Typed) John A. Kramer	Registration Number 46302

Note: *Signatures of all the inventors or assignees of record of the entire interest or their representative(s) are required in accordance with 37 CFR 1.33 and 11.18. Please see 37 CFR 1.4(d) for the form of the signature. If necessary, submit multiple forms for more than one signature, see below*.*

☐ *Total of..... forms are submitted.

The information is required to obtain or retain a benefit by the public which is to file (and by the USPTO to process) an application. Confidentiality is governed by 35 U.S.C. 122 and 37 CFR 1.11 and 1.14. This collection is estimated to take 1 hour to complete, including gathering, preparing, and submitting the completed application form to the USPTO. Time will vary depending upon the individual case. Any comments on the amount of time you require to complete this form and/or suggestions for reducing this burden, should be sent to the Chief Information Officer, U.S. Patent and Trademark Office, U.S. Department of Commerce, P.O. Box 1450, Alexandria, VA 22313-1450. DO NOT SEND FEES OR COMPLETED FORMS TO THIS ADDRESS. **SEND TO: Commissioner for Patents, P.O. Box 1450, Alexandria, VA 22313-1450.**

If you need assistance in completing the form, call 1-800-PTO-9199 and select option 2.

UNITED STATES PATENT AND TRADEMARK OFFICE

UNITED STATES DEPARTMENT OF COMMERCE
United States Patent and Trademark Office
Address: COMMISSIONER FOR PATENTS
P.O. Box 1450
Alexandria, Virginia 22313-1450
www.uspto.gov

APPLICATION NO.	FILING DATE	FIRST NAMED INVENTOR	ATTORNEY DOCKET NO.	CONFIRMATION NO.
12/474,989	05/29/2009	Andrew M. Johnson	235487-1	2626

50488 7590 11/24/2010
ALLEMAN HALL MCCOY RUSSELL & TUTTLE LLP
806 SW BROADWAY
SUITE 600
PORTLAND, OR 97205-3335

EXAMINER
BRYANT, DAVID P

ART UNIT	PAPER NUMBER
3726	

MAIL DATE	DELIVERY MODE
11/24/2010	PAPER

Please find below and/or attached an Office communication concerning this application or proceeding.

The time period for reply, if any, is set in the attached communication.

UNITED STATES PATENT AND TRADEMARK OFFICE

Commissioner for Patents
United States Patent and Trademark Office
P.O. Box 1450
Alexandria, VA 22313-1450
www.uspto.gov

ALLEMAN HALL MCCOY RUSSELL & TUTTLE LLP
806 SW BROADWAY
SUITE 600
PORTLAND OR 97205-3335

In re Application of	:	
JOHNSON, ANDREW M.	:	DECISION ON PETITION
Application No. 12/474,989	:	TO MAKE SPECIAL UNDER
Filed: May 29, 2009	:	THE GREEN TECHNOLOGY
Attorney Docket No. 235487-1	:	PILOT PROGRAM

This is a decision on the petition under 37 CFR 1.102, filed Nov. 18, 2010, to make the above-identified application special under the pilot program for applications pertaining to Green Technologies as set forth in 74 Federal Register Notice 64666 (December 8, 2009) and amended by 75 Federal Register Notice 28554 (May 21, 2010) and 75 Federal Register Notice 69049 (November 10, 2010).

The petition is **DISMISSED**.

If reconsideration of this decision is desired, a petition for reconsideration must be filed within ONE (1) MONTH OR THIRTY (30) DAYS from the mail date of this decision, whichever is longer. No extension of this time limit can be granted under 37 CFR 1.136(a) or (b). The petition for reconsideration should include an exhaustive attempt to provide the lacking item(s) noted below, since, after a decision on the petition for reconsideration, no further reconsideration or review of the matter will be undertaken by the Director.

A grantable petition to make an application special under 37 CFR 1.102 and the pilot program as set forth in 74 FR 64666 must be directed to a nonprovisional application filed under 35 USC 111(a) or be a national stage entry under 35 USC 371, exclusive of any reissue applications.

In order to qualify for special status, the following requirements must be met. 1) The application must have no more than 3 independent claims and no more than 20 total claims. 2) The application must not contain any multiple dependent claims. 3) The petition must state the basis for seeking special status, i.e., the claimed invention either: A) materially enhances the quality of the environment or B) materially contributes to: i) the discovery or development of renewable energy resources, ii) the more efficient utilization and conservation of energy resources, or iii)

greenhouse gas emission reduction. 4) If the disclosure is not clear on its face that the claimed invention materially contributes under category (A) or (B), the petition must be accompanied by a statement by the applicant, assignee, or an attorney/agent registered to practice before the Office explaining how the materiality standard is met. 5) A statement that applicant will agree to make an election without traverse in a telephonic interview if a restriction requirement is made by the examiner. 6) The petition to make special must be filed electronically. 7) The petition must be filed at least one day prior to the date that a first Office Action appears in the Patent Application Information Retrieval (PAIR) system. 8) The petition must be accompanied by a request for early publication in compliance with 37 CFR 1.219 and include the publication fee as set forth in 37 CFR 1.18(d).

The requirement for a fee for consideration of the petition to make special for applications pertaining to Green Technologies has been waived.

The petition lacks item # 4.

In regard to item 4, petitioner should note that the instant petition includes a statement identifying the basis for the special status (i.e., whether the instant invention (1) materially enhances the quality of the environment or materially contributes to (2) development of renewable energy resources or energy conservation, or (3) greenhouse gas reduction) as required by sections II and III of the notice. However, as stated in the notice, applicant must also provide a statement pertaining to the materiality standard if the application disclosure is not clear on its face as to the materiality of the basis for the special status of the invention. This petition lacks such a statement and it is not agreed that the application on its face meets that materiality standard. For example, it is not clear how the claimed kit to retrofit a cooling system of a turbocharged engine will enhance the quality of the environment or materially contributes to development of renewable energy resources or energy conservation, or reduces greenhouse gas.

Any reconsideration of this decision should be submitted through the USPTO electronic filing system, EFS-Web, and selecting the document description of "Petition for Green Tech Pilot" on the EFS-Web screen.

Telephone inquiries concerning this decision should be directed to Henry C. Yuen at 571-272-4856.

The application will be forwarded to the Technology Center Art Unit 3745 for action in its regular turn.

/Henry C. Yuen/

Henry C. Yuen
Quality Assurance Specialist
Technology Center 3700

IN THE UNITED STATES PATENT AND TRADEMARK OFFICE

Applicant	:	Andrew M. Johnson
Application No.	:	12/474,989
Filed	:	May 29, 2009
Title	:	COOLING SYSTEM KIT, METHOD TO RETROFIT, AND METHOD TO OPERATE A TURBOCHARGED ENGINE SYSTEM
Group Art Unit	:	3726
Confirmation No.	:	2626
Docket No.	:	235487-1

Commissioner for Patents
P.O. Box 1450
Alexandria, VA 22313-1450

CERTIFICATE OF TRANSMISSION

I hereby certify that this correspondence is being transmitted via EFS to the USPTO on:

December 17, 2010
Date

Caitlin Fackrell
Caitlin Fackrell

PETITION FOR RECONSIDERATION

Responsive to the denial of Applicant's Petition under 37 CFR 1.102 filed November 18, 2010, Applicant respectfully requests consideration of the following revised statement concerning the basis for the special status as well as the following statement explaining how the materiality standard is met to satisfy requirement #4.

Statement of Facts

1. Applicant filed a Petition under 37 CFR 1.102 on November 18, 2010, to make the subject application special under the pilot program for applications pertaining to Green Technologies.
2. In a Decision on Petition mailed November 24, 2010, Applicant's Petition was dismissed as lacking item #4, *i.e.*, failing to include a statement pertaining to the materiality standard.
3. By way of this Petition for Reconsideration, Applicant revises the previously filed statement identifying the basis for special status, and provides a statement pertaining to the materiality standard.

Basis of the Petition

I. Statement concerning the basis for special status.

Applicant hereby revises the statement concerning the basis for special status filed in the November 18, 2010 petition. Applicant submits that special status is sought on the following basis: the claimed invention materially enhances the quality of the environment.

II. Statement pertaining to the materiality standard.

Applicant submits that the claimed invention materially enhances the quality of the environment by reducing NO_X emissions, which can negatively impact the quality of the environment. As disclosed at paragraphs [0003] – [0010] of Applicant's specification, the level of NO_X emissions from a diesel engine may be linked to manifold air temperature, with lower manifold air temperatures enabling lower emissions. In turbocharged diesel-engine systems, providing coolant of a relatively low temperature to the charge-air intercoolers may improve emissions. In accordance with the claimed invention, a turbocharged engine system may be retrofit for reduced NO_X emissions in a cost-effective manner, *e.g.*, without replacing the more expensive components of the original cooling system. As disclosed at paragraph [0031] of Applicant's specification, in one embodiment, the claimed invention transforms an original cooling system into a modified cooling system suitable for providing a lower manifold air temperature and lower NO_X emissions.

Request for Relief

For the above reasons, Applicant respectfully requests reconsideration of the Petition under 37 CFR 1.102 filed November 18, 2010 to make the subject application special under the pilot program for applications pertaining to Green Technologies. Please charge any cost incurred in the filing of this Petition for Reconsideration, along with any other costs, to Deposit Account No. 07-0846.

Respectfully submitted,

ALLEMAN HALL MCCOY RUSSELL & TUTTLE LLP

John D. Russell
Registration No. 47,048
Customer No. 50488
Attorney/Agent for Applicant/Assignee
806 S.W. Broadway, Suite 600
Portland, Oregon 97205
Telephone: (503) 459-4141
Facsimile: (503) 459-4142

UNITED STATES PATENT AND TRADEMARK OFFICE

UNITED STATES DEPARTMENT OF COMMERCE
United States Patent and Trademark Office
Address: COMMISSIONER FOR PATENTS
P.O. Box 1450
Alexandria, Virginia 22313-1450
www.uspto.gov

APPLICATION NO.	FILING DATE	FIRST NAMED INVENTOR	ATTORNEY DOCKET NO.	CONFIRMATION NO.
12/474,989	05/29/2009	Andrew M. Johnson	235487-1	2626

50488 7590 12/21/2010
ALLEMAN HALL MCCOY RUSSELL & TUTTLE LLP
806 SW BROADWAY
SUITE 600
PORTLAND, OR 97205-3335

EXAMINER
BRYANT, DAVID P

ART UNIT	PAPER NUMBER
3726	

MAIL DATE	DELIVERY MODE
12/21/2010	PAPER

Please find below and/or attached an Office communication concerning this application or proceeding.

The time period for reply, if any, is set in the attached communication.

UNITED STATES PATENT AND TRADEMARK OFFICE

Commissioner for Patents
United States Patent and Trademark Office
P.O. Box 1450
Alexandria, VA 22313-1450
www.uspto.gov

ALLEMAN HALL MCCOY RUSSELL & TUTTLE LLP
806 SW BROADWAY
SUITE 600
PORTLAND OR 97205-3335

In re Application of	:	
JOHNSON, ANDREW M.	:	DECISION ON PETITION
Application No. 12/474,989	:	TO MAKE SPECIAL UNDER
Filed: May 29, 2009	:	THE GREEN TECHNOLOGY
Attorney Docket No. 235487-1	:	PILOT PROGRAM

This is a decision on the renewed petition under 37 CFR 1.102, filed Dec. 17, 2010, to make the above-identified application special under the pilot program for applications pertaining to Green Technologies as set forth in 74 Federal Register Notice 64666 (December 8, 2009) and amended by 75 Federal Register Notice 28554 (May 21, 2010) and 75 Federal Register Notice 69049 (November 10, 2010).

The petition is Granted.

If reconsideration of this decision is desired, a petition for reconsideration must be filed within ONE (1) MONTH OR THIRTY (30) DAYS from the mail date of this decision, whichever is longer. No extension of this time limit can be granted under 37 CFR 1.136(a) or (b). The petition for reconsideration should include an exhaustive attempt to provide the lacking item(s) noted below, since, after a decision on the petition for reconsideration, no further reconsideration or review of the matter will be undertaken by the Director.

A grantable petition to make an application special under 37 CFR 1.102 and the pilot program as set forth in 74 FR 64666 must be directed to a nonprovisional application filed under 35 USC 111(a) or be a national stage entry under 35 USC 371, exclusive of any reissue applications.

In order to qualify for special status, the following requirements must be met. 1) The application must have no more than 3 independent claims and no more than 20 total claims. 2) The application must not contain any multiple dependent claims. 3) The petition must state the basis for seeking special status, i.e., the claimed invention either: A) materially enhances the quality of the environment or B) materially contributes to: i) the discovery or development of renewable energy resources, ii) the more efficient utilization and conservation of energy resources, or iii)

greenhouse gas emission reduction. 4) If the disclosure is not clear on its face that the claimed invention materially contributes under category (A) or (B), the petition must be accompanied by a statement by the applicant, assignee, or an attorney/agent registered to practice before the Office explaining how the materiality standard is met. 5) A statement that applicant will agree to make an election without traverse in a telephonic interview if a restriction requirement is made by the examiner. 6) The petition to make special must be filed electronically. 7) The petition must be filed at least one day prior to the date that a first Office Action appears in the Patent Application Information Retrieval (PAIR) system. 8) The petition must be accompanied by a request for early publication in compliance with 37 CFR 1.219 and include the publication fee as set forth in 37 CFR 1.18(d).

The requirement for a fee for consideration of the petition to make special for applications pertaining to Green Technologies has been waived.

The instant petition complies with items 1 – 8 above. Accordingly, the above-identified application has been accorded "special" status.

Telephone inquires concerning this decision should be directed to Henry C. Yuen at 571-272-4856.

This application will be forwarded to the Technology Center Art Unit 3745 for action on the merits commensurate with this decision.

/Henry C. Yuen/

Henry C. Yuen
Quality Assurance Specialist
Technology Center TC 3700

UNITED STATES PATENT AND TRADEMARK OFFICE

Commissioner for Patents
United States Patent and Trademark Office
P.O. Box 1450
Alexandria, VA 22313-1450
www.uspto.gov

Peter A. DiMattia
Patent and Licensing Department, Nalco Company
1601 West Diehl Road
Naperville IL 60563-1198

MAILED

MAR 22 2012

OFFICE OF PETITIONS

In re Application of	:	
Duggirala, et al.	:	DECISION ON PETITION
Application No. 12/474,990	:	
Filed: May 29, 2009	:	
Attorney Docket No. 8229	:	

This is a decision on the "PETITION TO PRESERVE RIGHTS OF SIGNING INVENTORS," filed January 23, 2012. This matter is being properly treated as a request under 37 CFR 1.48(a) and a petition under 37 CFR 1.47(a).

37 CFR 1.48(a)

Petitioners herein appear to seek a change in inventorship with the addition of inventor Jacobson pursuant to 37 CFR 1.48(a). Petitioners seem to assert that inventor Jacobson either cannot be reached or has refused to execute the declaration required under 37 CFR 1.48(a)(3) and 1.63.

Petitioners have submitted a request under 37 CFR 1.48. A grantable request pursuant to 37 CFR 1.48 (a) requires:

> (1) A request to correct the inventorship that sets forth the desired inventorship change;
> (2) A statement from each person being added as an inventor and from each person being deleted as an inventor that the error in inventorship occurred without deceptive intention on his or her part;
> (3) An oath or declaration by the actual inventor or inventors as required by § 1.63 or as permitted by §§ 1.42, 1.43 or § 1.47;
> (4) The processing fee set forth in § 1.17(i); and
> (5) If an assignment has been executed by any of the original named inventors, the written consent of the assignee (see § 3.73(b) of this chapter).

The instant request fails requirements (2), (3), and (5) set forth above. The required fee of $130.00 has been charged to the authorized deposit account.

With respect to requirement (2), the required statement from the inventor to be added has not been provided. To the extent that petitioners allege that the non-signing inventor refuses to make the statement or cannot be reached to make the statement, petitioners may wish to submit a petition under 37 CFR 1.183 requesting waiver 37 CFR 1.48(a)(2). Any petition under 37 CFR 1.183 would require the required petition fee of $400.00.

With respect to requirement (3), the request is not accompanied by a proper oath or declaration under 37 CFR 1.63. The declaration submitted herewith is not acceptable because someone other than the inventor and the available inventors has signed the declaration on behalf of non-signing inventor Jacobson. To the extent that the inventor Jacobson is not available and/or has refused to execute the declaration, the remaining inventors may execute the declaration on behalf of themselves and inventor Jacobson.

With respect to requirement (5), the written consent of the assignee for the change of inventorship has not been presented.

In view thereof, the request under 37 CFR 1.48 is hereby **DISMISSED**.

37 CFR 1.47(a)

A grantable petition under 37 CFR 1.47(a) requires:

> (1) proof that the non-signing inventor cannot be reached or refuses to sign the oath or declaration after having been presented with the application papers (specification, claims and drawings);
> (2) an acceptable oath or declaration signed by the available inventors in compliance with 35 U.S.C. §§ 115 and 116;
> (3) the petition fee; and
> (4) a statement of the last known address of the non-signing inventor.

The instant petition fails to satisfy requirements (1) and (2) set forth above.

With respect to requirement (3), the required petition fee under 37 CFR 1.47 has been charged to the authorized deposit account.

With respect to requirement (1), petitioners assert that the application papers were mailed to the non-signing inventor at his last known address on December 11, 2011. Petitioners further assert that attempts to contact the non-signing inventor via telephone have not been successful.

In this regard, petitioners have failed to establish that the non-signing inventor received a complete copy of the application papers (specification, including claims, drawings, and oath or declaration) and thereafter refused to execute the oath or declaration or that the non-signing inventor cannot be reached or located.

The manner by which the application papers were presented to the non-signing inventor has not been disclosed. Petitioners have not provided any documentary evidence that the application papers were sent to and received by the non-signing inventor and that after such presentation of the application papers, the non-signing inventor refused to sign the declaration.

Thus, it cannot be established that the non-signing inventor has refused to execute the application papers for the above-identified application after having been presented with the application paper.

To the extent petitioners assert that the non-signing inventor has refused to execute the oath or declaration for the instant application, petitioners are required to establish that the non-signing inventor received a complete copy of the instant application before a refusal to sign an oath or declaration can be alleged. Where a refusal of the inventor to sign the application papers is alleged, the circumstances of the presentation of the application papers and of the refusal must be specified in a statement of facts by the person who presented the inventor with the application papers and/or to whom the refusal was made. Statements by a party not present when an oral refusal is made will not be accepted.

Proof that a bona fide attempt was made to present a copy of the application papers (specification, including claims, drawings, and oath or declaration) to the non-signing inventor for signature, but the inventor refused to accept delivery of the papers or expressly stated that the application papers should not be sent, may be sufficient. When there is an express oral refusal, that fact along with the time and place of the refusal must be stated in the statement of facts. When there is an express written refusal, a copy of the document evidencing that refusal must be made part of the statement of facts. The document may be redacted to remove material not related to the inventor's reasons for refusal.

When it is concluded by the 37 CFR 1.47 applicant that a non-signing inventor's conduct constitutes a refusal, all facts upon which that conclusion is based should be stated in the statement of facts in support of the petition or directly in the petition. If there is documentary evidence to support facts alleged in the petition or in any statement of facts, such evidence should be submitted. Whenever a non-signing inventor gives a reason for refusing to sign the application oath or declaration, that reason should be stated in the petition.

Any renewed petition should be accompanied by evidence to establish that each non-signing inventor was sent a complete copy of the application papers (specification, claims, drawings, and oath or declaration) and thereafter refused to execute the declaration. Petitioners may wish to provide the Office copies of letters sent to each inventor indicating the enclosure of the application papers (specification, claims, drawings, and oath or declaration). If after the inventor receives the application papers and requests to execute the oath or declaration are refused, these facts should be set forth in a statement of facts signed by the person to whom the refusals were made and detailing with specificity the exact manner of the refusals. If a written refusal has been made, a copy of the written refusal should be included on renewed petition. See, MPEP 409.03(c).

To the extent that petitioners assert that the non-signing inventor cannot be reached or located, be advised that where inability to reach or locate a non-signing inventor is alleged, petitioners are required to establish that diligent effort was made to locate the non-signing inventor and provide the non-signing inventor with a complete copy of the patent application (specification, including claims, drawings, and oath or declaration). Any renewed petition must be supported by evidence

that sufficiently establishes that despite diligent effort, the non-signing inventor cannot be located. A statement of facts should be submitted that fully describes the exact facts that are relied on to establish that a *diligent effort* was made to locate the non-signing inventor. The statement of facts must be signed, where at all possible, by a person having *firsthand knowledge* of the facts recited therein. Statements based on hearsay, will not normally be accepted. At the very least, a search of the internet and human resource records, etc. should be undertaken. *Petitioner should reference and supply evidence of any such searches in a renewed petition.* See, MPEP 409.03(d).

The petition fails to satisfy requirement (2) set forth above. The declaration is not properly executed on behalf of the non-signing inventor, as indicated herein. See, also, MPEP 409.03.

With respect to requirement (4), the last known address of the non-signing inventor has been provided. However, should further investigation reveal a more current address, such information should be conveyed to the Office.

An application filed pursuant to 37 CFR 1.47 must state the last known address of the non-signing inventor. That address should be the last known address at which the inventor customarily receives mail. Ordinarily, the last known address will be the last known residence of the non-signing inventor. Inasmuch as a non-signing inventor is notified that an application pursuant to 37 CFR 1.47 has been filed on his or her behalf, other addresses at which the non-signing inventor may be reached should also be given. Each applicant's mailing or post office address is required to be supplied on the oath or declaration, if not stated in an application data sheet. Applicant's mailing address means that address at which he or she customarily receives his or her mail. Either applicant's home or business address is acceptable as the mailing address. The mailing address should include the ZIP Code designation. The object of requiring each applicant's mailing address is to enable the Office to communicate directly with the applicant if desired; hence, the address of the attorney with instruction to send communications to applicant in care of the attorney is not sufficient.

In situations where an inventor does not execute the oath or declaration and the inventor is not deceased, such as in an application filed under 37 CFR 1.47, the inventor's most recent home address **must** be given to enable the Office to communicate directly with the inventor as necessary. See, MPEP §§ 409.03(e) and 605.03.

In view thereof, the petition under 37 CFR 1.47(a) is hereby **DISMISSED**.

Applicant is given TWO (2) MONTHS from the mailing date of this decision to reply. The request for reconsideration should indicate the relief sought and make an appropriate showing. Any extensions of time will be governed by 37 CFR 1.136(a).

Further correspondence with respect to this matter should be addressed as follows:

By Mail: Mail Stop MISSING PARTS
Commissioner for Patents

Post Office Box 1450
Alexandria, VA 22313-1450

By Hand: U. S. Patent and Trademark Office
Customer Window, Mail Stop PETITIONS
401 Dulany Street
Alexandria, VA 22314

The centralized facsimile number is **(571) 273-8300.**

This application is being returned to Group Art Unit 1741.

Telephone inquiries should be directed to the undersigned at (571) 272-3205.

/ALESIA M. BROWN/

Alesia M. Brown
Attorney Advisor
Office of Petitions

UNITED STATES PATENT AND TRADEMARK OFFICE

Commissioner for Patents
United States Patent and Trademark Office
P.O. Box 1450
Alexandria, VA 22313-1450
www.uspto.gov

Peter A. DiMattia
Patent and Licensing Department, Nalco Company
1601 West Diehl Road
Naperville IL 60563-1198

MAILED
MAR 22 2012
OFFICE OF PETITIONS

In re Application of :
Duggirala, et al. : DECISION ON PETITION
Application No. 12/474,990 :
Filed: May 29, 2009 :
Attorney Docket No. 8229 :

This is a decision on the "PETITION TO PRESERVE RIGHTS OF SIGNING INVENTORS," filed January 23, 2012. This matter is being properly treated as a request under 37 CFR 1.48(a) and a petition under 37 CFR 1.47(a).

37 CFR 1.48(a)

Petitioners herein appear to seek a change in inventorship with the addition of inventor Jacobson pursuant to 37 CFR 1.48(a). Petitioners seem to assert that inventor Jacobson either cannot be reached or has refused to execute the declaration required under 37 CFR 1.48(a)(3) and 1.63.

Petitioners have submitted a request under 37 CFR 1.48. A grantable request pursuant to 37 CFR 1.48 (a) requires:

> (1) A request to correct the inventorship that sets forth the desired inventorship change;
> (2) A statement from each person being added as an inventor and from each person being deleted as an inventor that the error in inventorship occurred without deceptive intention on his or her part;
> (3) An oath or declaration by the actual inventor or inventors as required by § 1.63 or as permitted by §§ 1.42, 1.43 or § 1.47;
> (4) The processing fee set forth in § 1.17(i); and
> (5) If an assignment has been executed by any of the original named inventors, the written consent of the assignee (see § 3.73(b) of this chapter).

The instant request fails requirements (2), (3), and (5) set forth above. The required fee of $130.00 has been charged to the authorized deposit account.

With respect to requirement (2), the required statement from the inventor to be added has not been provided. To the extent that petitioners allege that the non-signing inventor refuses to make the statement or cannot be reached to make the statement, petitioners may wish to submit a

petition under 37 CFR 1.183 requesting waiver 37 CFR 1.48(a)(2). Any petition under 37 CFR 1.183 would require the required petition fee of $400.00.

With respect to requirement (3), the request is not accompanied by a proper oath or declaration under 37 CFR 1.63. The declaration submitted herewith is not acceptable because someone other than the inventor and the available inventors has signed the declaration on behalf of non-signing inventor Jacobson. To the extent that the inventor Jacobson is not available and/or has refused to execute the declaration, the remaining inventors may execute the declaration on behalf of themselves and inventor Jacobson.

With respect to requirement (5), the written consent of the assignee for the change of inventorship has not been presented.

In view thereof, the request under 37 CFR 1.48 is hereby **DISMISSED**.

37 CFR 1.47(a)

A grantable petition under 37 CFR 1.47(a) requires:

> (1) proof that the non-signing inventor cannot be reached or refuses to sign the oath or declaration after having been presented with the application papers (specification, claims and drawings);
> (2) an acceptable oath or declaration signed by the available inventors in compliance with 35 U.S.C. §§ 115 and 116;
> (3) the petition fee; and
> (4) a statement of the last known address of the non-signing inventor.

The instant petition fails to satisfy requirements (1) and (2) set forth above.

With respect to requirement (3), the required petition fee under 37 CFR 1.47 has been charged to the authorized deposit account.

With respect to requirement (1), petitioners assert that the application papers were mailed to the non-signing inventor at his last known address on December 11, 2011. Petitioners further assert that attempts to contact the non-signing inventor via telephone have not been successful.

In this regard, petitioners have failed to establish that the non-signing inventor received a complete copy of the application papers (specification, including claims, drawings, and oath or declaration) and thereafter refused to execute the oath or declaration or that the non-signing inventor cannot be reached or located.

The manner by which the application papers were presented to the non-signing inventor has not been disclosed. Petitioners have not provided any documentary evidence that the application papers were sent to and received by the non-signing inventor and that after such presentation of the application papers, the non-signing inventor refused to sign the declaration.

Thus, it cannot be established that the non-signing inventor has refused to execute the application papers for the above-identified application after having been presented with the application paper.

To the extent petitioners assert that the non-signing inventor has refused to execute the oath or declaration for the instant application, petitioners are required to establish that the non-signing inventor received a complete copy of the instant application before a refusal to sign an oath or declaration can be alleged. Where a refusal of the inventor to sign the application papers is alleged, the circumstances of the presentation of the application papers and of the refusal must be specified in a statement of facts by the person who presented the inventor with the application papers and/or to whom the refusal was made. Statements by a party not present when an oral refusal is made will not be accepted.

Proof that a bona fide attempt was made to present a copy of the application papers (specification, including claims, drawings, and oath or declaration) to the non-signing inventor for signature, but the inventor refused to accept delivery of the papers or expressly stated that the application papers should not be sent, may be sufficient. When there is an express oral refusal, that fact along with the time and place of the refusal must be stated in the statement of facts. When there is an express written refusal, a copy of the document evidencing that refusal must be made part of the statement of facts. The document may be redacted to remove material not related to the inventor's reasons for refusal.

When it is concluded by the 37 CFR 1.47 applicant that a non-signing inventor's conduct constitutes a refusal, all facts upon which that conclusion is based should be stated in the statement of facts in support of the petition or directly in the petition. If there is documentary evidence to support facts alleged in the petition or in any statement of facts, such evidence should be submitted. Whenever a non-signing inventor gives a reason for refusing to sign the application oath or declaration, that reason should be stated in the petition.

Any renewed petition should be accompanied by evidence to establish that each non-signing inventor was sent a complete copy of the application papers (specification, claims, drawings, and oath or declaration) and thereafter refused to execute the declaration. Petitioners may wish to provide the Office copies of letters sent to each inventor indicating the enclosure of the application papers (specification, claims, drawings, and oath or declaration). If after the inventor receives the application papers and requests to execute the oath or declaration are refused, these facts should be set forth in a statement of facts signed by the person to whom the refusals were made and detailing with specificity the exact manner of the refusals. If a written refusal has been made, a copy of the written refusal should be included on renewed petition. See, MPEP 409.03(c).

To the extent that petitioners assert that the non-signing inventor cannot be reached or located, be advised that where inability to reach or locate a non-signing inventor is alleged, petitioners are required to establish that diligent effort was made to locate the non-signing inventor and provide the non-signing inventor with a complete copy of the patent application (specification, including

claims, drawings, and oath or declaration). Any renewed petition must be supported by evidence that sufficiently establishes that despite diligent effort, the non-signing inventor cannot be located. A statement of facts should be submitted that fully describes the exact facts that are relied on to establish that a *diligent effort* was made to locate the non-signing inventor. The statement of facts must be signed, where at all possible, by a person having *firsthand knowledge* of the facts recited therein. Statements based on hearsay, will not normally be accepted. At the very least, a search of the internet and human resource records, etc. should be undertaken. *Petitioner should reference and supply evidence of any such searches in a renewed petition.* See, MPEP 409.03(d).

The petition fails to satisfy requirement (2) set forth above. The declaration is not properly executed on behalf of the non-signing inventor, as indicated herein. See, also, MPEP 409.03.

With respect to requirement (4), the last known address of the non-signing inventor has been provided. However, should further investigation reveal a more current address, such information should be conveyed to the Office.

An application filed pursuant to 37 CFR 1.47 must state the last known address of the non-signing inventor. That address should be the last known address at which the inventor customarily receives mail. Ordinarily, the last known address will be the last known residence of the non-signing inventor. Inasmuch as a non-signing inventor is notified that an application pursuant to 37 CFR 1.47 has been filed on his or her behalf, other addresses at which the non-signing inventor may be reached should also be given. Each applicant's mailing or post office address is required to be supplied on the oath or declaration, if not stated in an application data sheet. Applicant's mailing address means that address at which he or she customarily receives his or her mail. Either applicant's home or business address is acceptable as the mailing address. The mailing address should include the ZIP Code designation. The object of requiring each applicant's mailing address is to enable the Office to communicate directly with the applicant if desired; hence, the address of the attorney with instruction to send communications to applicant in care of the attorney is not sufficient.

In situations where an inventor does not execute the oath or declaration and the inventor is not deceased, such as in an application filed under 37 CFR 1.47, the inventor's most recent home address **must** be given to enable the Office to communicate directly with the inventor as necessary. See, MPEP §§ 409.03(e) and 605.03.

In view thereof, the petition under 37 CFR 1.47(a) is hereby **DISMISSED**.

Applicant is given TWO (2) MONTHS from the mailing date of this decision to reply. The request for reconsideration should indicate the relief sought and make an appropriate showing. Any extensions of time will be governed by 37 CFR 1.136(a).

Further correspondence with respect to this matter should be addressed as follows:

By Mail: Mail Stop MISSING PARTS

Commissioner for Patents
Post Office Box 1450
Alexandria, VA 22313-1450

By Hand: U. S. Patent and Trademark Office
Customer Window, Mail Stop PETITIONS
401 Dulany Street
Alexandria, VA 22314

The centralized facsimile number is **(571) 273-8300.**

This application is being returned to Group Art Unit 1741.

Telephone inquiries should be directed to the undersigned at (571) 272-3205.

/ALESIA M. BROWN/

Alesia M. Brown
Attorney Advisor
Office of Petitions

PTO/SB/20PCT-EP (05-10)
Approved for use through 01/31/2012. OMB 0651-0058
U.S. Patent and Trademark Office; U. S. DEPARTMENT OF COMMERCE
Under the Paperwork Reduction Act of 1995, no persons are required to respond to a collection of information unless it displays a valid OMB control number.

REQUEST FOR PARTICIPATION IN THE PATENT COOPERATION TREATY - PATENT PROSECUTION HIGHWAY (PCT-PPH) PILOT PROGRAM BETWEEN THE EUROPEAN PATENT OFFICE (EPO) AND THE USPTO

Application No:	12/474,994	Filing date:	2009-05-29
First Named Inventor:	Putman, Matthew C.		
Title of the Invention:	Unique Digital Imaging Method Employing Known Background		

THIS REQUEST FOR PARTICIPATION IN THE PCT-PPH PILOT PROGRAM ALONG WITH THE REQUIRED DOCUMENTS MUST BE SUBMITTED VIA EFS-WEB. INFORMATION REGARDING EFS-WEB IS AVAILABLE AT HTTP://WWW.USPTO.GOV/EBC/EFS_HELP.HTML

APPLICANT HEREBY REQUESTS PARTICIPATION IN THE PCT-PPH PROGRAM AND PETITIONS TO MAKE THE ABOVE-IDENTIFIED APPLICATION SPECIAL UNDER THE PCT-PPH PROGRAM.

The above-identified application is (1) a national stage entry of the corresponding PCT application, or (2) a national stage entry of another PCT application which claims priority to the corresponding PCT application, or (3) a national application that claims domestic/ foreign priority to the corresponding PCT application, or (4) a national application which forms the basis for the priority claim in the corresponding PCT application, or (5) a continuing application of a U.S. application that satisfies one of (1) to (4) above, or (6) a U.S. application that claims domestic benefit to a U.S. provisional application which forms the basis for the priority claim in the corresponding PCT application.

The corresponding PCT application number(s) is/are: PCT/US2010/036588

The international filing date of the corresponding PCT application(s) is/are: 2010-05-28

I. List of Required Documents:

a. **A copy of the latest international work product (WO/ISA, WO/IPEA, or IPER) in the above–identified corresponding PCT application(s)**

- [x] Is attached
- [ ] Is not attached because the document is already in the U.S. application.

b. **A copy of all claims which were indicated as having novelty, inventive step and industrial applicability in the above-identified corresponding PCT application(s).**

- [x] Is attached.
- [ ] Is not attached because the document is already in the U.S. application.

c. **English translations of the documents in a. and b. above are attached (if the documents are not in the English language). A statement that the English translation is accurate is attached for the document in b. above.**

This collection of information is required by 35 U.S.C. 119, 37 CFR 1.55, and 37 CFR 1.102(d). The information is required to obtain or retain a benefit by the public, which is to file (and by the USPTO to process) an application. Confidentiality is governed by 35 U.S.C. 122 and 37 CFR 1.11 and 1.14. This collection is estimated to take 2 hours to complete, including gathering, preparing, and submitting the completed application form to the USPTO. Time will vary depending upon the individual case. Any comments on the amount of time you require to complete this form and/or suggestions for reducing this burden should be sent to the Chief Information Officer, U.S. Patent and Trademark Office, U.S. Department of Commerce, P.O. Box 1450, Alexandria, VA 22313-1450. DO NOT SEND FEES OR COMPLETED FORMS TO THIS ADDRESS.

Approved for use through 01/31/2012. OMB 0651-0058
U.S.Patent and Trademark Office; U.S. DEPARTMENT OF COMMERCE

Under the Paperwork Reduction Act of 1995, no persons are required to respond to a collection of information unless it displays a valid OMB control number.

REQUEST FOR PARTICIPATION IN THE PCT-PPH PILOT PROGRAM BETWEEN THE EPO AND THE USPTO

(continued)

Application No.:	
First Named Inventor:	

d. **(1) An information disclosure statement listing the documents cited in the international work products (ISR, WO/ISA, WO/IPEA, IPER) of the corresponding PCT application.**

- [x] Is attached
- [ ] Has already been filed in the above-identified U.S. application on _____

(2) Copies of all documents (except) for U.S. patents or U.S. patent application publications)

- [ ] Are attached.
- [ ] Have already been filed in the above-identified U.S. application on _____

II. Claims Correspondence Table:

Claims in US Application	Patentable Claims in the corresponding PCT Application	Explanation regarding the correspondence
1	1	Verbatim but Claim 1 in US application ends with "in said step of moving the specimen to a second position."
2	2	Verbatim
3	3	Verbatim
4	4	Verbatim
5	5	Verbatim
6	6	Verbatim
7	7	Verbatim
8	8	Verbatim
9	9	Verbatim
10	10	Verbatim
11	11	Verbatim
12	12	Verbatim

III. All the claims in the US application sufficiently correspond to the patentable claims in the corresponding PCT application.

Signature /marklweber/	Date February 15, 2011
Name (Print/Typed) Mark L. Weber	Registration Number 46,069

Privacy Act Statement

The **Privacy Act of 1974 (P.L. 93-579)** requires that you be given certain information in connection with your submission of the attached form related to a patent application or patent. Accordingly, pursuant to the requirements of the Act, please be advised that: (1) the general authority for the collection of this information is 35 U.S.C. 2(b)(2); (2) furnishing of the information solicited is voluntary; and (3) the principal purpose for which the information is used by the U.S. Patent and Trademark Office is to process and/or examine your submission related to a patent application or patent. If you do not furnish the requested information, the U.S. Patent and Trademark Office may not be able to process and/or examine your submission, which may result in termination of proceedings or abandonment of the application or expiration of the patent.

The information provided by you in this form will be subject to the following routine uses:

1. The information on this form will be treated confidentially to the extent allowed under the Freedom of Information Act (5 U.S.C. 552) and the Privacy Act (5 U.S.C 552a). Records from this system of records may be disclosed to the Department of Justice to determine whether disclosure of these records is required by the Freedom of Information Act.
2. A record from this system of records may be disclosed, as a routine use, in the course of presenting evidence to a court, magistrate, or administrative tribunal, including disclosures to opposing counsel in the course of settlement negotiations.
3. A record in this system of records may be disclosed, as a routine use, to a Member of Congress submitting a request involving an individual, to whom the record pertains, when the individual has requested assistance from the Member with respect to the subject matter of the record.
4. A record in this system of records may be disclosed, as a routine use, to a contractor of the Agency having need for the information in order to perform a contract. Recipients of information shall be required to comply with the requirements of the Privacy Act of 1974, as amended, pursuant to 5 U.S.C. 552a(m).
5. A record related to an International Application filed under the Patent Cooperation Treaty in this system of records may be disclosed, as a routine use, to the International Bureau of the World Intellectual Property Organization, pursuant to the Patent Cooperation Treaty.
6. A record in this system of records may be disclosed, as a routine use, to another federal agency for purposes of National Security review (35 U.S.C. 181) and for review pursuant to the Atomic Energy Act (42 U.S.C. 218(c)).
7. A record from this system of records may be disclosed, as a routine use, to the Administrator, General Services, or his/her designee, during an inspection of records conducted by GSA as part of that agency's responsibility to recommend improvements in records management practices and programs, under authority of 44 U.S.C. 2904 and 2906. Such disclosure shall be made in accordance with the GSA regulations governing inspection of records for this purpose, and any other relevant (*i.e.*, GSA or Commerce) directive. Such disclosure shall not be used to make determinations about individuals.
8. A record from this system of records may be disclosed, as a routine use, to the public after either publication of the application pursuant to 35 U.S.C. 122(b) or issuance of a patent pursuant to 35 U.S.C. 151. Further, a record may be disclosed, subject to the limitations of 37 CFR 1.14, as a routine use, to the public if the record was filed in an application which became abandoned or in which the proceedings were terminated and which application is referenced by either a published application, an application open to public inspection or an issued patent.
9. A record from this system of records may be disclosed, as a routine use, to a Federal, State, or local law enforcement agency, if the USPTO becomes aware of a violation or potential violation of law or regulation.

PATENT COOPERATION TREATY

PCT

INTERNATIONAL SEARCH REPORT

(PCT Article 18 and Rules 43 and 44)

Applicant's or agent's file reference NNTP2PCT	**FOR FURTHER ACTION**	see Form PCT/ISA/220 as well as, where applicable, item 5 below.
International application No. PCT/US2010/036588	International filing date *(day/month/year)* 28/05/2010	(Earliest) Priority Date *(day/month/year)* 29/05/2009
Applicant NANOTRONICS, INC.		

This international search report has been prepared by this International Searching Authority and is transmitted to the applicant according to Article 18. A copy is being transmitted to the International Bureau.

This international search report consists of a total of 5 sheets.

[X] It is also accompanied by a copy of each prior art document cited in this report.

1. **Basis of the report**
   a. With regard to the **language**, the international search was carried out on the basis of:
      [X] the international application in the language in which it was filed
      [ ] a translation of the international application into _____, which is the language of a translation furnished for the purposes of international search (Rules 12.3(a) and 23.1(b))
   b. [ ] This international search report has been established taking into account the **rectification of an obvious mistake** authorized by or notified to this Authority under Rule 91 (Rule 43.6*bis*(a)).
   c. [ ] With regard to any **nucleotide and/or amino acid sequence** disclosed in the international application, see Box No. I.
2. [ ] **Certain claims were found unsearchable** (See Box No. II)
3. [ ] **Unity of invention is lacking** (see Box No III)
4. With regard to the **title**,
   [X] the text is approved as submitted by the applicant
   [ ] the text has been established by this Authority to read as follows:
5. With regard to the **abstract**,
   [X] the text is approved as submitted by the applicant
   [ ] the text has been established, according to Rule 38.2(b), by this Authority as it appears in Box No. IV. The applicant may, within one month from the date of mailing of this international search report, submit comments to this Authority
6. With regard to the **drawings**,
   a. the figure of the **drawings** to be published with the abstract is Figure No. 5
      [X] as suggested by the applicant
      [ ] as selected by this Authority, because the applicant failed to suggest a figure
      [ ] as selected by this Authority, because this figure better characterizes the invention
   b. [ ] none of the figures is to be published with the abstract

INTERNATIONAL SEARCH REPORT

International application No
PCT/US2010/036588

A. CLASSIFICATION OF SUBJECT MATTER
INV. G06T3/40 G06T5/50
ADD.

According to International Patent Classification (IPC) or to both national classification and IPC

B. FIELDS SEARCHED

Minimum documentation searched (classification system followed by classification symbols)
G06T

Documentation searched other than minimum documentation to the extent that such documents are included in the fields searched

Electronic data base consulted during the international search (name of data base and, where practical, search terms used)

EPO-Internal, INSPEC, IBM-TDB, WPI Data

C. DOCUMENTS CONSIDERED TO BE RELEVANT

Category*	Citation of document, with indication, where appropriate, of the relevant passages	Relevant to claim No.
A	US 2009/028463 A1 (PUTMAN MATTHEW C [US] ET AL) 29 January 2009 (2009-01-29) cited in the application the whole document -----	1-13
A	US 2007/171284 A1 (POSAMENTIER JOSHUA [US]) 26 July 2007 (2007-07-26) cited in the application the whole document -----	1-13

-/--

[X] Further documents are listed in the continuation of Box C.

[X] See patent family annex.

* Special categories of cited documents :

"A" document defining the general state of the art which is not considered to be of particular relevance
"E" earlier document but published on or after the international filing date
"L" document which may throw doubts on priority claim(s) or which is cited to establish the publication date of another citation or other special reason (as specified)
"O" document referring to an oral disclosure, use, exhibition or other means
"P" document published prior to the international filing date but later than the priority date claimed

"T" later document published after the international filing date or priority date and not in conflict with the application but cited to understand the principle or theory underlying the invention
"X" document of particular relevance; the claimed invention cannot be considered novel or cannot be considered to involve an inventive step when the document is taken alone
"Y" document of particular relevance; the claimed invention cannot be considered to involve an inventive step when the document is combined with one or more other such documents, such combination being obvious to a person skilled in the art.
"&" document member of the same patent family

Date of the actual completion of the international search	Date of mailing of the international search report
24 August 2010	03/09/2010
Name and mailing address of the ISA/ European Patent Office, P.B. 5818 Patentlaan 2 NL - 2280 HV Rijswijk Tel. (+31-70) 340-2040, Fax: (+31-70) 340-3016	Authorized officer Herter, Jochen

2

Form PCT/ISA/210 (second sheet) (April 2005)

INTERNATIONAL SEARCH REPORT

International application No
PCT/US2010/036588

C(Continuation). DOCUMENTS CONSIDERED TO BE RELEVANT

Category*	Citation of document, with indication, where appropriate, of the relevant passages	Relevant to claim No.
A	TEKALP A M ET AL: "High-resolution image reconstruction from lower-resolution image sequences and space-varying image restoration" SPEECH PROCESSING 1. SAN FRANCISCO, MAR. 23 - 26, 1992; [PROCEEDINGS OF THE INTERNATIONAL CONFERENCE ON ACOUSTICS, SPEECH AND SIGNAL PROCESSING (ICASSP)], NEW YORK, IEEE, US LNKD-DOI:10.1109/ICASSP.1992.226249, vol. 3, 23 March 1992 (1992-03-23), pages 169-172, XP010058997 ISBN: 978-0-7803-0532-8 cited in the application the whole document -----	1-13
A	BORMAN S ET AL: "Super-resolution from image sequences-a review" 1998 MIDWEST SYMPOSIUM ON CIRCUITS AND SYSTEMS (CAT. NO. 98CB36268) IEEE COMPUT. SOC LOS ALAMITOS, CA, USA, 1999, pages 374-378, XP002597490 ISBN: 0-8186-8914-5 cited in the application the whole document -----	1-13
A	VERMOLEN B J ET AL: "3D restoration with multiple images acquired by a modified conventional microscope." MICROSCOPY RESEARCH AND TECHNIQUE 1 JUN 2004 LNKD- PUBMED:15352082, vol. 64, no. 2, 1 June 2004 (2004-06-01), pages 113-125, XP002597491 ISSN: 1059-910X the whole document -----	1-13
A	US 2008/019479 A1 (BERNHARDT PHILIPP [DE] ET AL) 24 January 2008 (2008-01-24) * abstract; figures 1,2 paragraph [0024] - paragraph [0043] paragraph [0052] - paragraph [0095] -----	1-13
A	EP 1 746 816 A1 (CIRCLE PROMOTION SCIENCE & ENG [JP]) 24 January 2007 (2007-01-24) * abstract; figures 1-21 paragraph [0007] - paragraph [0010] paragraph [0013] - paragraph [0091] -----	1-13

-/--

2

INTERNATIONAL SEARCH REPORT

International application No
PCT/US2010/036588

C(Continuation). DOCUMENTS CONSIDERED TO BE RELEVANT

Category*	Citation of document, with indication, where appropriate, of the relevant passages	Relevant to claim No.
A	BEN-EZRA M ET AL: "Video Super-Resolution Using Controlled Subpixel Detector Shifts" IEEE TRANSACTIONS ON PATTERN ANALYSIS AND MACHINE INTELLIGENCE, IEEE SERVICE CENTER, LOS ALAMITOS, CA, US LNKD- DOI:10.1109/TPAMI.2005.129, vol. 27, no. 6, 1 June 2005 (2005-06-01), pages 977-987, XP011132801 ISSN: 0162-8828 the whole document -----	1-13

2

Form PCT/ISA/210 (continuation of second sheet) (April 2005)

INTERNATIONAL SEARCH REPORT

Information on patent family members

International application No
PCT/US2010/036588

Patent document cited in search report	Publication date	Patent family member(s)	Publication date
US 2009028463 A1	29-01-2009	WO 2009014648 A2	29-01-2009
US 2007171284 A1	26-07-2007	NONE	
US 2008019479 A1	24-01-2008	DE 102006006451 A1	16-08-2007
EP 1746816 A1	24-01-2007	JP 4172416 B2	29-10-2008
		JP 2005311755 A	04-11-2005
		WO 2005104524 A1	03-11-2005
		US 2007035621 A1	15-02-2007

PATENT COOPERATION TREATY

From the
INTERNATIONAL SEARCHING AUTHORITY

To:

see form PCT/ISA/220

PCT

WRITTEN OPINION OF THE INTERNATIONAL SEARCHING AUTHORITY

(PCT Rule 43*bis*.1)

Date of mailing
(day/month/year) see form PCT/ISA/210 (second sheet)

Applicant's or agent's file reference
see form PCT/ISA/220

FOR FURTHER ACTION
See paragraph 2 below

International application No.	International filing date *(day/month/year)*	Priority date *(day/month/year)*
PCT/US2010/036588	28.05.2010	29.05.2009

International Patent Classification (IPC) or both national classification and IPC
INV. G06T3/40 G06T5/50

Applicant
NANOTRONICS, INC.

1. This opinion contains indications relating to the following items:

- ☒ Box No. I Basis of the opinion
- ☐ Box No. II Priority
- ☐ Box No. III Non-establishment of opinion with regard to novelty, inventive step and industrial applicability
- ☐ Box No. IV Lack of unity of invention
- ☒ Box No. V Reasoned statement under Rule 43*bis*.1(a)(i) with regard to novelty, inventive step and industrial applicability; citations and explanations supporting such statement
- ☐ Box No. VI Certain documents cited
- ☒ Box No. VII Certain defects in the international application
- ☐ Box No. VIII Certain observations on the international application

2. **FURTHER ACTION**

If a demand for international preliminary examination is made, this opinion will usually be considered to be a written opinion of the International Preliminary Examining Authority ("IPEA") except that this does not apply where the applicant chooses an Authority other than this one to be the IPEA and the chosen IPEA has notifed the International Bureau under Rule 66.1*bis*(b) that written opinions of this International Searching Authority will not be so considered.

If this opinion is, as provided above, considered to be a written opinion of the IPEA, the applicant is invited to submit to the IPEA a written reply together, where appropriate, with amendments, before the expiration of 3 months from the date of mailing of Form PCT/ISA/220 or before the expiration of 22 months from the priority date, whichever expires later.

For further options, see Form PCT/ISA/220.

3. For further details, see notes to Form PCT/ISA/220.

Name and mailing address of the ISA:	Date of completion of this opinion	Authorized Officer
European Patent Office D-80298 Munich Tel. +49 89 2399 - 0 Fax: +49 89 2399 - 4465	see form PCT/ISA/210	Herter, Jochen Telephone No. +49 89 2399-7478

WRITTEN OPINION OF THE INTERNATIONAL SEARCHING AUTHORITY

International application No.
PCT/US2010/036588

Box No. I Basis of the opinion

1. With regard to the **language**, this opinion has been established on the basis of:

   ☒ the international application in the language in which it was filed

   ☐ a translation of the international application into , which is the language of a translation furnished for the purposes of international search (Rules 12.3(a) and 23.1 (b)).

2. ☐ This opinion has been established taking into account the **rectification of an obvious mistake** authorized by or notified to this Authority under Rule 91 (Rule 43bis.1(a))

3. With regard to any **nucleotide and/or amino acid sequence** disclosed in the international application, this opinion has been established on the basis of a sequence listing filed or furnished:

   a. (means)

   ☐ on paper

   ☐ in electronic form

   b. (time)

   ☐ in the international application as filed

   ☐ together with the international application in electronic form

   ☐ subsequently to this Authority for the purposes of search

4. ☐ In addition, in the case that more than one version or copy of a sequence listing has been filed or furnished, the required statements that the information in the subsequent or additional copies is identical to that in the application as filed or does not go beyond the application as filed, as appropriate, were furnished.

5. Additional comments:

Box No. V Reasoned statement under Rule 43*bis*.1(a)(i) with regard to novelty, inventive step or industrial applicability; citations and explanations supporting such statement

1. Statement

Novelty (N)	Yes:	Claims	1-13
	No:	Claims	
Inventive step (IS)	Yes:	Claims	1-13
	No:	Claims	
Industrial applicability (IA)	Yes:	Claims	1-13
	No:	Claims	

2. Citations and explanations

   see separate sheet

Box No. VII Certain defects in the international application

The following defects in the form or contents of the international application have been noted:

see separate sheet

1 Reference is made to the following documents:

D1 US 2009/028463 A1 (Putman et al.) 29 January 2009 cited in the application

D5 VERMOLEN B J ET AL: "3D restoration with multiple images acquired by a modified conventional microscope."MICROSCOPY RESEARCH AND TECHNIQUE 1 JUN 2004 LNKD- PUBMED: 15352082, vol. 64, no. 2, 1 June 2004 (2004-06-01) , pages 113-125, XP002597491ISSN: 1059-910X

D7 EP 1 746 816 A1 (CIRCLE PROMOTION SCIENCE & ENG [JP]) 24 January 2007 (2007-01-24)

D8 BEN-EZRA M ET AL: "Video Super-Resolution Using Controlled Subpixel Detector Shifts"IEEE TRANSACTIONS ON PATTERN ANALYSIS AND MACHINE INTELLIGENCE, IEEE SERVICE CENTER, LOS ALAMITOS, CA, US LNKD- DOI:10.1109/TPAMI. 2005.129, vol. 27, no. 6, 1 June 2005 (2005-06-01) , pages 977-987, XP011132801ISSN: 0162-8828

2 **Item V: Reasoned statement with regard to novelty, inventive step or industrial applicability; citations and explanations supporting such statement**

The present application meets the requirements of Articles 33(2) and 33(3) PCT because the subject matter of claim 1 is novel and involves an inventive step, the reasons being as follows:

As to claim 1:

2.1 D1, cited by the applicant is considered the closest prior art for the present case and discloses:

- A method for using an image sensor to obtain an image of a specimen focused thereon, such that the resolution of the image obtained is greater than the designed resolution of the image sensor (see abstract, lines 1-5);

- an image sensor having multiple pixels (see abstract, lines 4-5);

- focusing the specimen onto the image sensor (see abstract, lines 4-5);

- recording an image of the specimen in the first position (see abstract, lines 11-15);

- moving the specimen to a second position relative to the image sensor (see abstract, lines 5-8);

- recording an image of the specimen in the second position (see abstract, lines 11-15);

2.2 D1, however, fails to disclose the feature of a known background with all the specific processing tied thereto and therefore D1 does not disclose the steps of:

- (A) placing a specimen onto a known background within the field of view of an image sensor having multiple pixels;

- (B) focusing the specimen onto the image sensor in a first position relative thereto such that the known background is also focused on the image sensor;

- (C) recording an image of the specimen and the known background focused on the image sensor in the first position and establishing a specimen region and background pixels from the image recorded;

- (D) moving the specimen to a second position relative to the image sensor so as to place a first portion of the specimen region within a target background pixel chosen from said background pixels established in said step of recording;

- (E) recording an image of the specimen and the known background focused on the image sensor in the second position; and

- (F) calculating the bit depth of the portion of the specimen region moved into the target background pixel.

2.3 D1 merely determines sub-pixel values (for subsequent superresolution processing) by performing controlled sensor shifts leading to a subpixel displacement of the sensor image. Determining the bit depth of the moved specimen region from the changed background pixels is neither disclosed nor rendered obvious by D1 or by any of the other available prior art presently on file.

2.4 An inventive step is therefore acknowledged.

3 **Item VII: Certain defects in the international application**

3.1 The independent claims are not in the two-part form in accordance with Rule 6.3(b) PCT, which in the present case would be appropriate, with those features known in combination from the prior art (document D1) being placed in the preamble (Rule 6.3(b)(i) PCT) and with the remaining features being included in the characterising part (Rule 6.3(b)(ii) PCT).

3.2 The features of the claims are not provided with reference signs placed in parentheses (Rule 6.2(b) PCT).

3.3 Contrary to Rule 6.2(b) PCT claim 2 contains a symbol "(el)" put in parentheses which is not considered a reference sign.

3.4 Contrary to the requirements of Rule 5.1(a)(ii) PCT, the relevant background art disclosed in the documents D5, D7 and D8 is not mentioned in the description, nor are these documents identified therein.

Possible steps after receipt of the international search report (ISR) and written opinion of the International Searching Authority (WO-ISA)

General information	For all international applications filed on or after 01/01/2004 the competent ISA will establish an ISR. It is accompanied by the WO-ISA. Unlike the former written opinion of the IPEA (Rule 66.2 PCT), the WO-ISA is not meant to be responded to, but to be taken into consideration for further procedural steps. This document explains about the possibilities.
Amending claims under Art. 19 PCT	Within 2 months after the date of mailing of the ISR and the WO-ISA the applicant may file amended claims under Art. 19 PCT directly with the International Bureau of WIPO. The PCT reform of 2004 did not change this procedure. For further information please see Rule 46 PCT as well as form PCT/ISA/220 and the corresponding Notes to form PCT/ISA/220.
Filing a demand for international preliminary examination	In principle, the WO-ISA will be considered as the written opinion of the IPEA. This should, in many cases, make it unnecessary to file a demand for international preliminary examination. If the applicant nevertheless wishes to file a demand this must be done before expiry of 3 months after the date of mailing of the ISR/WO-ISA or 22 months after priority date, whichever expires later (Rule 54bis PCT). Amendments under Art. 34 PCT can be filed with the IPEA as before, normally at the same time as filing the demand (Rule 66.1 (b) PCT). If a demand for international preliminary examination is filed and no comments/amendments have been received the WO-ISA will be transformed by the IPEA into an IPRP (International Preliminary Report on Patentability) which would merely reflect the content of the WO-ISA. The demand can still be withdrawn (Art. 37 PCT).
Filing informal comments	After receipt of the ISR/WO-ISA the applicant may file informal comments on the WO-ISA directly with the International Bureau of WIPO. These will be communicated to the designated Offices together with the IPRP (International Preliminary Report on Patentability) at 30 months from the priority date. Please also refer to the next box.
End of the international phase	At the end of the international phase the International Bureau of WIPO will transform the WO-ISA or, if a demand was filed, the written opinion of the IPEA into the IPRP, which will then be transmitted together with possible informal comments to the designated Offices. The IPRP replaces the former IPER (international preliminary examination report).
Relevant PCT Rules and more information	Rule 43 PCT, Rule 43bis PCT, Rule 44 PCT, Rule 44bis PCT, PCT Newsletter 12/2003, OJ 11/2003, OJ 12/2003

Bitte beachten Sie, dass angeführte Nichtpatentliteratur (wie z. B. wissenschaftliche oder technische Dokumente) je nach geltendem Recht dem Urheberrechtsschutz und/oder anderen Schutzarten für schriftliche Werke unterliegen könnte. Die Vervielfältigung urheberrechtlich geschützter Texte, ihre Verwendung in anderen elektronischen oder gedruckten Publikationen und ihre Weitergabe an Dritte ist ohne ausdrückliche Zustimmung des Rechtsinhabers nicht gestattet.

Veuillez noter que les ouvrages de la littérature non-brevets qui sont cités, par exemple les documents scientifiques ou techniques, etc., peuvent être protégés par des droits d'auteur et/ou toute autre protection des écrits prévue par les législations applicables. Les textes ainsi protégés ne peuvent être reproduits ni utilisés dans d'autres publications électroniques ou imprimées, ni rediffusés sans l'autorisation expresse du titulaire du droit d'auteur.

Please be aware that cited works of non-patent literature such as scientific or technical documents or the like may be subject to copyright protection and/or any other protection of written works as appropriate based on applicable laws. Copyrighted texts may not be copied or used in other electronic or printed publications or re-distributed without the express permission of the copyright holder.

XS CPRTENFRDE

BNSDOCID: <XS____2006100103CF_I_>

CLAIMS

What is claimed is:

1. A method for using an image sensor to obtain an image of a specimen focused thereon, such that the resolution of the image obtained is greater than the designed resolution of the image sensor, the method comprising the steps of:

placing a specimen onto a known background within the field of view of an image sensor having multiple pixels;

focusing the specimen onto the image sensor in a first position relative thereto such that the known background is also focused on the image sensor;

recording an image of the specimen and the known background focused on the image sensor in the first position and establishing a specimen region and background pixels from the image recorded;

moving the specimen to a second position relative to the image sensor so as to place a first portion of the specimen region within a target background pixel chosen from said background pixels established in said step of recording;

recording an image of the specimen and the known background focused on the image sensor in the second position; and

calculating the bit depth of the portion of the specimen region moved into the target background pixel.

2. The method of claim 1, wherein the target background pixel has dimensions H by L, and, in said step of moving, the first portion of the specimen region moved into the target background pixel has dimensions h by l (el), wherein h is less than H and l is less than L.

3. The method of claim 2, wherein, in said step of calculating, the bit depth of the first portion of the specimen region moved into the target background

pixel is denoted as "S1" and is calculated according to the formula: $S1 = \{V*(H*L) - ((H*L) - (h*l))*B\} / (H*L)$, wherein:

V is the bit depth of the target background pixel in the image taken in said step of recording an image of the specimen in the second position, and

B is the bit depth of the known background.

4. The method of claim 3, wherein H/h is an integer and L/l is an integer.

5. The method of claim 1, further comprising the steps of:

moving the specimen to a third position relative to the image sensor so as to place an second portion of the specimen region within a target background pixel, wherein the target background pixel in this step of moving to a third position may be the same as or different from the target background pixel of the prior step of moving to a second position;

recording an image of the specimen and the known background focused on the image sensor in the third position; and

calculating the bit depth of the additional portion of the specimen region moved into the target background pixel in the third position.

6. The method of claim 5, wherein said steps of moving, recording and calculating are repeated, with each additional movement step placing a subsequent new portion of the specimen region within a target background pixel, such that a bit depth is calculated for all portions of the specimen region.

7. The method of claim 6, wherein, in said step of placing, the specimen is bounded on two adjacent sides by the known background, and the specimen and adjacent background are in the field of view of the image sensor.

8. The method of claim 7, wherein the target background pixel has dimensions H by L, and, in said steps of moving, the specimen is moved incrementally to place sub-pixel portions of the specimen region into the target

background pixel, wherein the sub-pixel portions are defined by dimensions H/z and L/w, with w and z being integers selected based on the desired size of a sub-pixel, and w*z defines the increase in resolution.

9. The method of claim 8, wherein said steps of moving, recording and calculating are repeated, with each additional movement step placing an additional sub-pixel portion of the specimen region within a target background pixel, such that a bit depth is calculated for all portions of the specimen region.

10. The method of claim 8, wherein, in said steps of moving, said specimen is moved z steps in the H direction as defined by the target background pixel and, for each such step, is moved w steps in the L direction defined by the target background pixel, such that there are performed w*z steps of moving, recording and calculating.

11. The method of claim 10, the target background pixel is the same pixel for all steps of moving.

12. The method of claim 1, wherein the pixels of the image sensor are binned, and the establishment of the background pixels and the specimen region is based on the binned pixel dimensions.

13. The method of claim 1, wherein, after said step of calculating the bit depth, the method further comprises the step of producing a new image attributing the bit depth calculated in said step of calculating to that portion of the specimen region moved into the target background pixel in said step of moving the specimen to a second position.

UNITED STATES PATENT AND TRADEMARK OFFICE

UNITED STATES DEPARTMENT OF COMMERCE
United States Patent and Trademark Office
Address: COMMISSIONER FOR PATENTS
P.O. Box 1450
Alexandria, Virginia 22313-1450
www.uspto.gov

APPLICATION NO.	FILING DATE	FIRST NAMED INVENTOR	ATTORNEY DOCKET NO.	CONFIRMATION NO.
12/474,994	05/29/2009	Matthew C. Putman	NNT.P.2	2631

26360 7590 04/07/2011
RENNER KENNER GREIVE BOBAK TAYLOR & WEBER
FIRST NATIONAL TOWER, SUITE 400
106 SOUTH MAIN STREET
AKRON, OH 44308-1412

EXAMINER
MEHTA, BHAVESH M

ART UNIT	PAPER NUMBER
2624	

MAIL DATE	DELIVERY MODE
04/07/2011	PAPER

Please find below and/or attached an Office communication concerning this application or proceeding.

The time period for reply, if any, is set in the attached communication.

UNITED STATES PATENT AND TRADEMARK OFFICE

Commissioner for Patents
United States Patent and Trademark Office
P.O. Box 1450
Alexandria, VA 22313-1450
www.uspto.gov

RENNER KENNER GREIVE BOBAK TAYLOR & WEBER
FIRST NATIONAL TOWER, SUITE 400
106 SOUTH MAIN STREET
AKRON OH 44308-1412

In re Application of	:	
PUTMAN, MATTHEW C. et al.	:	DECISION ON REQUEST TO
Application No. 12/474,994	:	PARTICIPATE IN PATENT
Filed: May 29, 2009	:	PROSECUTION HIGHWAY
Attorney Docket No. **NNT.P.2**	:	PROGRAM AND PETITION
	:	TO MAKE SPECIAL UNDER
	:	37 CFR 1.102(a)

This is a decision on the renewed request to participate in the PCT Patent Prosecution Highway (PPH) pilot program and the petition under 37 CFR 1.102(a), filed February 10, 2011 to make the above-identified application special.

The request and petition are **GRANTED**.

A grantable request to participate in the PCT-PPH pilot program and petition to make special require:

(1) The U.S. application be (a) a national stage entry of the corresponding PCT application, or (b) a national stage entry of another PCT application which claims priority to the corresponding PCT application, or (c) a national stage application that claims domestic/foreign priority to the corresponding PCT application, (d) a national application which forms the basis for the priority claim in the corresponding PCT application, or (e) a continuation application of the U.S. application which satisfies one of the above (a) to (d) scenarios.
(2) A copy of the latest international work product (WO/ISA, WO/IPEA, or IPER) in the corresponding PCT application(s) which indicates at least one claim in the PCT application has novelty, inventive step, and industrial applicability.
(3) A copy of all claims which were indicated as having novelty, inventive step and industrial applicability in the corresponding PCT application(s).
(4) English translations of the documents in (2) and (3) (if the documents are not in the English language).
(5) All the claims in the U.S. application must sufficiently correspond or be amended to sufficiently correspond to the claims which were indicated as having novelty, inventive step, and industrial applicability in the corresponding PCT application(s).
(6) Examination of the U.S. application has not begun; and

(7) An information disclosure statement listing the documents cited in the international work products (ISR, WO/ISA, WO/IPEA, IPER) of the corresponding PCT application(s).

The request to participate in the PCT-PPH pilot program and petition comply with the above requirements. Accordingly, the above-identified application has been accorded "special" status.

Telephone inquiries concerning this decision should be directed to Daniel Swerdlow at 571-272-7531.

All other inquiries concerning the examination or status of the application should be directed to Patent Application Information Retrieval (PAIR) system.

The application is undergoing pre-examination processing. Once it is released for examination, the application will be forwarded to the examiner for action on the merits commensurate with this decision.

/ Daniel Swerdlow /

Daniel Swerdlow
Quality Assurance Specialist
Technology Center 2600
Communications

UNITED STATES PATENT AND TRADEMARK OFFICE

Commissioner for Patents
United States Patent and Trademark Office
P.O. Box 1450
Alexandria, VA 22313-1450
www.uspto.gov

BALLARD SPAHR LLP
SUITE 1000
999 PEACHTREE STREET
ATLANTA GA 30309-3915

MAILED

AUG 30 2011

OFFICE OF PETITIONS

In re Application of
Andrew B. Sacks et al.
Application No. 12/475,003
Filed: May 29, 2009
Attorney Docket No.: 01305.0001U1

DECISION ON PETITION

This is a decision on the petition filed August 12, 2011 under 37 CFR 1.181 to withdraw the holding of abandonment of the above-identified application.

The petition under 37 CFR 1.181 is GRANTED.

The above-referenced application was held abandoned on April 26, 2011, for failure to file a timely response to the Requirement for Election/Restriction mailed on March 24, 2011 and which set the longer of one month or 30 days for reply. Accordingly, a Notice of Abandonment was mailed August 10, 2011.

Petitioner argues that the period for response with extensions of time pursuant to 37 CFR 1.136(a) has not lapsed and thus the Abandonment and Notice of Abandonment are premature.

Under the provisions of 37 CFR 1.136(a), an extension of time up to five months could be obtained making the response due date not later than September 24, 2011 as claimed by petitioner. As the period for extensions had not expired, the application is not abandoned and the Notice of Abandonment was mailed prematurely.

In view thereof, the Notice of Abandonment was sent in error and is hereby withdrawn. No fee for the petition to withdraw the holding of abandonment is due and none has been charged.

This matter is being referred to Technology Center 1746 for further examination in due course.

Telephone inquiries concerning this matter may be directed to the undersigned Petitions Attorney at (571) 272-3212.

Patricia Faison-Ball

Patricia Faison-Ball
Senior Petitions Attorney
Office of Petitions

UNITED STATES PATENT AND TRADEMARK OFFICE

Commissioner for Patents
United States Patent and Trademark Office
P.O. Box 1450
Alexandria, VA 22313-1450
www.uspto.gov

MAILED
AUG 3 1 2011
OFFICE OF PETITIONS

SUGHRUE MION, PLLC
2100 PENNSYLVANIA AVENUE, N.W.
SUITE 800
WASHINGTON DC 20037

In re Application of	:	
Takayuki Sakurai	:	
Application No. 12/475,022	:	DECISION GRANTING PETITION
Filed: May 29, 2009	:	UNDER 37 CFR 1.313(c)(2)
Attorney Docket No. Q113407	:	

This is a decision on the petition under 37 CFR 1.313(c)(2), filed August 30, 2011, to withdraw the above-identified application from issue after payment of the issue fee.

The petition is **GRANTED**.

The above-identified application is withdrawn from issue for consideration of a submission under 37 CFR 1.114 (request for continued examination). *See* 37 CFR 1.313(c)(2).

Petitioner is advised that the issue fee paid on August 2, 2011 cannot be refunded. If, however, this application is again allowed, petitioner may request that it be applied towards the issue fee required by the new Notice of Allowance.[1]

Telephone inquiries should be directed to the undersigned at (571) 272-3208.

This application is being referred to Technology Center AU 3742 for processing of the request for continued examination under 37 CFR 1.114 and for consideration of the concurrently filed IDS.

/Karen Creasy/
Karen Creasy
Petitions Examiner
Office of Petitions

[1] *The request to apply the issue fee to the new Notice may be satisfied by completing and returning the new Part B – Fee(s) Transmittal Form (along with any balance due at the time of submission). Petitioner is advised that the Issue Fee Transmittal Form* ***must*** *be completed and timely submitted to avoid abandonment of the application.*

UNITED STATES PATENT AND TRADEMARK OFFICE

Commissioner for Patents
United States Patent and Trademark Office
P.O. Box 1450

MAILED
NOV 21 2011
OFFICE OF PETITIONS

THE BLACK & DECKER CORPORATION
701 EAST JOPPA ROAD, TW199
TOWSON MD 21286

In re Application of	:	
Michael KUNZ et al.	:	ON PETITION
Application No. 12/475,039	:	
Filed: May 29, 2009	:	
Atty. Docket No.: US-PR-1259		

This is in response to the communication filed October 31, 2011 to withdraw the holding of abandonment of the above-identified application, which is being treated as a petition under 37 CFR 1.8(b).

The petition is **GRANTED**.

Petitioner requests the Notice of Abandonment mailed September 23, 2011 for failure to respond to the Notice of Allowance and Fee(s) Due mailed June 10, 2011 be withdrawn as petitioner timely filed a response. Petitioner has included a copy of the response filed bearing a certificate of transmission dated August 12, 2011.

The file record does not include the originally submitted papers. Failure to receive correspondence which includes a certificate of mailing or transmission is addressed in 37 CFR 1.8(b), reproduced below:

> In the event that correspondence is considered timely filed by being mailed or transmitted in accordance with paragraph (a) of this section, but not received in the U.S. Patent and Trademark Office after a reasonable amount of time has elapsed from the time of mailing or transmitting of the correspondence, or after the application is held to be abandoned, or after the proceeding is dismissed, terminate, or decided with prejudice, the correspondence will be considered timely if the party who forwarded such correspondence:
>
> > (1) Informs the Office of the previous mailing or transmission of the correspondence promptly after becoming aware that the Office has no evidence of receipt of the correspondence;
> >
> > (2) Supplies an additional copy of the previously mailed or transmitted correspondence and certificate; and

(3) Includes a statement which attests on a personal knowledge basis or to the satisfaction of the Director to the previous timely mailing or transmission. If the correspondence was sent by facsimile transmission, a copy of the sending unit's report confirming transmission may be used to support this statement.

The petition satisfies the above requirements of 37 CFR 1.8(b). Accordingly, the holding of abandonment for failure to timely file a reply to the Notice of Allowance of June 6, 2011 is hereby withdrawn and the application restored to pending status.

The copy of the reply received with the petition will be accepted in place of the reply shown to have been transmitted by facsimile on August 12, 2011.

In accordance with petitioner's instructions, the issue and publication fees of $1810 will be charged to petitioner's deposit account 02-0548.

Telephone inquires regarding this decision should be directed to Robert DeWitty, Petitions Attorney, Office of Petitions (571-272-8427).

This application is being referred to Office of Data Management.

Ramesh Krishnamurthy

Ramesh Krishnamurthy
Petitions Examiner
Office of Petitions

UNITED STATES PATENT AND TRADEMARK OFFICE

UNITED STATES DEPARTMENT OF COMMERCE
United States Patent and Trademark Office
Address: COMMISSIONER FOR PATENTS
P.O. Box 1450
Alexandria, Virginia 22313-1450
www.uspto.gov

APPLICATION NO.	FILING DATE	FIRST NAMED INVENTOR	ATTORNEY DOCKET NO.	CONFIRMATION NO.
12/475,090	05/29/2009	Shigenori KOZAI	24108	2811

7590 03/24/2011
SCULLY SCOTT MURPHY & PRESSER, PC
400 GARDEN CITY PLAZA
SUITE 300
GARDEN CITY, NY 11530

EXAMINER
CASLER, BRIAN L

ART UNIT	PAPER NUMBER
3737	

MAIL DATE	DELIVERY MODE
03/24/2011	PAPER

DECISION GRANTING PETITION UNDER 37 CFR 1.138(d)

The declaration of express abandonment is recognized

This is in response to the petition under 37 CFR 1.138(d), requesting for a refund of any previously paid search fee and excess claims fee in the above-identified application.

The petition is granted.

The express abandonment is recognized. Any previously paid search fee and excess claims fee are hereby refunded.

Telephone inquiries should be directed to the Office of Data Management at (571) 272-4200.

Mimi Farmer

Patent Publication Branch
Office of Data Management

FORM PET651G (Rev. 08/07)

UNITED STATES PATENT AND TRADEMARK OFFICE

UNITED STATES DEPARTMENT OF COMMERCE
United States Patent and Trademark Office
Address: COMMISSIONER FOR PATENTS
P.O. Box 1450
Alexandria, Virginia 22313-1450
www.uspto.gov

APPLICATION NO.	FILING DATE	FIRST NAMED INVENTOR	ATTORNEY DOCKET NO.	CONFIRMATION NO.
12/475,100	05/29/2009	Minoru Yamamoto	1924.84809	2831

7590 09/10/2010

GREER, BURNS & CRAIN
300 S WACKER DR
25TH FLOOR
CHICAGO, IL 60606

EXAMINER
GHAYOUR, MOHAMMAD H

ART UNIT	PAPER NUMBER
2611	

MAIL DATE	DELIVERY MODE
09/10/2010	PAPER

DECISION GRANTING PETITION UNDER 37 CFR 1.138(d)

The declaration of express abandonment is recognized

This is in response to the petition under 37 CFR 1.138(d), requesting for a refund of any previously paid search fee and excess claims fee in the above-identified application.

The petition is granted.

The express abandonment is recognized. Any previously paid search fee and excess claims fee are hereby refunded.

Telephone inquiries should be directed to the Office of Data Management at (571) 272-4200.

Betty Powell

Patent Publication Branch
Office of Data Management

FORM PET651G (Rev. 08/07)

UNITED STATES PATENT AND TRADEMARK OFFICE

UNITED STATES DEPARTMENT OF COMMERCE
United States Patent and Trademark Office
Address: COMMISSIONER FOR PATENTS
P.O. Box 1450
Alexandria, Virginia 22313-1450
www.uspto.gov

APPLICATION NO.	FILING DATE	FIRST NAMED INVENTOR	ATTORNEY DOCKET NO.	CONFIRMATION NO.
12/475,117	05/29/2009	Min Lou	DHS4-46959-US	2863

87884 7590 05/13/2011
Mossman, Kumar and Tyler, PC
P.O. Box 421239
Houston, TX 77242

EXAMINER
BREIER, KRYSTINE E

ART UNIT	PAPER NUMBER
3663	

NOTIFICATION DATE	DELIVERY MODE
05/13/2011	ELECTRONIC

Please find below and/or attached an Office communication concerning this application or proceeding.

The time period for reply, if any, is set in the attached communication.

Notice of the Office communication was sent electronically on above-indicated "Notification Date" to the following e-mail address(es):

docket@mktlaw.us.com
tthigpen@mktlaw.us.com

UNITED STATES PATENT AND TRADEMARK OFFICE

Commissioner for Patents
United States Patent and Trademark Office
P.O. Box 1450
Alexandria, VA 22313-1450
www.uspto.gov

MAY 13 2011

MOSSMAN, KUMAR AND TYLER, PC
P.O. BOX 425139
Houston, TX 77242

In re Application of Min Lou et al Application No. 12/475,117 Filed: May 29, 2009 For: VECTOR MIGRATION OF VIRTUAL SOURCE VSP DATA	: : : :	PETITION TO ACCEPT COLOR DRAWINGS/PHOTOGRAPHS

This is a decision on applicant's petition under 37 CFR 1.184(A)(2) filed June 5, 2009 to accept color drawings/photographs.

For the acceptance of color drawings in accordance with 37 CFR 1.184(A)(2), a petition is required which fulfills the following requirements:

(i) The appropriate fee set forth in 1.17(h),
(ii) three (3) sets of color drawings/photographs, and
(iii) amending the specification to contain the following language as the first paragraph in that portion of the specification relating to the brief description of the drawings: "The file of this patent contains at least one drawing executed in color photography. Copies of this patent with color photographs will be provided by the Patent and Trademark Office upon request and payment of necessary fee."

Having met the requirements of 37 CFR 1.184(A)(2), the petition is **GRANTED**.

Any questions or comments with respect to the decision should be forwarded to Supervisory Patent Examiner, Jack Keith at the number listed below.

Jack Keith
Supervisory Patent Examiner
Art Unit 3663
(571) 272-6878

jwk: 5/12/11

UNITED STATES PATENT AND TRADEMARK OFFICE

UNITED STATES DEPARTMENT OF COMMERCE
United States Patent and Trademark Office
Address: COMMISSIONER FOR PATENTS
P.O. Box 1450
Alexandria, Virginia 22313-1450
www.uspto.gov

APPLICATION NO.	FILING DATE	FIRST NAMED INVENTOR	ATTORNEY DOCKET NO.	CONFIRMATION NO.
12/475,160	05/29/2009	Hiroyuki Suto	1924.84818	2952

7590 10/07/2010

GREER, BURNS & CRAIN
300 S WACKER DR
25TH FLOOR
CHICAGO, IL 60606

EXAMINER
LOUIS JACQUES, JACQUES H

ART UNIT	PAPER NUMBER
2112	

MAIL DATE	DELIVERY MODE
10/07/2010	PAPER

DECISION GRANTING PETITION UNDER 37 CFR 1.138(d)

The declaration of express abandonment is recognized

This is in response to the petition under 37 CFR 1.138(d), requesting for a refund of any previously paid search fee and excess claims fee in the above-identified application.

The petition is granted.

The express abandonment is recognized. Any previously paid search fee and excess claims fee are hereby refunded.

Telephone inquiries should be directed to the Office of Data Management at (571) 272-4200.

Nioni Farmer

Patent Publication Branch
Office of Data Management

Adjustment date: 10/07/2010 KFARMER
05/01/2009 INTERSW 00003735 272069 12475160
02 FC:1111 540.00 CR

FORM PET651G (Rev. 08/07)

UNITED STATES PATENT AND TRADEMARK OFFICE

UNITED STATES DEPARTMENT OF COMMERCE
United States Patent and Trademark Office
Address: COMMISSIONER FOR PATENTS
P.O. Box 1450
Alexandria, Virginia 22313-1450
www.uspto.gov

APPLICATION NO.	FILING DATE	FIRST NAMED INVENTOR	ATTORNEY DOCKET NO.	CONFIRMATION NO.
12/475,221	05/29/2009	Gregory I. Frost	33320.03093.US11/3093B	3065

13565 7590 08/04/2011
McKenna Long & Aldridge LLP
4435 Eastgate Mall
Suite 400
San Diego, CA 92121

EXAMINER
CHOWDHURY, IQBAL HOSSAIN

ART UNIT	PAPER NUMBER
1652	

MAIL DATE	DELIVERY MODE
08/04/2011	PAPER

Please find below and/or attached an Office communication concerning this application or proceeding.

The time period for reply, if any, is set in the attached communication.

UNITED STATES PATENT AND TRADEMARK OFFICE

AUG 04 2011

Commissioner for Patents
United States Patent and Trademark Office
P.O. Box 1450
Alexandria, VA 22313-1450
www.uspto.gov

McKenna Long & Aldridge LLP
4435 Eastgate Mall
Suite 400
San Diego CA 92121

In re Application of:
Frost et al.
Serial No.: 12/475,221
Filed: May 29, 2009
Attorney Docket No:
33320.03093.US11/3093B

: PETITION DECISION

This is in response to the petition filed on June 14, 2011 under 3 7 CFR 1.181 to correct the misclassification of submitted Information Disclosure Statements. Specifically, applicants request correction of the classification in PAIR of the Information Disclosure Statements submitted on August 12, 2009; August 20, 2010; and March 28, 2011 in connection with the above-referenced application and consideration by the Examiner of the documents and information contained therein.

Applicants argue the "Information Disclosure Statements were submitted in connection with the above-captioned application on August 12, 2009; August 20, 2010; and March 28, 2011. Each Information Disclosure Statement was prepared in accordance with 37 C.F.R 1.97 and 1.98. As required under 37 C.F.R 1.98, each Information Disclosure Statement contained 1) a list of all patents, publications, applications, or other information submitted for consideration by the Office, including a column that provides a space next to each document to be considered, for the examiner's initials and a heading that clearly indicates that the list is an Information Disclosure Statement; and 2) legible copies of all items listed. The items either were in English or a translation was provided. A copy of the misclassified Information Disclosure Statements filed on August 12, 2009; August 20, 2010; and March 28, 2011 is attached.

The submitted Information Disclosure Statement included a tabular Form PTO-1449, which was classified as an "IDS," and a written disclosure of information. In each instance, the written disclosure of information was misclassified in PAIR as a "Transmittal Letter" August 12, 2009, "Transmittal Letter" of 2 pages; August 20, 2010, "Transmittal Letter" of 2 pages; and March 28, 2011, "Transmittal Letter" of 5 pages). Consequently, the information contained therein may not be considered or reviewed by the Examiner."

Applicants' argument has been accorded careful consideration and is persuasive. PAIR will be corrected to reflect the misclassification of the submitted Information Disclosure Statements of August 12, 2009; August 20, 2010; and March 28, 2011.

DECISION

The petition is **GRANTED.**

The examiner is instructed to consider the IDS of August 12, 2009; August 20, 2010; and March 28, 2011 which was misclassified in PAIR as a "Transmittal Letter" August 12, 2009, "Transmittal Letter" of 2 pages; August 20, 2010, "Transmittal Letter" of 2 pages; and March 28, 2011, "Transmittal Letter" of 5 pages).

Should there be any questions about this decision please contact Marianne C. Seidel, by letter addressed to Director, TC 1600, at the address listed above, or by telephone at 571-272-0584 or by facsimile sent to the general Office facsimile number, 571-273-8300.

/MC Seidel/
Marianne C. Seidel, Quality Assurance Specialist
Technology Center 1600

UNITED STATES PATENT AND TRADEMARK OFFICE

Commissioner for Patents
United States Patent and Trademark Office
P.O. Box 1450
Alexandria, VA 22313-1450
www.uspto.gov

FREESCALE SEMICONDUCTOR, INC.
LAW DEPARTMENT
6501 WILLIAM CANNON DRIVE WEST TX30/OE62
AUSTIN TX 78735

MAILED
JAN 27 2012
OFFICE OF PETITIONS

In re Application of	:	
Min et al.	:	
Application No. 12/475,232	:	DECISION ON PETITION
Filed: May 29, 2009	:	
Attorney Docket No. MT10267ZP	:	

This is a decision on the petition under the unintentional provisions of 37 CFR 1.137(b), filed January 18, 2012, to revive the above-identified application.

The petition is **GRANTED**.

The application became abandoned for failure to reply in a proper and timely manner to the final Office action mailed, June 24, 2011, which set a shortened statutory period for reply of three (3) months. No extensions of time under the provisions of 37 CFR 1.136(a) were obtained. Accordingly, the application became abandoned on September 27, 2011.

The petition satisfies the requirements of 37 CFR 1.137(b) in that petitioner has supplied (1) the reply in the form of a Request for Continued Examination (RCE) and fee of $930.00 and the submission required by 37 CFR 1.114 (previously submitted August 24, 2011); (2) the petition fee of $1,860.00; and (3) a proper statement of unintentional delay.

Telephone inquiries concerning this decision should be directed to the undersigned at (571) 272-7751.

This matter is being referred to Technology Center AU 2813 for processing of the Request for Continued Examination under 37 CFR 1.114 and the Amendment filed August 24, 2011.

/Joan Olszewski/
Joan Olszewski
Petitions Examiner
Office of Petitions

UNITED STATES PATENT AND TRADEMARK OFFICE

Commissioner for Patents
United States Patent and Trademark Office
P.O. Box 1450

CARGILL, INCORPORATED
P.O. Box 5624
MINNEAPOLIS MN 55440-5624

MAILED
OCT 27 2011
OFFICE OF PETITIONS

In re Application of	:	
Jessica ADKINS et al.	:	ON PETITION
Application No. 12/475,233	:	
Filed: May 29, 2009	:	
Atty. Docket No.: 07/0165US01		

This is a decision on the petition under 37 CFR 1.137(b), filed October 17, 2011, to revive the above-identified application.

The petition is **GRANTED.**

The application became abandoned for failure to respond in a timely manner to the Requirement for Restriction/Election mailed April 13, 2011 (Office action), which set a shortened statutory period for reply of one (1) month, or 30 days, whichever was longer. The application became abandoned May 14, 2011. A Notice of Abandonment was mailed October 21, 2011.

The petition satisfies the conditions for revival pursuant to 37 CFR 1.137(b) by including (1) a reply in the form of a Response to the Office action mailed April 13, 2011, (2) a petition fee of $1860, and (3) a statement of unintentional delay. The reply to the Office action is accepted as having been unintentionally delayed.

Telephone inquiries relating to this decision should be directed to Robert DeWitty, Petitions Attorney, Office of Petitions (571-272-8427).

The application will be referred to Technology Center Art Unit 1613 for further consideration of the filed Response.

Robert DeWitty
Petitions Attorney
Office of Petitions

UNITED STATES PATENT AND TRADEMARK OFFICE

UNITED STATES DEPARTMENT OF COMMERCE
United States Patent and Trademark Office
Address: COMMISSIONER FOR PATENTS
P.O. Box 1450
Alexandria, Virginia 22313-1450
www.uspto.gov

APPLICATION NO.	FILING DATE	FIRST NAMED INVENTOR	ATTORNEY DOCKET NO.	CONFIRMATION NO.
12/475,246	05/29/2009	Katsumi Kaga	8073P712	3124

8791 7590 03/28/2011
BLAKELY SOKOLOFF TAYLOR & ZAFMAN LLP
1279 OAKMEAD PARKWAY
SUNNYVALE, CA 94085-4040

EXAMINER
NGUYEN BA, HOANG VU A

ART UNIT	PAPER NUMBER
2421	

MAIL DATE	DELIVERY MODE
03/28/2011	PAPER

Please find below and/or attached an Office communication concerning this application or proceeding.

The time period for reply, if any, is set in the attached communication.

UNITED STATES PATENT AND TRADEMARK OFFICE

Commissioner for Patents
United States Patent and Trademark Office
P.O. Box 1450
Alexandria, VA 22313-1450
www.uspto.gov

BLAKELY SOKOLOFF TAYLOR &
ZAFMAN LLP
1279 OAKMEAD PARKWAY
SUNNYVALE CA 94085-4040

In re Application of: Katsumi Kaga
Application No. 12/475,246
Filed: May 29, 2009
For: DEVICE NAME EDITING APPARATUS AND DEVICE NAME DISPLAY METHOD

DECISION ON REQUEST TO PARTICIPATE IN PATENT PROSECUTION HIGHWAY PROGRAM AND PETITION TO MAKE SPECIAL UNDER 37 CFR 1.102(d)

MAILED

MAR 28 2011

DIRECTOR OFFICE
TECHNOLOGY CENTER 2400

This is a decision on the request to participate in the Patent Prosecution Highway (PPH) program and the renewed petition under 37 CFR 1.102(d), filed January 10, 2011, to make the above-identified application special.

The petition is **GRANTED.**

A grantable request to participate in the PPH program and petition to make special require:

(1) The U.S. application is
(a) a Paris Convention application which either (i) validly claims priority under 35 U.S.C. 119(a) and 37 CFR 1.55 to one or more applications filed in the JPO, or (ii) validly claims priority to a PCT application that contains no priority claims, or
(b) a national stage application under the PCT (an application which entered the national stage in the U.S. from a PCT international application after compliance with 35 U.S.C. 371), which PCT application (i) validly claims priority to an application filed in the JPO, or (ii) validly claims priority to a PCT application that contains no priority claims, or (iii) contains no priority claim, or
(c) a so-called bypass application filed under 35 U.S.C. 111 (a) which validly claims benefit under 35 U.S.C. 120 to a PCT application, which PCT application (i) validly claims priority to an application filed in the JPO, or (ii) validly claims priority to a PCT application that contains no priority claims, or (iii) contains no priority claim.

Where the JPO application that contains the allowable/patentable claims is not the same application for which priority is claimed in the U.S. application, applicant must identify the relationship between the JPO application that contains the allowable/patentable claims and the JPO priority application claimed in the U.S. application;

(2) Applicant must submit a copy of:
a. The allowable/patentable claim(s) from the Japanese application(s);
b. An English translation of the allowable/patentable claim(s), if the claims were published in a language other than English); and
c. A statement that the English translation is accurate;

(3) Applicant must:
a. Ensure that all the claims in the U.S. application sufficiently correspond or be amended to sufficiently correspond to the allowable/patentable claim(s) in the JPO application(s) and
b. Submit a claim correspondence table in English;

(4) Examination of the U.S. application has not begun;

(5) Applicant must submit:
a. A copy of all the office action(s) (which are relevant to patentability), excluding "Decision to Grant a Patent" from each of the Japanese application(s) containing the allowable/patentable claim(s);
b. An English language translation of the JPO office action(s) (if the office action(s) are not in the English language); and
c. A statement that the English translation is accurate;

(6) Applicant must submit:
a. An IDS listing the documents cited by the JPO examiner in the JPO office action (unless already filed in this application); and
b. Copies of all the documents cited in the JPO office action, except U.S. patents or U.S. patent application publications (unless already filed in this application).

The request to participate in the PPH program and petition are found to comply with all the above requirements. Accordingly, the above-identified application has been accorded "special" status.

Telephone inquiries concerning this decision should be directed to Christopher Grant at 571-272-7294.

All other inquiries concerning the examination or status of the application is accessible in the PAIR system at http://www.uspto.gov/ebc/index.html.

The application is being forwarded to the examiner for action on the merits commensurate with this decision.

/Christopher Grant/

Christopher Grant
Quality Assurance Specialist
Technology Center 2400

UNITED STATES PATENT AND TRADEMARK OFFICE

Commissioner for Patents
United States Patent and Trademark Office
P.O. Box 1450
Alexandria, VA 22313-1450
www.uspto.gov

MAILED
SEP 27 2011
OFFICE OF PETITIONS

BIRCH STEWART KOLASCH & BIRCH
PO BOX 747
FALLS CHURCH VA 22040-0747

In re Application of	:	
Hanatani, et al.	:	
Application No. 12/475,249	:	ON PETITION
Filed: May 29, 2009	:	
Attorney Docket No. 3939-0201PUS1	:	

This is a decision on the petition under the unintentional provisions of 37 CFR 1.137(b), filed September 16, 2011, to revive the above-identified application.

The petition is GRANTED.

The application became abandoned September 9, 2011 for failure to timely submit a proper reply to the final Office action mailed March 8, 2011. A petition for three month extension of time for reply was filed. This decision precedes Notice of Abandonment.

A grantable petition pursuant to 37 C.F.R. § 1.137(b) must be accompanied by: (1) the required reply to the outstanding Office action or notice, unless previously filed; (2) the petition fee as set forth in 37 C.F.R. § 1.17(m); (3) a statement that the entire delay in filing the required reply from the due date for the reply until the filing of a grantable petition pursuant to 37 C.F.R. § 1.137(b) was unintentional; and (4) any terminal disclaimer (and fee set forth in 37 C.F.R. § 1.20(d)) required pursuant to 37 C.F.R. § 1.137(c).

The petition satisfies the requirements of 37 CFR 1.137(b) in that petitioner has supplied (1) the reply in the form of a Request for Continued Examination (RCE), including fee and submission required by 37 CFR 1.114; (2) the required petition fee; and (3) a proper statement of unintentional delay.

This application is being referred to Technology Center AU 1611 for processing of the RCE and for appropriate action by the Examiner in the normal course of business on the amendment submitted in accordance with 37 CFR 1.114.

Telephone inquiries concerning this decision should be directed to the undersigned at (571) 272-3205.

/ALESIA M. BROWN/

Alesia M. Brown
Attorney Advisor
Office of Petitions

UNITED STATES PATENT AND TRADEMARK OFFICE

Commissioner for Patents
United States Patent and Trademark Office
P.O. Box 1450
Alexandria, VA 22313-1450
www.uspto.gov

MAILED

JAN 20 2012

OFFICE OF PETITIONS

BLAKELY SOKOLOFF TAYLOR & ZAFMAN LLP
1279 OAKMEAD PARKWAY
SUNNYVALE CA 94085-4040

In re Application of
KIMURA
Application No.: 12/475,254
Filed: May 29, 2009
Attorney Docket No.: 8616P717
For: IMAGE PROCESSOR AND IMAGE PROCESSING METHOD

: DECISION ON REQUEST TO
: PARTICIPATE IN THE PATENT
: PROSECUTION HIGHWAY
: PROGRAM AND PETITION
: TO MAKE SPECIAL UNDER
: 37 CFR 1.102(a)

This is a decision on the request to participate in the Patent Prosecution Highway (PPH) program and the petition under 37 CFR 1.102(a), filed December 8, 2011, to make the above-identified application special.

The request and petition are **DENIED**.

A grantable request to participate in the PPH program and petition to make special require:

1. The U.S. application must validly claim priority under 35 U.S.C. 119(a) to one or more applications filed in the JPO, note where the JPO application with similar claims is not the same application from which the U.S. application claims priority then the applicant must identify the relationship between the JPO application with similar claims and the JPO priority application;

2. Applicant must submit a copy of:
   a. The allowable/patentable claim(s) from the JPO application(s) or if a copy of the allowable/patentable claims is available via the Dossier Access System (DAS) applicant may request the USPTO obtain a copy from the DAS, however if the USPTO is unable to obtain a copy from the DAS the applicant will be required to submit a copy;
   b. An English translation of the allowable/patentable claim(s) and
   c. A statement that the English translation is accurate;

3. Applicant must
   a. Ensure all the claims in the U.S. application must sufficiently correspond or be amended to sufficiently correspond to the allowable/patentable claim(s) in the JPO application(s) and
   b. Submit a claims correspondence table in English;

4. Examination of the U.S. application has not begun;

5. Applicant must submit:
    a. Documentation of prior office action:
        i. a copy of the office action(s) just prior to the "Decision to Grant a Patent" from each of the JPO application(s) containing the allowable/patentable claim(s) or
        ii. if the allowable/patentable claims(s) are from a "Notification of Reasons for Refusal" then the Notification of Reasons for Refusal or
        iii. if the JPO application is a first action allowance then no office action from the JPO is necessary should be indicated on the request/petition form;

    Further, if a copy of the documents from a or b above is available via the Dossier Access System (DAS) applicant may request the USPTO obtain a copy from the DAS, however if the USPTO is unable to obtain a copy from the DAS the applicant will be required to submit a copy;
    b. An English language translation of the JPO Office action from (5)(a)(i)-(ii) above
    c. A statement that the English translation is accurate;

6. Applicant must submit:
    a. An IDS listing the documents cited by the JPO examiner in the JPO office action (unless already submitted in this application)
    b. Copies of the documents except U.S. patents or U.S. patent application publications (unless already submitted in this application);

The request to participate in the PPH pilot program and petition fails to meet condition (4) above.

Regarding the requirement of condition (4), an Office action was mailed on December 7, 2011. Since examination of the U.S. application has begun, the request filed December 8, 2011, to make the above-identified application special cannot be granted.

Telephone inquiries concerning this decision should be directed to Diane Goodwyn (571) 272-6735.

All other inquiries concerning the examination or status of the application is accessible in the PAIR system at http://www.uspto.gov/ebc/index.html.

Anthony Knight
Director
Office of Petitions

UNITED STATES PATENT AND TRADEMARK OFFICE

Commissioner for Patents
United States Patent and Trademark Office
P.O. Box 1450
Alexandria, VA 22313-1450
www.uspto.gov

BIRCH STEWART KOLASCH & BIRCH
PO BOX 747
FALLS CHURCH, VA 22040-0747

MAILED
NOV 07 2011
OFFICE OF PETITIONS

In re Application of	:	
Yamaguchi et al.	:	
Application No. 12/475,273	:	Decision According Status Under
Filed: May 29, 2009	:	37 CFR 1.47(a) and Withdrawing Notice
Attorney Docket No. 5529-0131PUS1	:	
For: Dielectric Ceramic and Capacitor	:	

This is a decision on the petition under 37 CFR 1.47(a) filed October 26, 2009.

The petition is **granted**.

The above-identified application and papers have been reviewed and found in compliance with 37 CFR 1.47(a). This application is hereby accorded Rule 47(a) status.

As provided in Rule 47(c), this Office will forward notice of this application's filing to the non-signing inventor at the address given in the petition. Notice of the filing of this application will also be published in the Official Gazette.

The Office mailed a Notice to File Corrected Application Papers on October 28, 2011. The notice states the application will become abandoned unless a declaration signed by inventor Ryota Kuki is filed within "1 month(s) from the mail date of this Notice, or the time remaining from the Notice of Allowance and Fee(s) Due, whichever is longer." The October 28, 2011 notice is hereby withdrawn.

The Office of Data Management will be informed of the instant decision and the application will be issued as a patent in due course.

Telephone inquiries regarding this communication should be directed to Petitions Attorney Steven Brantley at (571) 272-3203.

Charles Steven Brantley
Senior Petitions Attorney
Office of Petitions

UNITED STATES PATENT AND TRADEMARK OFFICE

Commissioner for Patents
United States Patent and Trademark Office
P.O. Box 1450
Alexandria, VA 22313-1450
www.uspto.gov

BLAKELY SOKOLOFF TAYLOR & ZAFMAN LLP
1279 OAKMEAD PARKWAY
SUNNYVALE CA 94085-4040

MAILED

NOV 22 2010

OFFICE OF PETITIONS

In re Application of	:	
Alexander O. Goushcha et al.	:	
Application No. 12/475,274	:	DECISION ON PETITION
Filed: May 29, 2009	:	TO WITHDRAW
Attorney Docket No. **2712P020**	:	FROM RECORD
	:	

This is a decision on the Request to Withdraw as attorney or agent of record under 37 CFR § 1.36(b), filed November 5, 2010.

The request is **NOT APPROVED**.

The request still cannot be approved at this present time because the requested change in the correspondence address is improper.

As stated in the previous decision the Office will only accept correspondence address changes to the most current address information provided for the assignee of the entire interest *who properly became of record under 37 CFR 3.71,* or, if no assignee of the entire interest has properly been made of record, the most current address information provided for the first named inventor. 37 CFR 3.71(c) states:

> *An assignee becomes of record either in a national patent application or a reexamination proceeding by filing a statement in compliance with § 3.73(b) that is signed by a party who is authorized to act on behalf of the assignee.*

The assignee must establish its ownership of the patent to the satisfaction of the Director. In this regard, the statement under 37 CFR 3.73(b) must have either: (i) documentary evidence of a chain of title from the original owner to the assignee (*e.g.*, copy of an executed assignment), and a statement affirming that the documentary evidence of the chain of title from the original owner to the assignee was or concurrently is being submitted for recordation pursuant to § 3.11; or (ii) a statement specifying where documentary evidence of a chain of title from the original owner to the assignee is recorded in the assignment records of the Office (*e.g.*, reel and frame number).

Therefore, as there is still currently no Statement under 37 CFR 3.73(b) with the current assignee information of record in the instant application, the Office cannot change the correspondence address to the address on the Request to Withdraw at this present time.

All future communications from the Office will continue to be directed to the above-listed address until otherwise notified by applicant.

Telephone inquires concerning this decision should be directed to JoAnne Burke at 571-272-4584.

/JoAnne Burke/
JoAnne Burke
Petitions Examiner
Office of Petitions

UNITED STATES PATENT AND TRADEMARK OFFICE

UNITED STATES DEPARTMENT OF COMMERCE
United States Patent and Trademark Office
Address: COMMISSIONER FOR PATENTS
P.O. Box 1450
Alexandria, Virginia 22313-1450
www.uspto.gov

APPLICATION NO.	FILING DATE	FIRST NAMED INVENTOR	ATTORNEY DOCKET NO.	CONFIRMATION NO.
12/475,324	05/29/2009	Daigo SUZUKI	SUTOSH.417AUS	3278

7590 08/19/2010
KNOBBE MARTENS OLSON & BEAR LLP
2040 MAIN STREET
FOURTEENTH FLOOR
IRVINE, CA 92614

EXAMINER
NORRIS, JEREMY C

ART UNIT	PAPER NUMBER
2841	

NOTIFICATION DATE	DELIVERY MODE
08/19/2010	ELECTRONIC

DECISION GRANTING PETITION UNDER 37 CFR 1.138(d)

The declaration of express abandonment is recognized

This is in response to the petition under 37 CFR 1.138(d), requesting for a refund of any previously paid search fee and excess claims fee in the above-identified application.

The petition is granted.

The express abandonment is recognized. Any previously paid search fee and excess claims fee are hereby refunded.

Telephone inquiries should be directed to the Office of Data Management at (571) 272-4200.

Patent Publication Branch
Office of Data Management

FORM PET651G (Rev. 08/07)

UNITED STATES PATENT AND TRADEMARK OFFICE

Commissioner for Patents
United States Patent and Trademark Office
P.O. Box 1450
Alexandria, VA 22313-1450
www.uspto.gov

CHRISTENSEN, O'CONNOR, JOHNSON, KINDNESS, PLLC
1420 FIFTH AVENUE
SUITE 2800
SEATTLE WA 98101-2347

MAILED

FEB 14 2012

OFFICE OF PETITIONS

In re Application of	:	
Lindbergh et al.	:	
Application No. 12/475,334	:	DECISION ON PETITION
Filed: May 29, 2009	:	PURSUANT TO
Attorney Docket No.: TRCO133164	:	37 C.F.R. § 1.28(c)
Title: APPARATUS AND METHOD FOR	:	
MONITORING TUNNEL BORING	:	
EFFICIENCY	:	

This is a notice regarding your request for acceptance of a fee deficiency submission pursuant to 37 C.F.R. § 1.28, received on January 30, 2012. On September 1, 1998, the Court of Appeals for the Federal Circuit held that 37 C.F.R. § 1.28(c) is the sole provision governing the time for correction of the erroneous payment of the issue fee as a small entity. See DH Technology v. Synergystex International, Inc. 154 F.3d 1333, 47 USPQ2d 1865 (Fed. Cir. Sept. 1, 1998).

The Office no longer investigates or rejects original or reissue applications under 37 C.F.R. § 1.56. 1098 *Off. Gaz. Pat. Office* 502 (January 3, 1989). Therefore, nothing in this notice is intended to imply that an investigation was done.

Petitioner has identified the particular type of fees that were erroneously paid as a small entity, when the small entity fees were actually paid, the small entity fees that were actually paid, the deficiency owed amounts, and the total deficiency payment owed.

Your fee deficiency submission pursuant to 37 C.F.R. § 1.28(c) is hereby accepted. The petition is **GRANTED** accordingly.

The deficiency payment in the amount of $1791.00 has been received.

Your fee deficiency submission pursuant to 37 C.F.R. § 1.28(c) is hereby accepted. The petition is **GRANTED** accordingly.

This application is no longer entitled to small entity status. Accordingly, all future fees paid in this application must be paid at the large entity rate.

The Technology Center will be notified of this decision, and jurisdiction over this application is transferred to the Technology Center, so that the application may receive further processing. The Technology Center's support staff will notify the Examiner of this decision, so that the present application can receive further processing in due course.

Telephone inquiries regarding *this decision* should be directed to the undersigned at (571) 272-3225.[1] All other inquiries concerning examination procedures or status of the application should be directed to the Technology Center.

Paul Shanoski
Senior Attorney
Office of Petitions

1 Petitioner will note that all practice before the Office should be in writing, and the action of the Office will be based exclusively on the written record in the Office. See 37 C.F.R. § 1.2. As such, Petitioner is reminded that no telephone discussion may be controlling or considered authority for Petitioner's further action(s).

UNITED STATES PATENT AND TRADEMARK OFFICE

Commissioner for Patents
United States Patent and Trademark Office
P.O. Box 1450
Alexandria, VA 22313-1450
www.uspto.gov

MAILED

APR 17 2012

PCT LEGAL ADMINISTRATION

WILSON, SONSINI, GOODRICH & ROSATI
650 PAGE MILL ROAD
PALO ALTO, CA 94304-1050

In re Application of	:	
PRELL et al	:	
Application No.: 12/475,338	:	DECISION ON PETITION
Filing Date: May 29, 2009	:	UNDER 37 CFR 1.78(a)
Attorney Docket No.: 29511-726.302	:	

This is a decision on the petition under 37 CFR 1.78(a)(3) and (a)(6), filed February 14, 2012, to accept an unintentionally delayed claim under 35 U.S.C. 119(e), 120 and 365(c) for the benefit of priority to the prior-filed nonprovisional and provisional applications set forth in the amendment filed concurrently with the petition.

Under 37 CFR 1.78(a)(3) and (a)(6), a petition to accept an unintentionally delayed claim under 35 U.S.C. 119(e), 120, 121, or 365(c) for the benefit of a prior-filed application must be accompanied by:

(i) the reference required by 35 U.S.C. 119(e) and 120 and 37 CFR 1.78(a)(2) and (a)(5) to the prior-filed application, unless previously submitted;

(ii) the surcharge set forth in 37 CFR 1.17(t); and

(iii) a statement that the entire delay between the date the claim was due under 37 CFR 1.78 (a)(2)(ii) and (a)(5)(ii) and the date the claim was filed was unintentional. The Director may require additional information where there is a question whether the delay was unintentional.

With regard to item (i), a reference to the prior-filed applications has been included in an amendment to the first sentence of the specification following the title as provided by 37 CFR 1.78(a)(2)(iii) and (a)(5)(iii).

With regard to item (ii), the surcharge set forth in 37 CFR 1.17(t) has been submitted.

With regard to item (iii), the petition contains a proper statement of unintentional delay.

For the reasons above, the petition under 37 CFR 1.78(a)(3) is **GRANTED**.

Applicant is advised that the granting of a petition under 37 CFR 1.78(a)(3) and (a)(6) or the inclusion of a prior-filed application on any Filing Receipt should not be construed as meaning that the application is necessarily entitled to the benefit of the prior-filed applications. In order for an application to be entitled to the benefit of the prior-filed applications, all other requirements under 35 U.S.C. 119(e), 120 and 37 CFR 1.78 must be met. The examiner will, in due course, determine whether this application is entitled to the benefit of an earlier filing date.

This matter is being referred to Technology Center Art Unit 2624 for appropriate action, including consideration by the examiner of applicant's entitlement to the benefit of priority under 35 U.S.C. 120 and 365(c) to the prior-filed nonprovisional application.

BLin

Bryan Lin
PCT Legal Examiner
Office of PCT Legal Administration
571-272-3303

ATTACHMENT: Corrected Filing Receipt

UNITED STATES PATENT AND TRADEMARK OFFICE

Commissioner for Patents
United States Patent and Trademark Office
P.O. Box 1450
Alexandria, VA 22313-1450
www.uspto.gov

FISH & RICHARDSON P.C. (DA)
P.O. BOX 1022
MINNEAPOLIS, MN 55440-1022

MAILED
SEP 23 2011
OFFICE OF PETITIONS

Applicant: Coleman, et al.
Appl. No.: 12/475,372
Filing Date: May 29, 2009
Title: Collectable Card-Based Game In A Massively Multiplayer Role-Playing Game That Processes Card-Based Events
Attorney Docket: 22095-0006001
Pub. No.: US 2010/0304806 A1
Pub. Date: December 2, 2010

This is a decision on the request for a corrected patent application publication under 37 CFR 1.221(b), received on January 13, 2011, for the above-identified application.

The request is DISMISSED.

Applicant requests that the application be republished because the patent application publication contains a material error wherein the "TECHNICAL FIELD" was not printed.

37 CFR 1.221 (b) is applicable: "only when the Office makes a **material mistake** which is apparent from Office records.... Any request for a corrected publication or revised patent application publication other than provided as provided in paragraph (a) of this section must be filed within two months from the date of the patent application publication. This period is not extendable" A material mistake must affect the public's ability to appreciate the technical disclosure of the patent application publication, to determine the scope of the patent application publication, or to determine the scope of the provisional rights that an applicant may seek to enforce upon issuance of a patent. [1]

The errors noted by requestor wherein the "TECHNICAL FIELD" was not printed maybe Office error but it is not a material Office error as defined in 37 CFR 1.221(b). The error does not affect the understanding of the application. The errors therefore do not affect the public's ability to appreciate the technical disclosure of the patent application publication, to determine the scope of the patent application publication, or to determine the scope of the provisional rights that an applicant may seek to enforce upon issuance of a patent.

[1] Changes to Implement Eighteen-Month Publication of Patent Applications, 65 FR 57023, 57038 (Sept. 20, 2000), 1239, Off. Gaz. Pat. Office Notices 63, 75 (Oct. 10, 2000) (final rule).

The applicant is advised that a "request for republication of an application previously published" may be filed under 37 CFR 1.221(a). Such a request for republication "must include a copy of the application compliance with the Office's electronic filing system requirements and be accompanied by the publication fee set forth in § 1.18(d) and the processing fee set forth in § 1.17(i)." If the request for republication does not comply with the electronic filing system requirements, the republication will not take place and the publication fee set forth in § 1.18(d) will be refunded. The processing fee will be retained.

A guide for filing a request for a Pre-Grant Publication, such as a request for republication, may be found on the link below:

http://www.uspto.gov/patents/process/file/efs/guidance/index.jsp
OR
http://www.uspto.gov/ebc/portal/efs/pgpub_quickstart.pdf

Any request for republication under 37 CFR 1.221(a), must be submitted via the EFS system, as a "Pre-Grant Publication" and questions or request for reconsideration of the decision, should be addressed as follows:

By mail to: Mail Stop PGPUB
Commissioner for Patents
P.O. Box 1450
Alexandria, Va. 22313-1450

Inquiries relating to this matter may be directed to Mark Polutta at (571) 272-7709.

Mark Polutta
Senior Legal Advisor
Office of Patent Legal Administration
Office of the Deputy Commissioner
for Patent Examination Policy

UNITED STATES PATENT AND TRADEMARK OFFICE

Commissioner for Patents
United States Patent and Trademark Office
P.O. Box 1450
Alexandria, VA 22313-1450
www.uspto.gov

FISH & RICHARDSON P.C. (DA)
P.O. BOX 1022
MINNEAPOLIS, MN 55440-1022

MAILED
NOV 14 2011
OFFICE OF PETITIONS

In re Application of Coleman et al. :
Application No. 12/475,376 :
Filing Date: May 29, 2009 : Decision on Request
Attorney Docket No. 22095-0004001 :
Pub. No.: US 2010/0304814 A1 :
Pub. Date: December 2, 2010 :

This is a decision on the request for a corrected patent application publication under 37 C.F.R. § 1.221(b) filed January 13, 2011.

The request is **dismissed**.

Applicants request the application be republished because of the mistakes in the patent application publication identified in the request.

37 C.F.R. § 1.221(b) states,

> [Relief under 37 C.F.R. § 1.221 is warranted] only when the Office makes a material mistake which is apparent from Office records.... Any request for corrected publication or revised patent application publication other than provided in paragraph (a) of this section must be filed within two months from the date of the patent application publication. This period is not extendable.

A mistake is only a "material" mistake if the mistake affects the public's ability to appreciate the technical disclosure of the patent application publication, determine the scope of the patent application publication, or determine the scope of the provisional rights that an applicant may seek to enforce upon issuance of a patent.[1]

The mistakes identified in the instant request are not material Office mistakes as required under 37 C.F.R. § 1.1221(b). Specifically, the mistakes do not affect the public's ability to appreciate the technical disclosure of the patent application publication, determine the scope of the patent

[1] *See* Changes to Implement Eighteen-Month Publication of Patent Applications; Final Rule, 65 Fed. Reg. 57023, 57038 (Sept. 20, 2000), 1239 Off. Gaz. Pat. Office 63, 75 (Oct. 10, 2000). *See also* Section 1130 of the Manual of Patent Examining Procedure (8th ed., Rev. 8, July 2010).

application publication, or determine the scope of the provisional rights that an applicant may seek to enforce upon issuance of a patent. *See* MPEP § 1130(B). Therefore, relief under 37 C.F.R. § 1.221(b) is unwarranted and the request is dismissed.

Applicants are advised that a "request for republication of an application previously published" may be filed under 37 C.F.R. § 1.221(a). The request must include a copy of the application, which complies with the Office's electronic filing system requirements set forth in 37 C.F.R. § 1.18(d), and the required processing fee set forth in 37 C.F.R. § 1.17(i).

If the request for republication does not comply with the electronic filing system requirements, the republication will not take place and the publication fee set forth in 37 C.F.R. § 1.18(d) will be refunded. However, the processing fee will be retained.

Guidance for filing a request for a Pre-Grant Publication, such as a request for republication, may be found at the links below:

http://www.uspto.gov/patents/process/file/efs/guidance/index.jsp

http://www.uspto.gov/ebc/portal/efs/pgpub_quickstart.pdf

Any request for republication under 37 C.F.R. § 1.221(a), must be submitted via the EFS system as a "Pre-Grant Publication" and questions or any request for reconsideration of the instant decision should be addressed as follows:

By mail to: Mail Stop PGPUB
Commissioner for Patents
P.O. Box 1450
Alexandria, Va. 22313-1450

Telephone inquiries regarding this communication should be directed to Senior Petitions Attorney Steven Brantley at (571) 272-3203.

Christopher Bottorff
Petitions Examiner
Office of Petitions

UNITED STATES PATENT AND TRADEMARK OFFICE

Commissioner for Patents
United States Patent and Trademark Office
P.O. Box 1450
Alexandria, VA 22313-1450
www.uspto.gov

MAILED

NOV 04 2011

OFFICE OF PETITIONS

FISH & RICHARDSON P.C. (DA)
P.O. BOX 1022
MINNEAPOLIS, MN 55440-1022

Applicant: Coleman, et al.
Appl. No.: 12/475,382
Filing Date: May 29, 2009
Title: COLLECTABLE CARD-BASED GAME IN A MASSIVELY MULTIPLAYER ROLE-PLAYING GAME THAT DYNAMICALLY FILTERS PLAYER COMMUNICATIONS
Attorney Docket No.: 22095-0007001
Pub. No.: US 2010/0304856 A1
Pub. Date: December 2, 2010

This is a decision on the request for correction of patent application publication under 37 CFR 1.221(b), received on January 13, 2011, for the above-identified application.

The request is DISMISSED.

Applicant requests that the application be republished because the patent application publication contains material mistakes, wherein paragraph [0020], line 27 should read "fist" instead of first, paragraph [0028], line 4 should read "110" instead of 10, paragraph [0034], line 8 of column 2 should read http://www.coppa.org/ instead of http:www.coppa.org/ with, paragraph [0043], line 17 should read "110" instead of 10.

37 CFR 1.221 (b) is applicable "only when the Office makes a material mistake which is apparent from Office records.... Any request for a corrected publication or revised patent application publication other than provided as provided in paragraph (a) of this section must be filed within two months from the date of the patent application publication. This period is not extendable." A material mistake must affect the public's ability to appreciate the technical disclosure of the patent application publication, to determine the scope of the patent application publication, or to determine the scope of the provisional rights that an applicant may seek to enforce upon issuance of a patent. [1]

The errors noted by requestor are Office errors but are not material Office errors as defined under 37 CFR 1.221(b). In particular, the errors do not affect the interpretation of the published claims. See MPEP 1130 B.

[1] Changes to Implement Eighteen-Month Publication of Patent Applications, 65 FR 57023, 57038 (Sept. 20, 2000), 1239, Off. Gaz. Pat. Office Notices 63, 75 (Oct. 10, 2000) (final rule).

Application No. 12/475,382

The applicant is advised that a "request for republication of an application previously published" may be filed under 37 CFR 1.221(a). Such a request for republication "must include a copy of the application compliance with the Office's electronic filing system requirements and be accompanied by the publication fee set forth in § 1.18(d) and the processing fee set forth in § 1.17(i)." If the request for republication does not comply with the electronic filing system requirements, the republication will not take place and the publication fee set forth in § 1.18(d) will be refunded. The processing fee will be retained.

A guide for filing a request for a Pre-Grant Publication, such as a request for republication, may be found on the link below:

http://www.uspto.gov/patents/process/file/efs/guidance/index.jsp

http://www.uspto.gov/ebc/portal/efs/pgpub_quickstart.pdf

Any request for republication under 37 CFR 1.221(a), must be submitted via the EFS system, as a "Pre-Grant Publication".

Inquiries relating to this matter may be directed to Sherry D. Brinkley at (571) 272-3204.

/Christopher Bottorff/

Christopher Bottorff
Petitions Examiner
Office of Petitions

UNITED STATES PATENT AND TRADEMARK OFFICE

Commissioner for Patents
United States Patent and Trademark Office
P.O. Box 1450
Alexandria, VA 22313-1450
www.uspto.gov

LUCE, FORWARD, HAMILTON & SCRIPPS, LLP
2050 MAIN STREET
SUITE 600
IRVINE, CA 92614

MAILED

OCT 22 2010

OFFICE OF PETITIONS

In re Application of	:	
David A. Ferrere	:	
Application No. 12/475,389	:	DECISION ON PETITION
Filed: May 29, 2009	:	TO WITHDRAW
Attorney Docket No. MDFR.006A	:	FROM RECORD
	:	

This is a decision on the Request to Withdraw as attorney or agent of record under 37 C.F.R. § 1.36(b), filed September 10, 2010.

The request is **DISMISSED** as moot.

A review of the file record indicates that the power of attorney to Luce, Forward, Hamilton & Scripps, LLP has been revoked by the assignee of the patent application on September 20, 2010. Accordingly, the request to withdraw under 37 C.F.R. § 1.36(b) is moot.

All future communications from the Office will continue to be directed to the below-listed address until otherwise notified by applicant.

Telephone inquires concerning this decision should be directed to undersigned at 571-272-1642.

/AMW/
April M. Wise
Petitions Examiner
Office of Petitions

Doc Code: PET.AUTO Document Description: Petition automatically granted by EFS-Web	PTO/SB/64 U.S. Patent and Trademark Office Department of Commerce

Electronic Petition Request	**PETITION FOR REVIVAL OF AN APPLICATION FOR PATENT ABANDONED UNINTENTIONALLY UNDER 37 CFR 1.137(b)**
Application Number	12475393
Filing Date	29-May-2009
First Named Inventor	Richard Hessel
Attorney Docket Number	HESSE-01002
Title	Vector Processor System

The above-identified application became abandoned for failure to file a timely and proper reply to a notice or action by the United States Patent and Trademark Office. The date of abandonment is the day after the expiration date of the period set for reply in the office notice or action plus any extensions of time actually obtained.

APPLICANT HEREBY PETITIONS FOR REVIVAL OF THIS APPLICATION

NOTE: A grantable petition requires the following items:
(1) Petition fee;
(2) Reply and/or issue fee;
(3) Terminal disclaimer with disclaimer fee - required for all utility and plant applications filed before June 8, 1995; and for all design applications; and
(4) Statement that the entire delay was unintentional

Petition Fee

- ○ Applicant claims SMALL ENTITY status. See 37 CFR 1.27.
- ○ Applicant is no longer claiming SMALL ENTITY status. See 37 CFR 1.27(g)(2).
- ◉ Applicant(s) status remains as SMALL ENTITY.
- ○ Applicant(s) status remains as other than SMALL ENTITY.

2. Reply and/or fee

- ○ I certify, in accordance with 37 CFR 1.4(d)(4) that the amendment and response have already been filed in the above-identified application on
- ○ Amendment and response are attached

RCE request,submission, and fee.

- ○ I certify, in accordance with 37 CFR 1.4(d)(4) that the RCE Request, Submission, and Fee have already been filed in the above-identified application on
- ◉ RCE Request, Submission, and Fee are attached

Notice of Appeal

○ I certify, in accordance with 37 CFR 1.4(d)(4) that the Notice of Appeal and Fee have already been filed in the above-identified application on

○ Notice of Appeal and Fee are attached

3. Terminal Disclaimer is not required, since the Electronic Petition format is not support for Design applications and applications filed before June 8, 1995. Please file using regular petition format for review by the Office of Petitions.

☒ STATEMENT: The entire delay in filing the required reply from the due date for the required reply until the filing of a grantable petition under 37 CFR 1.137(b) was unintentional.

THIS PORTION MUST BE COMPLETED BY THE SIGNATORY OR SIGNATORIES

I certify, in accordance with 37 CFR 1.4(d)(4) that I am:

○ An attorney or agent registered to practice before the Patent and Trademark Office who has been given power of attorney in this application.

◉ An attorney or agent registered to practice before the Patent and Trademark Office, acting in a representative capacity.

○ A sole inventor

○ A joint inventor; I certify that I am authorized to sign this submission on behalf of all of the inventors

○ A joint inventor; all of whom are signing this e-petition

○ The assignee of record of the entire interest that has properly made itself of record pursuant to 37 CFR 3.71

Signature	/Stuart J. West/
Name	Stuart J. West
Registration Number	43258

UNITED STATES PATENT AND TRADEMARK OFFICE

Commissioner for Patents
United States Patent and Trademark Office
P.O. Box 1450
Alexandria, VA 22313-1450
www.uspto.gov

Decision Date March 22, 2012

In re Application of Richard Hessel

Application No. 12475393

Filed: 29-May-2009

Attorney Docket No. HESSE-01002

DECISION ON PETITION

UNDER CFR 1.137(b)

This is an electronic decision on the petition under 37 CFR 1.137(b), March 22, 2012 , to revive the above-identified application.

The petition is GRANTED.

The above-identified application became abandoned for failure to reply in a timely manner to the outstanding final Office action. The date of abandonment is the day after the last day of the period set for reply in the Office action plus any applicable extensions of time properly requested.

The electronic petition satisfies the conditions for revival pursuant to the provisions of 37 CFR 1.137(b) in that (1) the reply in the form of an amendment and/or response, Request for Continued Examination, and the filing fee required under 37 CFR 1.17(e); (2) the petition fee as set forth in 37 CFR 1.17 (m); and (3) the required statement of unintentional delay have been received. Accordingly, the Request for Continued Examination and the amendment and/or response are accepted as having been unintentionally delayed.

The statement of unintentional delay is being treated as having been made as the result of a reasonable inquiry into the facts and circumstances of such delay and by a person having firsthand or direct knowledge of the facts and circumstances of the delay at issue. See 37 CFR 10.18(b) and Changes to Patent Practice and Procedure; Final Rule Notice, 62 Fed. Reg. 53131, 53178 (October 10, 1997), 1203 Off. Gaz. Pat. Office 63, 103 (October 21, 1997). In the event that such an inquiry has not been made, petitioner must make such an inquiry. If such inquiry results in the discovery that it is not correct that the entire delay in filing the required reply from the due date for the reply until the filing of a grantable petition pursuant to 37 CFR 1.137(b) was unintentional, petitioner must notify the Office.

Telephone inquiries concerning this decision should be directed to the Patent Electronic Business Center (EBC) at 866-217-9197.

This application file is being directed to the Technology Center.

Office of Petitions

UNITED STATES PATENT AND TRADEMARK OFFICE

Commissioner for Patents
United States Patent and Trademark Office
P.O. Box 1450
Alexandria, VA 22313-1450
www.uspto.gov

JASON SCOTT LUCK
165-A KING STREET
CHARLESTON, SC 29401

MAILED

JAN 19 2011

OFFICE OF PETITIONS

In re Application of	:	
BITTNER, Norman D.	:	
Application No. 12/475,394	:	DECISION ON PETITION
Filed: May 29, 2009	:	TO WITHDRAW
Attorney Docket No. **AMK-5661-2**	:	FROM RECORD
	:	

This is a decision on the Request to Withdraw as attorney or agent of record under 37 C.F.R. § 1.36(b), filed December 16, 2010.

The request is **NOT APPROVED** as moot.

A review of the file record indicates that the power of attorney to Jason Scott Luck has been revoked by the applicant of the patent application on December 20, 2010. Accordingly, the request to withdraw under 37 C.F.R. § 1.36(b) is moot.

All future communications from the Office will continue to be directed to the below-listed address until otherwise notified by applicant.

Telephone inquires concerning this decision should be directed to the undersigned at 571-272-4231.

Michelle R. Eason
Paralegal Specialist
Office of Petitions

cc: **NIXON & VANDERHYE, PC**
901 NORTH GLEBE ROAD, 11TH FLOOR
ARLINGTON VA 22203

Doc Code: PET.GREEN
Document Description: Petition for Green Tech Pilot

PTO/SB/420 (05-10)
Approved for use through 01/31/2011. OMB 0651-0062
U.S. Patent and Trademark Office; U. S. DEPARTMENT OF COMMERCE
Under the Paperwork Reduction Act of 1995, no persons are required to respond to a collection of information unless it displays a valid OMB control number.

PETITION TO MAKE SPECIAL UNDER THE GREEN TECHNOLOGY PILOT PROGRAM

Attorney Docket Number: ALTA-0003US1 (4975P-1)	Application Number (if known): 12/475,406	Filing date: May 29, 2009

First Named Inventor: Melissa Archer et al.

Title: EPITAXIAL LIFT OFF STACK HAVING A PRE-CURVED HANDLE AND METHODS THEREOF

APPLICANT HEREBY REQUESTS TO PARTICIPATE IN THE GREEN TECHNOLOGY PILOT PROGRAM FOR THE ABOVE-IDENTIFIED APPLICATION. See Instruction Sheet on page 2.

This petition must be timely filed electronically using the USPTO electronic filing system, EFS-Web.

1. By filing this petition:

   Applicant is requesting early publication: Applicant hereby requests early publication under 37 CFR 1.219 and the publication fee set forth in 37 CFR 1.18(d) accompanies this request.

2. By filing this petition: applicant is agreeing to make an election without traverse in a telephonic interview and elect an invention that meets the eligibility requirements set forth in the notice titled "Pilot Program for Green Technologies Including Greenhouse Gas Reduction," as modified by the notice titled "Elimination of Classification Requirement in the Green Technology Pilot Program," each of which was published in the Federal Register, if the Office determines that the claims are not obviously directed to a single invention.

3. This request is accompanied by statements of special status for the eligibility requirement.

4. The application contains no more than three (3) independent claims and twenty (20) total claims.

5. The application does not contain any multiple dependent claims.

6. Other attachments: _____

Signature /James P. Hao/	Date 1/18/2011
Name (Print/Typed) James P. Hao	Registration Number 36398

***Note**: Signatures of all the inventors or assignees of record of the entire interest or their representative(s) are required in accordance with 37 CFR 1.33 and 11.18. Please see 37 CFR 1.4(d) for the form of the signature. If necessary, submit multiple forms for more than one signature, see below*.*

☐ *Total of _____ forms are submitted.

The information is required to obtain or retain a benefit by the public which is to file (and by the USPTO to process) an application. Confidentiality is governed by 35 U.S.C. 122 and 37 CFR 1.11 and 1.14. This collection is estimated to take 1 hour to complete, including gathering, preparing, and submitting the completed application form to the USPTO. Time will vary depending upon the individual case. Any comments on the amount of time you require to complete this form and/or suggestions for reducing this burden, should be sent to the Chief Information Officer, U.S. Patent and Trademark Office, U.S. Department of Commerce, P.O. Box 1450, Alexandria, VA 22313-1450. DO NOT SEND FEES OR COMPLETED FORMS TO THIS ADDRESS. **SEND TO: Commissioner for Patents, P.O. Box 1450, Alexandria, VA 22313-1450.**

If you need assistance in completing the form, call 1-800-PTO-9199 and select option 2.

Under the Paperwork Reduction Act of 1995, no persons are required to respond to a collection of information unless it displays a valid OMB control number.

Instruction Sheet for Petition to Make Special Under the Green Technology Pilot Program

(Not to be Submitted to the USPTO)

The following is a summary of the requirements (for more information see the notices (i) "Pilot Program for Green Technologies Including Greenhouse Gas Reduction" and (ii) "Elimination of Classification Requirement in the Green Technology Pilot Program," available on the USPTO web site at http://www.uspto.gov/patents/init_events/green_tech.jsp):

(1) The application must be a non-reissue, non-provisional utility application filed under 35 U.S.C. 111(a), or an international application that has entered the national stage in compliance with 35 U.S.C. 371. The application must be previously filed before the publication date of the notice cited above. Reexamination proceedings are excluded from this pilot program.

(2) The application must contain three or fewer independent claims and twenty or fewer total claims. The application must not contain any multiple dependent claims. For an application that contains more than three independent claims or twenty total claims, or multiple dependent claims, applicant must file a preliminary amendment in compliance with 37 CFR 1.121 to cancel the excess claims and/or the multiple dependent claims at the time the petition to make special is filed.

(3) The claims must be directed to a single invention that materially enhances the quality of the environment, or that materially contributes to: (1) the discovery or development of renewable energy resources; (2) the more efficient utilization and conservation of energy resources; or (3) green house gas emission reduction (see the eligibility requirements of sections II and III of the notice (i) cited above). The petition must include a statement that, if the USPTO determines that the claims are directed to multiple inventions (e.g., in a restriction requirement), applicant will agree to make an election without traverse in a telephonic interview, and elect an invention that meets the eligibility requirements in section II or III of the notice (i) cited above.

(4) The petition to make special must be timely filed electronically using the USPTO electronic filing system, EFS-Web, and selecting the document description of "Petition for Green Tech Pilot" on the EFS-Web screen. Applicant should use form PTO/SB/420, which is available as a Portable Document Format (PDF) fillable form in EFS-Web and on the USPTO Web site.

(5) The petition to make special must be filed at least one day prior to the date that a first Office action (which may be an Office action containing only a restriction requirement) appears in the Patent Application Information Retrieval (PAIR) system. Applicant may check the status of the application using PAIR.

(6) The petition to make special must be accompanied by a request for early publication in compliance with 37 CFR 1.219 and the publication fee set forth in 37 CFR 1.18(d).

Privacy Act Statement

The **Privacy Act of 1974 (P.L. 93-579)** requires that you be given certain information in connection with your submission of the attached form related to a patent application or patent. Accordingly, pursuant to the requirements of the Act, please be advised that: (1) the general authority for the collection of this information is 35 U.S.C. 2(b)(2); (2) furnishing of the information solicited is voluntary; and (3) the principal purpose for which the information is used by the U.S. Patent and Trademark Office is to process and/or examine your submission related to a patent application or patent. If you do not furnish the requested information, the U.S. Patent and Trademark Office may not be able to process and/or examine your submission, which may result in termination of proceedings or abandonment of the application or expiration of the patent.

The information provided by you in this form will be subject to the following routine uses:

1. The information on this form will be treated confidentially to the extent allowed under the Freedom of Information Act (5 U.S.C. 552) and the Privacy Act (5 U.S.C 552a). Records from this system of records may be disclosed to the Department of Justice to determine whether disclosure of these records is required by the Freedom of Information Act.
2. A record from this system of records may be disclosed, as a routine use, in the course of presenting evidence to a court, magistrate, or administrative tribunal, including disclosures to opposing counsel in the course of settlement negotiations.
3. A record in this system of records may be disclosed, as a routine use, to a Member of Congress submitting a request involving an individual, to whom the record pertains, when the individual has requested assistance from the Member with respect to the subject matter of the record.
4. A record in this system of records may be disclosed, as a routine use, to a contractor of the Agency having need for the information in order to perform a contract. Recipients of information shall be required to comply with the requirements of the Privacy Act of 1974, as amended, pursuant to 5 U.S.C. 552a(m).
5. A record related to an International Application filed under the Patent Cooperation Treaty in this system of records may be disclosed, as a routine use, to the International Bureau of the World Intellectual Property Organization, pursuant to the Patent Cooperation Treaty.
6. A record in this system of records may be disclosed, as a routine use, to another federal agency for purposes of National Security review (35 U.S.C. 181) and for review pursuant to the Atomic Energy Act (42 U.S.C. 218(c)).
7. A record from this system of records may be disclosed, as a routine use, to the Administrator, General Services, or his/her designee, during an inspection of records conducted by GSA as part of that agency's responsibility to recommend improvements in records management practices and programs, under authority of 44 U.S.C. 2904 and 2906. Such disclosure shall be made in accordance with the GSA regulations governing inspection of records for this purpose, and any other relevant (*i.e.*, GSA or Commerce) directive. Such disclosure shall not be used to make determinations about individuals.
8. A record from this system of records may be disclosed, as a routine use, to the public after either publication of the application pursuant to 35 U.S.C. 122(b) or issuance of a patent pursuant to 35 U.S.C. 151. Further, a record may be disclosed, subject to the limitations of 37 CFR 1.14, as a routine use, to the public if the record was filed in an application which became abandoned or in which the proceedings were terminated and which application is referenced by either a published application, an application open to public inspection or an issued patent.
9. A record from this system of records may be disclosed, as a routine use, to a Federal, State, or local law enforcement agency, if the USPTO becomes aware of a violation or potential violation of law or regulation.

UNITED STATES PATENT AND TRADEMARK OFFICE

UNITED STATES DEPARTMENT OF COMMERCE
United States Patent and Trademark Office
Address: COMMISSIONER FOR PATENTS
P.O. Box 1450
Alexandria, Virginia 22313-1450
www.uspto.gov

APPLICATION NO.	FILING DATE	FIRST NAMED INVENTOR	ATTORNEY DOCKET NO.	CONFIRMATION NO.
12/475,406	05/29/2009	Melissa Archer	ALTA/0003US 1884.040362	3436

99144 7590 02/01/2011
Alta Devices, Inc.
c/o Sawyer Law Group, P.C.
P.O. Box 51418
Palo Alto, CA 94303

EXAMINER
AHMAD, KHAJA

ART UNIT	PAPER NUMBER
4145	

NOTIFICATION DATE	DELIVERY MODE
02/01/2011	ELECTRONIC

Please find below and/or attached an Office communication concerning this application or proceeding.

The time period for reply, if any, is set in the attached communication.

Notice of the Office communication was sent electronically on above-indicated "Notification Date" to the following e-mail address(es):

patent@sawyerlawgroup.com

UNITED STATES PATENT AND TRADEMARK OFFICE

Commissioner for Patents
United States Patent and Trademark Office
P.O. Box 1450
Alexandria, VA 22313-1450
www.uspto.gov

02/01/2011

Alta Devices, Inc.
c/o Sawyer Law Group, P.C.
P.O. Box 51418
Palo Alto CA 94303

In re Application of	:	
Archer et al.	:	DECISION ON PETITION
Application No. 12/475,406	:	TO MAKE SPECIAL UNDER
Filed: 5/29/2009	:	THE GREEN TECHNOLOGY
Attorney Docket No. **ALTA/0003US 1884.040362**	:	PILOT PROGRAM

This is a decision on the petition under 37 CFR 1.102, filed 1/18/2011, to make the above-identified application special under the pilot program for applications pertaining to Green Technologies as set forth in 74 Federal Register Notice 64666 (December 8, 2009) and amended by 75 Federal Register Notice 28554 (May 21, 2010) and 75 Federal Register Notice 69049 (November 10, 2010).

The petition is **GRANTED**.

A grantable petition to make an application special under 37 CFR 1.102 and the pilot program as set forth in 74 FR 64666 must be directed to a nonprovisional application filed under 35 USC 111(a) or be a national stage entry under 35 USC 371, exclusive of any reissue applications.

In order to qualify for special status, the following requirements must be met. 1) The application must have no more than 3 independent claims and no more than 20 total claims. 2) The application must not contain any multiple dependent claims. 3) The petition must state the basis for seeking special status, i.e., the claimed invention either: A) materially enhances the quality of the environment or B) materially contributes to: i) the discovery or development of renewable energy resources, ii) the more efficient utilization and conservation of energy resources, or iii) greenhouse gas emission reduction. 4) If the disclosure is not clear on its face that the claimed invention materially contributes under category (A) or (B), the petition must be accompanied by a statement by the applicant, assignee, or an attorney/agent registered to practice before the Office explaining how the materiality standard is met. 5) A statement that applicant will agree to make an election without traverse in a telephonic interview if a restriction requirement is made by the examiner. 6) The petition to make special must be filed electronically. 7) The petition must be filed at least one day prior to the date that a first Office Action appears in the Patent Application Information Retrieval (PAIR) system. 8) The petition must be accompanied by a

request for early publication in compliance with 37 CFR 1.219 and include the publication fee as set forth in 37 CFR 1.18(d).

The requirement for a fee for consideration of the petition to make special for applications pertaining to Green Technologies has been waived.

The instant petition complies with items 1 – 8 above. Accordingly, the above-identified application has been accorded "special" status.

Telephone inquires concerning this decision should be directed to Tom Dunn at 571-272-1171.

The application is being forwarded to the Technology Center Art Unit 4145 for action on the merits commensurate with this decision.

/Tom Dunn/

Tom Dunn
Quality Assurance Specialist
Technology Center 1700

Doc Code: PET.GREEN
Document Description: Petition for Green Tech Pilot

PTO/SB/420 (05-10)
Approved for use through 01/31/2011. OMB 0651-0062
U.S. Patent and Trademark Office; U. S. DEPARTMENT OF COMMERCE
Under the Paperwork Reduction Act of 1995, no persons are required to respond to a collection of information unless it displays a valid OMB control number.

PETITION TO MAKE SPECIAL UNDER THE GREEN TECHNOLOGY PILOT PROGRAM

Attorney Docket Number: ALTA-0003US2 (4975P-2)	Application Number (if known): 12/475,411	Filing date: May 29, 2009

First Named Inventor: Melissa Archer et al.

Title: EPITAXIAL LIFT OFF STACK HAVING A UNIVERSALLY SHRUNK HANDLE AND METHODS THEREOF

APPLICANT HEREBY REQUESTS TO PARTICIPATE IN THE GREEN TECHNOLOGY PILOT PROGRAM FOR THE ABOVE-IDENTIFIED APPLICATION. See Instruction Sheet on page 2.

This petition must be timely filed electronically using the USPTO electronic filing system, EFS-Web.

1. By filing this petition:

   Applicant is requesting early publication: Applicant hereby requests early publication under 37 CFR 1.219 and the publication fee set forth in 37 CFR 1.18(d) accompanies this request.

2. By filing this petition: applicant is agreeing to make an election without traverse in a telephonic interview and elect an invention that meets the eligibility requirements set forth in the notice titled "Pilot Program for Green Technologies Including Greenhouse Gas Reduction," as modified by the notice titled "Elimination of Classification Requirement in the Green Technology Pilot Program," each of which was published in the Federal Register, if the Office determines that the claims are not obviously directed to a single invention.

3. This request is accompanied by statements of special status for the eligibility requirement.

4. The application contains no more than three (3) independent claims and twenty (20) total claims.

5. The application does not contain any multiple dependent claims.

6. Other attachments: _____

Signature /James P. Hao/	Date 1/18/2011
Name (Print/Typed) James P. Hao	Registration Number 36398

***Note**: Signatures of all the inventors or assignees of record of the entire interest or their representative(s) are required in accordance with 37 CFR 1.33 and 11.18. Please see 37 CFR 1.4(d) for the form of the signature. If necessary, submit multiple forms for more than one signature, see below*.*

☐ *Total of _____ forms are submitted.

The information is required to obtain or retain a benefit by the public which is to file (and by the USPTO to process) an application. Confidentiality is governed by 35 U.S.C. 122 and 37 CFR 1.11 and 1.14. This collection is estimated to take 1 hour to complete, including gathering, preparing, and submitting the completed application form to the USPTO. Time will vary depending upon the individual case. Any comments on the amount of time you require to complete this form and/or suggestions for reducing this burden, should be sent to the Chief Information Officer, U.S. Patent and Trademark Office, U.S. Department of Commerce, P.O. Box 1450, Alexandria, VA 22313-1450. DO NOT SEND FEES OR COMPLETED FORMS TO THIS ADDRESS. **SEND TO: Commissioner for Patents, P.O. Box 1450, Alexandria, VA 22313-1450.**

If you need assistance in completing the form, call 1-800-PTO-9199 and select option 2.

Under the Paperwork Reduction Act of 1995, no persons are required to respond to a collection of information unless it displays a valid OMB control number.

Instruction Sheet for Petition to Make Special Under the Green Technology Pilot Program

(Not to be Submitted to the USPTO)

The following is a summary of the requirements (for more information see the notices (i) "Pilot Program for Green Technologies Including Greenhouse Gas Reduction" and (ii) "Elimination of Classification Requirement in the Green Technology Pilot Program," available on the USPTO web site at http://www.uspto.gov/patents/init_events/green_tech.jsp):

(1) The application must be a non-reissue, non-provisional utility application filed under 35 U.S.C. 111(a), or an international application that has entered the national stage in compliance with 35 U.S.C. 371. The application must be previously filed before the publication date of the notice cited above. Reexamination proceedings are excluded from this pilot program.

(2) The application must contain three or fewer independent claims and twenty or fewer total claims. The application must not contain any multiple dependent claims. For an application that contains more than three independent claims or twenty total claims, or multiple dependent claims, applicant must file a preliminary amendment in compliance with 37 CFR 1.121 to cancel the excess claims and/or the multiple dependent claims at the time the petition to make special is filed.

(3) The claims must be directed to a single invention that materially enhances the quality of the environment, or that materially contributes to: (1) the discovery or development of renewable energy resources; (2) the more efficient utilization and conservation of energy resources; or (3) green house gas emission reduction (see the eligibility requirements of sections II and III of the notice (i) cited above). The petition must include a statement that, if the USPTO determines that the claims are directed to multiple inventions (e.g., in a restriction requirement), applicant will agree to make an election without traverse in a telephonic interview, and elect an invention that meets the eligibility requirements in section II or III of the notice (i) cited above.

(4) The petition to make special must be timely filed electronically using the USPTO electronic filing system, EFS-Web, and selecting the document description of "Petition for Green Tech Pilot" on the EFS-Web screen. Applicant should use form PTO/SB/420, which is available as a Portable Document Format (PDF) fillable form in EFS-Web and on the USPTO Web site.

(5) The petition to make special must be filed at least one day prior to the date that a first Office action (which may be an Office action containing only a restriction requirement) appears in the Patent Application Information Retrieval (PAIR) system. Applicant may check the status of the application using PAIR.

(6) The petition to make special must be accompanied by a request for early publication in compliance with 37 CFR 1.219 and the publication fee set forth in 37 CFR 1.18(d).

Privacy Act Statement

The **Privacy Act of 1974 (P.L. 93-579)** requires that you be given certain information in connection with your submission of the attached form related to a patent application or patent. Accordingly, pursuant to the requirements of the Act, please be advised that: (1) the general authority for the collection of this information is 35 U.S.C. 2(b)(2); (2) furnishing of the information solicited is voluntary; and (3) the principal purpose for which the information is used by the U.S. Patent and Trademark Office is to process and/or examine your submission related to a patent application or patent. If you do not furnish the requested information, the U.S. Patent and Trademark Office may not be able to process and/or examine your submission, which may result in termination of proceedings or abandonment of the application or expiration of the patent.

The information provided by you in this form will be subject to the following routine uses:

1. The information on this form will be treated confidentially to the extent allowed under the Freedom of Information Act (5 U.S.C. 552) and the Privacy Act (5 U.S.C 552a). Records from this system of records may be disclosed to the Department of Justice to determine whether disclosure of these records is required by the Freedom of Information Act.
2. A record from this system of records may be disclosed, as a routine use, in the course of presenting evidence to a court, magistrate, or administrative tribunal, including disclosures to opposing counsel in the course of settlement negotiations.
3. A record in this system of records may be disclosed, as a routine use, to a Member of Congress submitting a request involving an individual, to whom the record pertains, when the individual has requested assistance from the Member with respect to the subject matter of the record.
4. A record in this system of records may be disclosed, as a routine use, to a contractor of the Agency having need for the information in order to perform a contract. Recipients of information shall be required to comply with the requirements of the Privacy Act of 1974, as amended, pursuant to 5 U.S.C. 552a(m).
5. A record related to an International Application filed under the Patent Cooperation Treaty in this system of records may be disclosed, as a routine use, to the International Bureau of the World Intellectual Property Organization, pursuant to the Patent Cooperation Treaty.
6. A record in this system of records may be disclosed, as a routine use, to another federal agency for purposes of National Security review (35 U.S.C. 181) and for review pursuant to the Atomic Energy Act (42 U.S.C. 218(c)).
7. A record from this system of records may be disclosed, as a routine use, to the Administrator, General Services, or his/her designee, during an inspection of records conducted by GSA as part of that agency's responsibility to recommend improvements in records management practices and programs, under authority of 44 U.S.C. 2904 and 2906. Such disclosure shall be made in accordance with the GSA regulations governing inspection of records for this purpose, and any other relevant (*i.e.*, GSA or Commerce) directive. Such disclosure shall not be used to make determinations about individuals.
8. A record from this system of records may be disclosed, as a routine use, to the public after either publication of the application pursuant to 35 U.S.C. 122(b) or issuance of a patent pursuant to 35 U.S.C. 151. Further, a record may be disclosed, subject to the limitations of 37 CFR 1.14, as a routine use, to the public if the record was filed in an application which became abandoned or in which the proceedings were terminated and which application is referenced by either a published application, an application open to public inspection or an issued patent.
9. A record from this system of records may be disclosed, as a routine use, to a Federal, State, or local law enforcement agency, if the USPTO becomes aware of a violation or potential violation of law or regulation.

UNITED STATES PATENT AND TRADEMARK OFFICE

UNITED STATES DEPARTMENT OF COMMERCE
United States Patent and Trademark Office
Address: COMMISSIONER FOR PATENTS
P.O. Box 1450
Alexandria, Virginia 22313-1450
www.uspto.gov

APPLICATION NO.	FILING DATE	FIRST NAMED INVENTOR	ATTORNEY DOCKET NO.	CONFIRMATION NO.
12/475,411	05/29/2009	Melissa Archer	ALTA/0003US02 1884.040630	3442

99144 7590 01/26/2011
Alta Devices, Inc.
c/o Sawyer Law Group, P.C.
P.O. Box 51418
Palo Alto, CA 94303

EXAMINER
MATTHEWS, COLLEEN ANN

ART UNIT	PAPER NUMBER
2811	

NOTIFICATION DATE	DELIVERY MODE
01/26/2011	ELECTRONIC

Please find below and/or attached an Office communication concerning this application or proceeding.

The time period for reply, if any, is set in the attached communication.

Notice of the Office communication was sent electronically on above-indicated "Notification Date" to the following e-mail address(es):

patent@sawyerlawgroup.com

UNITED STATES PATENT AND TRADEMARK OFFICE

Commissioner for Patents
United States Patent and Trademark Office
P.O. Box 1450
Alexandria, VA 22313-1450
www.uspto.gov

Alta Devices, Inc.
c/o Sawyer Law Group, P.C.
P.O. Box 51418
Palo Alto CA 94303

In re Application of	:	
ARCHER et al.	:	DECISION ON PETITION
Application No. 12/475,411	:	TO MAKE SPECIAL UNDER
Filed: May 29, 2009	:	THE GREEN TECHNOLOGY
Attorney Docket No. ALTA/0003US02 1884.040630	:	PILOT PROGRAM

This is a decision on the petition under 37 CFR 1.102, filed on January 18, 2011, to make the above-identified application special under the pilot program for applications pertaining to Green Technologies as set forth 74 Federal Register Notice 64666 (December 8, 2009) and amended by 75 Federal Register Notice 28554 (May 21, 2010) and 75 Federal Register Notice 69049 (November 10, 2010).

The petition is **DISMISSED**.

If reconsideration of this decision is desired, a petition for reconsideration must be filed within ONE (1) MONTH OR THIRTY (30) DAYS from the mail date of this decision, whichever is longer. No extension of this time limit can be granted under 37 CFR 1.136(a) or (b). The petition for reconsideration should include an exhaustive attempt to provide the lacking item(s) noted below, since, after a decision on the petition for reconsideration, no further reconsideration or review of the matter will be undertaken by the Director.

A grantable petition to make an application special under 37 CFR 1.102 and the pilot program as set forth in 74 FR 64666 must be directed to a nonprovisional application filed under 35 USC 111(a) or be a national stage entry under 35 USC 371, exclusive of any reissue applications and be filed prior to the date of the notice, December 8, 2009.

In order to qualify for special status, the following requirements must be met. 1) The application must have no more than 3 independent claims and no more than 20 total claims. 2) The application must not contain any multiple dependent claims. 3) The petition must state the basis for seeking special status, i.e., the claimed invention either: A) materially enhances the quality of the environment or B) materially contributes to: i) the discovery or development of renewable energy resources, ii) the more efficient utilization and conservation of energy resources, or iii) greenhouse gas emission reduction. 4) If the disclosure is not clear on its face that the claimed invention materially contributes under category (A) or (B), the petition must be accompanied by a statement by the applicant, assignee, or an attorney/agent registered to practice before the

Office explaining how the materiality standard is met. 5) A statement that applicant will agree to make an election without traverse in a telephonic interview if a restriction requirement is made by the examiner. 6) The petition to make special must be filed electronically. 7) The petition must be filed at least one day prior to the date that a first Office Action appears in the Patent Application Information Retrieval (PAIR) system. 8) The petition must be accompanied by a request for early publication in compliance with 37 CFR 1.219 and include the publication fee as set forth in 37 CFR 1.18(d).

The requirement for a fee for consideration of the petition to make special for applications pertaining to Green Technologies has been waived.

The petition lacks item 4.

In regard to item 4, applicant's statement pertaining to how the materiality standard is met does not satisfy the requirements for this pilot. The instant petition includes a statement identifying the basis for the special status as contributing to the development of renewable energy resources and more efficient utilization and conservation of energy. The materiality standard does not permit an applicant to speculate as to how a hypothetical end-user might specially apply the invention in a manner that could contribute to the development of renewable resources or more efficient utilization and conservation of energy. The claims generally relate to a method of making a thin film. The recitation of the solar device in the claims is considered intended use. Any argument that the claimed invention can be used with solar devices is considered speculate as to how a hypothetical end-user might specially apply the claimed invention. Further, promoting the utilization of solar energy is not more efficient utilization and conservation of energy.

Any reconsideration of this decision should be submitted through the USPTO electronic filing system, EFS-Web, and selecting the document description of "Petition for Green Tech Pilot" on the EFS-Web screen.

Telephone inquiries concerning this decision should be directed to Lee W. Young at 571-272-4549.

The application is being forwarded to the Technology Center Art Unit 2811 for action in its regular turn.

Lee W. Young
Quality Assurance Specialist
Technology Center 2800

IN THE UNITED STATES PATENT AND TRADEMARK OFFICE

Applicant: Melissa Archer et al.

Serial No.: 12/475,411 Group Art Unit: 2812

Filed: May 29, 2009 Examiner:

Confirmation No.: 3442

Title: EPITAXIAL LIFT OFF STACK HAVING A UNIVERSALLY SHRUNK HANDLE AND METHODS THEREOF

Mail Stop Petition
Commissioner for Patents
P.O Box 1450
Alexandria, VA 22313-1450

PETITION FOR RECONSIDERATION OF DISMISSAL OF PETITION TO MAKE SPECIAL UNDER THE GREEN TECHNOLOGY PILOT PROGRAM

1. Applicant hereby petitions to reconsider the dismissal of the Petition to Make Special Under the Green Technology Pilot Program ("the Petition").

2. According to the Decision on Petition to Make Special Under the Green Technology Pilot Program, the Petition was dismissed because it was contended Applicant's statement pertaining to how the materiality standard is met did not satisfy the requirements for the Green Technology Pilot Program. Applicant disagrees with this contention.

3. Applicant hereby submits a Supplemental Statement of Special Status and a Preliminary Amendment in support of this Petition for Reconsideration.

The Commissioner is hereby authorized to charge fees associated with this communication or credit any overpayment to Deposit Account No.: 50-4160.

Please direct all correspondence concerning the above-identified application to the following address:

MURABITO HAO & BARNES LLP
Two North Market Street, Third Floor
San Jose, California 95113
(408) 938-9060
74878

Respectfully submitted,

Date: 02/25/2011

By: /James P. Hao/
James P. Hao
Reg. No. 36,398

UNITED STATES PATENT AND TRADEMARK OFFICE

UNITED STATES DEPARTMENT OF COMMERCE
United States Patent and Trademark Office
Address: COMMISSIONER FOR PATENTS
P.O. Box 1450
Alexandria, Virginia 22313-1450
www.uspto.gov

APPLICATION NO.	FILING DATE	FIRST NAMED INVENTOR	ATTORNEY DOCKET NO.	CONFIRMATION NO.
12/475,411	05/29/2009	Melissa Archer	ALTA/0003US02 1884.040630	3442

99144 7590 03/09/2011
Alta Devices, Inc.
c/o Sawyer Law Group, P.C.
P.O. Box 51418
Palo Alto, CA 94303

EXAMINER
LUKE, DANIEL M

ART UNIT	PAPER NUMBER
2813	

NOTIFICATION DATE	DELIVERY MODE
03/09/2011	ELECTRONIC

Please find below and/or attached an Office communication concerning this application or proceeding.

The time period for reply, if any, is set in the attached communication.

Notice of the Office communication was sent electronically on above-indicated "Notification Date" to the following e-mail address(es):

patent@sawyerlawgroup.com

UNITED STATES PATENT AND TRADEMARK OFFICE

Commissioner for Patents
United States Patent and Trademark Office
P.O. Box 1450
Alexandria, VA 22313-1450
www.uspto.gov

Alta Devices, Inc.
c/o Sawyer Law Group, P.C.
P.O. Box 51418
Palo Alto CA 94303

In re Application of	:	
ARCHER et al.	:	DECISION ON PETITION
Application No. 12/475,411	:	TO MAKE SPECIAL UNDER
Filed: May 29, 2009	:	THE GREEN TECHNOLOGY
Attorney Docket No. ALTA/0003US02 1884.040630	:	PILOT PROGRAM

This is a decision on the petition under 37 CFR 1.102, filed on January 18, 2011 and renewed on February 25, 2011, to make the above-identified application special under the pilot program for applications pertaining to Green Technologies as set forth 74 Federal Register Notice 64666 (December 8, 2009) and amended by 75 Federal Register Notice 28554 (May 21, 2010) and 75 Federal Register Notice 69049 (November 10, 2010).

The petition is **GRANTED**.

A grantable petition to make an application special under 37 CFR 1.102 and the pilot program as set forth in 74 FR 64666 must be directed to a nonprovisional application filed under 35 USC 111(a) or be a national stage entry under 35 USC 371, exclusive of any reissue applications.

In order to qualify for special status, the following requirements must be met. 1) The application must have no more than 3 independent claims and no more than 20 total claims. 2) The application must not contain any multiple dependent claims. 3) The petition must state the basis for seeking special status, i.e., the claimed invention either: A) materially enhances the quality of the environment or B) materially contributes to: i) the discovery or development of renewable energy resources, ii) the more efficient utilization and conservation of energy resources, or iii) greenhouse gas emission reduction. 4) If the disclosure is not clear on its face that the claimed invention materially contributes under category (A) or (B), the petition must be accompanied by a statement by the applicant, assignee, or an attorney/agent registered to practice before the Office explaining how the materiality standard is met. 5) A statement that applicant will agree to make an election without traverse in a telephonic interview if a restriction requirement is made by the examiner. 6) The petition to make special must be filed electronically. 7) The petition must be filed at least one day prior to the date that a first Office Action appears in the Patent Application Information Retrieval (PAIR) system. 8) The petition must be accompanied by a request for early publication in compliance with 37 CFR 1.219 and include the publication fee as set forth in 37 CFR 1.18(d).

The requirement for a fee for consideration of the petition to make special for applications pertaining to Green Technologies has been waived.

The instant petition complies with items 1 – 8 above. Accordingly, the above-identified application has been accorded "special" status.

Telephone inquires concerning this decision should be directed to Lee W. Young at 571-272-4549.

The application is being forwarded to the Technology Center Art Unit 2813 for action in its regular turn.

Lee W. Young
Quality Assurance Specialist
Technology Center 2800

Doc Code: PET.GREEN
Document Description: Petition for Green Tech Pilot

PTO/SB/420 (05-10)
Approved for use through 01/31/2011. OMB 0651-0062
U.S. Patent and Trademark Office; U. S. DEPARTMENT OF COMMERCE
Under the Paperwork Reduction Act of 1995, no persons are required to respond to a collection of information unless it displays a valid OMB control number.

PETITION TO MAKE SPECIAL UNDER THE GREEN TECHNOLOGY PILOT PROGRAM

Attorney Docket Number: ALTA-0003US3 (4975P-3)	Application Number (if known): 12/475,415	Filing date: May 29, 2009

First Named Inventor: Thomas Gmitter et al.

Title: EPITAXIAL LIFT OFF STACK HAVING A UNIDIRECTIONALLY SHRUNK HANDLE AND METHODS THEREOF

APPLICANT HEREBY REQUESTS TO PARTICIPATE IN THE GREEN TECHNOLOGY PILOT PROGRAM FOR THE ABOVE-IDENTIFIED APPLICATION. See Instruction Sheet on page 2.

This petition must be timely filed electronically using the USPTO electronic filing system, EFS-Web.

1. By filing this petition:

   Applicant is requesting early publication: Applicant hereby requests early publication under 37 CFR 1.219 and the publication fee set forth in 37 CFR 1.18(d) accompanies this request.

2. By filing this petition: applicant is agreeing to make an election without traverse in a telephonic interview and elect an invention that meets the eligibility requirements set forth in the notice titled "Pilot Program for Green Technologies Including Greenhouse Gas Reduction," as modified by the notice titled "Elimination of Classification Requirement in the Green Technology Pilot Program," each of which was published in the Federal Register, if the Office determines that the claims are not obviously directed to a single invention.

3. This request is accompanied by statements of special status for the eligibility requirement.

4. The application contains no more than three (3) independent claims and twenty (20) total claims.

5. The application does not contain any multiple dependent claims.

6. Other attachments: _____

Signature /James P. Hao/	Date 1/18/2011
Name (Print/Typed) James P. Hao	Registration Number 36398

***Note**: Signatures of all the inventors or assignees of record of the entire interest or their representative(s) are required in accordance with 37 CFR 1.33 and 11.18. Please see 37 CFR 1.4(d) for the form of the signature. If necessary, submit multiple forms for more than one signature, see below*.*

☐ *Total of _____ forms are submitted.

The information is required to obtain or retain a benefit by the public which is to file (and by the USPTO to process) an application. Confidentiality is governed by 35 U.S.C. 122 and 37 CFR 1.11 and 1.14. This collection is estimated to take 1 hour to complete, including gathering, preparing, and submitting the completed application form to the USPTO. Time will vary depending upon the individual case. Any comments on the amount of time you require to complete this form and/or suggestions for reducing this burden, should be sent to the Chief Information Officer, U.S. Patent and Trademark Office, U.S. Department of Commerce, P.O. Box 1450, Alexandria, VA 22313-1450. DO NOT SEND FEES OR COMPLETED FORMS TO THIS ADDRESS. **SEND TO: Commissioner for Patents, P.O. Box 1450, Alexandria, VA 22313-1450.**

If you need assistance in completing the form, call 1-800-PTO-9199 and select option 2.

Under the Paperwork Reduction Act of 1995, no persons are required to respond to a collection of information unless it displays a valid OMB control number.

Instruction Sheet for Petition to Make Special Under the Green Technology Pilot Program

(Not to be Submitted to the USPTO)

The following is a summary of the requirements (for more information see the notices (i) "Pilot Program for Green Technologies Including Greenhouse Gas Reduction" and (ii) "Elimination of Classification Requirement in the Green Technology Pilot Program," available on the USPTO web site at http://www.uspto.gov/patents/init_events/green_tech.jsp):

(1) The application must be a non-reissue, non-provisional utility application filed under 35 U.S.C. 111(a), or an international application that has entered the national stage in compliance with 35 U.S.C. 371. The application must be previously filed before the publication date of the notice cited above. Reexamination proceedings are excluded from this pilot program.

(2) The application must contain three or fewer independent claims and twenty or fewer total claims. The application must not contain any multiple dependent claims. For an application that contains more than three independent claims or twenty total claims, or multiple dependent claims, applicant must file a preliminary amendment in compliance with 37 CFR 1.121 to cancel the excess claims and/or the multiple dependent claims at the time the petition to make special is filed.

(3) The claims must be directed to a single invention that materially enhances the quality of the environment, or that materially contributes to: (1) the discovery or development of renewable energy resources; (2) the more efficient utilization and conservation of energy resources; or (3) green house gas emission reduction (see the eligibility requirements of sections II and III of the notice (i) cited above). The petition must include a statement that, if the USPTO determines that the claims are directed to multiple inventions (e.g., in a restriction requirement), applicant will agree to make an election without traverse in a telephonic interview, and elect an invention that meets the eligibility requirements in section II or III of the notice (i) cited above.

(4) The petition to make special must be timely filed electronically using the USPTO electronic filing system, EFS-Web, and selecting the document description of "Petition for Green Tech Pilot" on the EFS-Web screen. Applicant should use form PTO/SB/420, which is available as a Portable Document Format (PDF) fillable form in EFS-Web and on the USPTO Web site.

(5) The petition to make special must be filed at least one day prior to the date that a first Office action (which may be an Office action containing only a restriction requirement) appears in the Patent Application Information Retrieval (PAIR) system. Applicant may check the status of the application using PAIR.

(6) The petition to make special must be accompanied by a request for early publication in compliance with 37 CFR 1.219 and the publication fee set forth in 37 CFR 1.18(d).

Privacy Act Statement

The **Privacy Act of 1974 (P.L. 93-579)** requires that you be given certain information in connection with your submission of the attached form related to a patent application or patent. Accordingly, pursuant to the requirements of the Act, please be advised that: (1) the general authority for the collection of this information is 35 U.S.C. 2(b)(2); (2) furnishing of the information solicited is voluntary; and (3) the principal purpose for which the information is used by the U.S. Patent and Trademark Office is to process and/or examine your submission related to a patent application or patent. If you do not furnish the requested information, the U.S. Patent and Trademark Office may not be able to process and/or examine your submission, which may result in termination of proceedings or abandonment of the application or expiration of the patent.

The information provided by you in this form will be subject to the following routine uses:

1. The information on this form will be treated confidentially to the extent allowed under the Freedom of Information Act (5 U.S.C. 552) and the Privacy Act (5 U.S.C 552a). Records from this system of records may be disclosed to the Department of Justice to determine whether disclosure of these records is required by the Freedom of Information Act.
2. A record from this system of records may be disclosed, as a routine use, in the course of presenting evidence to a court, magistrate, or administrative tribunal, including disclosures to opposing counsel in the course of settlement negotiations.
3. A record in this system of records may be disclosed, as a routine use, to a Member of Congress submitting a request involving an individual, to whom the record pertains, when the individual has requested assistance from the Member with respect to the subject matter of the record.
4. A record in this system of records may be disclosed, as a routine use, to a contractor of the Agency having need for the information in order to perform a contract. Recipients of information shall be required to comply with the requirements of the Privacy Act of 1974, as amended, pursuant to 5 U.S.C. 552a(m).
5. A record related to an International Application filed under the Patent Cooperation Treaty in this system of records may be disclosed, as a routine use, to the International Bureau of the World Intellectual Property Organization, pursuant to the Patent Cooperation Treaty.
6. A record in this system of records may be disclosed, as a routine use, to another federal agency for purposes of National Security review (35 U.S.C. 181) and for review pursuant to the Atomic Energy Act (42 U.S.C. 218(c)).
7. A record from this system of records may be disclosed, as a routine use, to the Administrator, General Services, or his/her designee, during an inspection of records conducted by GSA as part of that agency's responsibility to recommend improvements in records management practices and programs, under authority of 44 U.S.C. 2904 and 2906. Such disclosure shall be made in accordance with the GSA regulations governing inspection of records for this purpose, and any other relevant (*i.e.*, GSA or Commerce) directive. Such disclosure shall not be used to make determinations about individuals.
8. A record from this system of records may be disclosed, as a routine use, to the public after either publication of the application pursuant to 35 U.S.C. 122(b) or issuance of a patent pursuant to 35 U.S.C. 151. Further, a record may be disclosed, subject to the limitations of 37 CFR 1.14, as a routine use, to the public if the record was filed in an application which became abandoned or in which the proceedings were terminated and which application is referenced by either a published application, an application open to public inspection or an issued patent.
9. A record from this system of records may be disclosed, as a routine use, to a Federal, State, or local law enforcement agency, if the USPTO becomes aware of a violation or potential violation of law or regulation.

UNITED STATES PATENT AND TRADEMARK OFFICE

UNITED STATES DEPARTMENT OF COMMERCE
United States Patent and Trademark Office
Address: COMMISSIONER FOR PATENTS
P.O. Box 1450
Alexandria, Virginia 22313-1450
www.uspto.gov

APPLICATION NO.	FILING DATE	FIRST NAMED INVENTOR	ATTORNEY DOCKET NO.	CONFIRMATION NO.
12/475,415	05/29/2009	Thomas Gmitter	ALTA/0003US03	3448

99144 7590 02/01/2011
Alta Devices, Inc.
c/o Sawyer Law Group, P.C.
P.O. Box 51418
Palo Alto, CA 94303

EXAMINER
AHMAD, KHAJA

ART UNIT	PAPER NUMBER
4145	

NOTIFICATION DATE	DELIVERY MODE
02/01/2011	ELECTRONIC

Please find below and/or attached an Office communication concerning this application or proceeding.

The time period for reply, if any, is set in the attached communication.

Notice of the Office communication was sent electronically on above-indicated "Notification Date" to the following e-mail address(es):

patent@sawyerlawgroup.com

UNITED STATES PATENT AND TRADEMARK OFFICE

Commissioner for Patents
United States Patent and Trademark Office
P.O. Box 1450
Alexandria, VA 22313-1450
www.uspto.gov

02/01/2011

Alta Devices, Inc.
c/o Sawyer Law Group, P.C.
P.O. Box 51418
Palo Alto CA 94303

In re Application of	:	
Gmitter et al.	:	DECISION ON PETITION
Application No. 12/475,415	:	TO MAKE SPECIAL UNDER
Filed: 5/29/2009	:	THE GREEN TECHNOLOGY
Attorney Docket No. **ALTA/0003US03**	:	PILOT PROGRAM

This is a decision on the petition under 37 CFR 1.102, filed 1/18/2011, to make the above-identified application special under the pilot program for applications pertaining to Green Technologies as set forth in 74 Federal Register Notice 64666 (December 8, 2009) and amended by 75 Federal Register Notice 28554 (May 21, 2010) and 75 Federal Register Notice 69049 (November 10, 2010).

The petition is **GRANTED**.

A grantable petition to make an application special under 37 CFR 1.102 and the pilot program as set forth in 74 FR 64666 must be directed to a nonprovisional application filed under 35 USC 111(a) or be a national stage entry under 35 USC 371, exclusive of any reissue applications.

In order to qualify for special status, the following requirements must be met. 1) The application must have no more than 3 independent claims and no more than 20 total claims. 2) The application must not contain any multiple dependent claims. 3) The petition must state the basis for seeking special status, i.e., the claimed invention either: A) materially enhances the quality of the environment or B) materially contributes to: i) the discovery or development of renewable energy resources, ii) the more efficient utilization and conservation of energy resources, or iii) greenhouse gas emission reduction. 4) If the disclosure is not clear on its face that the claimed invention materially contributes under category (A) or (B), the petition must be accompanied by a statement by the applicant, assignee, or an attorney/agent registered to practice before the Office explaining how the materiality standard is met. 5) A statement that applicant will agree to make an election without traverse in a telephonic interview if a restriction requirement is made by the examiner. 6) The petition to make special must be filed electronically. 7) The petition must be filed at least one day prior to the date that a first Office Action appears in the Patent Application Information Retrieval (PAIR) system. 8) The petition must be accompanied by a

request for early publication in compliance with 37 CFR 1.219 and include the publication fee as set forth in 37 CFR 1.18(d).

The requirement for a fee for consideration of the petition to make special for applications pertaining to Green Technologies has been waived.

The instant petition complies with items 1 – 8 above. Accordingly, the above-identified application has been accorded "special" status.

Telephone inquires concerning this decision should be directed to Tom Dunn at 571-272-1171.

The application is being forwarded to the Technology Center Art Unit 4145 for action on the merits commensurate with this decision.

/Tom Dunn/

Tom Dunn
Quality Assurance Specialist
Technology Center 1700

Doc Code: PET.GREEN
Document Description: Petition for Green Tech Pilot

PTO/SB/420 (05-10)
Approved for use through 01/31/2011. OMB 0651-0062
U.S. Patent and Trademark Office; U. S. DEPARTMENT OF COMMERCE
Under the Paperwork Reduction Act of 1995, no persons are required to respond to a collection of information unless it displays a valid OMB control number.

PETITION TO MAKE SPECIAL UNDER THE GREEN TECHNOLOGY PILOT PROGRAM

Attorney Docket Number: ALTA-0003US4 (4975P-4)	Application Number (if known): 12/475,418	Filing date: May 29, 2009

First Named Inventor: Thomas Gmitter et al.

Title: EPITAXIAL LIFT OFF STACK HAVING A NON-UNIFORM HANDLE AND METHODS THEREOF

APPLICANT HEREBY REQUESTS TO PARTICIPATE IN THE GREEN TECHNOLOGY PILOT PROGRAM FOR THE ABOVE-IDENTIFIED APPLICATION. See Instruction Sheet on page 2.

This petition must be timely filed electronically using the USPTO electronic filing system, EFS-Web.

1. By filing this petition:

   Applicant is requesting early publication: Applicant hereby requests early publication under 37 CFR 1.219 and the publication fee set forth in 37 CFR 1.18(d) accompanies this request.

2. By filing this petition: applicant is agreeing to make an election without traverse in a telephonic interview and elect an invention that meets the eligibility requirements set forth in the notice titled "Pilot Program for Green Technologies Including Greenhouse Gas Reduction," as modified by the notice titled "Elimination of Classification Requirement in the Green Technology Pilot Program," each of which was published in the Federal Register, if the Office determines that the claims are not obviously directed to a single invention.

3. This request is accompanied by statements of special status for the eligibility requirement.

4. The application contains no more than three (3) independent claims and twenty (20) total claims.

5. The application does not contain any multiple dependent claims.

6. Other attachments: _____

Signature /James P. Hao/	Date 1/18/2011
Name (Print/Typed) James P. Hao	Registration Number 36398

***Note**: Signatures of all the inventors or assignees of record of the entire interest or their representative(s) are required in accordance with 37 CFR 1.33 and 11.18. Please see 37 CFR 1.4(d) for the form of the signature. If necessary, submit multiple forms for more than one signature, see below*.*

☐ *Total of _____ forms are submitted.

The information is required to obtain or retain a benefit by the public which is to file (and by the USPTO to process) an application. Confidentiality is governed by 35 U.S.C. 122 and 37 CFR 1.11 and 1.14. This collection is estimated to take 1 hour to complete, including gathering, preparing, and submitting the completed application form to the USPTO. Time will vary depending upon the individual case. Any comments on the amount of time you require to complete this form and/or suggestions for reducing this burden, should be sent to the Chief Information Officer, U.S. Patent and Trademark Office, U.S. Department of Commerce, P.O. Box 1450, Alexandria, VA 22313-1450. DO NOT SEND FEES OR COMPLETED FORMS TO THIS ADDRESS. **SEND TO: Commissioner for Patents, P.O. Box 1450, Alexandria, VA 22313-1450.**

If you need assistance in completing the form, call 1-800-PTO-9199 and select option 2.

Under the Paperwork Reduction Act of 1995, no persons are required to respond to a collection of information unless it displays a valid OMB control number.

Instruction Sheet for Petition to Make Special Under the Green Technology Pilot Program

(Not to be Submitted to the USPTO)

The following is a summary of the requirements (for more information see the notices (i) "Pilot Program for Green Technologies Including Greenhouse Gas Reduction" and (ii) "Elimination of Classification Requirement in the Green Technology Pilot Program," available on the USPTO web site at http://www.uspto.gov/patents/init_events/green_tech.jsp):

(1) The application must be a non-reissue, non-provisional utility application filed under 35 U.S.C. 111(a), or an international application that has entered the national stage in compliance with 35 U.S.C. 371. The application must be previously filed before the publication date of the notice cited above. Reexamination proceedings are excluded from this pilot program.

(2) The application must contain three or fewer independent claims and twenty or fewer total claims. The application must not contain any multiple dependent claims. For an application that contains more than three independent claims or twenty total claims, or multiple dependent claims, applicant must file a preliminary amendment in compliance with 37 CFR 1.121 to cancel the excess claims and/or the multiple dependent claims at the time the petition to make special is filed.

(3) The claims must be directed to a single invention that materially enhances the quality of the environment, or that materially contributes to: (1) the discovery or development of renewable energy resources; (2) the more efficient utilization and conservation of energy resources; or (3) green house gas emission reduction (see the eligibility requirements of sections II and III of the notice (i) cited above). The petition must include a statement that, if the USPTO determines that the claims are directed to multiple inventions (e.g., in a restriction requirement), applicant will agree to make an election without traverse in a telephonic interview, and elect an invention that meets the eligibility requirements in section II or III of the notice (i) cited above.

(4) The petition to make special must be timely filed electronically using the USPTO electronic filing system, EFS-Web, and selecting the document description of "Petition for Green Tech Pilot" on the EFS-Web screen. Applicant should use form PTO/SB/420, which is available as a Portable Document Format (PDF) fillable form in EFS-Web and on the USPTO Web site.

(5) The petition to make special must be filed at least one day prior to the date that a first Office action (which may be an Office action containing only a restriction requirement) appears in the Patent Application Information Retrieval (PAIR) system. Applicant may check the status of the application using PAIR.

(6) The petition to make special must be accompanied by a request for early publication in compliance with 37 CFR 1.219 and the publication fee set forth in 37 CFR 1.18(d).

Privacy Act Statement

The **Privacy Act of 1974 (P.L. 93-579)** requires that you be given certain information in connection with your submission of the attached form related to a patent application or patent. Accordingly, pursuant to the requirements of the Act, please be advised that: (1) the general authority for the collection of this information is 35 U.S.C. 2(b)(2); (2) furnishing of the information solicited is voluntary; and (3) the principal purpose for which the information is used by the U.S. Patent and Trademark Office is to process and/or examine your submission related to a patent application or patent. If you do not furnish the requested information, the U.S. Patent and Trademark Office may not be able to process and/or examine your submission, which may result in termination of proceedings or abandonment of the application or expiration of the patent.

The information provided by you in this form will be subject to the following routine uses:

1. The information on this form will be treated confidentially to the extent allowed under the Freedom of Information Act (5 U.S.C. 552) and the Privacy Act (5 U.S.C 552a). Records from this system of records may be disclosed to the Department of Justice to determine whether disclosure of these records is required by the Freedom of Information Act.
2. A record from this system of records may be disclosed, as a routine use, in the course of presenting evidence to a court, magistrate, or administrative tribunal, including disclosures to opposing counsel in the course of settlement negotiations.
3. A record in this system of records may be disclosed, as a routine use, to a Member of Congress submitting a request involving an individual, to whom the record pertains, when the individual has requested assistance from the Member with respect to the subject matter of the record.
4. A record in this system of records may be disclosed, as a routine use, to a contractor of the Agency having need for the information in order to perform a contract. Recipients of information shall be required to comply with the requirements of the Privacy Act of 1974, as amended, pursuant to 5 U.S.C. 552a(m).
5. A record related to an International Application filed under the Patent Cooperation Treaty in this system of records may be disclosed, as a routine use, to the International Bureau of the World Intellectual Property Organization, pursuant to the Patent Cooperation Treaty.
6. A record in this system of records may be disclosed, as a routine use, to another federal agency for purposes of National Security review (35 U.S.C. 181) and for review pursuant to the Atomic Energy Act (42 U.S.C. 218(c)).
7. A record from this system of records may be disclosed, as a routine use, to the Administrator, General Services, or his/her designee, during an inspection of records conducted by GSA as part of that agency's responsibility to recommend improvements in records management practices and programs, under authority of 44 U.S.C. 2904 and 2906. Such disclosure shall be made in accordance with the GSA regulations governing inspection of records for this purpose, and any other relevant (*i.e.*, GSA or Commerce) directive. Such disclosure shall not be used to make determinations about individuals.
8. A record from this system of records may be disclosed, as a routine use, to the public after either publication of the application pursuant to 35 U.S.C. 122(b) or issuance of a patent pursuant to 35 U.S.C. 151. Further, a record may be disclosed, subject to the limitations of 37 CFR 1.14, as a routine use, to the public if the record was filed in an application which became abandoned or in which the proceedings were terminated and which application is referenced by either a published application, an application open to public inspection or an issued patent.
9. A record from this system of records may be disclosed, as a routine use, to a Federal, State, or local law enforcement agency, if the USPTO becomes aware of a violation or potential violation of law or regulation.

UNITED STATES PATENT AND TRADEMARK OFFICE

UNITED STATES DEPARTMENT OF COMMERCE
United States Patent and Trademark Office
Address: COMMISSIONER FOR PATENTS
P.O. Box 1450
Alexandria, Virginia 22313-1450
www.uspto.gov

APPLICATION NO.	FILING DATE	FIRST NAMED INVENTOR	ATTORNEY DOCKET NO.	CONFIRMATION NO.
12/475,418	05/29/2009	Thomas Gmitter	ALTA/0003US04	3455

99144 7590 01/26/2011
Alta Devices, Inc.
c/o Sawyer Law Group, P.C.
P.O. Box 51418
Palo Alto, CA 94303

EXAMINER
PRENTY, MARK V

ART UNIT	PAPER NUMBER
2822	

NOTIFICATION DATE	DELIVERY MODE
01/26/2011	ELECTRONIC

Please find below and/or attached an Office communication concerning this application or proceeding.

The time period for reply, if any, is set in the attached communication.

Notice of the Office communication was sent electronically on above-indicated "Notification Date" to the following e-mail address(es):

patent@sawyerlawgroup.com

UNITED STATES PATENT AND TRADEMARK OFFICE

Commissioner for Patents
United States Patent and Trademark Office
P.O. Box 1450
Alexandria, VA 22313-1450
www.uspto.gov

Alta Devices, Inc.
c/o Sawyer Law Group, P.C.
P.O. Box 51418
Palo Alto CA 94303

In re Application of	:	
GMITTER et al.	:	DECISION ON PETITION
Application No. 12/475,418	:	TO MAKE SPECIAL UNDER
Filed: May 29, 2009	:	THE GREEN TECHNOLOGY
Attorney Docket No. ALTA/0003US04	:	PILOT PROGRAM

This is a decision on the petition under 37 CFR 1.102, filed on January 18, 2011, to make the above-identified application special under the pilot program for applications pertaining to Green Technologies as set forth 74 Federal Register Notice 64666 (December 8, 2009) and amended by 75 Federal Register Notice 28554 (May 21, 2010) and 75 Federal Register Notice 69049 (November 10, 2010).

The petition is **DISMISSED**.

If reconsideration of this decision is desired, a petition for reconsideration must be filed within ONE (1) MONTH OR THIRTY (30) DAYS from the mail date of this decision, whichever is longer. No extension of this time limit can be granted under 37 CFR 1.136(a) or (b). The petition for reconsideration should include an exhaustive attempt to provide the lacking item(s) noted below, since, after a decision on the petition for reconsideration, no further reconsideration or review of the matter will be undertaken by the Director.

A grantable petition to make an application special under 37 CFR 1.102 and the pilot program as set forth in 74 FR 64666 must be directed to a nonprovisional application filed under 35 USC 111(a) or be a national stage entry under 35 USC 371, exclusive of any reissue applications and be filed prior to the date of the notice, December 8, 2009.

In order to qualify for special status, the following requirements must be met. 1) The application must have no more than 3 independent claims and no more than 20 total claims. 2) The application must not contain any multiple dependent claims. 3) The petition must state the basis for seeking special status, i.e., the claimed invention either: A) materially enhances the quality of the environment or B) materially contributes to: i) the discovery or development of renewable energy resources, ii) the more efficient utilization and conservation of energy resources, or iii) greenhouse gas emission reduction. 4) If the disclosure is not clear on its face that the claimed invention materially contributes under category (A) or (B), the petition must be accompanied by a statement by the applicant, assignee, or an attorney/agent registered to practice before the

Office explaining how the materiality standard is met. 5) A statement that applicant will agree to make an election without traverse in a telephonic interview if a restriction requirement is made by the examiner. 6) The petition to make special must be filed electronically. 7) The petition must be filed at least one day prior to the date that a first Office Action appears in the Patent Application Information Retrieval (PAIR) system. 8) The petition must be accompanied by a request for early publication in compliance with 37 CFR 1.219 and include the publication fee as set forth in 37 CFR 1.18(d).

The requirement for a fee for consideration of the petition to make special for applications pertaining to Green Technologies has been waived.

The petition lacks item 4.

In regard to item 4, applicant's statement pertaining to how the materiality standard is met does not satisfy the requirements for this pilot. The instant petition includes a statement identifying the basis for the special status as contributing to the development of renewable energy resources and more efficient utilization and conservation of energy. The materiality standard does not permit an applicant to speculate as to how a hypothetical end-user might specially apply the invention in a manner that could contribute to the development of renewable resources or more efficient utilization and conservation of energy. The claims generally relate to a method of making a thin film. The recitation of the solar device in the claims is considered intended use. Any argument that the claimed invention can be used with solar devices is considered speculate as to how a hypothetical end-user might specially apply the claimed invention. Further, promoting the utilization of solar energy is not more efficient utilization and conservation of energy.

Any reconsideration of this decision should be submitted through the USPTO electronic filing system, EFS-Web, and selecting the document description of "Petition for Green Tech Pilot" on the EFS-Web screen.

Telephone inquiries concerning this decision should be directed to Lee W. Young at 571-272-4549.

The application is being forwarded to the Technology Center Art Unit 2822 for action in its regular turn.

Lee W. Young
Quality Assurance Specialist
Technology Center 2800

ALTA-0003US4 (4975P-4)
12/475,418

IN THE UNITED STATES PATENT AND TRADEMARK OFFICE

Applicant: Thomas Gmitter et al.

Serial No.: 12/475,418 Group Art Unit: 2812

Filed: May 29, 2009 Examiner:

Confirmation No.: 3455

Title: EPITAXIAL LIFT OFF STACK HAVING A NON-UNIFORM HANDLE AND METHODS THEREOF

Mail Stop Petition
Commissioner for Patents
P.O Box 1450
Alexandria, VA 22313-1450

PETITION FOR RECONSIDERATION OF DISMISSAL OF PETITION TO MAKE SPECIAL UNDER THE GREEN TECHNOLOGY PILOT PROGRAM

1. Applicant hereby petitions to reconsider the dismissal of the Petition to Make Special Under the Green Technology Pilot Program ("the Petition").

2. According to the Decision on Petition to Make Special Under the Green Technology Pilot Program, the Petition was dismissed because it was contended Applicant's statement pertaining to how the materiality standard is met did not satisfy the requirements for the Green Technology Pilot Program. Applicant disagrees with this contention.

3. Applicant hereby submits a Supplemental Statement of Special Status and a Preliminary Amendment in support of this Petition for Reconsideration.

The Commissioner is hereby authorized to charge fees associated with this communication or credit any overpayment to Deposit Account No.: 50-4160.

Please direct all correspondence concerning the above-identified application to the following address:

MURABITO HAO & BARNES LLP
Two North Market Street, Third Floor
San Jose, California 95113
(408) 938-9060
74878

Respectfully submitted,

Date: 02/25/2011

By: /James P. Hao/
James P. Hao
Reg. No. 36,398

UNITED STATES PATENT AND TRADEMARK OFFICE

UNITED STATES DEPARTMENT OF COMMERCE
United States Patent and Trademark Office
Address: COMMISSIONER FOR PATENTS
P.O. Box 1450
Alexandria, Virginia 22313-1450
www.uspto.gov

APPLICATION NO.	FILING DATE	FIRST NAMED INVENTOR	ATTORNEY DOCKET NO.	CONFIRMATION NO.
12/475,418	05/29/2009	Thomas Gmitter	ALTA/0003US04	3455

99144 7590 03/09/2011
Alta Devices, Inc.
c/o Sawyer Law Group, P.C.
P.O. Box 51418
Palo Alto, CA 94303

EXAMINER
PRENTY, MARK V

ART UNIT	PAPER NUMBER
2822	

NOTIFICATION DATE	DELIVERY MODE
03/09/2011	ELECTRONIC

Please find below and/or attached an Office communication concerning this application or proceeding.

The time period for reply, if any, is set in the attached communication.

Notice of the Office communication was sent electronically on above-indicated "Notification Date" to the following e-mail address(es):

patent@sawyerlawgroup.com

UNITED STATES PATENT AND TRADEMARK OFFICE

Commissioner for Patents
United States Patent and Trademark Office
P.O. Box 1450
Alexandria, VA 22313-1450
www.uspto.gov

Alta Devices, Inc.
c/o Sawyer Law Group, P.C.
P.O. Box 51418
Palo Alto CA 94303

In re Application of	:	
GMITTER et al.	:	DECISION ON PETITION
Application No. 12/475,418	:	TO MAKE SPECIAL UNDER
Filed: May 29, 2009	:	THE GREEN TECHNOLOGY
Attorney Docket No. ALTA/0003US04	:	PILOT PROGRAM

This is a decision on the petition under 37 CFR 1.102, filed on January 18, 2011 and renewed on February 25, 2011, to make the above-identified application special under the pilot program for applications pertaining to Green Technologies as set forth 74 Federal Register Notice 64666 (December 8, 2009) and amended by 75 Federal Register Notice 28554 (May 21, 2010) and 75 Federal Register Notice 69049 (November 10, 2010).

The petition is **GRANTED**.

A grantable petition to make an application special under 37 CFR 1.102 and the pilot program as set forth in 74 FR 64666 must be directed to a nonprovisional application filed under 35 USC 111(a) or be a national stage entry under 35 USC 371, exclusive of any reissue applications.

In order to qualify for special status, the following requirements must be met. 1) The application must have no more than 3 independent claims and no more than 20 total claims. 2) The application must not contain any multiple dependent claims. 3) The petition must state the basis for seeking special status, i.e., the claimed invention either: A) materially enhances the quality of the environment or B) materially contributes to: i) the discovery or development of renewable energy resources, ii) the more efficient utilization and conservation of energy resources, or iii) greenhouse gas emission reduction. 4) If the disclosure is not clear on its face that the claimed invention materially contributes under category (A) or (B), the petition must be accompanied by a statement by the applicant, assignee, or an attorney/agent registered to practice before the Office explaining how the materiality standard is met. 5) A statement that applicant will agree to make an election without traverse in a telephonic interview if a restriction requirement is made by the examiner. 6) The petition to make special must be filed electronically. 7) The petition must be filed at least one day prior to the date that a first Office Action appears in the Patent Application Information Retrieval (PAIR) system. 8) The petition must be accompanied by a request for early publication in compliance with 37 CFR 1.219 and include the publication fee as set forth in 37 CFR 1.18(d).

The requirement for a fee for consideration of the petition to make special for applications pertaining to Green Technologies has been waived.

The instant petition complies with items 1 – 8 above. Accordingly, the above-identified application has been accorded "special" status.

Telephone inquires concerning this decision should be directed to Lee W. Young at 571-272-4549.

The application is being forwarded to the Technology Center Art Unit 2822 for action in its regular turn.

Lee W. Young
Quality Assurance Specialist
Technology Center 2800

Doc Code: PET.GREEN
Document Description: Petition for Green Tech Pilot

PTO/SB/420 (05-10)
Approved for use through 01/31/2011. OMB 0651-0062
U.S. Patent and Trademark Office; U. S. DEPARTMENT OF COMMERCE
Under the Paperwork Reduction Act of 1995, no persons are required to respond to a collection of information unless it displays a valid OMB control number.

PETITION TO MAKE SPECIAL UNDER THE GREEN TECHNOLOGY PILOT PROGRAM

Attorney Docket Number: ALTA-0003US5 (4975P-5)	Application Number (if known): 12/475,420	Filing date: May 29, 2009

First Named Inventor: Thomas Gmitter et al.

Title: EPITAXIAL LIFT OFF STACK HAVING A MULTI-LAYERED HANDLE AND METHODS THEREOF

APPLICANT HEREBY REQUESTS TO PARTICIPATE IN THE GREEN TECHNOLOGY PILOT PROGRAM FOR THE ABOVE-IDENTIFIED APPLICATION. See Instruction Sheet on page 2.

This petition must be timely filed electronically using the USPTO electronic filing system, EFS-Web.

1. By filing this petition:

   Applicant is requesting early publication: Applicant hereby requests early publication under 37 CFR 1.219 and the publication fee set forth in 37 CFR 1.18(d) accompanies this request.

2. By filing this petition: applicant is agreeing to make an election without traverse in a telephonic interview and elect an invention that meets the eligibility requirements set forth in the notice titled "Pilot Program for Green Technologies Including Greenhouse Gas Reduction," as modified by the notice titled "Elimination of Classification Requirement in the Green Technology Pilot Program," each of which was published in the Federal Register, if the Office determines that the claims are not obviously directed to a single invention.

3. This request is accompanied by statements of special status for the eligibility requirement.

4. The application contains no more than three (3) independent claims and twenty (20) total claims.

5. The application does not contain any multiple dependent claims.

6. Other attachments: _____

Signature /James P. Hao/	Date 1/18/2011
Name (Print/Typed) James P. Hao	Registration Number 36398

***Note**: Signatures of all the inventors or assignees of record of the entire interest or their representative(s) are required in accordance with 37 CFR 1.33 and 11.18. Please see 37 CFR 1.4(d) for the form of the signature. If necessary, submit multiple forms for more than one signature, see below*.*

☐ *Total of _____ forms are submitted.

The information is required to obtain or retain a benefit by the public which is to file (and by the USPTO to process) an application. Confidentiality is governed by 35 U.S.C. 122 and 37 CFR 1.11 and 1.14. This collection is estimated to take 1 hour to complete, including gathering, preparing, and submitting the completed application form to the USPTO. Time will vary depending upon the individual case. Any comments on the amount of time you require to complete this form and/or suggestions for reducing this burden, should be sent to the Chief Information Officer, U.S. Patent and Trademark Office, U.S. Department of Commerce, P.O. Box 1450, Alexandria, VA 22313-1450. DO NOT SEND FEES OR COMPLETED FORMS TO THIS ADDRESS. **SEND TO: Commissioner for Patents, P.O. Box 1450, Alexandria, VA 22313-1450.**

If you need assistance in completing the form, call 1-800-PTO-9199 and select option 2.

Under the Paperwork Reduction Act of 1995, no persons are required to respond to a collection of information unless it displays a valid OMB control number.

Instruction Sheet for Petition to Make Special Under the Green Technology Pilot Program

(Not to be Submitted to the USPTO)

The following is a summary of the requirements (for more information see the notices (i) "Pilot Program for Green Technologies Including Greenhouse Gas Reduction" and (ii) "Elimination of Classification Requirement in the Green Technology Pilot Program," available on the USPTO web site at http://www.uspto.gov/patents/init_events/green_tech.jsp):

(1) The application must be a non-reissue, non-provisional utility application filed under 35 U.S.C. 111(a), or an international application that has entered the national stage in compliance with 35 U.S.C. 371. The application must be previously filed before the publication date of the notice cited above. Reexamination proceedings are excluded from this pilot program.

(2) The application must contain three or fewer independent claims and twenty or fewer total claims. The application must not contain any multiple dependent claims. For an application that contains more than three independent claims or twenty total claims, or multiple dependent claims, applicant must file a preliminary amendment in compliance with 37 CFR 1.121 to cancel the excess claims and/or the multiple dependent claims at the time the petition to make special is filed.

(3) The claims must be directed to a single invention that materially enhances the quality of the environment, or that materially contributes to: (1) the discovery or development of renewable energy resources; (2) the more efficient utilization and conservation of energy resources; or (3) green house gas emission reduction (see the eligibility requirements of sections II and III of the notice (i) cited above). The petition must include a statement that, if the USPTO determines that the claims are directed to multiple inventions (e.g., in a restriction requirement), applicant will agree to make an election without traverse in a telephonic interview, and elect an invention that meets the eligibility requirements in section II or III of the notice (i) cited above.

(4) The petition to make special must be timely filed electronically using the USPTO electronic filing system, EFS-Web, and selecting the document description of "Petition for Green Tech Pilot" on the EFS-Web screen. Applicant should use form PTO/SB/420, which is available as a Portable Document Format (PDF) fillable form in EFS-Web and on the USPTO Web site.

(5) The petition to make special must be filed at least one day prior to the date that a first Office action (which may be an Office action containing only a restriction requirement) appears in the Patent Application Information Retrieval (PAIR) system. Applicant may check the status of the application using PAIR.

(6) The petition to make special must be accompanied by a request for early publication in compliance with 37 CFR 1.219 and the publication fee set forth in 37 CFR 1.18(d).

Privacy Act Statement

The **Privacy Act of 1974 (P.L. 93-579)** requires that you be given certain information in connection with your submission of the attached form related to a patent application or patent. Accordingly, pursuant to the requirements of the Act, please be advised that: (1) the general authority for the collection of this information is 35 U.S.C. 2(b)(2); (2) furnishing of the information solicited is voluntary; and (3) the principal purpose for which the information is used by the U.S. Patent and Trademark Office is to process and/or examine your submission related to a patent application or patent. If you do not furnish the requested information, the U.S. Patent and Trademark Office may not be able to process and/or examine your submission, which may result in termination of proceedings or abandonment of the application or expiration of the patent.

The information provided by you in this form will be subject to the following routine uses:

1. The information on this form will be treated confidentially to the extent allowed under the Freedom of Information Act (5 U.S.C. 552) and the Privacy Act (5 U.S.C 552a). Records from this system of records may be disclosed to the Department of Justice to determine whether disclosure of these records is required by the Freedom of Information Act.
2. A record from this system of records may be disclosed, as a routine use, in the course of presenting evidence to a court, magistrate, or administrative tribunal, including disclosures to opposing counsel in the course of settlement negotiations.
3. A record in this system of records may be disclosed, as a routine use, to a Member of Congress submitting a request involving an individual, to whom the record pertains, when the individual has requested assistance from the Member with respect to the subject matter of the record.
4. A record in this system of records may be disclosed, as a routine use, to a contractor of the Agency having need for the information in order to perform a contract. Recipients of information shall be required to comply with the requirements of the Privacy Act of 1974, as amended, pursuant to 5 U.S.C. 552a(m).
5. A record related to an International Application filed under the Patent Cooperation Treaty in this system of records may be disclosed, as a routine use, to the International Bureau of the World Intellectual Property Organization, pursuant to the Patent Cooperation Treaty.
6. A record in this system of records may be disclosed, as a routine use, to another federal agency for purposes of National Security review (35 U.S.C. 181) and for review pursuant to the Atomic Energy Act (42 U.S.C. 218(c)).
7. A record from this system of records may be disclosed, as a routine use, to the Administrator, General Services, or his/her designee, during an inspection of records conducted by GSA as part of that agency's responsibility to recommend improvements in records management practices and programs, under authority of 44 U.S.C. 2904 and 2906. Such disclosure shall be made in accordance with the GSA regulations governing inspection of records for this purpose, and any other relevant (*i.e.*, GSA or Commerce) directive. Such disclosure shall not be used to make determinations about individuals.
8. A record from this system of records may be disclosed, as a routine use, to the public after either publication of the application pursuant to 35 U.S.C. 122(b) or issuance of a patent pursuant to 35 U.S.C. 151. Further, a record may be disclosed, subject to the limitations of 37 CFR 1.14, as a routine use, to the public if the record was filed in an application which became abandoned or in which the proceedings were terminated and which application is referenced by either a published application, an application open to public inspection or an issued patent.
9. A record from this system of records may be disclosed, as a routine use, to a Federal, State, or local law enforcement agency, if the USPTO becomes aware of a violation or potential violation of law or regulation.

UNITED STATES PATENT AND TRADEMARK OFFICE

UNITED STATES DEPARTMENT OF COMMERCE
United States Patent and Trademark Office
Address: COMMISSIONER FOR PATENTS
P.O. Box 1450
Alexandria, Virginia 22313-1450
www.uspto.gov

APPLICATION NO.	FILING DATE	FIRST NAMED INVENTOR	ATTORNEY DOCKET NO.	CONFIRMATION NO.
12/475,420	05/29/2009	Thomas Gmitter	ALTA/0003US05 1884.040633	3461

99144 7590 02/01/2011
Alta Devices, Inc.
c/o Sawyer Law Group, P.C.
P.O. Box 51418
Palo Alto, CA 94303

EXAMINER
AHMAD, KHAJA

ART UNIT	PAPER NUMBER
4145	

NOTIFICATION DATE	DELIVERY MODE
02/01/2011	ELECTRONIC

Please find below and/or attached an Office communication concerning this application or proceeding.

The time period for reply, if any, is set in the attached communication.

Notice of the Office communication was sent electronically on above-indicated "Notification Date" to the following e-mail address(es):

patent@sawyerlawgroup.com

UNITED STATES PATENT AND TRADEMARK OFFICE

Commissioner for Patents
United States Patent and Trademark Office
P.O. Box 1450
Alexandria, VA 22313-1450
www.uspto.gov

2/01/2011

Alta Devices, Inc.
c/o Sawyer Law Group, P.C.
P.O. Box 51418
Palo Alto CA 94303

In re Application of	:	
Gmitter et al.	:	DECISION ON PETITION
Application No. 12/475,420	:	TO MAKE SPECIAL UNDER
Filed: 5/29/2009	:	THE GREEN TECHNOLOGY
Attorney Docket No. **ALTA/0003US05**	:	PILOT PROGRAM
1884.040633		

This is a decision on the petition under 37 CFR 1.102, filed 1/18/2011, to make the above-identified application special under the pilot program for applications pertaining to Green Technologies as set forth in 74 Federal Register Notice 64666 (December 8, 2009) and amended by 75 Federal Register Notice 28554 (May 21, 2010) and 75 Federal Register Notice 69049 (November 10, 2010).

The petition is **GRANTED**.

A grantable petition to make an application special under 37 CFR 1.102 and the pilot program as set forth in 74 FR 64666 must be directed to a nonprovisional application filed under 35 USC 111(a) or be a national stage entry under 35 USC 371, exclusive of any reissue applications.

In order to qualify for special status, the following requirements must be met. 1) The application must have no more than 3 independent claims and no more than 20 total claims. 2) The application must not contain any multiple dependent claims. 3) The petition must state the basis for seeking special status, i.e., the claimed invention either: A) materially enhances the quality of the environment or B) materially contributes to: i) the discovery or development of renewable energy resources, ii) the more efficient utilization and conservation of energy resources, or iii) greenhouse gas emission reduction. 4) If the disclosure is not clear on its face that the claimed invention materially contributes under category (A) or (B), the petition must be accompanied by a statement by the applicant, assignee, or an attorney/agent registered to practice before the Office explaining how the materiality standard is met. 5) A statement that applicant will agree to make an election without traverse in a telephonic interview if a restriction requirement is made by the examiner. 6) The petition to make special must be filed electronically. 7) The petition must be filed at least one day prior to the date that a first Office Action appears in the Patent Application Information Retrieval (PAIR) system. 8) The petition must be accompanied by a

request for early publication in compliance with 37 CFR 1.219 and include the publication fee as set forth in 37 CFR 1.18(d).

The requirement for a fee for consideration of the petition to make special for applications pertaining to Green Technologies has been waived.

The instant petition complies with items 1 – 8 above. Accordingly, the above-identified application has been accorded "special" status.

Telephone inquires concerning this decision should be directed to Tom Dunn at 571-272-1171.

The application is being forwarded to the Technology Center Art Unit 4145 for action on the merits commensurate with this decision.

/Tom Dunn/

Tom Dunn
Quality Assurance Specialist
Technology Center 1700

UNITED STATES PATENT AND TRADEMARK OFFICE

Commissioner for Patents
United States Patent and Trademark Office
P.O. Box 1450
Alexandria, VA 22313-1450
www.uspto.gov

HITACHI C/O WAGNER BLECHER LLP
123 WESTRIDGE DRIVE
WATSONVILLE CA 95076

MAILED

DEC 03 2010

OFFICE OF PETITIONS

In re Application of	:	
Nakamura et al.	:	
Application No. 12/475,437	:	DECISION ON PETITION
Filed: May 29, 2009	:	
Attorney Docket No. HJP920080012US1	:	

This is a decision on the petition under the unintentional provisions of 37 CFR 1.137(b), filed October 27, 2010, to revive the above-identified application.

The petition is **GRANTED**.

The above-identified application became abandoned for failure to reply in a timely manner to the Notice to File Missing Parts of Nonprovisional Application (Notice) mailed June 4, 2009. The Notice set a period for reply of two (2) months from the mail date of the Notice. No extensions of time under the provisions of 37 CFR 1.136(a) were obtained. Accordingly, the above-identified application became abandoned on August 5, 2009. A Notice of Abandonment was mailed on February 19, 2010.

The petition satisfies the requirements of 37 CFR 1.137(b) in that petitioner has supplied (1) an Oath or Declaration and the $130.00 Surcharge fee; (2) the petition fee of $1,620.00, and (3) a proper statement of unintentional delay.

Telephone inquiries concerning this decision should be directed to the undersigned at (571) 272-7751.

This application is being referred to the Office of Patent Application Processing for further processing in accordance with this decision on petition.

Joan Olszewski

Joan Olszewski
Petitions Examiner
Office of Petitions

UNITED STATES PATENT AND TRADEMARK OFFICE

Commissioner for Patents
United States Patent and Trademark Office
P.O. Box 1450
Alexandria, VA 22313-1450
www.uspto.gov

ELEY LAW FIRM CO.
7870 OLENTANGY RIVER RD
SUITE 311
COLUMBUS OH 43235

MAILED

JAN 26 2012

OFFICE OF PETITIONS

In re Application of :
Alexander Isurin et al. :
Application No. 12/475,446 : ON PETITION
Filed: May 29, 2009 :
Attorney Docket No.: **E58541.051** :

This is a decision on the petition under 37 CFR 1.182, filed January 4, 2012, to change the order of the names of the inventors.

The petition is **GRANTED.**

The instant petition refers to the Application Data Sheet filed April 29, 2009, with the application, that correctly identifies the order of inventors.

The order of the names of the inventors has been changed as follows:

1) Alexander Isurin
2) Alexander Cook

A corrected filing receipt reflecting the correct order of the names of the inventors is attached.

This matter is being referred to Technology Center 2838 for further examination in due course.

Telephone inquiries concerning this matter may be directed to the undersigned Petitions Attorney at (571) 272-3212.

Patricia Faison-Ball

Patricia Faison-Ball
Senior Petitions Attorney
Office of Petitions

ATTACHMENT: Corrected Filing Receipt

UNITED STATES PATENT AND TRADEMARK OFFICE

UNITED STATES DEPARTMENT OF COMMERCE
United States Patent and Trademark Office
Address: COMMISSIONER FOR PATENTS
P.O. Box 1450
Alexandria, Virginia 22313-1450
www.uspto.gov

APPLICATION NUMBER	FILING or 371(c) DATE	GRP ART UNIT	FIL FEE REC'D	ATTY.DOCKET.NO	TOT CLAIMS	IND CLAIMS
12/475,446	05/29/2009	2838	462	E58541.051	10	3

CONFIRMATION NO. 3517

CORRECTED FILING RECEIPT

44093
ELEY LAW FIRM CO.
7870 OLENTANGY RIVER RD
SUITE 311
COLUMBUS, OH 43235

OC000000052207375

Date Mailed: 01/26/2012

Receipt is acknowledged of this non-provisional patent application. The application will be taken up for examination in due course. Applicant will be notified as to the results of the examination. Any correspondence concerning the application must include the following identification information: the U.S. APPLICATION NUMBER, FILING DATE, NAME OF APPLICANT, and TITLE OF INVENTION. Fees transmitted by check or draft are subject to collection. Please verify the accuracy of the data presented on this receipt. **If an error is noted on this Filing Receipt, please submit a written request for a Filing Receipt Correction. Please provide a copy of this Filing Receipt with the changes noted thereon. If you received a "Notice to File Missing Parts" for this application, please submit any corrections to this Filing Receipt with your reply to the Notice. When the USPTO processes the reply to the Notice, the USPTO will generate another Filing Receipt incorporating the requested corrections**

Applicant(s)

ALEXANDER ISURIN, DUBLIN, OH;
ALEXANDER COOK, DUBLIN, OH;

Assignment For Published Patent Application

VANNER, INC., HILLIARD, OH

Power of Attorney: The patent practitioners associated with Customer Number 44093

Domestic Priority data as claimed by applicant

This appln claims benefit of 61/057,641 05/30/2008

Foreign Applications (You may be eligible to benefit from the **Patent Prosecution Highway** program at the USPTO. Please see http://www.uspto.gov for more information.)

If Required, Foreign Filing License Granted: 06/08/2009

The country code and number of your priority application, to be used for filing abroad under the Paris Convention, is **US 12/475,446**

Projected Publication Date: Not Applicable

Non-Publication Request: No

Early Publication Request: No
**** SMALL ENTITY ****

Title

POWER CONVERTER LOAD LINE CONTROL

Preliminary Class

363

PROTECTING YOUR INVENTION OUTSIDE THE UNITED STATES

Since the rights granted by a U.S. patent extend only throughout the territory of the United States and have no effect in a foreign country, an inventor who wishes patent protection in another country must apply for a patent in a specific country or in regional patent offices. Applicants may wish to consider the filing of an international application under the Patent Cooperation Treaty (PCT). An international (PCT) application generally has the same effect as a regular national patent application in each PCT-member country. The PCT process **simplifies** the filing of patent applications on the same invention in member countries, but **does not result** in a grant of "an international patent" and does not eliminate the need of applicants to file additional documents and fees in countries where patent protection is desired.

Almost every country has its own patent law, and a person desiring a patent in a particular country must make an application for patent in that country in accordance with its particular laws. Since the laws of many countries differ in various respects from the patent law of the United States, applicants are advised to seek guidance from specific foreign countries to ensure that patent rights are not lost prematurely.

Applicants also are advised that in the case of inventions made in the United States, the Director of the USPTO must issue a license before applicants can apply for a patent in a foreign country. The filing of a U.S. patent application serves as a request for a foreign filing license. The application's filing receipt contains further information and guidance as to the status of applicant's license for foreign filing.

Applicants may wish to consult the USPTO booklet, "General Information Concerning Patents" (specifically, the section entitled "Treaties and Foreign Patents") for more information on timeframes and deadlines for filing foreign patent applications. The guide is available either by contacting the USPTO Contact Center at 800-786-9199, or it can be viewed on the USPTO website at http://www.uspto.gov/web/offices/pac/doc/general/index.html.

For information on preventing theft of your intellectual property (patents, trademarks and copyrights), you may wish to consult the U.S. Government website, http://www.stopfakes.gov. Part of a Department of Commerce initiative, this website includes self-help "toolkits" giving innovators guidance on how to protect intellectual property in specific countries such as China, Korea and Mexico. For questions regarding patent enforcement issues, applicants may call the U.S. Government hotline at 1-866-999-HALT (1-866-999-4158).

LICENSE FOR FOREIGN FILING UNDER

Title 35, United States Code, Section 184

Title 37, Code of Federal Regulations, 5.11 & 5.15

GRANTED

The applicant has been granted a license under 35 U.S.C. 184, if the phrase "IF REQUIRED, FOREIGN FILING LICENSE GRANTED" followed by a date appears on this form. Such licenses are issued in all applications where the conditions for issuance of a license have been met, regardless of whether or not a license may be required as

set forth in 37 CFR 5.15. The scope and limitations of this license are set forth in 37 CFR 5.15(a) unless an earlier license has been issued under 37 CFR 5.15(b). The license is subject to revocation upon written notification. The date indicated is the effective date of the license, unless an earlier license of similar scope has been granted under 37 CFR 5.13 or 5.14.

This license is to be retained by the licensee and may be used at any time on or after the effective date thereof unless it is revoked. This license is automatically transferred to any related applications(s) filed under 37 CFR 1.53(d). This license is not retroactive.

The grant of a license does not in any way lessen the responsibility of a licensee for the security of the subject matter as imposed by any Government contract or the provisions of existing laws relating to espionage and the national security or the export of technical data. Licensees should apprise themselves of current regulations especially with respect to certain countries, of other agencies, particularly the Office of Defense Trade Controls, Department of State (with respect to Arms, Munitions and Implements of War (22 CFR 121-128)); the Bureau of Industry and Security, Department of Commerce (15 CFR parts 730-774); the Office of Foreign AssetsControl, Department of Treasury (31 CFR Parts 500+) and the Department of Energy.

NOT GRANTED

No license under 35 U.S.C. 184 has been granted at this time, if the phrase "IF REQUIRED, FOREIGN FILING LICENSE GRANTED" DOES NOT appear on this form. Applicant may still petition for a license under 37 CFR 5.12, if a license is desired before the expiration of 6 months from the filing date of the application. If 6 months has lapsed from the filing date of this application and the licensee has not received any indication of a secrecy order under 35 U.S.C. 181, the licensee may foreign file the application pursuant to 37 CFR 5.15(b).

SelectUSA

The United States represents the largest, most dynamic marketplace in the world and is an unparalleled location for business investment, innovation and commercialization of new technologies. The USA offers tremendous resources and advantages for those who invest and manufacture goods here. Through SelectUSA, our nation works to encourage, facilitate, and accelerate business investment. To learn more about why the USA is the best country in the world to develop technology, manufacture products, and grow your business, visit SelectUSA.gov.

UNITED STATES PATENT AND TRADEMARK OFFICE

Commissioner for Patents
United States Patent and Trademark Office
P.O. Box 1450
Alexandria, VA 22313-1450
www.uspto.gov

The Brevetto Law Group, PLLC
838 Maine Street
Quincy IL 62301

MAILED

SEP 30 2010

OFFICE OF PETITIONS

In re Application of	:	
Jason R. Baumgartner, et al.	:	
Application No. 12/475,494	:	DECISION ON PETITION
Filed: May 30, 2009	:	
Attorney Docket No. AUS920080413..IBM-0146	:	

This is a decision on the petition, filed July 19, 2010, which is being treated as a petition under 37 CFR 1.181 (no fee) requesting, (a) withdrawal of the holding of abandonment in the above-identified application, or (b) alternatively a revival of the above-identified application under the unintentional provisions of 37 CFR 1.137(b).

The petition under 37 CFR 1.181 is **GRANTED**.

This application was held abandoned for failure to reply to the Notice to File Corrected Application Papers mailed June 9, 2009, which set a two (2) month shortened statutory period for reply. A Notice of Abandonment was mailed on February 24, 2010.

Petitioner asserts that the Notice to File Corrected Application Papers dated June 9, 2009 was not received.

A review of the written record indicates no irregularity in the mailing of the Office action, and, in the absence of any irregularity, there is a strong presumption that the Office action was properly mailed to the practitioner at the address of record. This presumption may be overcome by a showing that the Office action was not in fact received.

The showing required to establish nonreceipt of an Office communication must include:

(1) a statement from the practitioner describing the system used for recording an Office action received at the correspondence address of record with the USPTO. The statement should establish that the docketing system is sufficiently reliable. It is expected that the record would include, but not be limited to, the application number, attorney docket number, the mail date of the Office action and the due date for the response.

(2) Practitioner must state that the Office action was not received at the correspondence address of record, and that a search of the practitioner's record(s), including any file jacket or the equivalent, and the application contents, indicates that the Office action was not received.

(3) A copy of the record(s) used by the practitioner where the non-received Office action would have been entered had it been received is required. A copy of the practitioner's record(s) required to show non-receipt of the Office action should include the master docket for the firm. That is, if a three month period for reply was set in the nonreceived Office action, a copy of the master docket report showing all replies docketed for a date three months from the mail date of the nonreceived Office action must be submitted as documentary proof of nonreceipt of the Office action. If no such master docket exists, the practitioner should so state and provide other evidence such as, but not limited to, the following: the application file jacket; incoming mail log; calendar; reminder system; or the individual docket record for the application in question. See MPEP §711.03(c)(I)(A).

The petition satisfies the above-stated requirements. Accordingly, the application was not abandoned in fact.

In regard to Item 3 above, a master docket report was not needed as evidence herein because the file record shows that the Notice to File Corrected Application Papers of June 9, 2009, was returned as undeliverable by the USPS to the Office on June 22, 2009.

In view of the above, the Notice of Abandonment is hereby vacated and the holding of abandonment withdrawn.

In view of the above decision, the petition under 37 CFR 1.137(b) stands DISMISSED AS MOOT.

The file does not indicate a change of address has been submitted, although the address given on the petition differs from the address of record. If appropriate, a change of address should be filed in accordance with MPEP 601.03. A courtesy copy of this decision is being mailed to the address given on the petition; however, the Office will mail all future correspondence solely to the address of record.

Telephone inquiries regarding the decision should be directed to Terri Johnson at (571) 272-2991.

This application is being referred to the Office of Patent Application Processing for appropriate action in due course on the reply submitted with the instant petition.

/ Ramesh Krishnamurthy /
Ramesh Krishnamurthy
Petitions Examiner
Office of Petitions

cc: **The Brevetto Law Group, PLLC**
107 S. West Street, #765
Alexandria, VA 22314

UNITED STATES PATENT AND TRADEMARK OFFICE

Commissioner for Patents
United States Patent and Trademark Office
P.O. Box 1450
Alexandria, VA 22313-1450
www.uspto.gov

LAW OFFICE OF MICHAEL A. SANZO, LLC
15400 CALHOUN DR.
SUITE 125
ROCKVILLE, MD 20855

MAILED
MAR 20 2012
OFFICE OF PETITIONS

In re Application of
Ralph Mcintosh, et al.
Application No. 12/475,517
Filed: May 30, 2009
Attorney Docket No. 7601/20350

DECISION GRANTING PETITION
UNDER 37 CFR 1.313(c)(2)

This is a decision on the petition under 37 CFR 1.313(c)(2), filed March 18, 2012, to withdraw the above-identified application from issue after payment of the issue fee.

The petition is **GRANTED**.

The above-identified application is withdrawn from issue for consideration of a submission under 37 CFR 1.114 (request for continued examination). *See* 37 CFR 1.313(c)(2).

Petitioner is advised that the issue fee paid on February 25, 2012 cannot be refunded. If, however, this application is again allowed, petitioner may request that it be applied towards the issue fee required by the new Notice of Allowance.[1]

Telephone inquiries regarding this decision should be directed to undersigned at (571) 272-1642. All other inquiries concerning the examination or status of this application should be directed to the Technology Center.

This application is being referred to Technology Center AU 1731 for processing of the request for continued examination under 37 CFR 1.114 and for consideration of the concurrently filed information disclosure statement.

/AMW/
April M. Wise
Petitions Examiner
Office of Petitions

[1] *The request to apply the issue fee to the new Notice may be satisfied by completing and returning the new Part B – Fee(s) Transmittal Form (along with any balance due at the time of submission). Petitioner is advised that the Issue Fee Transmittal Form* ***must*** *be completed and timely submitted to avoid abandonment of the application.*

UNITED STATES PATENT AND TRADEMARK OFFICE

Commissioner for Patents
United States Patent and Trademark Office
P.O. Box 1450

MAILED
SEP 22 2011
OFFICE OF PETITIONS

The Caldwell Firm, LLC
P.O. Box 59655
Dallas TX 75229

In re Application of	:	
Bennett GRAYSON	:	ON PETITION
Application No. 12/475,599	:	
Filed: May 31, 2009	:	
Atty. Docket No.: 118.09004	:	

This is a decision on the petition under 37 CFR 1.137(b), filed September 12, 2011, to revive the above-identified application.

The petition is **GRANTED**.

The application became abandoned for failure to reply in a timely manner to the Requirement for Restriction/Election mailed December 7, 2010 (Restriction Requirement), which set a shortened period for reply of one (1) month. No extension of time under the provisions of 37 CFR 1.137(b) was obtained. The application became abandoned January 8, 2011. A Notice of Abandonment was mailed July 11, 2011.

The petition satisfies the conditions for revival pursuant to 37 CFR 1.137(b) by including (1) a reply in the form of a Response to the Restriction Requirement mailed December 7, 2010, (2) a petition fee of $810, and (3) a statement of unintentional delay. The reply to the Restriction Requirement is accepted as having been unintentionally delayed.

37 CFR 1.137(b)(3) requires a statement that the entire delay in filing the required reply from the due date for the reply until the filing of a grantable petition pursuant to 37 CFR 1.137(b) was unintentional. If the statement contained in the instant petition varies from the language required by 37 CFR 1.137(b)(3), the statement contained in the instant petition is being construed as the statement required by 37 CFR 1.137(b)(3) and petitioner must notify the Office if this is **not** a correct interpretation of the statement contained in the instant petition.

Telephone inquiries relating to this decision should be directed to Robert DeWitty, Petitions Attorney, Office of Petitions (571-272-8427).

Application No. 12/475,599

The application will be referred to Technology Center Art Unit 3632 for consideration of the filed Response.

Anthony Knight
Director
Office of Petitions

UNITED STATES PATENT AND TRADEMARK OFFICE

Commissioner for Patents
United States Patent and Trademark Office
P.O. Box 1450
Alexandria, VA 22313-1450
www.uspto.gov

SEP 30 2010

DRINKER BIDDLE & REATH (DC)
1500 K STREET, N.W.
SUITE 1100
WASHINGTON DC 20005-1209

In re application of
Arimatsu et al.
Application No. 12/475,622
Filed: June 1, 2009
For: OBJECT PICKING DEVICE

: **DECISION ON REQUEST TO PARTICIPATE IN PATENT PROSECUTION HIGHWAY PROGRAM AND PETITION TO MAKE SPECIAL UNDER 37 CFR 1.102(d)**

This is a decision on the request to participate in the Patent Prosecution Highway (PPH) program and the petition under 37 CFR 1.102(d), filed August 12, 2010, to make the above-identified application special.

The request and petition are **GRANTED**.

A grantable request to participate in the PPH program and petition to make special require:

(1) The U.S. application must validly claim priority under 35 U.S.C. 119(a) to one or more applications filed in the JPO;
(2) Applicant must submit a copy of the allowable/patentable claim(s) from the JPO application(s) along with an English translation thereof and a statement that the English translation is accurate;
(3) All the claims in the U.S. application must sufficiently correspond or be amended to sufficiently correspond to the allowable/patentable claim(s) in the JPO application(s);
(4) Examination of the U.S. application has not begun;
(5) Applicant must submit a copy of the latest Office action from each of the JPO application(s) containing the allowable/patentable claim(s) along with an English translation thereof and a statement that the English translation is accurate;
(6) Applicant must submit an IDS listing the documents cited by the JPO examiner in the JPO Office action along with copies of documents except U.S. patents or U.S. patent application publications.

In light of the preliminary amendment filed August 12, 2010. The request to participate in the PPH pilot program complies with the above requirements. Therefore, the above-identified application has been accorded "special" status.

All other inquiries concerning the examination or status of the application should be directed to the Patent Application Information Retrieval (PAIR) system.

The application is being forwarded to the examiner for action on the merits commensurate with this decision.

Any inquiry regarding this decision should be directed to Mikado Buiz, Quality Assurance Specialist, at (571) 272-6578.

/ Mikado Buiz /

Mikado Buiz,
Quality Assurance Specialist
Technology Center 3600

BM/BM: 09/29/10

UNITED STATES PATENT AND TRADEMARK OFFICE

Commissioner for Patents
United States Patent and Trademark Office
P.O. Box 1450
Alexandria, VA 22313-1450
www.uspto.gov

MATTINGLY & MALUR, PC
1800 DIAGONAL ROAD
SUITE 370
ALEXANDRIA, VA 22314

MAILED

AUG 31 2011

OFFICE OF PETITIONS

In re Application of
Thomas G. Ennis
Application No. 12/475,635
Filed: June 1, 2009
Attorney Docket No.: NSC-7072

ON PETITION

This is a decision on the petition, filed August 10, 2011, to revive the above-identified application under the provisions of 37 CFR 1.137(b).

The petition is **GRANTED**.

This application became abandoned for failure to submit corrected formal drawings on or before July 21, 2011, as required by the Notice of Allowability mailed April 21, 2011. A Notice of Abandonment was mailed on August 4, 2011. In response, on August 10, 2011, the present petition was filed.

The petition satisfies the requirements of 37 CFR 1.137(b) in that petitioner has supplied (1) the reply in the form of corrected formal drawings, (2) the petition fee of $810; and (3) an adequate statement of unintentional delay.

The application is being referred to the Office of Data Management to oversee the review of the drawing filed August 10, 2011 and for processing into a patent.

Telephone inquires related to this decision may be directed to the undersigned at (571) 272-3204. Telephone inquiries related to processing as a patent should be directed to (571) 272-4200

/SDB/

Sherry D. Brinkley
Petitions Examiner
Office of Petitions

UNITED STATES PATENT AND TRADEMARK OFFICE

Commissioner for Patents
United States Patent and Trademark Office
P.O. Box 1450
Alexandria, VA 22313-1450
www.uspto.gov

MORRIS MANNING MARTIN LLP
3343 PEACHTREE ROAD, NE
1600 ATLANTA FINANCIAL CENTER
ATLANTA GA 30326

MAILED
JUL 29 2011
OFFICE OF PETITIONS

In re Application of	:
Phillips	: DECISION ON PETITION
Application No. 12/475,662	:
Filed: June 1, 2009	:
Atty. Dkt. No.: 1020-001	:

This is a decision on the petition to withdraw the holding of abandonment under 37 CFR 1.181, filed June 13, 2011.

The Notice of Abandonment mailed May 27, 2011 indicates that the application is abandoned for failure to timely submit a proper reply to the Office action mailed October 8, 2010.

Petitioner attributes the holding of abandonment to the mailing of the non-final Office action to an incorrect correspondence address.

The petition and supporting documents have been carefully reviewed and found persuasive. The correspondence address and power of attorney have been restored to the correct customer number..

In view of the evidence presented, the petition to withdraw the holding of abandonment is hereby GRANTED.

The Notice of Abandonment is hereby VACATED and the holding of abandonment is WITHDRAWN.

The application file is being forwarded to Technology Center 1627 for the re-mailing of the non-final Office action under separate cover. The newly mailed non-final Office will set a new period of time for reply.

Telephone inquiries concerning this matter may be directed to the undersigned at (571) 272-3205.

/ALESIA M. BROWN/

Alesia M. Brown
Attorney Advisor
Office of Petitions

UNITED STATES PATENT AND TRADEMARK OFFICE

Commissioner for Patents
United States Patent and Trademark Office
P.O. Box 1450
Alexandria, VA 22313-1450
www.uspto.gov

KOHN & ASSOCIATES, PLLC
30500 NORTHWESTERN HWY, SUITE 410
FARMINGTON HILLS MI 48334

MAILED
MAR 21 2011
OFFICE OF PETITIONS

In re Application of	:	
Niklasson, et al.	:	
Application No. 12/475,704	:	DECISION
Filed/Deposited: 1 June, 2009	:	
Attorney Docket No. 3174.00033	:	

This is a decision on the petition filed 14 July, 2010, seeking to have accorded a filing date of 1 June, 2009, for the above-identified application based upon a showing that the omitted specification and drawing/figures were present in the prior-filed co-pending nonprovisional application to which this application claimed benefit (under 37 C.F.R. §1.78) on deposit.

The petition is **GRANTED**.

The instant application was deposited on 1 June, 2009. There was with the application only a preliminary amendment cancelling claims and adding a claim—no specification was filed.

On 4 August, 2009, the Office of Patent Application Processing (OPAP) mailed a Notice of Incomplete Nonprovisional Application, stating that the application had not been accorded a filing date because it had been deposited without a specification as required pursuant to 35 U.S.C. §112. The Office indicated that Petitioner could demonstrate on petition the presence of the specification by presentation of evidence of deposit (e.g., date-stamped receipt card, EFS Acknowledgement Receipt); or submit the specification and accept the date of submission as the filing date. The Office gave Petitioner two (2) months within which to reply.

On 4 September, 2009, Petitioner again filed, *inter alia*, a one-page preliminary amendment, an amendment seeking entry of drawings, and four sheets of replacement drawings—again, no specification was filed.

On 30 September, 2009, Petitioner filed, *inter alia*, 46 pages of specification (41 pages of description, 5 pages of claims, no abstract, and no drawings).

On 14 October, 2009, the Office mailed a Notice to File Corrected Application Papers (abstract), and included therein a Notice of Omitted Items (drawing/figures 1-4, 5b-d, 6, described in the

specification). The Office gave Petitioner a period of two months to reply and indicated that Petitioner might, *inter alia*, evidence through a date-stamped receipt card or Electronic Acknowledgement Receipt the presence of the omitted items on deposit, or might accept the application as filed, or might submit the omitted items and accept the date of submission as the date of filing.

On 2 November, 2009, Petitioner filed, *inter alia*, a petition pursuant to 37 C.F.R. §1.57 seeking a filing date "as of the original date of deposit of the application papers"—however, given the history set forth above, the meaning of Petitioner's request was unclear. Moreover, in light of the several amendments filed herein, Petitioner did not seem to have complied with the requirements of the regulations at 37 C.F.R. §1.57(a)(1)(iii)—and the petition was dismissed on 10 June, 2010.

On 14 July, 2010, Petitioner re-advanced her petition pursuant to 37 C.F.R. §1.57 seeking a filing date of 1 June, 2009, utilizing the specification (submitted 30 September, 2009) of Application No. 10/487,134 (filed on 12 August 2004), and which issued as Patent No. 7,560,609 on 14 July, 2009.

Consideration turns to the merits of the §1.57 petition.

The regulations at 37 C.F.R. §1.57 provide that:

> (a) Subject to the conditions and requirements of this paragraph, if all or a portion of the specification or drawing(s) is inadvertently omitted from an application, but the application contains a claim under §1.55 for priority of a prior-filed foreign application, or a claim under §1.78 for the benefit of a prior-filed provisional, nonprovisional, or international application, that was present on the filing date of the application, and the inadvertently omitted portion of the specification or drawing(s) is completely contained in the prior-filed application, the claim under §1.55 or §1.78 shall also be considered an incorporation by reference of the prior-filed application as to the inadvertently omitted portion of the specification or drawing(s).
>
> > (1) The application must be amended to include the inadvertently omitted portion of the specification or drawing(s) within any time period set by the Office, but in no case later than the close of prosecution as defined by §1.114(b), or abandonment of the application, whichever occurs earlier. The applicant is also required to:
> >
> > (i) Supply a copy of the prior-filed application, except where the prior-filed application is an application filed under 35 U.S.C. §111;
> >
> > (ii) Supply an English language translation of any prior-filed application that is in a language other than English; and
> >
> > (iii) Identify where the inadvertently omitted portion of the specification or drawings can be found in the prior-filed application.

***

> (3) If an application is not otherwise entitled to a filing date under §1.53(b), the amendment must be by way of a petition pursuant to this paragraph accompanied by the fee set forth in §1.17(f).

The instant application was filed after September 21, 2004, and thus, the provisions of 37 C.F.R. §1.57(a) are applicable.

ANALYSIS

Petitioner filed a petition on 14 July, 2010, with: fee, (and previously) a copy of Application No. Application No. 10/487,134 (filed on 12 August 2004, and which issued as Patent No. 7,560,609 on 14 July, 2009), to which priority was claimed on deposit and drawings on 4 September, 2009, and Petitioner identified where the inadvertently omitted materials can be filed in the prior-filed application. A preliminary amendment to add the inadvertently omitted material is required and appears to have been submitted contemporaneously with the petition.

CONCLUSION

Accordingly, the petition is **granted**.

This application is being forwarded to the Office of Patent Application Processing (OPAP) formerly Office of Initial Patent Examination (OIPE), for further processing, with the filing date of 1 June, 2009, using the application papers present on that date, and drawings/figure and preliminary amendment submitted on 4 September, 2009, and the specification submitted on 30 September, 2009.

Any questions concerning this matter may be directed to John Gillon at (571) 272-3214.

All other inquiries concerning either the examination procedures or status of the application should be directed to the Technology Center.

Chris Bottorf
Supervisory Petitions Examiner
Office of Petitions

UNITED STATES PATENT AND TRADEMARK OFFICE

Commissioner for Patents
United States Patent and Trademark Office
P.O. Box 1450
Alexandria, VA 22313-1450
www.uspto.gov

Arent Fox/VALE INCO
1050 Connecticut Ave., N.W.
Suite 400
Washington DC 20036

MAILED

JAN 20 2011

OFFICE OF PETITIONS

In re Application of	:	
Antonio Clareti Pereira et al.	:	
Application No. 12/475,727	:	DECISION ON PETITION
Filed: June 1, 2009	:	
Attorney Docket No. 024031-00066	:	

This is a decision on the petition under the unintentional provisions of 37 CFR 1.137(b), filed December 30, 2010, to revive the above-identified application.

The petition is **GRANTED**.

The application became abandoned for failure to reply in a timely manner to the Notice to File Missing Parts of Non-Provisional Application (Notice), mailed July 16, 2009. The Notice set a period for reply of two (2) months from the mail date of the Notice. No extensions of time under the provisions of 37 CFR 1.136(a) was obtained. Accordingly, the application became abandoned on September 17, 2009. A Notice of Abandonment was mailed June 16, 2009.

The petition satisfies the requirements of 37 CFR 1.137(b) in that petitioner has supplied (1) the reply in the form of an oath and declaration and surcharge fee of $130 (2) the petition fee of $1,620, and (3) a proper statement of unintentional delay. Accordingly the oath and declaration and fee are accepted as being unintentionally delayed.

Telephone inquiries regarding this decision should be directed to the Kimberly Inabinet at (571) 272-4618.

This application is being referred to the Office of Patent Application Processing for appropriate action in the normal course of business on the reply received December 30, 2010. Inquires regarding the status of the application should be directed to 571-272-4000.

/Kimberly Inabinet/

Kimberly Inabinet
Petitions Examiner
Office of Petitions

UNITED STATES PATENT AND TRADEMARK OFFICE

Commissioner for Patents
United States Patent and Trademark Office
P.O. Box 1450
Alexandria, VA 22313-1450
www.uspto.gov

MAILED

SEP 22 2010

OFFICE OF PETITIONS

DANIEL V. THOMPSON
THE LAW OFFICES OF DANIEL V. THOMPSON P.C.
9304 FOREST LANE,
SUITE N253
DALLAS TX 75243

In re Application of Timothy Scott Saunders Application No. 12/475,732 Filed: June 1, 2009 Attorney Docket No. B-6151	: : : : :	DECISION ON PETITION TO WITHDRAW FROM RECORD

This is a decision on the Request to Withdraw as attorney or agent of record under 37 C.F.R. § 1.36(b), filed August 2, 2010, and supplemented on August 6, 2010.

The request is **APPROVED**.

A grantable request to withdraw as attorney/agent of record must be signed by every attorney/agent seeking to withdraw or contain a clear indication that one attorney is signing on behalf of another/others. The Office will require the practitioner(s) to certify that he, she or they have: (1) given reasonable notice to the client, prior to the expiration of the reply period, which the practitioner(s) intends to withdraw from employment; (2) delivered to the client or a duly authorized representative of the client all papers and property (including funds) to which the client is entitled; and (3) notified the client of any replies that may be due and the time frame within which the client must respond, pursuant to 37 CFR 10.40 (c).

The request was signed by Daniel V. Thompson, on behalf of the practitioners of record associated with Customer No 23636.

Customer No 23636 has been withdrawn as from record. Applicant is reminded that there is no attorney of record at this time.

The correspondence address of record has been changed and the new correspondence address is the address indicated below.

The application is currently abandoned for failure to respond the Office action mailed February 25, 2010.

Telephone inquires concerning this decision should be directed to the undersigned at (571) 272-6059. All other inquires concerning either the examination or status of the application should be directed to the Technology Center.

A. Kelley

Alicia Kelley
Petitions Examiner
Office of Petitions

cc: TIMOTHY SCOTT SAUNDERS
P.O. BOX 827
UTOPIA, TX 78884

UNITED STATES PATENT AND TRADEMARK OFFICE

UNITED STATES DEPARTMENT OF COMMERCE
United States Patent and Trademark Office
Address: COMMISSIONER FOR PATENTS
P.O. Box 1450
Alexandria, Virginia 22313-1450
www.uspto.gov

APPLICATION NUMBER	FILING OR 371(C) DATE	FIRST NAMED APPLICANT	ATTY. DOCKET NO./TITLE
12/475,732	06/01/2009	Timothy Scott Saunders	B-6151

CONFIRMATION NO. 4066

POWER OF ATTORNEY NOTICE

23636
Daniel V. Thompson
The Law Offices Of Daniel V. Thompson P.C.
9304 Forest Lane,
Suite N253
Dallas, TX 75243

OC000000043640213

Date Mailed: 09/22/2010

NOTICE REGARDING CHANGE OF POWER OF ATTORNEY

This is in response to the Power of Attorney filed 08/06/2010.

- The withdrawal as attorney in this application has been accepted. Future correspondence will be mailed to the new address of record. 37 CFR 1.33.

/atkelley/

Office of Data Management, Application Assistance Unit (571) 272-4000, or (571) 272-4200, or 1-888-786-0101

UNITED STATES PATENT AND TRADEMARK OFFICE

Commissioner for Patents
United States Patent and Trademark Office
P.O. Box 1450
Alexandria, VA 22313-1450

WINSTEAD PC
P.O. BOX 50784
DALLAS, TX 75201

MAILED

MAR 24 2011

OFFICE OF PETITIONS

Applicant: Davis, et al.
Appl. No.: 12/475,734
Filing Date: June 1, 2009
Title: CARBON NANOTUBE FIBER-REINFORCED POLYMER COMPOSITES HAVING IMPROVED FATIGUE DURABILITY AND METHODS FOR PRODUCTION THEREOF
Attorney Docket No.: 13260-P020US
Pub. No.: US 2010/0098931 A1
Pub. Date: April 22, 2010

This is a decision on the request for a corrected patent application publication under 37 CFR 1.221(b), received on June 21 2010, for the above-identified application.

The request is granted.

The corrected patent application publication will be published in due course, unless the patent issues before the application is republished.

It would greatly benefit the Office if **applicant did not provide copies of papers**, which were previously submitted and/or **a complete copy of the pre-grant publication**, as it unnecessarily increases the cost to the Office. See 37 CFR 1.4(b). A request for corrected publication need only point out what was printed incorrectly in the application, where the error occurs in the publication and where the correct text or drawing is found in the application papers. Marked up relevant copies of the applications papers and the pre-grant publication may facilitate processing of the request, where it is not readily apparent where the error occurs. If it is not clear why the error is a material error, further explanation may be warranted.

Inquiries relating to this matter may be directed to Mark Polutta at (571) 272-7709.

M. O. Pat

Mark Polutta
Senior Legal Advisor
Office of Patent Legal Administration
Office of the Deputy Commissioner
for Patent Examination Policy

UNITED STATES PATENT AND TRADEMARK OFFICE

Commissioner for Patents
United States Patent and Trademark Office
P.O. Box 1450
Alexandria, VA 22313-1450
www.uspto.gov

COOLEY LLP
ATTN: Patent Group
Suite 1100
777 - 6th Street, NW
WASHINGTON DC 20001

MAILED

JAN 12 2012

OFFICE OF PETITIONS

In re Application of
Douglas J. Hurst
Application No. 12/475,746
Filed: June 1, 2009
Attorney Docket No. **MOCA-004/01US**
308712-2013

DECISION ON PETITION
TO WITHDRAW
FROM RECORD

This is a decision on the request to withdraw as attorney of record under 37 CFR § 1.36(b), filed December 6, 2011.

The request is **APPROVED**.

A grantable request to withdraw as attorney/agent of record must be signed by every attorney/agent seeking to withdraw or contain a clear indication that one attorney is signing on behalf of another/others. The Office requires the practitioner(s) requesting withdrawal to certify that he, she, or they have: (1) given reasonable notice to the client, prior to the expiration of the response period, that the practitioner(s) intends to withdraw from employment; (2) delivered to the client or a duly authorized representative of the client all papers and property (including funds) to which the client is entitled; and (3) notified the client of any responses that may be due and the time frame within which the client must respond , pursuant to 37 CFR 10.40.

The request was signed by Thomas M. Croft on behalf of all attorneys of record who are associated with Customer Number 58249.

All attorneys/agents associated with Customer Number 58249 have been withdrawn.

Applicant is reminded that there is no attorney of record at this time.

The correspondence address of record has been changed and all future correspondence will be directed to the assignee of the entire interest at the address indicated below.

There is no outstanding Office action mailed that requires a reply from the applicant.

Telephone inquiries concerning this decision should be directed to the undersigned at 571-272-4584.

/JoAnne Burke/
JoAnne Burke
Petitions Examiner
Office of Petitions

cc: Mocapay, Inc.
1601 Pearl Street
Suite 200
Boulder, CO 80302

UNITED STATES PATENT AND TRADEMARK OFFICE

UNITED STATES DEPARTMENT OF COMMERCE
United States Patent and Trademark Office
Address: COMMISSIONER FOR PATENTS
P.O. Box 1450
Alexandria, Virginia 22313-1450
www.uspto.gov

APPLICATION NUMBER	FILING OR 371(C) DATE	FIRST NAMED APPLICANT	ATTY. DOCKET NO./TITLE
12/475,746	06/01/2009	Douglas J. Hurst	MOCA-004/01US 308712-2013

CONFIRMATION NO. 4096

POWER OF ATTORNEY NOTICE

OC000000051778874

58249
COOLEY LLP
ATTN: Patent Group
Suite 1100
777 - 6th Street, NW
WASHINGTON, DC 20001

Date Mailed: 01/03/2012

NOTICE REGARDING CHANGE OF POWER OF ATTORNEY

This is in response to the Power of Attorney filed 12/06/2011.

- The withdrawal as attorney in this application has been accepted. Future correspondence will be mailed to the new address of record. 37 CFR 1.33.

/jlburke/

Office of Data Management, Application Assistance Unit (571) 272-4000, or (571) 272-4200, or 1-888-786-0101

UNITED STATES PATENT AND TRADEMARK OFFICE

UNITED STATES DEPARTMENT OF COMMERCE
United States Patent and Trademark Office
Address: COMMISSIONER FOR PATENTS
P.O. Box 1450
Alexandria, Virginia 22313-1450
www.uspto.gov

APPLICATION NO.	FILING DATE	FIRST NAMED INVENTOR	ATTORNEY DOCKET NO.	CONFIRMATION NO.
12/475,765	06/01/2009	Zaher Andraus	6850.00002	4135

7590 11/09/2010
CHRISTOPHER P. MAIORANA, P.C.
24840 HARPER SUITE 100
ST. CLAIR SHORES, MI 48080

EXAMINER
GREENE, JOSEPH L

ART UNIT	PAPER NUMBER
2452	

MAIL DATE	DELIVERY MODE
11/09/2010	PAPER

DECISION DISMISSING PETITION UNDER 37 CFR 1.138(c)

The declaration of express abandonment will not be recognized

This is in response to the petition under 37 CFR 1.138(c), for express abandonment to avoid publication of the above-identified application.

The petition is dismissed.

The express abandonment will **not** be recognized for the reason(s) indicated below:

1. ☑ The petition under 37 CFR 1.138(c) was not filed in sufficient time to permit the appropriate officials to recognize the abandonment and remove the application from the publication process.
2. ☐ The petition was not signed by a party authorized by 37 CFR 1.33(b)(1), (3) or (4).
3. ☐ The Application was published in compliance with 35 U.S.C. 122(b), and it is available on the USPTO web site at http://www.uspto.gov/patft/index.html.
4. ☐ Petition fee was not paid.

The application **has/will be published** as scheduled.

Telephone inquiries should be directed to the Office of Data Management at (571) 272-4200.

Nomi Farmer

Patent Publication Branch
Office of Data Management

FORM PET650D (Rev. 08/07)

UNITED STATES PATENT AND TRADEMARK OFFICE

Commissioner for Patents
United States Patent and Trademark Office
P.O. Box 1450
Alexandria, VA 22313-1450
www.uspto.gov

Groover & Associates PLLC
Box 293748
Lewisville TX 75029

MAILED
APR 07 2011
OFFICE OF PETITIONS

In re Application of	:	
Ford Oxaal	:	
Application No. 12/475,771	:	DECISION ON PETITION
Filed: June 1, 2009	:	
Attorney Docket No. GRND-24D	:	

This is a decision on the petition under the unintentional provisions of 37 CFR 1.137(b), filed January 20, 2011, to revive the above-identified application.

The petition is **DISMISSED.**

Any request for reconsideration of this decision must be submitted within TWO (2) MONTHS from the mail date of this decision. Extensions of time under 37 CFR 1.136(a) are permitted. The reconsideration request should include a cover letter entitled "Renewed Petition under 37 CFR 1.137(b)." This is **not** a final agency action within the meaning of 5 U.S.C. § 704.

The application became abandoned for failure to reply in a timely manner to the non-final Office action mailed June 15, 2010, which set a shortened statutory period for reply of three (3) months. No extensions of time under the provisions of 37 CFR 1.136(a) were obtained. Accordingly, the application became abandoned on September 16, 2010. A Notice of Abandonment was mailed on January 10, 2011.

A grantable petition under 37 CFR 1.137(b) must be accompanied by: (1) the required reply, unless previously filed; (2) the petition fee as set forth in 37 CFR 1.17(m); (3) a statement that the entire delay in filing the required reply from the due date for the reply until the filing of a grantable petition pursuant to 37 CFR 1.137(b) was unintentional; and (4) any terminal disclaimer (and fee as set forth in 37 CFR 1.20(d)) required by 37 CFR 1.137(d). Where there is a question as to whether either the abandonment or the delay in filing a petition under 37 CFR 1.137 was unintentional, the Director may require additional information. See MPEP 711.03(c)(II)(C) and (D). The instant petition lacks item (2).

As to item (2) it appears that the petition fee of $810, as required under 37 CFR 1.137(b) was not paid.

Further correspondence with respect to this matter should be addressed as follows:

By Mail: Mail Stop PETITION
Commissioner for Patents
P. O. Box 1450
Alexandria, VA 22313-1450

By hand: U. S. Patent and Trademark Office
Customer Service Window, Mail Stop Petitions
Randolph Building
401 Dulany Street
Alexandria, VA 22314

The centralized facsimile number is **(571) 273-8300.**

Telephone inquiries concerning this decision should be directed to Kimberly Inabinet at (571) 272-4618.

/Kimberly Inabinet/

Kimberly Inabinet
Petitions Examiner
Office of Petitions

UNITED STATES PATENT AND TRADEMARK OFFICE

Commissioner for Patents
United States Patent and Trademark Office
P.O. Box 1450
Alexandria, VA 22313-1450
www.uspto.gov

Groover & Associates PLLC
Box 293748
Lewisville TX 75029

MAILED
MAY 20 2011
OFFICE OF PETITIONS

In re Application of	:	
Ford Oxaal	:	
Application No. 12/475,771	:	DECISION ON PETITION
Filed: June 1, 2009	:	
Attorney Docket No. GRND-24D	:	

This is a decision on the renewed petition under the unintentional provisions of 37 CFR 1.137(b), filed April 21, 2011, to revive the above-identified application.

The petition is **GRANTED**.

The application became abandoned for failure to reply in a timely manner to the non-final Office action mailed June 15, 2010, which set a shortened statutory period for reply of three (3) months. No extensions of time under the provisions of 37 CFR 1.136(a) were obtained. Accordingly, the application became abandoned on September 16, 2010. A Notice of Abandonment was mailed on January 10, 2011.

The petition satisfies the requirements of 37 CFR 1.137(b) in that petitioner has supplied (1) the reply in the form of an amendment, (2) the petition fee of $810 and (3) a proper statement of unintentional delay. Accordingly, the amendment is accepted as being unintentionally delayed.

Telephone inquiries concerning this decision should be directed to Kimberly Inabinet at (571) 272-4618.

This application is being referred to Technology Center AU 3765 for appropriate action by the Examiner in the normal course of business on the reply received January 20, 2011.

/Kimberly Inabinet/

Kimberly Inabinet
Petitions Examiner
Office of Petitions

Doc Code: PET.AUTO Document Description: Petition automatically granted by EFS-Web	PTO/SB/64 U.S. Patent and Trademark Office Department of Commerce

Electronic Petition Request	**PETITION FOR REVIVAL OF AN APPLICATION FOR PATENT ABANDONED UNINTENTIONALLY UNDER 37 CFR 1.137(b)**
Application Number	12475792
Filing Date	01-Jun-2009
First Named Inventor	Franklin Lacy
Attorney Docket Number	203-7
Title	BULKHEAD ANCHORING SYSTEM FOR WATERWAYS

The above-identified application became abandoned for failure to file a timely and proper reply to a notice or action by the United States Patent and Trademark Office. The date of abandonment is the day after the expiration date of the period set for reply in the office notice or action plus any extensions of time actually obtained.

APPLICANT HEREBY PETITIONS FOR REVIVAL OF THIS APPLICATION

NOTE: A grantable petition requires the following items:
(1) Petition fee;
(2) Reply and/or issue fee;
(3) Terminal disclaimer with disclaimer fee - required for all utility and plant applications filed before June 8, 1995; and for all design applications; and
(4) Statement that the entire delay was unintentional

Petition Fee

- ○ Applicant claims SMALL ENTITY status. See 37 CFR 1.27.
- ○ Applicant is no longer claiming SMALL ENTITY status. See 37 CFR 1.27(g)(2).
- ◉ Applicant(s) status remains as SMALL ENTITY.
- ○ Applicant(s) status remains as other than SMALL ENTITY.

2. Reply and/or fee

- ◉ I certify, in accordance with 37 CFR 1.4(d)(4) that the amendment and response have already been filed in the above-identified application on 12-30-2011
- ○ Amendment and response are attached

RCE request,submission, and fee.

- ○ I certify, in accordance with 37 CFR 1.4(d)(4) that the RCE Request, Submission, and Fee have already been filed in the above-identified application on
- ○ RCE Request, Submission, and Fee are attached

Notice of Appeal

○ I certify, in accordance with 37 CFR 1.4(d)(4) that the Notice of Appeal and Fee have already been filed in the above-identified application on

○ Notice of Appeal and Fee are attached

3. Terminal Disclaimer is not required, since the Electronic Petition format is not support for Design applications and applications filed before June 8, 1995. Please file using regular petition format for review by the Office of Petitions.

☒ STATEMENT: The entire delay in filing the required reply from the due date for the required reply until the filing of a grantable petition under 37 CFR 1.137(b) was unintentional.

THIS PORTION MUST BE COMPLETED BY THE SIGNATORY OR SIGNATORIES

I certify, in accordance with 37 CFR 1.4(d)(4) that I am:

◉ An attorney or agent registered to practice before the Patent and Trademark Office who has been given power of attorney in this application.

○ An attorney or agent registered to practice before the Patent and Trademark Office, acting in a representative capacity.

○ A sole inventor

○ A joint inventor; I certify that I am authorized to sign this submission on behalf of all of the inventors

○ A joint inventor; all of whom are signing this e-petition

○ The assignee of record of the entire interest that has properly made itself of record pursuant to 37 CFR 3.71

Signature	/Clark A. Puntigam/
Name	Clark A. Puntigam
Registration Number	25763

UNITED STATES PATENT AND TRADEMARK OFFICE

Commissioner for Patents
United States Patent and Trademark Office
P.O. Box 1450
Alexandria, VA 22313-1450
www.uspto.gov

Decision Date December 30, 2011

In re Application of Franklin Lacy

Application No. 12475792

Filed: 01-Jun-2009

Attorney Docket No. 203-7

DECISION ON PETITION

UNDER CFR 1.137(b)

This is an electronic decision on the petition under 37 CFR 1.137(b), December 30, 2011 , to revive the above-identified application.

The petition is **GRANTED**.

The above-identified application became abandoned for failure to reply in a timely manner to the outstanding Office communication. The date of abandonment is the day after the last day of the period set for reply in the Office action plus any applicable extensions of time properly requested.

The electronic petition satisfies the conditions for revival pursuant to the provisions of 37 CFR 1.137(b) in that (1) the reply in the form of aresponse; (2) the petition fee as set forth in 37 CFR 1.17 (m); and (3) the required statement of unintentional delay have been received. Accordingly, the response is accepted as having been unintentionally delayed.

Telephone inquiries concerning this decision should be directed to the Patent Electronic Business Center (EBC) at 866-217-9197.

This application file is being directed to the Technology Center.

Office of Petitions

UNITED STATES PATENT AND TRADEMARK OFFICE

UNITED STATES DEPARTMENT OF COMMERCE
United States Patent and Trademark Office
Address: COMMISSIONER FOR PATENTS
P.O. Box 1450
Alexandria, Virginia 22313-1450
www.uspto.gov

APPLICATION NO.	FILING DATE	FIRST NAMED INVENTOR	ATTORNEY DOCKET NO.	CONFIRMATION NO.
12/475,817	06/01/2009	MASAO TESHIMA	09346/LH	4228

7590 01/25/2011
HOLTZ, HOLTZ, GOODMAN & CHICK PC
220 Fifth Avenue
16TH Floor
NEW YORK, NY 10001-7708

EXAMINER
OWENS, DOUGLAS W

ART UNIT	PAPER NUMBER
2821	

MAIL DATE	DELIVERY MODE
01/25/2011	PAPER

DECISION GRANTING PETITION UNDER 37 CFR 1.138(d)

The declaration of express abandonment is recognized

This is in response to the petition under 37 CFR 1.138(d), requesting for a refund of any previously paid search fee and excess claims fee in the above-identified application.

The petition is granted.

The express abandonment is recognized. Any previously paid search fee and excess claims fee are hereby refunded.

Telephone inquiries should be directed to the Office of Data Management at (571) 272-4200.

Betty Powell

Patent Publication Branch
Office of Data Management

FORM PET651G (Rev. 08/07)

Doc Code: PET.GREEN
Document Description: Petition for Green Tech Pilot

PTO/SB/420 (12-09)
Approved for use through 05/31/2010. OMB 0651-0062
U.S. Patent and Trademark Office; U. S. DEPARTMENT OF COMMERCE
Under the Paperwork Reduction Act of 1995, no persons are required to respond to a collection of information unless it displays a valid OMB control number.

PETITION TO MAKE SPECIAL UNDER THE GREEN TECHNOLOGY PILOT PROGRAM

Attorney Docket Number: GTC-P0011	Application Number (if known): 12/475,822	Filing date: June 1, 2009

First Named Inventor: Rickwood, Martin

Title: METHOD OF LASER-WELDING USING THERMAL TRANSFER DEPOSITION OF A LASER-ABSORBING DYE

APPLICANT HEREBY REQUESTS TO PARTICIPATE IN THE GREEN TECHNOLOGY PILOT PROGRAM FOR THE ABOVE-IDENTIFIED APPLICATION. See Instruction Sheet on page 2.

This petition must be timely filed electronically using the USPTO electronic filing system, EFS-Web.

1. By filing this petition:

   Applicant is requesting early publication: Applicant hereby requests early publication under 37 CFR 1.219 and the publication fee set forth in 37 CFR 1.18(d) accompanies this request. Applicant hereby rescinds under 37 CFR 1.213(b) any previous filed request that the above-identified application not be published under 35 U.S.C. 122(b).

   If the application has been published, the petition must still be accompanied by the publication fee set forth in 37 CFR 1.18(d) and a statement that the application has been published.

2. By filing this petition: applicant is agreeing to make an election without traverse in a telephonic interview and elect an invention that meets the eligibility requirement and classification requirement set forth in the notice entitled "Pilot Program for Green Technologies Including Greenhouse Gas Reduction" that was published in the Federal Register if the Office determines that the claims are not obviously directed to a single invention.

3. This request is accompanied by statements of special status for the eligibility requirement.

4. The application contains no more than three (3) independent claims and twenty (20) total claims.

5. The application does not contain any multiple dependent claims.

6. Other attachments: N/A

Signature /Damon A. Neagle/	Date September 2, 2011
Name (Print/Typed) Damon A. Neagle	Registration Number 44,964

***Note**: Signatures of all the inventors or assignees of record of the entire interest or their representative(s) are required in accordance with 37 CFR 1.33 and 11.18. Please see 37 CFR 1.4(d) for the form of the signature. If necessary, submit multiple forms for more than one signature, see below*.*

☒ *Total of one forms are submitted.

The information is required to obtain or retain a benefit by the public which is to file (and by the USPTO to process) an application. Confidentiality is governed by 35 U.S.C. 122 and 37 CFR 1.11 and 1.14. This collection is estimated to take 12 hours to complete, including gathering, preparing, and submitting the completed application form to the USPTO. Time will vary depending upon the individual case. Any comments on the amount of time you require to complete this form and/or suggestions for reducing this burden, should be sent to the Chief Information Officer, U.S. Patent and Trademark Office, U.S. Department of Commerce, P.O. Box 1450, Alexandria, VA 22313-1450. DO NOT SEND FEES OR COMPLETED FORMS TO THIS ADDRESS. **SEND TO: Commissioner for Patents, P.O. Box 1450, Alexandria, VA 22313-1450.**

If you need assistance in completing the form, call 1-800-PTO-9199 and select option 2.

Under the Paperwork Reduction Act of 1995, no persons are required to respond to a collection of information unless it displays a valid OMB control number.

Instruction Sheet for Petition to Make Special Under the Green Technology Pilot Program

(Not to be Submitted to the USPTO)

The following is a summary of the requirements (for more information see notice "Pilot Program for Green Technologies Including Greenhouse Gas Reduction" available on the USPTO web site at http://www.uspto.gov/web/offices/pac/dapp/ogsheet.html):

(1) The application must be a non-reissue, non-provisional utility application filed under 35 U.S.C. 111(a), or an international application that has entered the national stage in compliance with 35 U.S.C. 371. The application must be previously filed before the publication date of the notice cited above. Reexamination proceedings are excluded from this pilot program.

(2) The application must be classified in one of the U.S. classifications listed in section VI of the notice cited above at the time of examination.

(3) The application must contain three or fewer independent claims and twenty or fewer total claims. The application must not contain any multiple dependent claims. For an application that contains more than three independent claims or twenty total claims, or multiple dependent claims, applicant must file a preliminary amendment in compliance with 37 CFR 1.121 to cancel the excess claims and/or the multiple dependent claims at the time the petition to make special is filed.

(4) The claims must be directed to a single invention that materially enhances the quality of the environment, or that materially contributes to: (1) the discovery or development of renewable energy resources; (2) the more efficient utilization and conservation of energy resources; or (3) green house gas emission reduction (see the eligibility requirements of sections II and III of the notice cited above). The petition must include a statement that, if the USPTO determines that the claims are directed to multiple inventions (e.g., in a restriction requirement), applicant will agree to make an election without traverse in a telephonic interview, and elect an invention that meets the eligibility requirements in section II or III of the notice cited above and is classified in one of the U.S. classifications listed in section VI of the notice cited above.

(5) The petition to make special must be timely filed electronically using the USPTO electronic filing system, EFS-Web, and selecting the document description of "Petition for Green Tech Pilot" on the EFS-Web screen. Applicant should use form PTO/SB/420, which will be available as a Portable Document Format (PDF) fillable form in EFS-Web and on the USPTO Web site.

(6) The petition to make special must be filed at least one day prior to the date that a first Office action (which may be an Office action containing only a restriction requirement) appears in the Patent Application Information Retrieval (PAIR) system. Applicant may check the status of the application using PAIR.

(7) The petition to make special must be accompanied by a request for early publication in compliance with 37 CFR 1.219 and the publication fee set forth in 37 CFR 1.18(d).

Privacy Act Statement

The **Privacy Act of 1974 (P.L. 93-579)** requires that you be given certain information in connection with your submission of the attached form related to a patent application or patent. Accordingly, pursuant to the requirements of the Act, please be advised that: (1) the general authority for the collection of this information is 35 U.S.C. 2(b)(2); (2) furnishing of the information solicited is voluntary; and (3) the principal purpose for which the information is used by the U.S. Patent and Trademark Office is to process and/or examine your submission related to a patent application or patent. If you do not furnish the requested information, the U.S. Patent and Trademark Office may not be able to process and/or examine your submission, which may result in termination of proceedings or abandonment of the application or expiration of the patent.

The information provided by you in this form will be subject to the following routine uses:

1. The information on this form will be treated confidentially to the extent allowed under the Freedom of Information Act (5 U.S.C. 552) and the Privacy Act (5 U.S.C 552a). Records from this system of records may be disclosed to the Department of Justice to determine whether disclosure of these records is required by the Freedom of Information Act.

2. A record from this system of records may be disclosed, as a routine use, in the course of presenting evidence to a court, magistrate, or administrative tribunal, including disclosures to opposing counsel in the course of settlement negotiations.

3. A record in this system of records may be disclosed, as a routine use, to a Member of Congress submitting a request involving an individual, to whom the record pertains, when the individual has requested assistance from the Member with respect to the subject matter of the record.

4. A record in this system of records may be disclosed, as a routine use, to a contractor of the Agency having need for the information in order to perform a contract. Recipients of information shall be required to comply with the requirements of the Privacy Act of 1974, as amended, pursuant to 5 U.S.C. 552a(m).

5. A record related to an International Application filed under the Patent Cooperation Treaty in this system of records may be disclosed, as a routine use, to the International Bureau of the World Intellectual Property Organization, pursuant to the Patent Cooperation Treaty.

6. A record in this system of records may be disclosed, as a routine use, to another federal agency for purposes of National Security review (35 U.S.C. 181) and for review pursuant to the Atomic Energy Act (42 U.S.C. 218(c)).

7. A record from this system of records may be disclosed, as a routine use, to the Administrator, General Services, or his/her designee, during an inspection of records conducted by GSA as part of that agency's responsibility to recommend improvements in records management practices and programs, under authority of 44 U.S.C. 2904 and 2906. Such disclosure shall be made in accordance with the GSA regulations governing inspection of records for this purpose, and any other relevant (*i.e.*, GSA or Commerce) directive. Such disclosure shall not be used to make determinations about individuals.

8. A record from this system of records may be disclosed, as a routine use, to the public after either publication of the application pursuant to 35 U.S.C. 122(b) or issuance of a patent pursuant to 35 U.S.C. 151. Further, a record may be disclosed, subject to the limitations of 37 CFR 1.14, as a routine use, to the public if the record was filed in an application which became abandoned or in which the proceedings were terminated and which application is referenced by either a published application, an application open to public inspection or an issued patent.

9. A record from this system of records may be disclosed, as a routine use, to a Federal, State, or local law enforcement agency, if the USPTO becomes aware of a violation or potential violation of law or regulation.

IN THE UNITED STATES PATENT & TRADEMARK OFFICE

STATEMENT OF SPECIAL STATUS		
	Application No.	12/475,822
	Filing Date	June 1, 2009
	First Named Inventor	RICKWOOD, Martin
	TITLE	METHOD OF LASER-WELDING USING THERMAL TRANSFER DEPOSITION OF A LASER-ABSORBING DYE
	Confirmation No.	4239
	Group Art Unit	1795
	Examiner Name	ELVE, Maria Alexandra

The invention claimed in the present application materially enhances the quality of the environment through more efficient utilization and conservation of energy resources and materially contributes to green house gas emission reduction, and therefore should be accorded special status under the Green Technology Pilot Program.

The claimed invention provides an improved method of laser-welding polymeric substrates.

The claimed invention materially enhances the quality of the environment through more efficient utilization and conservation of energy resources. First, laser-welding techniques in general permit more efficient utilization and conservation of energy resources than solvent-based welding techniques. Second, the claimed invention permits a further reduction over the prior art in the amount of energy that is required in order to perform a welding operation between two substrates. The claimed invention permits the precise application of laser-weldable dye in a desired pattern on one of the two substrates that are to be welded together. Since a smaller, better-defined area of the substrate needs to be treated with the welding laser as compared to prior art techniques, the welding operation may be done more quickly and precisely, thereby more efficiently utilizing and conserving energy resources.

Moreover, the claimed invention materially enhances the quality of the environment by materially contributing to green house gas emission reduction. Application of the laser-weldable dye according to the claimed invention permits the omission of a carrier solvent or adhesive from the process. Carrier solvents and adhesives are commonly used in prior art techniques to dissolve the dyes to form an ink. Some known carrier solvent compounds and adhesives are extremely volatile and may find their way into wastewater discharge or may evaporate into the atmosphere in the form of greenhouse gases, thereby resulting in environmental contamination. Thus, the present invention materially contributes to an improvement in environmental quality and greenhouse gas emission reduction by allowing for the omission of carrier solvents and adhesives from the substrate welding process.

The Examiner is invited to contact the undersigned by telephone if a telephone interview would advance prosecution of the present application.

The Commissioner is hereby authorized to charge any additional fees which may be required regarding this application, or credit any overpayment, to Deposit Account No.50-3841. If proper payment is not enclosed herewith, the Commissioner is authorized to charge the unpaid amount to Deposit Account No. 50-3841.

Respectfully submitted,

By: */Damon A. Neagle/*
Damon A. Neagle
Attorney for Applicant(s)
Reg. No. 44,964

Date: September 2, 2011

DESIGN IP, P.C.
Telephone: (610) 395-4900
Facsimile: (610) 680-3312

UNITED STATES PATENT AND TRADEMARK OFFICE

UNITED STATES DEPARTMENT OF COMMERCE
United States Patent and Trademark Office
Address: COMMISSIONER FOR PATENTS
P.O. Box 1450
Alexandria, Virginia 22313-1450
www.uspto.gov

APPLICATION NO.	FILING DATE	FIRST NAMED INVENTOR	ATTORNEY DOCKET NO.	CONFIRMATION NO.
12/475,822	06/01/2009	Martin Rickwood	GTC-P0011	4239

79956 7590 09/13/2011
Design IP, A Professional Corporation
5100 W. Tilghman Street
Suite 205
Allentown, PA 18104

EXAMINER
ELVE, MARIA ALEXANDRA

ART UNIT	PAPER NUMBER
3742	

MAIL DATE	DELIVERY MODE
09/13/2011	PAPER

Please find below and/or attached an Office communication concerning this application or proceeding.

The time period for reply, if any, is set in the attached communication.

UNITED STATES PATENT AND TRADEMARK OFFICE

Commissioner for Patents
United States Patent and Trademark Office
P.O. Box 1450
Alexandria, VA 22313-1450
www.uspto.gov

Design IP, A Professional Corporation
5100 W. Tilghman Street
Suite 205
Allentown PA 18104

In re Application of	:	
RICKWOOD, MARTIN	:	DECISION ON PETITION
Application No. 12/475,822	:	TO MAKE SPECIAL UNDER
Filed: June 1, 2009	:	THE GREEN TECHNOLOGY
Attorney Docket No. GTC-P0011	:	PILOT PROGRAM

This is a decision on the petition under 37 CFR 1.102, filed Sep. 2, 2011 to make the above-identified application special under the pilot program for applications pertaining to Green Technologies as set forth in 74 Federal Register Notice 64666 (December 8, 2009) and amended by 75 Federal Register Notice 28554 (May 21, 2010) and 75 Federal Register Notice 69049 (November 10, 2010).

A grantable petition to make an application special under 37 CFR 1.102 and the pilot program as set forth in 74 FR 64666 must be directed to a nonprovisional application filed under 35 USC 111(a) or be a national stage entry under 35 USC 371, exclusive of any reissue applications.

If reconsideration of this decision is desired, a petition for reconsideration must be filed within ONE (1) MONTH OR THIRTY (30) DAYS from the mail date of this decision, whichever is longer. No extension of this time limit can be granted under 37 CFR 1.136(a) or (b). The petition for reconsideration should include an exhaustive attempt to provide the lacking item(s) noted below, since, after a decision on the petition for reconsideration, no further reconsideration or review of the matter will be undertaken by the Director.

In order to qualify for special status, the following requirements must be met. 1) The application must have no more than 3 independent claims and no more than 20 total claims. 2) The application must not contain any multiple dependent claims. 3) The petition must state the basis for seeking special status, i.e., the claimed invention either: A) materially enhances the quality of the environment or B) materially contributes to: i) the discovery or development of renewable energy resources, ii) the more efficient utilization and conservation of energy resources, or iii) greenhouse gas emission reduction. 4) If the disclosure is not clear on its face that the claimed invention materially contributes under category (A) or (B), the petition must be accompanied by a statement by the applicant, assignee, or an attorney/agent registered to practice before the Office explaining how the materiality standard is met. 5) A statement that applicant will agree to make an election without traverse in a telephonic interview if a restriction requirement is made

by the examiner. 6) The petition to make special must be filed electronically. 7) The petition must be filed at least one day prior to the date that a first Office Action appears in the Patent Application Information Retrieval (PAIR) system. 8) The petition must be accompanied by a request for early publication in compliance with 37 CFR 1.219 and include the publication fee as set forth in 37 CFR 1.18(d). The requirement for a fee for consideration of the petition to make special for applications pertaining to Green Technologies has been waived.

In regard to item 4, petitioner should note that the instant petition includes a statement identifying the basis for the special status (i.e., whether the instant invention (1) materially enhances the quality of the environment or materially contributes to (2) development of renewable energy resources or energy conservation, or (3) greenhouse gas reduction) as required by sections II and III of the notice. However, as stated in the notice, applicant must also provide a statement pertaining to the materiality standard if the application disclosure is not clear on its face as to the materiality of the basis for the special status of the invention. This petition lacks such a statement and it is not agreed that the application on its face meets that materiality standard. Petitioner states that the claimed invention relates to green technology. This is not convincing. It is not clear how the claimed method of transferring and welding will provide and enhance the quality of the environment or contribute to development of renewable energy resources or energy conservation or greenhouse gas reduction.

Telephone inquires concerning this decision should be directed to Henry C. Yuen at 571-272-4856. This application will be forwarded to the Technology Center Art Unit 3742 for action on the merits commensurate with this decision.

/Henry C. Yuen/

Henry C. Yuen
Quality Assurance Specialist
Technology Center TC 3700

UNITED STATES PATENT AND TRADEMARK OFFICE

Commissioner for Patents
United States Patent and Trademark Office
P.O. Box 1450
Alexandria, VA 22313-1450
www.uspto.gov

NIXON PEABODY, LLP
401 9TH STREET, NW
SUITE 900
WASHINGTON DC 20004-2128

MAILED
NOV 10 2010
OFFICE OF PETITIONS

In re Application of
Edgardo Valenzuela, et al.
Application No. 12/475,836
Filed: June 1, 2009
Attorney Docket No. 111325-320200

DECISION ON PETITION
TO WITHDRAW
FROM RECORD

This is a decision on the Request to Withdraw as attorney or agent under 37 C.F.R. § 1.36(b) filed September 10, 2010.

The request is **NOT APPROVED**.

The Office will no longer approve requests from practitioners to withdraw from application where the requesting practitioners is acting, or has acted, in a representative capacity pursuant to 37 CFR 1.34. In these situations, the practitioner is responsible for the correspondence the practitioner files in the application while acting in a representative capacity. As such, there is no need for the practitioner to obtain the Office's permission to withdraw from representation. However, practitioners acting in a representative capacity, like practitioners who have power of attorney in the application, remain responsible for noncompliance with 37 CFR 1.56, as well as 37 CFR 10.18, with respect to the documents they file.

A review of the file record indicates that Nixon Peabody, LLP does not have power of attorney in this patent application. See 37 C.F.R. § 10.40. Accordingly, the request to withdraw under 37 C.F.R. § 1.36(b) is not applicable.

All future communications from the Office will continue to be directed to the above-listed address until otherwise properly notified by the applicant.

There are no pending Office actions at the present time.

Telephone inquires concerning this decision should be directed to undersigned at 571-272-1642.

All other inquiries concerning the examination or status of this application should be directed to the Technology Center.

/AMW/
April M. Wise
Petitions Examiner
Office of Petitions

cc: CONTENTGUARD HOLDINGS, INC.
222 N. SEPULVEDA BLVD
SUITE 1400
EL SEGUNDO, CA 90245

UNITED STATES PATENT AND TRADEMARK OFFICE

Commissioner for Patents
United States Patent and Trademark Office
P.O. Box 1450
Alexandria, VA 22313-1450
www.uspto.gov

NAVAL RESEARCH LABORATORY
ASSOCIATE COUNSEL (PATENTS)
CODE 1008.2
4555 OVERLOOK AVENUE, S.W.
WASHINGTON DC 20375-5320

MAILED

JUL 05 2011

OFFICE OF PETITIONS

In re Application of	:	
SHEEHAN et al.	:	
Application No. 12/475,837	:	DECISION DISMISSING PETITIONS
Filed: June 1, 2009	:	UNDER 37 CFR 1.78(a)(3) AND (a)(6)
Attorney Docket No.: 99780-US1	:	

This is a decision on the petition under 37 CFR §§ 1.78(a)(3) and 1.78(a)(6), filed June 9, 2011, to accept an unintentionally delayed claim under 35 U.S.C. §§ 120 and 119(e) for the benefit of priority to the prior-filed nonprovisional and provisional applications set forth in the concurrently filed amendment.

The petition is **DISMISSED**

A petition for acceptance of a claim for late priority under 37 CFR §§ 1.78(a)(3) and 1.78(a)(6) is only applicable to those applications filed on or after November 29, 2000 and after the expiration of the period specified in 37 CFR §§ 1.78(a)(2)(ii) and 1.78(a)(5)(ii). In addition, the petition under 37 CFR §§ 1.78(a)(3) and 1.78(a)(6) must be accompanied by:

(1) the reference required by 35 U.S.C. §§ 120 and 119(e) and 37 CFR §§ 1.78(a)(2)(i) and 1.78(a)(5)(i) of the prior-filed application, unless previously submitted;
(2) the surcharge set forth in § 1.17(t); and
(3) a statement that the entire delay between the date the claim was due under 37 CFR §§ 1.78(a)(2)(ii) and 1.78(a)(5)(ii) and the date the claim was filed was unintentional. The Director may require additional where there is a question whether the delay was unintentional.

The petition fails to satisfy item (1) above. In this regard, the amendment submitted with the petition references the prior-filed application by the patent number rather than by the application number. Further, it appears that patent number 7,541,026 is incorrectly cited. The correct patent number should be 7,541,062 which would correspond to application serial number 10/956,596. *Note* 35 U.S.C. § 120, which provide, in relevant part:

> No application shall be entitled to the benefit of an earlier filed application under this section unless an amendment containing the specific reference to the earlier filed **application** is submitted at such time during the pendency of the application as required by the Director. [Emphasis supplied.]

Note also CFR 1.78(a)(2)(i), which states, in relevant part:

> Except for a continued prosecution application filed under § 1.53(d), any nonprovisional application claiming the benefit of one or more prior-filed copending nonprovisional applications * * * must contain or be amended to contain a reference to each such prior-filed application, **identifying it by application number (consisting of the series code and serial number)** *** and indicating the relationship of the applications. [Emphasis supplied.]

In reviewing the chain of applications to which petitioner is seeking a claim for priority, it does not appear that application serial number 12/263,631 (which corresponds to patent number 7,541,026) shares an inventor in common with application serial number 12/475,837. *See* MPEP 201.11 IV. Same inventor or inventors.

Further, application serial number 12/263,631 does not make reference to provisional application serial number 60/603,518. Appropriate references must be made in each intermediate application in the chain of prior applications. *See* MPEP Section 201.11 III.C. Reference to Prior Nonprovisional Applications.

Also, 37 CFR §§ 1.78(a)(3) and 1.78(a)(6) require a statement that the entire delay between the date the claim was due under 37 CFR §§ 1.78(a)(2)(ii) and 1.78(a)(5)(ii) and the date the claim was filed was unintentional. Since the statement appearing in the petition varies from the required language, the statement is being construed as the statement required by 37 CFR §§1.78(a)(3) and 1.78(a))(6). If this is not a correct reading of the statement appearing in the petition, petitioner should promptly notify the Office.

Before the petition under 37 CFR §§ 1.78(a)(3) and 1.78(a)(6) can be granted, a renewed petition and either an Application Data Sheet or a substitute amendment (complying with the provisions of 37 CFR 1.121 and 37 CFR 1.76(b)(5)) to correct the above matters are required.

Further correspondence with respect to this matter should be addressed as follows:

By mail: Mail Stop PETITIONS
Commissioner for Patents
Post Office Box 1450
Alexandria, VA 22313-1450

By hand: Customer Service Window
Mail Stop Petitions
Randolph Building
401 Dulany Street
Alexandria, VA 22314

By fax: (571) 273-8300
ATTN: Office of Petitions

Any questions concerning this matter may be directed to Jose' G Dees at (571) 272-1569.

David Bucci
Petitions Examiner
Office of Petitions

UNITED STATES PATENT AND TRADEMARK OFFICE

Commissioner for Patents
United States Patent and Trademark Office
P.O. Box 1450
Alexandria, VA 22313-1450
www.uspto.gov

NAVAL RESEARCH LABORATORY
ASSOCIATE COUNSEL (PATENTS)
CODE 1008.2
4555 OVERLOOK AVENUE, S.W.
WASHINGTON DC 20375-5320

MAILED
AUG 15 2011
OFFICE OF PETITIONS

In re Application of	:
SHEEHAN et al.	:
Application No. 12/475,837	: DECISION ON PETITIONS
Filed: June 1, 2009	: UNDER 37 CFR 1.78(a)(3) AND (a)(6)
Attorney Docket No.: 99780-US1	:

This is a decision on the renewed petitions under 37 CFR §§ 1.78(a)(3) and 1.78(a)(6), filed July 12, 2011, to accept an unintentionally delayed claim under 35 U.S.C. §§120 and 119(e) for the benefit of the prior-filed applications as set forth in the currently filed amendment.

The petitions are **GRANTED.**

A petition for acceptance of a claim for late priority under 37 CFR §§ 1.78(a)(3) and 1.78(a)(6) is only applicable to those applications filed on or after November 29, 2000. Further, the petition is appropriate only after the expiration of the period specified in 37 CFR §§ 1.78(a)(2)(ii) and 1.78(a)(5)(ii). In addition, the petition under 37 CFR §§ 1.78(a)(3) and 1.78(a)(6) must be accompanied by:

(1) the reference required by 35 U.S.C. §§ 120 and 119(e) and 37 CFR §§ 1.78(a)(2)(i) and 1.78(a)(5)(i) of the prior-filed application, unless previously submitted;
(2) the surcharge set forth in § 1.17(t); and
(3) a statement that the entire delay between the date the claim was due under 37 CFR §§ 1.78(a)(2)(ii) and 1.78(a)(5)(ii) and the date the claim was filed was unintentional. The Director may require additional information where there is a question whether the delay was unintentional.

Additionally, the instant nonprovisional application must be pending at the time of filing of the reference to the prior-filed provisional application as required by 37 CFR 1.78(a)(5)(ii). Further, the nonprovisional application claiming the benefit of the prior-filed provisional application must have been filed within twelve months of the filing date of the prior-filed provisional application.

All the above requirements having been satisfied, the late claim for benefit of priority under 35 U.S.C. §§ 120 and 119(e) is accepted as being unintentionally delayed.

The granting of the petition to accept the delayed benefit claim to the prior-filed applications under 37 CFR §§ 1.78(a)(3) and 1.78(a)(6) should not be construed as meaning that this application is entitled to the benefit of the filing date of the prior-filed applications. In order for this application to be entitled to the benefit of the prior-filed applications, all other requirements under 35 U.S.C. §§120 and 1.78(a)(1) and (a)(2) and under 35 U.S.C. §119(e) and 37 CFR 1.78(a)(4) and (a)(5) must be met. Similarly, the fact that the corrected Filing Receipt accompanying this decision on petition includes the prior-filed applications should not be construed as meaning that applicant is entitled to the claim for benefit of priority to the prior-filed applications noted thereon. Accordingly, the examiner will, in due course, consider this benefit claim and determine whether the application is entitled to the benefit of the earlier filing date.

A corrected Filing Receipt, which includes the priority claim to the prior-filed applications, accompanies this decision on petition.

Any questions concerning this matter may be directed to Jose' G Dees at (571) 272-1569. All other inquiries concerning either the examination procedures or status of the application should be directed to the Technology Center.

This application is being forwarded to Technology Center Art Unit 1717 for consideration by the examiner of the claim under 35 U.S.C. § §120 and 119(e) of the prior-filed nonprovisional and provisional applications.

David Bucci
Petitions Examiner
Office of Petitions

ATTACHMENT : Corrected Filing Receipt

UNITED STATES PATENT AND TRADEMARK OFFICE

UNITED STATES DEPARTMENT OF COMMERCE
United States Patent and Trademark Office
Address: COMMISSIONER FOR PATENTS
P.O. Box 1450
Alexandria, Virginia 22313-1450
www.uspto.gov

APPLICATION NUMBER	FILING or 371(c) DATE	GRP ART UNIT	FIL FEE REC'D	ATTY.DOCKET.NO	TOT CLAIMS	IND CLAIMS
12/475,837	06/01/2009	1717	1220	99780-US1	17	1

CONFIRMATION NO. 4268

CORRECTED FILING RECEIPT

26384
NAVAL RESEARCH LABORATORY
ASSOCIATE COUNSEL (PATENTS)
CODE 1008.2
4555 OVERLOOK AVENUE, S.W.
WASHINGTON, DC 20375-5320

OC000000049323241

Date Mailed: 08/15/2011

Receipt is acknowledged of this non-provisional patent application. The application will be taken up for examination in due course. Applicant will be notified as to the results of the examination. Any correspondence concerning the application must include the following identification information: the U.S. APPLICATION NUMBER, FILING DATE, NAME OF APPLICANT, and TITLE OF INVENTION. Fees transmitted by check or draft are subject to collection. Please verify the accuracy of the data presented on this receipt. **If an error is noted on this Filing Receipt, please submit a written request for a Filing Receipt Correction. Please provide a copy of this Filing Receipt with the changes noted thereon. If you received a "Notice to File Missing Parts" for this application, please submit any corrections to this Filing Receipt with your reply to the Notice. When the USPTO processes the reply to the Notice, the USPTO will generate another Filing Receipt incorporating the requested corrections**

Applicant(s)

Paul E. Sheehan, Springfield, VA;
Lloyd J. Whitman, Alexandria, VA;
William P. King, Atlanta, GA;

Power of Attorney: The patent practitioners associated with Customer Number 26384

Domestic Priority data as claimed by applicant

This application is a DIV of 10/956,596 09/29/2004 PAT 7,541,062
which claims benefit of 60/603,518 08/18/2004

Foreign Applications (You may be eligible to benefit from the **Patent Prosecution Highway** program at the USPTO. Please see http://www.uspto.gov for more information.)

If Required, Foreign Filing License Granted: 06/08/2009

The country code and number of your priority application, to be used for filing abroad under the Paris Convention, is **US 12/475,837**

Projected Publication Date: Not Applicable

Non-Publication Request: No

Early Publication Request: No

Title

THERMAL CONTROL OF DEPOSITION IN DIP PEN NANOLITHOGRAPHY

Preliminary Class

118

PROTECTING YOUR INVENTION OUTSIDE THE UNITED STATES

Since the rights granted by a U.S. patent extend only throughout the territory of the United States and have no effect in a foreign country, an inventor who wishes patent protection in another country must apply for a patent in a specific country or in regional patent offices. Applicants may wish to consider the filing of an international application under the Patent Cooperation Treaty (PCT). An international (PCT) application generally has the same effect as a regular national patent application in each PCT-member country. The PCT process **simplifies** the filing of patent applications on the same invention in member countries, but **does not result** in a grant of "an international patent" and does not eliminate the need of applicants to file additional documents and fees in countries where patent protection is desired.

Almost every country has its own patent law, and a person desiring a patent in a particular country must make an application for patent in that country in accordance with its particular laws. Since the laws of many countries differ in various respects from the patent law of the United States, applicants are advised to seek guidance from specific foreign countries to ensure that patent rights are not lost prematurely.

Applicants also are advised that in the case of inventions made in the United States, the Director of the USPTO must issue a license before applicants can apply for a patent in a foreign country. The filing of a U.S. patent application serves as a request for a foreign filing license. The application's filing receipt contains further information and guidance as to the status of applicant's license for foreign filing.

Applicants may wish to consult the USPTO booklet, "General Information Concerning Patents" (specifically, the section entitled "Treaties and Foreign Patents") for more information on timeframes and deadlines for filing foreign patent applications. The guide is available either by contacting the USPTO Contact Center at 800-786-9199, or it can be viewed on the USPTO website at http://www.uspto.gov/web/offices/pac/doc/general/index.html.

For information on preventing theft of your intellectual property (patents, trademarks and copyrights), you may wish to consult the U.S. Government website, http://www.stopfakes.gov. Part of a Department of Commerce initiative, this website includes self-help "toolkits" giving innovators guidance on how to protect intellectual property in specific countries such as China, Korea and Mexico. For questions regarding patent enforcement issues, applicants may call the U.S. Government hotline at 1-866-999-HALT (1-866-999-4158).

LICENSE FOR FOREIGN FILING UNDER

Title 35, United States Code, Section 184

Title 37, Code of Federal Regulations, 5.11 & 5.15

GRANTED

The applicant has been granted a license under 35 U.S.C. 184, if the phrase "IF REQUIRED, FOREIGN FILING LICENSE GRANTED" followed by a date appears on this form. Such licenses are issued in all applications where the conditions for issuance of a license have been met, regardless of whether or not a license may be required as

set forth in 37 CFR 5.15. The scope and limitations of this license are set forth in 37 CFR 5.15(a) unless an earlier license has been issued under 37 CFR 5.15(b). The license is subject to revocation upon written notification. The date indicated is the effective date of the license, unless an earlier license of similar scope has been granted under 37 CFR 5.13 or 5.14.

This license is to be retained by the licensee and may be used at any time on or after the effective date thereof unless it is revoked. This license is automatically transferred to any related applications(s) filed under 37 CFR 1.53(d). This license is not retroactive.

The grant of a license does not in any way lessen the responsibility of a licensee for the security of the subject matter as imposed by any Government contract or the provisions of existing laws relating to espionage and the national security or the export of technical data. Licensees should apprise themselves of current regulations especially with respect to certain countries, of other agencies, particularly the Office of Defense Trade Controls, Department of State (with respect to Arms, Munitions and Implements of War (22 CFR 121-128)); the Bureau of Industry and Security, Department of Commerce (15 CFR parts 730-774); the Office of Foreign AssetsControl, Department of Treasury (31 CFR Parts 500+) and the Department of Energy.

NOT GRANTED

No license under 35 U.S.C. 184 has been granted at this time, if the phrase "IF REQUIRED, FOREIGN FILING LICENSE GRANTED" DOES NOT appear on this form. Applicant may still petition for a license under 37 CFR 5.12, if a license is desired before the expiration of 6 months from the filing date of the application. If 6 months has lapsed from the filing date of this application and the licensee has not received any indication of a secrecy order under 35 U.S.C. 181, the licensee may foreign file the application pursuant to 37 CFR 5.15(b).

UNITED STATES PATENT AND TRADEMARK OFFICE

Commissioner for Patents
United States Patent and Trademark Office
P.O. Box 1450
Alexandria, VA 22313-1450
www.uspto.gov

TUTUNJIAN & BITETTO, P.C.
425 BROADHOLLOW ROAD, SUITE 302
MELVILLE NY 11747

MAILED

FEB 13 2012

OFFICE OF PETITIONS

In re Application of	:	
Zilca, et al.	:	
Application No. 12/475,871	:	DECISION
Filed/Deposited: 1 June, 2009	:	
Attorney Docket No. 378-16	:	

This is a decision on the papers filed on 28 December, 2011, pursuant to 37 C.F.R. §1.137(b) for revival of an application abandoned due to unintentional delay.

The petition pursuant to 37 C.F.R. §1.137(b) is **GRANTED**.

As to the Allegations
of Unintentional Delay

The requirements of a grantable petition pursuant to 37 C.F.R. §1.137(b) are the petition and fee therefor, a reply, a proper statement and/or showing of unintentional delay under the regulation, and, where applicable, a terminal disclaimer and fee

Petitioners' attentions always are directed to the guidance in the Commentary at MPEP §711.03(c)(II).

BACKGROUND

The record reflects as follows:

Petitioner failed to reply timely and properly to the non-final Office action mailed on 4 April, 2011, with reply due absent an extension of time on or before the first business day following 4 July, 2011.

The application went abandoned by operation of law after midnight 4 July, 2011.

The Office mailed the Notice of Abandonment on 25 October, 2011.

On 28 December, 2011, Petitioner filed, *inter alia*, a petition pursuant to 37 C.F.R. §1.137(b), with fee, a reply in the form an amendment, and made the statement of unintentional delay.

Petitioners' attentions always are directed to the guidance in the Commentary at MPEP §711.03(c) as to the showing regarding unintentional delay and a petition pursuant to 37 C.F.R. §1.137(b).

The availability of applications and application papers online to applicants/practitioners who diligently associate their Customer Number with the respective application(s) now provides an applicant/practitioner on-demand information as to events/transactions in an application.

Out of an abundance of caution, Petitioners always are reminded that those registered to practice and all others who make representations before the Office **must** inquire into the underlying facts of representations made to the Office and support averments with the appropriate documentation–since all owe to the Office the continuing duty to disclose.[1]

STATUTES, REGULATIONS

Congress has authorized the Commissioner to "revive an application if the delay is shown to the satisfaction of the Commissioner to have been "unavoidable." 35 U.S.C. §133 (1994). And the regulations at 37 C.F.R. §1.137(a) and (b) set forth the requirements for a Petitioner to revive a previously unavoidably or unintentionally, respectively, abandoned application.[2],[3]

Moreover, the Office has set forth in the Commentary at MPEP §711.03(c)(I) the showing and timeliness requirements for a proper showing for relief under 37 C.F.R. §1.181 in these matters.

---

[1] See supplement of 17 June, 1999. The Patent and Trademark Office is relying on petitioner's duty of candor and good faith and accepting a statement made by Petitioner. See Changes to Patent Practice and Procedure, 62 Fed. Reg. at 53160 and 53178, 1203 Off. Gaz. Pat. Office at 88 and 103 (responses to comments 64 and 109)(applicant obligated under 37 C.F.R. §11.18, formerly §10.18, to inquire into the underlying facts and circumstances when providing statements to the Patent and Trademark Office).

[2] See: Changes to Patent Practice and Procedure; Final Rule Notice, 62 Fed. Reg. at 53158-59 (October 10, 1997), 1203 Off. Gaz. Pat. Office at 86-87 (October 21, 1997).

[3] The language of 35 U.S.C. §133 and 37 C.F.R. §1.137(a) is clear, unambiguous, and without qualification: the delay in tendering the reply to the outstanding Office action, as well as filing the first petition seeking revival, must have been unavoidable for the reply now to be accepted on petition. (Therefore, by example, an unavoidable delay in the payment of the Filing Fee might occur if a reply is shipped by the US Postal Service, but due to catastrophic accident, the delivery is not made.) Delays in responding properly raise the question whether delays are unavoidable. Where there is a question whether the delay was unavoidable, Petitioners must meet the burden of establishing that the delay was unavoidable within the meaning of 35 U.S.C. §133 and 37 C.F.R. §1.137(a) And the Petitioner must be diligent in attending to the matter. Failure to do so does not constitute the care required under Pratt, and so cannot satisfy the test for diligence and due care. (By contrast, unintentional delays are those that do not satisfy the very strict statutory and regulatory requirements of unavoidable delay, and also, by definition, are not intentional.))

Decisions on reviving abandoned applications on the basis of "unavoidable" delay have adopted the reasonably prudent person standard in determining if the delay was unavoidable:

> The word 'unavoidable' . . . is applicable to ordinary human affairs, and requires no more or greater care or diligence than is generally used and observed by prudent and careful men in relation to their most important business. It permits them in the exercise of this care to rely upon the ordinary and trustworthy agencies of mail and telegraph, worthy and reliable employees, and such other means and instrumentalities as are usually employed in such important business. If unexpectedly, or through the unforeseen fault or imperfection of these agencies and instrumentalities, there occurs a failure, it may properly be said to be unavoidable, all other conditions of promptness in its rectification being present.[4]

As to Allegations of
Unintentional Delay

As indicated above, the requirements of a grantable petition pursuant to 37 C.F.R. §1.137(b) are the petition and fee therefor, a proper reply, a proper statement and/or showing of unintentional delay under the regulation, and, where applicable, a terminal disclaimer and fee.

It appears that the requirements under the rule have been satisfied.

CONCLUSION

Accordingly, the petition pursuant to 37 C.F.R. §1.137(b) is **granted**.

The instant application is released to the Technology Center/AU 3629 for further processing in due course.

Petitioner may find it beneficial to view Private PAIR within a fortnight of the instant decision to ensure that the revival has been acknowledged by the TC/AU in response to this decision. It is noted that all inquiries with regard to status need be directed to the TC/AU where that change of status must be effected—that does not occur in the Office of Petitions.

---

[4] In re Mattullath, 38 App. D.C. 497, 514-15 (1912)(quoting Ex parte Pratt, 1887 Dec. Comm'r Pat. 31, 32-33 (1887)); see also Winkler v. Ladd, 221 F. Supp. 550, 552, 138 USPQ 666, 167-68 (D.D.C. 1963), aff'd, 143 USPQ 172 (D.C. Cir. 1963); Ex parte Henrich, 1913 Dec. Comm'r Pat. 139, 141 (1913). In addition, decisions on revival are made on a "case-by-case basis, taking all the facts and circumstances into account." Smith v. Mossinghoff, 671 F.2d 533, 538, 213 USPQ 977, 982 (D.C. Cir. 1982). Finally, a petition cannot be granted where a petitioner has failed to meet his or her burden of establishing that the delay was "unavoidable." Haines v. Quigg, 673 F. Supp. 314, 316-17, 5 USPQ2d 1130, 1131-32 (N.D. Ind. 1987).

Telephone inquiries regarding this decision may be directed to the undersigned at (571) 272-3214—it is noted, however , that all practice before the Office is in writing (see: 37 C.F.R. §1.2[5]) and the proper authority for action on any matter in this regard are the statutes (35 U.S.C.), regulations (37 C.F.R.) and the commentary on policy (MPEP). Therefore, no telephone discussion may be controlling or considered authority for Petitioner's action(s).

/John J. Gillon, Jr./
John J. Gillon, Jr.
Senior Attorney
Office of Petitions

[5] The regulations at 37 C.F.R. §1.2 provide:
§1.2 Business to be transacted in writing.
All business with the Patent and Trademark Office should be transacted in writing. The personal attdance of applicants or their attorneys or agents at the Patent and Trademark Office is unnecessary. The action of the Patent and Trademark Office will be based exclusively on the written record in the Office. No attention will be paid to any alleged oral promise, stipulation, or understanding in relation to which there is disagreement or doubt.

UNITED STATES PATENT AND TRADEMARK OFFICE

Commissioner for Patents
United States Patent and Trademark Office
P.O. Box 1450
Alexandria, VA 22313-1450
www.uspto.gov

In re Application of
Peter A. BROMS

Application No. 12475977

Filed: June 1,2009

Attorney Docket No. ACUS204.2US

:
:
:DECISION ON PETITION TO MAKE SPECIAL
:UNDER 37 CFR 1.102(c)(1)
:

This is a decision on the electronic petition under 37 CFR 1.102 (c)(1), filed 22-JUN-2011 to make the above-identified application special based on applicant's age as set forth in MPEP § 708.02, Section IV.

The petition is **GRANTED**.

A grantable petition to make an application special under 37 CFR 1.102(c)(1), MPEP § 708.02, Section IV: Applicant's Age must include a statement by applicant or a registered practitioner having evidence that applicant is at least 65 years of age. No fee is required.

Accordingly, the above-identified application has been accorded "special" status and will be taken up for action by the examiner upon the completion of all pre-examination processing.

Telephone inquiries concerning this electronic decision should be directed to the Electronic Business Center at 866-217-9197.

All other inquiries concerning either the examination or status of the application should be directed to the Technology Center.

Doc code : PET.OP.AGE
Description : Petition to make special based on Age/Health

PTO/SB/130 (07-09)
Approved for use through 07/31/2012. OMB 0651- 0031
U.S. Patent and Trademark Office; U.S. DEPARTMENT OF COMMERCE
Under the Paperwork Reduction Act of 1995, no persons are required to respond to a collection of information unless it contains a valid OMB control number

PETITION TO MAKE SPECIAL BASED ON AGE FOR ADVANCEMENT OF EXAMINATION UNDER 37 CFR 1.102(c)(1)

Application Information

Application Number	12/475,977	Confirmation Number	4530	Filing Date	2009-06-01
Attorney Docket Number (optional)	ACUS204.2US	Art Unit	3695	Examiner	Thomas M Hammond III
First Named Inventor	PETER A. BROMS				
Title of Invention	ADJUSTABLE DERIVATIVE SECURITIES AND METHOD FOR ADJUSTING THE VALUE OF SAME DUE TO A CORPORATE EVENT				

Attention: Office of Petitions
An application may be made special for advancement of examination upon filing of a petition showing that the applicant is 65 years of age, or more. No fee is required with such a petition. See 37 CFR 1.102(c)(1) and MPEP 708.02 (IV).

APPLICANT HEREBY PETITIONS TO MAKE SPECIAL FOR ADVANCEMENT OF EXAMINATION IN THIS APPLICATION UNDER 37 CFR 1.102(c)(1) and MPEP 708.02 (IV) ON THE BASIS OF THE APPLICANT'S AGE.

A grantable petition requires one of the following items:
(1) Statement by one named inventor in the application that he/she is 65 years of age, or more; or
(2) Certification by a registered attorney/agent having evidence such as a birth certificate, passport, driver's license, etc. showing one named inventor in the application is 65 years of age, or more.

Name of Inventor who is 65 years of age, or older

Given Name	Middle Name	Family Name	Suffix
PETER	A.	BROMS	

A signature of the applicant or representative is required in accordance with 37 CFR 1.33 and 10.18.
Please see 37 CFR 1.4(d) for the format of the signature.

Select (1) or (2) :

○ (1) I am an inventor in this application and I am 65 years of age, or more.

● (2) I am an attorney or agent registered to practice before the Patent and Trademark Office, and I certify that I am in possession of evidence, and will retain such in the application file record, showing that the inventor listed above is 65 years of age, or more.

Signature	/C. ANDREW IM/	Date (YYYY-MM-DD)	2011-06-22
Name	C. ANDREW IM	Registration Number	40657

PTO/SB/130 (07-09)
Approved for use through 07/31/2012. OMB 0651- 0031
U.S. Patent and Trademark Office; U.S. DEPARTMENT OF COMMERCE
Under the Paperwork Reduction Act of 1995, no persons are required to respond to a collection of information unless it contains a valid OMB control number

Privacy Act Statement

The Privacy Act of 1974 (P.L. 93-579) requires that you be given certain information in connection with your submission of the attached form related to a patent application or patent. Accordingly, pursuant to the requirements of the Act, please be advised that: (1) the general authority for the collection of this information is 35 U.S.C. 2(b)(2); (2) furnishing of the information solicited is voluntary; and (3) the principal purpose for which the information is used by the U.S. Patent and Trademark Office is to process and/or examine your submission related to a patent application or patent. If you do not furnish the requested information, the U.S. Patent and Trademark Office may not be able to process and/or examine your submission, which may result in termination of proceedings or abandonment of the application or expiration of the patent.

The information provided by you in this form will be subject to the following routine uses:

1. The information on this form will be treated confidentially to the extent allowed under the Freedom of Information Act (5 U.S.C. 552) and the Privacy Act (5 U.S.C. 552a). Records from this system of records may be disclosed to the Department of Justice to determine whether the Fr eedom of Information Act requires disclosure of these records.

2. A record from this system of records may be disclosed, as a routine use, in the course of presenting evidence to a court, magistrate, or administrative tribunal, including disclosures to opposing counsel in the course of settlement negotiations.

3. A record in this system of records may be disclosed, as a routine use, to a Member of Congress submitting a request involving an individual, to whom the record pertains, when the individual has requested assistance from the Member with respect to the subject matter of the record.

4. A record in this system of records may be disclosed, as a routine use, to a contractor of the Agency having need for the information in order to perform a contract. Recipients of information shall be required to comply with the requirements of the Privacy Act of 1974, as amended, pursuant to 5 U.S.C. 552a(m).

5. A record related to an International Application filed under the Patent Cooperation Treaty in this system of records may be disclosed, as a routine use, to the International Bureau of the World Intellectual Property Organization, pursuant to the Patent Cooperation Treaty.

6. A record in this system of records may be disclosed, as a routine use, to another federal agency for purposes of National Security review (35 U.S.C. 181) and for review pursuant to the Atomic Energy Act (42 U.S.C. 218(c)).

7. A record from this system of records may be disclosed, as a routine use, to the Administrator, General Services, or his/her designee, during an inspection of records conducted by GSA as part of that agency's responsibility to recommend improvements in records management practices and programs, under authority of 44 U.S.C. 2904 and 2906. Such disclosure shall be made in accordance with the GSA regulations governing inspection of records for this purpose, and any other relevant (i.e., GSA or Commerce) directive. Such disclosure shall not be used to make determinations about indivi duals.

8. A record from this system of records may be disclosed, as a routine use, to the public after either publication of the application pursuant to 35 U.S.C. 122(b) or issuance of a patent pursuant to 35 U.S.C. 151. Further, a record may be disclosed, subject to the limitations of 37 CFR 1.14, as a routine use, to the public if the record was filed in an application which became abandoned or in which the proceedings were terminated and which application is referenced by either a published application, an application open to public inspections or an issued patent.

9. A record from this system of records may be disclosed, as a routine use, to a Federal, State, or local law enforcement agency, if the USPTO becomes aware of a violation or potential violation of law or regulation.

UNITED STATES PATENT AND TRADEMARK OFFICE

Commissioner for Patents
United States Patent and Trademark Office
P.O. Box 1450
Alexandria, VA 22313-1450
www.uspto.gov

April 17, 2012

Martin R. Geissler
Muncy, Geissler, Olds & Lowe, PLLC
Legato Road, Suite 310
Fairfax, VA 22033

Patent No.: 8,141,300 B2
Application No.: 12/476,021
Inventor(s): Felix Heckmann, et al.
Issued: March 27, 2012
Title: **ADJUSTMENT OF A MOTORIZED POSITIONING DEVICE**

Re: Request for Certificate of Correction

Consideration has been given your request for the issuance of a certificate of correction for the above-identified patent under the provisions of Rule 1.323.

A petition under C.F.R. 1.182 is required to correct the alleged error in the inventor's name. Since inventor's names are printed in accordance with the typed names on the Declaration on file, at the time of payment of the issue fee, and since non-initialed and/or non-dated changes are not taken into consideration no correction is in order here under the provision of C.F.R. 1.322 and /or 1.323.

In view of the foregoing, your request, in this mater, is hereby denied.

Any request under 37 CFR 1.182 (required fee currently $130.00) should be directed to the following address or facsimile number:

By mail: Mail Stop PETITIONS
Commissioner for Patents
Post Office Box 1450
Alexandria, VA 22313-1450

By hand: Customer Service Window
Mail Stop Petitions
Randolph Building
401 Dulany Street
Alexandria, VA 22314

By fax: (571) 273-0025
ATTN: Office of Petitions

If a fee (currently $100) was previously submitted for consideration of a Request for Certificate of Correction, under CFR 1.323, to correct assignment data, no additional fee is required.

/Virginia Tolbert/
Virginia Tolbert
For Mary Diggs, Supervisor
Decisions & Certificates
Of Correction Branch
571 272-0460 (voice)
571 270-9892 (fax)

vt

Powered by Dialog

Dialog eLink: Order File History

Recycling method of water soluble slurry for wire saw, involves effecting specified centrifugal force on used slurry to separate reusable and waste grind particles
Patent Assignee: NIIGATA TOSHIBA CERAMICS KK; TOSHIBA CERAMICS CO
Inventors: ENDO T; KAMITARI K; NAKAZAWA H; SASAKI M; TSUJIMOTO K; YANATORI H

Patent Family (1 patent, 1 country)

Patent Number	Kind	Date	Application Number	Kind	Date	Update	Type
JP 2000237958	A	20000905	JP 199940576	A	19990218	200116	B

Priority Application Number (Number Kind Date): JP 199940576 A 19990218

Patent Details

Patent Number	Kind	Language	Pages	Drawings	Filing Notes
JP 2000237958	A	JA	10	7	

Alerting Abstract: JP A

NOVELTY - The weight ratio of grinding particle and a water soluble solvent of slurry, before use, is set to 1:0.8-1.2. Centrifugal force in the range of 100G-1000G is effected on the used slurry by which reusable and waste grinding particles are isolated from the used slurry.

DESCRIPTION - A workpiece (W) is cut by pushing a wire saw (2) which contains a row (11) of wires. The slurry which contains grinding particles dispersed in a water soluble solvent, is supplied to the wire row. An INDEPENDENT CLAIM is also included for the recycling apparatus.

USE - For cutting semiconductor wafers.

ADVANTAGE - Enables efficient recovery of grinding particles and the water soluble solvent by subjecting the slurry to specified centrifugal force. Enables to make the wire saw function efficiently.

DESCRIPTION OF DRAWINGS - The figure shows the recycling apparatus.

2 Wire saw

11 Wire row

W Workpiece

International Patent Classification

IPC	Level	Value	Position	Status	Version

B24B-0057/02	A	I	F	R	20060101
B24B-0057/00	C	I	F	R	20060101

Original Publication Data by Authority

Japan
Publication Number: JP 2000237958 A (Update 200116 B)
Publication Date: 20000905
METHOD AND DEVICE FOR RECYCLING WATER SOLUBLE SLURRY FOR WIRE SAW
Assignee: TOSHIBA CERAMICS CO LTD (TOSF) NIIGATA TOSHIBA CERAMICS, KK (TOSF)
Inventor: TSUJIMOTO KENICHI ENDO TETSUYA SASAKI MICHIO YANATORI HIROKI KAMITARI KATSUAKI NAKAZAWA HIRONOBU
Language: JA (10 pages, 7 drawings)
Application: JP 199940576 A 19990218 (Local application)
Original IPC: B24B-57/02(A)
Current IPC: B24B-57/00(R,A,I,M,JP,20060101,20051220,C,F) B24B-57/02 (R,I,M,JP,20060101,20051220,A,F)
Current JP FI-Terms: B24B-57/02
Current JP F-Terms: 3C047 3C047GG14 3C047GG15 3C047GG17

Derwent World Patents Index
© 2010 Derwent Information Ltd. All rights reserved.
Dialog® File Number 351 Accession Number 10547148

UNITED STATES PATENT AND TRADEMARK OFFICE

Commissioner for Patents
United States Patent and Trademark Office
P.O. Box 1450
Alexandria, VA 22313-1450
www.uspto.gov

MAILED

JUL 11 2011

OFFICE OF PETITIONS

ZILKA-KOTAB, PC
P.O. BOX 721120
SAN JOSE, CA 95172-1120

In re Application of **Brent J. LYMER**, et *al.* Application No. 12/476,082 Filed: June 1, 2009 Attorney Docket No. **NAI1P327B/02.240.03**	DECISION ON PETITION TO WITHDRAW FROM RECORD

This is a decision on the Request to Withdraw as attorney or agent of record under 37 C.F.R. § 1.36(b), filed February 25, 2011.

The request is **DISMISSED** as moot.

A review of the file record indicates that the power of attorney to **ZILKA-KOTAB, PC** has been revoked by the assignee of the patent application on March 28, 2011. Accordingly, the request to withdraw under 37 C.F.R. § 1.36(b) is moot.

All future communications from the Office will continue to be directed to the below-listed address until otherwise notified by applicant.

Telephone inquires concerning this decision should be directed to the undersigned at 571-272- 7253.

/Monica A. Graves/
Petitions Examiner, Office of Petitions

cc: **PATENT CAPITAL GROUP**
6119 MCCOMMAS BLVD
DALLAS, TX 75214

UNITED STATES PATENT AND TRADEMARK OFFICE

UNITED STATES DEPARTMENT OF COMMERCE
United States Patent and Trademark Office
Address: COMMISSIONER FOR PATENTS
P.O. Box 1450
Alexandria, Virginia 22313-1450
www.uspto.gov

APPLICATION NO.	FILING DATE	FIRST NAMED INVENTOR	ATTORNEY DOCKET NO.	CONFIRMATION NO.
12/476,108	06/01/2009	Frits Herlaar	1458-022	4788

32905 7590 02/01/2011
JONDLE & ASSOCIATES P.C.
858 HAPPY CANYON ROAD SUITE 230
CASTLE ROCK, CO 80108

EXAMINER
BUI, PHUONG T

ART UNIT	PAPER NUMBER
1638	

NOTIFICATION DATE	DELIVERY MODE
02/01/2011	ELECTRONIC

Please find below and/or attached an Office communication concerning this application or proceeding.

The time period for reply, if any, is set in the attached communication.

Notice of the Office communication was sent electronically on above-indicated "Notification Date" to the following e-mail address(es):

JondleOA@jondlelaw.com

UNITED STATES PATENT AND TRADEMARK OFFICE

FEB 0 1 2011

Commissioner for Patents
United States Patent and Trademark Office
P.O. Box 1450
Alexandria, VA 22313-1450
www.uspto.gov

JONDLE & ASSOCIATES P.C.
858 HAPPY CANYON ROAD SUITE 230
CASTLE ROCK CO 80108

In re Application of:
Frits Herlaar
Serial No.: 12/476,108
Filed: June 1, 2009
Attorney Docket No.: **1458-022**

: PETITION DECISION

This is in response to the renewed petition under 37 CFR § 1.59(b), filed January 21, 2011, to expunge information from the above identified application. This application has been allowed.

Petitioner requests that the material submitted to the Patent Office on November 19, 2010 be expunged from the record. Petitioner states either: (A) that the information contains trade secret material, proprietary material and/or material that is subject to a protective order which has not been made public; or (B) that the information submitted was unintentionally submitted and the failure to obtain its return would cause irreparable harm to the party who submitted the information or to the party in interest on whose behalf the information was submitted, and the information has not otherwise been made public. The petition fee set forth in 37 CFR § 1.17(g) has been paid.

The reasons set forth in this petition establishes to the satisfaction of the Director that expungement of the information is appropriate. The file entry for this document has been closed and as such the document is no longer publicly available, which is the IFW equivalent to removal of a paper document from a paper file wrapper.

Therefore, petitioner's petition is GRANTED.

Should there be any questions about this decision please contact Marianne C. Seidel by letter addressed to Director, TC 1600, at the address listed above, or by telephone at 571-272-0584 or by facsimile sent to the general Office facsimile number, 571-273-8300.

/MC Seidel/
Marianne C. Seidel, Quality Assurance Specialist
Technology Center 1600

UNITED STATES PATENT AND TRADEMARK OFFICE

Commissioner for Patents
United States Patent and Trademark Office
P.O. Box 1450
Alexandria, VA 22313-1450
www.uspto.gov

MAR 0 3 2011

JONDLE & ASSOCIATES P.C.
858 HAPPY CANYON ROAD SUITE 230
CASTLE ROCK CO 80108

In re Application of:
Frits Herlaar
Serial No.: 12/476,108
Filed: June 1, 2009
Attorney Docket No.: **1458-022**

: PETITION DECISION

This is in response to the renewed petition under 37 CFR § 1.59(b), filed January 21, 2011, to expunge information from the above identified application. This application has been allowed.

Petitioner requests that the material submitted to the Patent Office on November 19, 2009 be expunged from the record. Petitioner states either: (A) that the information contains trade secret material, proprietary material and/or material that is subject to a protective order which has not been made public; or (B) that the information submitted was unintentionally submitted and the failure to obtain its return would cause irreparable harm to the party who submitted the information or to the party in interest on whose behalf the information was submitted, and the information has not otherwise been made public. The petition fee set forth in 37 CFR § 1.17(g) has been paid.

The reasons set forth in this petition establishes to the satisfaction of the Director that expungement of the information is appropriate. The file entry for this document has been closed and as such the document is no longer publicly available, which is the IFW equivalent to removal of a paper document from a paper file wrapper.

Therefore, petitioner's petition is GRANTED.

Should there be any questions about this decision please contact Marianne C. Seidel by letter addressed to Director, TC 1600, at the address listed above, or by telephone at 571-272-0584 or by facsimile sent to the general Office facsimile number, 571-273-8300.

/MC Seidel/
Marianne C. Seidel, Quality Assurance Specialist
Technology Center 1600

UNITED STATES PATENT AND TRADEMARK OFFICE

Commissioner for Patents
United States Patent and Trademark Office
P.O. Box 1450
Alexandria, VA 22313-1450
www.uspto.gov

PERKINS COIE LLP
P.O. BOX 1208
SEATTLE, WA 98111-1208

MAILED

OCT 20 2010

OFFICE OF PETITIONS

In re Application of	:	
HAYNES III, James M. et al.	:	
Application No. 12/476,160	:	DECISION ON PETITION
Filed: June 01, 2009	:	TO WITHDRAW
Attorney Docket No. **69390-8001.US01**	:	FROM RECORD
	:	

This is a decision on the Request to Withdraw as attorney or agent of record under 37 C.F.R. § 1.36(b), filed September 17, 2010.

The request is **NOT APPROVED** because it is moot.

A review of the file record indicates that the power of attorney to Perkins Coie LLP has been revoked by the assignee of the patent application on assignee. Accordingly, the request to withdraw under 37 C.F.R. § 1.36(b) is moot.

All future communications from the Office will continue to be directed to the below-listed address until otherwise notified by applicant.

Telephone inquires concerning this decision should be directed to Michelle R. Eason at 571-272- 4231.

Michelle R. Eason
Paralegal Specialist
Office of Petitions

cc: **SHEPPARD, MULLIN, RICHTER & HAMPTON LLP**
990 MARSH ROAD
MENLO PARK CA 94025

Doc Code: PET.GREEN
Document Description: Petition for Green Tech Pilot

PTO/SB/420 (05-10)
Approved for use through 01/31/2011. OMB 0651-0062
U.S. Patent and Trademark Office; U.S. DEPARTMENT OF COMMERCE
Under the Paperwork Reduction Act of 1995, no persons are required to respond to a collection of information unless it displays a valid OMB control number.

PETITION TO MAKE SPECIAL UNDER THE GREEN TECHNOLOGY PILOT PROGRAM

Attorney Docket Number: 026335-003010US	Application Number (if known): 12/476,174	Filing date: June 1, 2009

First Named Inventor: Howard W.H. Lee

Title: PROCESSING METHOD FOR CLEANING SULFUR ENTITIES OF CONTACT REGIONS

APPLICANT HEREBY REQUESTS TO PARTICIPATE IN THE GREEN TECHNOLOGY PILOT PROGRAM FOR THE ABOVE-IDENTIFIED APPLICATION. See Instruction Sheet on page 2.

This petition must be timely filed electronically using the USPTO electronic filing system, EFS-Web.

1. By filing this petition:

   Applicant is requesting early publication: Applicant hereby requests early publication under 37 CFR 1.219 and the publication fee set forth in 37 CFR 1.18(d) accompanies this request.

2. By filing this petition: applicant is agreeing to make an election without traverse in a telephonic interview and elect an invention that meets the eligibility requirements set forth in the notice titled "Pilot Program for Green Technologies Including Greenhouse Gas Reduction," as modified by the notice titled "Elimination of Classification Requirement in the Green Technology Pilot Program," each of which was published in the Federal Register, if the Office determines that the claims are not obviously directed to a single invention.

3. This request is accompanied by statements of special status for the eligibility requirement.

4. The application contains no more than three (3) independent claims and twenty (20) total claims.

5. The application does not contain any multiple dependent claims.

6. Other attachments: see attached Petition

Signature /Richard T. Ogawa/	Date 09/16/2010
Name (Print/Typed): Richard T. Ogawa	Registration Number 37,692

Note: *Signatures of all the inventors or assignees of record of the entire interest or their representative(s) are required in accordance with 37 CFR 1.33 and 11.18. Please see 37 CFR 1.4(d) for the form of the signature. If necessary, submit multiple forms for more than one signature, see below*.*

☐ *Total of _____ forms are submitted.

The information is required to obtain or retain a benefit by the public which is to file (and by the USPTO to process) an application. Confidentiality is governed by 35 U.S.C. 122 and 37 CFR 1.11 and 1.14. This collection is estimated to take 1 hour to complete, including gathering, preparing, and submitting the completed application form to the USPTO. Time will vary depending upon the individual case. Any comments on the amount of time you require to complete this form and/or suggestions for reducing this burden, should be sent to the Chief Information Officer, U.S. Patent and Trademark Office, U.S. Department of Commerce, P.O. Box 1450, Alexandria, VA 22313-1450. DO NOT SEND FEES OR COMPLETED FORMS TO THIS ADDRESS. **SEND TO: Commissioner for Patents, P.O. Box 1450, Alexandria, VA 22313-1450.**

If you need assistance in completing the form, call 1-800-PTO-9199 and select option 2.

Under the Paperwork Reduction Act of 1995, no persons are required to respond to a collection of information unless it displays a valid OMB control number.

Instruction Sheet for
Petition to Make Special Under the Green Technology Pilot Program

(Not to be Submitted to the USPTO)

The following is a summary of the requirements (for more information see the notices (i) "Pilot Program for Green Technologies Including Greenhouse Gas Reduction" and (ii) "Elimination of Classification Requirement in the Green Technology Pilot Program," available on the USPTO web site at http://www.uspto.gov/patents/init_events/green_tech.jsp):

(1) The application must be a non-reissue, non-provisional utility application filed under 35 U.S.C. 111(a), or an international application that has entered the national stage in compliance with 35 U.S.C. 371. The application must be previously filed before the publication date of the notice cited above. Reexamination proceedings are excluded from this pilot program.

(2) The application must contain three or fewer independent claims and twenty or fewer total claims. The application must not contain any multiple dependent claims. For an application that contains more than three independent claims or twenty total claims, or multiple dependent claims, applicant must file a preliminary amendment in compliance with 37 CFR 1.121 to cancel the excess claims and/or the multiple dependent claims at the time the petition to make special is filed.

(3) The claims must be directed to a single invention that materially enhances the quality of the environment, or that materially contributes to: (1) the discovery or development of renewable energy resources; (2) the more efficient utilization and conservation of energy resources; or (3) green house gas emission reduction (see the eligibility requirements of sections II and III of the notice (i) cited above). The petition must include a statement that, if the USPTO determines that the claims are directed to multiple inventions (e.g., in a restriction requirement), applicant will agree to make an election without traverse in a telephonic interview, and elect an invention that meets the eligibility requirements in section II or III of the notice (i) cited above.

(4) The petition to make special must be timely filed electronically using the USPTO electronic filing system, EFS-Web, and selecting the document description of "Petition for Green Tech Pilot" on the EFS-Web screen. Applicant should use form PTO/SB/420, which is available as a Portable Document Format (PDF) fillable form in EFS-Web and on the USPTO Web site.

(5) The petition to make special must be filed at least one day prior to the date that a first Office action (which may be an Office action containing only a restriction requirement) appears in the Patent Application Information Retrieval (PAIR) system. Applicant may check the status of the application using PAIR.

(6) The petition to make special must be accompanied by a request for early publication in compliance with 37 CFR 1.219 and the publication fee set forth in 37 CFR 1.18(d).

Privacy Act Statement

The **Privacy Act of 1974 (P.L. 93-579)** requires that you be given certain information in connection with your submission of the attached form related to a patent application or patent. Accordingly, pursuant to the requirements of the Act, please be advised that: (1) the general authority for the collection of this information is 35 U.S.C. 2(b)(2); (2) furnishing of the information solicited is voluntary; and (3) the principal purpose for which the information is used by the U.S. Patent and Trademark Office is to process and/or examine your submission related to a patent application or patent. If you do not furnish the requested information, the U.S. Patent and Trademark Office may not be able to process and/or examine your submission, which may result in termination of proceedings or abandonment of the application or expiration of the patent.

The information provided by you in this form will be subject to the following routine uses:

1. The information on this form will be treated confidentially to the extent allowed under the Freedom of Information Act (5 U.S.C. 552) and the Privacy Act (5 U.S.C 552a). Records from this system of records may be disclosed to the Department of Justice to determine whether disclosure of these records is required by the Freedom of Information Act.
2. A record from this system of records may be disclosed, as a routine use, in the course of presenting evidence to a court, magistrate, or administrative tribunal, including disclosures to opposing counsel in the course of settlement negotiations.
3. A record in this system of records may be disclosed, as a routine use, to a Member of Congress submitting a request involving an individual, to whom the record pertains, when the individual has requested assistance from the Member with respect to the subject matter of the record.
4. A record in this system of records may be disclosed, as a routine use, to a contractor of the Agency having need for the information in order to perform a contract. Recipients of information shall be required to comply with the requirements of the Privacy Act of 1974, as amended, pursuant to 5 U.S.C. 552a(m).
5. A record related to an International Application filed under the Patent Cooperation Treaty in this system of records may be disclosed, as a routine use, to the International Bureau of the World Intellectual Property Organization, pursuant to the Patent Cooperation Treaty.
6. A record in this system of records may be disclosed, as a routine use, to another federal agency for purposes of National Security review (35 U.S.C. 181) and for review pursuant to the Atomic Energy Act (42 U.S.C. 218(c)).
7. A record from this system of records may be disclosed, as a routine use, to the Administrator, General Services, or his/her designee, during an inspection of records conducted by GSA as part of that agency's responsibility to recommend improvements in records management practices and programs, under authority of 44 U.S.C. 2904 and 2906. Such disclosure shall be made in accordance with the GSA regulations governing inspection of records for this purpose, and any other relevant (*i.e.*, GSA or Commerce) directive. Such disclosure shall not be used to make determinations about individuals.
8. A record from this system of records may be disclosed, as a routine use, to the public after either publication of the application pursuant to 35 U.S.C. 122(b) or issuance of a patent pursuant to 35 U.S.C. 151. Further, a record may be disclosed, subject to the limitations of 37 CFR 1.14, as a routine use, to the public if the record was filed in an application which became abandoned or in which the proceedings were terminated and which application is referenced by either a published application, an application open to public inspection or an issued patent.
9. A record from this system of records may be disclosed, as a routine use, to a Federal, State, or local law enforcement agency, if the USPTO becomes aware of a violation or potential violation of law or regulation.

PATENT
Attorney Docket No.: 026335-003010US

I hereby certify that this correspondence is being filed Via EFS-Web with the USPTO on September 16, 2010.

IN THE UNITED STATES PATENT AND TRADEMARK OFFICE

In re application of:	Attorney Docket No.: 026335-003010US
Howard W.H. Lee	Confirmation No. 4890
Application No.: 12/476,174	Examiner:
Filed: June 1, 2009	Technology Center/Art Unit:
For: PROCESSING METHOD FOR CLEANING SULFUR ENTITIES OF CONTACT REGIONS	Petition to Make Special Under The Green Technology Pilot Program
Customer No.: 20350	Date: September 16, 2010

Commissioner for Patents
P.O. Box 1450
Alexandria, VA 22313-1450

Dear Sir:

Applicant hereby requests to participate in the Green Technology Pilot Program for the above identified application.

STATEMENTS OF SPECIAL STATUS FOR THE ELIGIBILITY REQUIREMENT

The application is a non-reissue, non-provisional utility application filed under 35 USC 111(a), filed before Dec. 8, 2009.

The application, after a submission of a preliminary amendment together with this petition, contains no more than three independent claims and twenty or fewer total claims, and no multiple dependent claims as well.

By filing this petition:

Applicant hereby requests early publication under 37 CFR 1.219 and the publication fee $300 set forth in CFR 1.18(d) accompanies this request.

Applicant believes the pending claims in the application being directed to a single invention that materially contributes to the discovery or development of renewable energy resources. The claimed invention relates to an improved process for the manufacture of high efficiency thin-film photovoltaic absorber for electric power generation.

By filing this petition: applicant hereby agrees to make an election without traverse in a telephonic interview and elect an invention that meets the eligibility requirements set forth in the notice titled "Pilot Program for Green Technologies Including Greenhouse Gas Reduction," as modified by the notice titled "Elimination of Classification Requirement in the Green Technology Pilot Program," each of which was published in the Federal Register, if the Office determines that the claims are not obviously directed to a single invention.

If the Office believes a telephone conference would expedite prosecution of this application, please telephone the undersigned at 650-906-0323.

Respectfully submitted,

/Richard T. Ogawa/

Richard T. Ogawa
Reg. No. 37,692

UNITED STATES PATENT AND TRADEMARK OFFICE

UNITED STATES DEPARTMENT OF COMMERCE
United States Patent and Trademark Office
Address: COMMISSIONER FOR PATENTS
P.O. Box 1450
Alexandria, Virginia 22313-1450
www.uspto.gov

APPLICATION NO.	FILING DATE	FIRST NAMED INVENTOR	ATTORNEY DOCKET NO.	CONFIRMATION NO.
12/476,174	06/01/2009	HOWARD W.H. LEE	026335-003010US	4890

20350 7590 10/01/2010
TOWNSEND AND TOWNSEND AND CREW, LLP
TWO EMBARCADERO CENTER
EIGHTH FLOOR
SAN FRANCISCO, CA 94111-3834

EXAMINER
HORNING, JOEL G

ART UNIT	PAPER NUMBER
1712	

MAIL DATE	DELIVERY MODE
10/01/2010	PAPER

Please find below and/or attached an Office communication concerning this application or proceeding.

The time period for reply, if any, is set in the attached communication.

UNITED STATES PATENT AND TRADEMARK OFFICE

Commissioner for Patents
United States Patent and Trademark Office
P.O. Box 1450
Alexandria, VA 22313-1450
www.uspto.gov

TOWNSEND AND TOWNSEND AND CREW, LLP
TWO EMBARCADERO CENTER
EIGHTH FLOOR
SAN FRANCISCO CA 94111-3834

OCT 01 2010

In re Application of	:	
Lee	:	DECISION ON PETITION
Application No. 12/476,174	:	TO MAKE SPECIAL UNDER
Filed: 6/1/2009	:	THE GREEN TECHNOLOGY
Attorney Docket No. **026335-003010US**	:	PILOT PROGRAM

This is a decision on the petition under 37 CFR 1.102, filed 9/16/2010, to make the above-identified application special under the pilot program for applications pertaining to Green Technologies as set forth 74 Federal Register Notice 64666 (December 8, 2009).

The petition is **GRANTED**.

A grantable petition to make an application special under 37 CFR 1.102 and the pilot program as set forth in 74 FR 64666 must be directed to a nonprovisional application filed under 35 USC 111(a) or be a national stage entry under 35 USC 371, exclusive of any reissue applications and be filed prior to the date of the notice; December 8, 2009.

In order to qualify for special status, the following requirements must be met. 1) The application must have no more than 3 independent claims and no more than 20 total claims. 2) The application must not contain any multiple dependent claims. 3) The petition must state the basis for seeking special status, i.e., the claimed invention either: A) materially enhances the quality of the environment or B) materially contributes to: i) the discovery or development of renewable energy resources, ii) the more efficient utilization and conservation of energy resources, or iii) greenhouse gas emission reduction. 4) If the disclosure is not clear on its face that the claimed invention materially contributes under category (A) or (B), the petition must be accompanied by a statement by the applicant, assignee, or an attorney/agent registered to practice before the Office explaining how the materiality standard is met. 5) A statement that applicant will agree to make an election without traverse in a telephonic interview if a restriction requirement is made by the examiner. 6) The petition to make special must be filed electronically. 7) The petition must be filed at least one day prior to the date that a first Office Action appears in the Patent Application Information Retrieval (PAIR) system. 8) The petition must be accompanied by a request for early publication in compliance with 37 CFR 1.219 and include the publication fee as set forth in 37 CFR 1.18(d).

The requirement for a fee for consideration of the petition to make special for applications pertaining to Green Technologies has been waived.

The instant petition complies with items 1 – 8 above. Accordingly, the above-identified application has been accorded "special" status.

Telephone inquires concerning this decision should be directed to Tom Dunn at 571-272-1171.

The application is being forwarded to the Technology Center Art Unit 1712 for action on the merits commensurate with this decision.

/Tom Dunn/

Tom Dunn
Quality Assurance Specialist
Technology Center 1700

UNITED STATES PATENT AND TRADEMARK OFFICE

Commissioner for Patents
United States Patent and Trademark Office
P.O. Box 1450
Alexandria, VA 22313-1450
www.uspto.gov

MINTZ, LEVIN, COHN, FERRIS, GLOVSKY AND POPEO, P.C
ONE FINANCIAL CENTER
BOSTON MA 02111

MAILED

AUG 05 2010

OFFICE OF PETITIONS

In re Application of	:	
Sekowski et al.	:	DECISION ON PETITION
Application No. 12/476,227	:	TO WITHDRAW
Filed: June 1, 2009	:	FROM RECORD
Attorney Docket No. 39615-503001US	:	

This is a decision on the Request to Withdraw as attorney or agent of record under 37 C.F.R. § 1.36(b), filed July 6, 2010.

The request is **NOT APPROVED**.

The Office will only accept correspondence address changes to the most current address information provided for the assignee of the entire interest *who properly became of record under 37 CFR 3.71*, or, if no assignee of the entire interest has properly been made of record, the most current address information provided for the first named inventor. 37 CFR 3.71(c) states:

> *An assignee becomes of record either in a national patent application or a reexamination proceeding by filing a statement in compliance with § 3.73(b) that is signed by a party who is authorized to act on behalf of the assignee.*

As there is no Statement under 37 CFR 3.73(b) in the instant application, the request cannot be granted. All future communications from the Office will be directed to above-listed address until otherwise properly notified by the applicant or a proper change of correspondence address have been submitted.

Telephone inquires concerning this decision should be directed to the undersigned at (571) 272-3206. All other inquires concerning either the examination or status of the application should be directed to the Technology Center.

Liana Walsh
Petitions Examiner
Office of Petitions

UNITED STATES PATENT AND TRADEMARK OFFICE

Commissioner for Patents
United States Patent and Trademark Office
P.O. Box 1450
Alexandria, VA 22313-1450
www.uspto.gov

MINTZ, LEVIN, COHN, FERRIS, GLOVSKY AND POPEO, P.C
ONE FINANCIAL CENTER
BOSTON MA 02111

MAILED
NOV 04 2011
OFFICE OF PETITIONS

In re Application of	:	
Sekowski, Marek	:	DECISION ON PETITION
Application No. 12/476,227	:	TO WITHDRAW
Filed: June 1, 2009	:	FROM RECORD
Attorney Docket No. 39615-503001US	:	

This is a decision on the Request to Withdraw as Attorney or Agent of Record under 37 C.F.R. § 1.36(b), filed October 14, 2011.

The request is **APPROVED**.

A grantable request to withdraw as attorney/agent of record must be signed by every attorney/agent seeking to withdraw or contain a clear indication that one attorney is signing on behalf of another/others. The Office will require the practitioner(s) to certify that he, she or they have: (1) given reasonable notice to the client, prior to the expiration of the reply period, which the practitioner(s) intends to withdraw from employment; (2) delivered to the client or a duly authorized representative of the client all papers and property (including funds) to which the client is entitled; and (3) notified the client of any replies that may be due and the time frame within which the client must respond, pursuant to 37 CFR 10.40 (c).

The request was signed by James P. Cleary, Esq., on behalf of all attorneys/agents of record who are associated with Customer Number 64046. All attorneys/agents associated with Customer Number 64046 have been withdrawn. Applicant is reminded that there is no attorney of record at this time.

All future correspondence will be directed to the first-named inventor, Marek Sekowski, at the address indicated below.

Telephone inquires concerning this decision should be directed to the undersigned at (571) 272-3206. All other inquires concerning either the examination or status of the application should be directed to the Technology Center.

/Liana Walsh/
Liana Walsh
Petitions Examiner
Office of Petitions

cc: MAREK SEKOWSKI
CARLSBAD CA 92008
1819 ASTON AVENUE, #101

SPE RESPONSE FOR CERTIFICATE OF CORRECTION

Paper No.: _____

DATE : 02/15/11

TO SPE OF : ART UNIT: 1761 Attn: PYON HAROLD Y (SPE)

SUBJECT : Request for Certificate of Correction for Appl. No.: 12/476273 Patent No.: 7851532

CofC Mailroom date: 02/11/11

Please respond to this request for a certificate of correction within 7 days.

FOR IFW FILES:

Please review the requested changes/corrections as shown in the **COCIN** document(s) in the IFW application image. No new matter should be introduced, nor should the scope or meaning of the claims be changed.

Please complete the response (see below) and forward the completed response to scanning using document code **COCX**.

FOR PAPER FILES:

Please review the requested changes/corrections as shown in the attached certificate of correction. Please complete this form (see below) and forward it with the file to:

Certificates of Correction Branch (CofC)
Randolph Square – 9D10-A
Palm Location 7580

Tasneem Siddiqui
Certificates of Correction Branch
703-756-1593 or 703-756-1814

Thank You For Your Assistance

The request for issuing the above-identified correction(s) is hereby:
Note your decision on the appropriate box.

X **Approved**	**All** changes apply.
☐ **Approved in Part**	Specify below which changes **do not** apply.
☐ **Denied**	State the reasons for denial below.

Comments: _____

_____

/Harold Y. Pyon/ _____
SPE **Art Unit**
1761

UNITED STATES PATENT AND TRADEMARK OFFICE

Commissioner for Patents
United States Patent and Trademark Office
P.O. Box 1450
Alexandria, VA 22313-1450
www.uspto.gov

NIXON PEABODY, LLP
401 9TH STREET, NW
SUITE 900
WASHINGTON, DC 20004-2128

MAILED

OCT 08 2010

OFFICE OF PETITIONS

In re Application of	:	
Nicholas GADACZ	:	
Application No. 12/476,398	:	DECISION ON PETITION
Filed: June 2, 2009	:	TO WITHDRAW
Attorney Docket No. 002566-055000	:	FROM RECORD
	:	

This is a decision on the Request to Withdraw as attorney or agent of record under 37 C.F.R. § 1.36(b), filed September 7, 2010.

The request is **NOT APPROVED because it is moot.**

A review of the file record indicates that the power of attorney to Jeffrey L. Costellia and the attorneys associated with Customer No. 22204, has been revoked by the assignee of the patent application on September 16, 2010. Accordingly, the request to withdraw under 37 C.F.R. § 1.36(b) is moot.

Telephone inquires concerning this decision should be directed to undersigned at 571-272- 6735.

/DCG/
/Diane C. Goodwyn/
Petitions Examiner
Office of Petitions

Cc: CBS INTERACTIVE INC.
235 SECOND STREET
SAN FRANCISCO CA 94105