SPE RESPONSE FOR CERTIFICATE OF CORRECTION

Paper No.:20120110

DATE :

TO SPE OF : ART UNIT

SUBJECT : Request for Certificate of Correction on Patent No.:

A response is requested with respect to the accompanying request for a certificate of correction.

Please complete this form and return with file, within **7** days to:
Certificates of Correction Branch - ST (South Tower) 9A22
Palm location **7590** - Tel. No. (703) 305-8309

With respect to the change(s) requested, correcting Office and/or Applicant's errors, should the patent read as shown in the certificate of correction? No new matter should be introduced, nor should the scope or meaning of the claims be changed.

Thank You For Your Assistance **Certificates of Correction Branch**

The request for issuing the above-identified correction(s) is hereby:

Note your decision on the appropriated box.

☒ **Approved** All changes apply.

☐ **Approved in Part** Specify below which changes **do not** apply.

☐ **Denied** State the reasons for denial below.

Comments:

/CHARLES KYLE/
Supervisory Patent Examiner.Art Unit 3695

Please Enter.
TTH
1/10/12

IN THE UNITED STATES PATENT AND TRADEMARK OFFICE

In re Patent Application of: Glinberg *et al.*	Customer No.: 12684
Patent No.: 8,069,109	Docket No.: 4672-09751CUS
Confirmation No.: 1984	Art Unit: 3695
Issued: November 29, 2011	Examiner: Thu Thao Havan
For: System and Method for Using Diversification Spreading for Risk Offset	

REQUEST FOR CERTIFICATE OF CORRECTION

Certificate of Correction Branch
Commissioner for Patents
P.O. Box 1450
Alexandria, VA 22313-1450

Dear Sir:

The following Patent Office errors have been found on the official patent issued November 29, 2011. A Certificate of Correction is respectfully requested.

On page 1 of the patent:

Please add the following sentence after the paragraph in the "Notice" section: --This patent is subject to a Terminal Disclaimer--.

Applicants, prior to the Notice of Allowance, filed a Terminal Disclaimer on July 5, 2011, which disclaimed the terminal portion of the present patent term that extends beyond the expiration of U.S. Patent No. 7,593,978. Applicants subsequently submitted a supplemental terminal disclaimer on November 28, 2011, to address changes in recent Patent Office practice.

A Certificate of Correction is submitted herewith.

Dated: December 15, 2011

Respectfully submitted,

By /Matthew T. Ridsdale/

Matthew T. Ridsdale
Registration No.: 56,832
Lempia Summerfield Katz LLC
One North LaSalle Street, Suite 2900
Chicago, IL 60602
(312) 291-0860
Attorney for Applicant

PTO/SB/44 (09-07)
Approved for use through 08/31/2013. OMB 0651-0033
U.S. Patent and Trademark Office; U.S. DEPARTMENT OF COMMERCE
Under the Paperwork Reduction Act of 1995, no persons are required to respond to a collection of information unless it displays a valid OMB control number.
(Also Form PTO-1050)

UNITED STATES PATENT AND TRADEMARK OFFICE
CERTIFICATE OF CORRECTION

PATENT NO. : 8,069,109

APPLICATION NO.: 12/540,765

ISSUE DATE : November 29, 2011

INVENTOR(S) : Dmitriy Glinberg, Edward Gogol, Dale A. Michaels

It is certified that an error appears or errors appear in the above-identified patent and that said Letters Patent is hereby corrected as shown below:

On page 1 of the patent, please add the following sentence after the paragraph in the "Notice" section: --This patent is subject to a Terminal Disclaimer--.

MAILING ADDRESS OF SENDER (Please do not use customer number below):

Lempia Summerfield Katz LLC
One North LaSalle Street
Chicago, IL 60602

This collection of information is required by 37 CFR 1.322, 1.323, and 1.324. The information is required to obtain or retain a benefit by the public which is to file (and by the USPTO to process) an application. Confidentiality is governed by 35 U.S.C. 122 and 37 CFR 1.14. This collection is estimated to take 1.0 hour to complete, including gathering, preparing, and submitting the completed application form to the USPTO. Time will vary depending upon the individual case. Any comments on the amount of time you require to complete this form and/or suggestions for reducing this burden, should be sent to the Chief Information Officer, U.S. Patent and Trademark Office, U.S. Department of Commerce, P.O. Box 1450, Alexandria, VA 22313-1450. DO NOT SEND FEES OR COMPLETED FORMS TO THIS ADDRESS. **SEND TO: Attention Certificate of Corrections Branch, Commissioner for Patents, P.O. Box 1450, Alexandria, VA 22313-1450.**

If you need assistance in completing the form, call 1-800-PTO-9199 and select option 2.

SPE RESPONSE FOR CERTIFICATE OF CORRECTION

Paper No.: _____

DATE : January 9, 2012

TO SPE OF : ART UNIT 3695 SPE Charles R. Kyle.

SUBJECT : Request for Certificate of Correction for Appl. No.: 12/540,765 Patent No.: 8,069,109 B2

Please respond to this request for a certificate of correction within 7 days.

FOR IFW FILES:

Please review the requested changes/corrections as shown in the **COCIN** document(s) in the IFW application image. No new matter should be introduced, nor should the scope or meaning of the claims be changed.

Please complete the response (see below) and forward the completed response to scanning using document code **COCX**.

FOR PAPER FILES:

Please review the requested changes/corrections as shown in the attached certificate of correction. Please complete this form (see below) and forward it with the file to:

Certificates of Correction Branch (CofC)
Randolph Square Building
2800 South Randolph Street
Arlington, VA 22206

Should the sentence "This patent is subject to a terminal disclaimer" after the paragraph in the Notice section on the title page of patent **as requested by applicant?**
See COCIN dated 12-15-2011

Antonio Johnson

Certificates of Correction Branch
(571)272-0483 Fax – (571)270-9846

Thank You For Your Assistance

The request for issuing the above-identified correction(s) is hereby:
Note your decision on the appropriate box.

- [x] **Approved** — **All** changes apply.
- [ ] **Approved in Part** — Specify below which changes **do not** apply.
- [ ] **Denied** — State the reasons for denial below.

Comments: _____

_____

_____

_____ **SPE** KH **Art Unit** 3695

UNITED STATES PATENT AND TRADEMARK OFFICE

UNITED STATES DEPARTMENT OF COMMERCE
United States Patent and Trademark Office
Address: COMMISSIONER FOR PATENTS
P.O. Box 1450
Alexandria, Virginia 22313-1450
www.uspto.gov

APPLICATION NO.	FILING DATE	FIRST NAMED INVENTOR	ATTORNEY DOCKET NO.	CONFIRMATION NO.
12/540,813	08/13/2009	Kazuchika TASHIMA	346982US26	2062

22850 7590 10/25/2010
OBLON, SPIVAK, MCCLELLAND MAIER & NEUSTADT, L.L.P.
1940 DUKE STREET
ALEXANDRIA, VA 22314

EXAMINER
KWON, JOHN

ART UNIT	PAPER NUMBER
3747	

NOTIFICATION DATE	DELIVERY MODE
10/25/2010	ELECTRONIC

Please find below and/or attached an Office communication concerning this application or proceeding.

The time period for reply, if any, is set in the attached communication.

Notice of the Office communication was sent electronically on above-indicated "Notification Date" to the following e-mail address(es):

patentdocket@oblon.com
oblonpat@oblon.com
jgardner@oblon.com

UNITED STATES PATENT AND TRADEMARK OFFICE

Commissioner for Patents
United States Patent and Trademark Office
P.O. Box 1450
Alexandria, VA 22313-1450
www.uspto.gov

OBLON, SPIVAK, MCCLELLAND MAIER & NEUSTADT, L.L.P.
1940 DUKE STREET
ALEXANDRIA VA 22314

In re Application of: TASHIMA, KAZUCHIKA et al Serial No.: 12/540,813 Filed: August 13, 2009 Docket: 346982US26 Title: FUEL SUPPLY DEVICE FOR FLEXIBLE-FUEL INTERNAL COMBUSTION ENGINE	DECISION ON REQUEST TO PARTICIPATE IN PATENT PROSECUTION HIGHWAY (PPH) AND PETITION TO MAKE SPECIAL UNDER 37 CFR 1.102(d)

This is a decision on the request to participate in the Patent Prosecution Highway (PPH) program and the petition under 37 CFR 1.102(d), filed October 21, 2010, to make the above-identified application special.

The request and petition are **GRANTED**.

A grantable request to participate in the PPH program and petition to make special require:

(1) The U.S. application must validly claim priority under 35 U.S.C. 119(a) to one or more corresponding application(s) filed in the JPO or to a PCT application that does not contain any priority claim, or the U.S. application must be a national stage entry of a PCT application that does not contain any priority claim;
(2) Applicant must submit a copy of the allowable/patentable claim(s) from the JPO application(s) along with an English translation thereof and a statement that the English translation is accurate;
(3) All the claims in the U.S. application must sufficiently correspond or be amended to sufficiently correspond to the allowable/patentable claim(s) in the JPO application(s);
(4) Examination of the U.S. application has not begun;
(5) Applicant must submit a copy of all the office actions from each of the JPO application(s) containing the allowable/patentable claim(s) along with an English translation thereof and a statement that the English translation is accurate; and
(6) Applicant must submit an IDS listing the documents cited by the JPO examiner in the JPO office action along with copies of documents except U.S. patents or U.S. patent application publications.

In light of the petition being properly submitted, the request to participate in the PPH program and the petition comply with the above requirements. Accordingly, the above-identified application has been accorded "special" status.

The applicant is encouraged to cite and submit all relevant prior art references, if any, to facilitate examination in this application.

The application is being forwarded and docketed to an examiner for action on the merits commensurate with this decision.

Telephone inquiries concerning this decision should be directed to Henry C. Yuen at 571-272-4856. All other inquiries concerning the examination or status of the application should be directed to Steve Cronin, the SPE of Art Unit 3747, and 571-272-4536 for Class 701/109 and also accessible in the PAIR system at http://www.uspto.gov/ebc.index.html.

Petition is **granted**.

/Henry C. Yuen/

Henry C. Yuen, Special Programs Examiner
Technology Center 3700 – Mechanical Engineering,
Manufacturing and Products
571-272-4856

PTO/SB/20PCT-KR (06-10)
Approved for use through 01/31/2012. OMB 0651-0058
U.S. Patent and Trademark Office; U. S. DEPARTMENT OF COMMERCE
Under the Paperwork Reduction Act of 1995, no persons are required to respond to a collection of information unless it displays a valid OMB control number.

REQUEST FOR PARTICIPATION IN THE PATENT COOPERATION TREATY - PATENT PROSECUTION HIGHWAY (PCT-PPH) PILOT PROGRAM BETWEEN THE KOREAN INTELLECTUAL PROPERTY OFFICE (KIPO) AND THE USPTO

Application No:	12/540,847	Filing date:	8/13/2009
First Named Inventor:	Marvin Keller Wingo		
Title of the Invention:	Crack Resistant Coating and Method of Applying Crack Resistant Coating		

THIS REQUEST FOR PARTICIPATION IN THE PCT-PPH PILOT PROGRAM ALONG WITH THE REQUIRED DOCUMENTS MUST BE SUBMITTED VIA EFS-WEB. INFORMATION REGARDING EFS-WEB IS AVAILABLE AT HTTP://WWW.USPTO.GOV/EBC/EFS_HELP.HTML

APPLICANT HEREBY REQUESTS PARTICIPATION IN THE PCT-PPH PROGRAM AND PETITIONS TO MAKE THE ABOVE-IDENTIFIED APPLICATION SPECIAL UNDER THE PCT-PPH PROGRAM.

The above-identified application is (1) a national stage entry of the corresponding PCT application, or (2) a national stage entry of another PCT application which claims priority to the corresponding PCT application, or (3) a national application that claims domestic/ foreign priority to the corresponding PCT application, or (4) a national application which forms the basis for the priority claim in the corresponding PCT application, or (5) a continuing application of a U.S. application that satisfies one of (1) to (4) above, or (6) a U.S. application that claims domestic benefit to a U.S. provisional application which forms the basis for the priority claim in the corresponding PCT application.

The corresponding PCT application number(s) is/are: PCT/US2010/033533

The international filing date of the corresponding PCT application(s) is/are: 04 May 2010

I. List of Required Documents:

a. **A copy of the latest international work product (WO/ISA, WO/IPEA, or IPER) in the above–identified corresponding PCT application(s)**

- [x] Is attached.
- [ ] Is not attached because the document is already in the U.S. application.

b. **A copy of all claims which were indicated as having novelty, inventive step and industrial applicability in the above-identified corresponding PCT application(s).**

- [ ] Is attached.
- [x] Is not attached because the document is already in the U.S. application.

c. **English translations of the documents in a. and b. above are attached (if the documents are not in the English language). A statement that the English translation is accurate is attached for the document in b. above.**

This collection of information is required by 35 U.S.C. 119, 37 CFR 1.55, and 37 CFR 1.102(d). The information is required to obtain or retain a benefit by the public, which is to file (and by the USPTO to process) an application. Confidentiality is governed by 35 U.S.C. 122 and 37 CFR 1.11 and 1.14. This collection is estimated to take 2 hours to complete, including gathering, preparing, and submitting the completed application form to the USPTO. Time will vary depending upon the individual case. Any comments on the amount of time you require to complete this form and/or suggestions for reducing this burden should be sent to the Chief Information Officer, U.S. Patent and Trademark Office, U.S. Department of Commerce, P.O. Box 1450, Alexandria, VA 22313-1450. DO NOT SEND FEES OR COMPLETED FORMS TO THIS ADDRESS.

Approved for use through 01/31/2012. OMB 0651-0058
U.S.Patent and Trademark Office; U.S. DEPARTMENT OF COMMERCE
Under the Paperwork Reduction Act of 1995, no persons are required to respond to a collection of information unless it displays a valid OMB control number.

REQUEST FOR PARTICIPATION IN THE PCT-PPH PILOT PROGRAM BETWEEN THE KIPO AND THE USPTO

(continued)

Application No.:	12/540,847
First Named Inventor:	Marvin Keller Wingo

d. **(1) An information disclosure statement listing the documents cited in the international work products (ISR, WO/ISA, WO/IPEA, IPER) of the corresponding PCT application.**

- [✔] Is attached
- [ ] Has already been filed in the above-identified U.S. application on _____

(2) Copies of all documents (except) for U.S. patents or U.S. patent application publications)

- [✔] Are attached.
- [ ] Have already been filed in the above-identified U.S. application on _____

II. Claims Correspondence Table:

Claims in US Application	Patentable Claims in the corresponding PCT Application	Explanation regarding the correspondence
1 - 36	1 - 36	All claims in the US Application are identical to the claims in the PCT Application

III. All the claims in the US application sufficiently correspond to the patentable claims in the corresponding PCT application.

Signature	Date January 7, 2010
Name (Print/Typed) Cassandra L. Wilkinson	Registration Number 58,879

Privacy Act Statement

The **Privacy Act of 1974 (P.L. 93-579)** requires that you be given certain information in connection with your submission of the attached form related to a patent application or patent. Accordingly, pursuant to the requirements of the Act, please be advised that: (1) the general authority for the collection of this information is 35 U.S.C. 2(b)(2); (2) furnishing of the information solicited is voluntary; and (3) the principal purpose for which the information is used by the U.S. Patent and Trademark Office is to process and/or examine your submission related to a patent application or patent. If you do not furnish the requested information, the U.S. Patent and Trademark Office may not be able to process and/or examine your submission, which may result in termination of proceedings or abandonment of the application or expiration of the patent.

The information provided by you in this form will be subject to the following routine uses:

1. The information on this form will be treated confidentially to the extent allowed under the Freedom of Information Act (5 U.S.C. 552) and the Privacy Act (5 U.S.C 552a). Records from this system of records may be disclosed to the Department of Justice to determine whether disclosure of these records is required by the Freedom of Information Act.
2. A record from this system of records may be disclosed, as a routine use, in the course of presenting evidence to a court, magistrate, or administrative tribunal, including disclosures to opposing counsel in the course of settlement negotiations.
3. A record in this system of records may be disclosed, as a routine use, to a Member of Congress submitting a request involving an individual, to whom the record pertains, when the individual has requested assistance from the Member with respect to the subject matter of the record.
4. A record in this system of records may be disclosed, as a routine use, to a contractor of the Agency having need for the information in order to perform a contract. Recipients of information shall be required to comply with the requirements of the Privacy Act of 1974, as amended, pursuant to 5 U.S.C. 552a(m).
5. A record related to an International Application filed under the Patent Cooperation Treaty in this system of records may be disclosed, as a routine use, to the International Bureau of the World Intellectual Property Organization, pursuant to the Patent Cooperation Treaty.
6. A record in this system of records may be disclosed, as a routine use, to another federal agency for purposes of National Security review (35 U.S.C. 181) and for review pursuant to the Atomic Energy Act (42 U.S.C. 218(c)).
7. A record from this system of records may be disclosed, as a routine use, to the Administrator, General Services, or his/her designee, during an inspection of records conducted by GSA as part of that agency's responsibility to recommend improvements in records management practices and programs, under authority of 44 U.S.C. 2904 and 2906. Such disclosure shall be made in accordance with the GSA regulations governing inspection of records for this purpose, and any other relevant (*i.e.*, GSA or Commerce) directive. Such disclosure shall not be used to make determinations about individuals.
8. A record from this system of records may be disclosed, as a routine use, to the public after either publication of the application pursuant to 35 U.S.C. 122(b) or issuance of a patent pursuant to 35 U.S.C. 151. Further, a record may be disclosed, subject to the limitations of 37 CFR 1.14, as a routine use, to the public if the record was filed in an application which became abandoned or in which the proceedings were terminated and which application is referenced by either a published application, an application open to public inspection or an issued patent.
9. A record from this system of records may be disclosed, as a routine use, to a Federal, State, or local law enforcement agency, if the USPTO becomes aware of a violation or potential violation of law or regulation.

UNITED STATES PATENT AND TRADEMARK OFFICE

UNITED STATES DEPARTMENT OF COMMERCE
United States Patent and Trademark Office
Address: COMMISSIONER FOR PATENTS
P.O. Box 1450
Alexandria, Virginia 22313-1450
www.uspto.gov

APPLICATION NO.	FILING DATE	FIRST NAMED INVENTOR	ATTORNEY DOCKET NO.	CONFIRMATION NO.
12/540,847	08/13/2009	Marvin Keller Exline	ROA524-00/08397	2128

24118 7590 01/31/2011
HEAD, JOHNSON & KACHIGIAN
228 W 17TH PLACE
TULSA, OK 74119

EXAMINER
MELLOTT, JAMES M

ART UNIT	PAPER NUMBER
1712	

MAIL DATE	DELIVERY MODE
01/31/2011	PAPER

Please find below and/or attached an Office communication concerning this application or proceeding.

The time period for reply, if any, is set in the attached communication.

UNITED STATES PATENT AND TRADEMARK OFFICE

Commissioner for Patents
United States Patent and Trademark Office
P.O. Box 1450
Alexandria, VA 22313-1450
www.uspto.gov

BC

January 31, 2011

In re application of Marvin K. Exline et al.. Serial No. 12/540,847 Filed: August 13, 2009 For: CRACK RESISTANT COATING AND METHOD OF APPLYING CRACK RESISTANT COATING	: : : : : : :	DECISION ON REQUEST TO PARTICIPATE IN PATENT PROSECUTION HIGHWAY PROGRAM AND PETITION TO MAKE SPECIAL UNDER 37 CFR 1.102(a)

This is a decision on the request for reconsideration to participate in the PCT Patent Prosecution Highway (PCT-PPH) pilot program and the petition under 37 CFR 1.102(a), filed January 06, 2011, to make the above-identified application special.

The request and petition are **GRANTED**.

A grantable request to participate in the PCT-PPH pilot program and petition to make special require:

(1) The U.S. application must disclose an eligible relationship to one or more PCT applications where the ISA or IPEA are the JPO, EPO, or USPTO;

(2) At least one claim in the PCT application has novelty, inventive step, and industrial applicability and must be free of any observations in Box VIII in the latest work product in the international stage or applicant must identify and explain why the claim(s) is/are not subject to the observation in Box VIII;

(3) Applicant must submit a copy of the claim(s) from the PCT application(s) that have novelty, inventive step, and industrial applicability along with an English translation thereof and a statement that the English translation is accurate, if the claims are not in the English language;

(4) All the claims in the U.S. application must sufficiently correspond or be amended to sufficiently correspond to the claim(s) that have novelty, inventive step, and industrial applicability in the PCT application(s);

(5) Examination of the U.S. application has not begun;

(6) Applicant must submit a copy of the latest international work product from the PCT application indicating that the claim(s) have novelty, inventive step, and industrial applicability along with an English translation thereof if the latest international work

product is not in the English language; and

(7) Applicant must submit an IDS listing the documents cited by the PCT examiner in the international work product along with copies of documents except U.S. patents or U.S. patent application publications.

The request to participate in the PPH program and petition comply with the above requirements. Accordingly, the above-identified application has been accorded "special" status.

The application is being forwarded to the examiner for action on the merits commensurate with this decision.

Any inquiry regarding this decision should be directed to Blaine Copenheaver, Quality Assurance Specialist, at (571) 272-1156.

All other inquiries concerning the examination or status of the application is accessible in the PAIR system at http://www.uspto.gov/ebc/index.html.

/Blaine Copenheaver/

Blaine Copenheaver
Quality Assurance Specialist
Technology Center 1700

UNITED STATES PATENT AND TRADEMARK OFFICE

Commissioner for Patents
United States Patent and Trademark Office
P.O. Box 1450
Alexandria, VA 22313-1450
www.uspto.gov

HULSEY IP INTELLECTUAL PROPERTY LAWYERS, P.C.
919 CONGRESS AVENUE, SUITE 919
AUSTIN, TX 78701

MAILED
NOV 29 2010
OFFICE OF PETITIONS

Applicant: McAfee, et al.
Appl. No.: 12/540,924
Filing Date: August 13, 2009
Title: METHOD AND APPARATUS FOR PROGRAMMABLE ROBOTIC TOTARY MILL CUTTING OF MULTIPLE NESTED TUBULARS
Attorney Docket No.: ABTA008US1
Pub. No.: US 2010/0038080 A1
Pub. Date: February 18, 2010

This is a decision on the request for a corrected patent application publication under 37 CFR 1.221(b), received on March 12, 2010, for the above-identified application

The request is DISMISSED.

Applicant requests that the application be republished because the patent application publication contains a material error on the front page of the application wherein the assignee's name is incorrect.

37 CFR 1.221 (b) is applicable "only when the Office makes a material mistake which is apparent from Office records.... Any request for a corrected publication or revised patent application publication other than provided as provided in paragraph (a) of this section must be filed **within two months** from the date of the patent application publication. **This period is not extendable**." A material mistake must affect the public's ability to appreciate the technical disclosure of the patent application publication, to determine the scope of the patent application publication, or to determine the scope of the provisional rights that an applicant may seek to enforce upon issuance of a patent. [1]

The error on the front page of the published patent application wherein the assignee's name "Completion Technologies, Inc." is incorrectly listed as "WIDES A/S" is not a material Office error under 37 CFR 1.221(b). The misprinting of the assignee's name does not affect the understanding of the application. The error in assignment information is not a material mistake because it does not affect the public's ability to appreciate the technical disclosure of the patent application publication, to determine the scope of the patent application publication or to determine the scope of the provisional rights that an applicant may seek to enforce upon issuance of a patent. See MPEP 1130. Applicant should not file requests for corrected publication when a publication includes errors in the assignee's name or assignment information. See MPEP 1130.

[1] Changes to Implement Eighteen-Month Publication of Patent Applications, 65 FR 57023, 57038 (Sept. 20, 2000), 1239, Off. Gaz. Pat. Office Notices 63, 75 (Oct. 10, 2000) (final rule).

On August 28, 2009, and November 12, 2000, a Filing Receipt was mailed by the Office, which incorrectly listed the assignee's name. To avoid this type of problem in the future, applicant's representative should correct the error and make a request for a corrected filing receipt prior to export of the application to the publisher and publication of the application. The assignee's name was not listed in the Application Data Sheet (ADS) or the transmittal letter.

The applicant is advised that a "request for republication of an application previously published" may be filed under 37 CFR 1.221(a). Such a request for republication "must include a copy of the application compliance with the Office's electronic filing system requirements and be accompanied by the publication fee set forth in § 1.18(d) and the processing fee set forth in § 1.17(i)." If the request for republication does not comply with the electronic filing system requirements, the republication will not take place and the publication fee set forth in § 1.18(d) will be refunded. The processing fee will be retained.

A guide for filing a request for a Pre-Grant Publication, such as a request for republication, may be found on the link below:

http://www.uspto.gov/patents/process/file/efs/guidance/index.jsp

http://www.uspto.gov/ebc/portal/efs/pgpub_quickstart.pdf

Any request for republication under 37 CFR 1.221(a), must be submitted via the EFS system, as a "Pre-Grant Publication."

Inquiries relating to this matter may be directed to Mark Polutta at (571) 272-7709.

Mark Polutta
Senior Legal Advisor
Office of Patent Legal Administration
Office of the Deputy Commissioner
for Patent Examination Policy

UNITED STATES PATENT AND TRADEMARK OFFICE

Commissioner for Patents
United States Patent and Trademark Office
P.O. Box 1450
Alexandria, VA 22313-1450
www.uspto.gov

In re Application of
William H. Eby

Application No. 12540967

Filed: August 13,2009

Attorney Docket No. 1421-391

:DECISION ON PETITION TO MAKE SPECIAL
:UNDER 37 CFR 1.102(c)(1)

This is a decision on the electronic petition under 37 CFR 1.102 (c)(1), filed 09-MAY-2011 to make the above-identified application special based on applicant's age as set forth in MPEP § 708.02, Section IV.

The petition is **GRANTED**.

A grantable petition to make an application special under 37 CFR 1.102(c)(1), MPEP § 708.02, Section IV: Applicant's Age must include a statement by applicant or a registered practitioner having evidence that applicant is at least 65 years of age. No fee is required.

Accordingly, the above-identified application has been accorded "special" status and will be taken up for action by the examiner upon the completion of all pre-examination processing.

Telephone inquiries concerning this electronic decision should be directed to the Electronic Business Center at 866-217-9197.

All other inquiries concerning either the examination or status of the application should be directed to the Technology Center.

Doc code : PET.OP.AGE
Description : Petition to make special based on Age/Health

PTO/SB/130 (07-09)
Approved for use through 07/31/2012. OMB 0651- 0031
U.S. Patent and Trademark Office; U.S. DEPARTMENT OF COMMERCE
Under the Paperwork Reduction Act of 1995, no persons are required to respond to a collection of information unless it contains a valid OMB control number

PETITION TO MAKE SPECIAL BASED ON AGE FOR ADVANCEMENT OF EXAMINATION UNDER 37 CFR 1.102(c)(1)

Application Information

Application Number	12/540,967	Confirmation Number	2384	Filing Date	2009-08-13
Attorney Docket Number (optional)	1421-391	Art Unit	1638	Examiner	Cathy Kingdon Worley
First Named Inventor	WILLIAM H. EBY				
Title of Invention	SOYBEAN CULTIVAR 83181015				

Attention: Office of Petitions
An application may be made special for advancement of examination upon filing of a petition showing that the applicant is 65 years of age, or more. No fee is required with such a petition. See 37 CFR 1.102(c)(1) and MPEP 708.02 (IV).

APPLICANT HEREBY PETITIONS TO MAKE SPECIAL FOR ADVANCEMENT OF EXAMINATION IN THIS APPLICATION UNDER 37 CFR 1.102(c)(1) and MPEP 708.02 (IV) ON THE BASIS OF THE APPLICANT'S AGE.

A grantable petition requires one of the following items:
(1) Statement by one named inventor in the application that he/she is 65 years of age, or more; or
(2) Certification by a registered attorney/agent having evidence such as a birth certificate, passport, driver's license, etc. showing one named inventor in the application is 65 years of age, or more.

Name of Inventor who is 65 years of age, or older

Given Name	Middle Name	Family Name	Suffix
William	H.	EBY	

A signature of the applicant or representative is required in accordance with 37 CFR 1.33 and 10.18.
Please see 37 CFR 1.4(d) for the format of the signature.

Select (1) or (2) :

○ (1) I am an inventor in this application and I am 65 years of age, or more.

● (2) I am an attorney or agent registered to practice before the Patent and Trademark Office, and I certify that I am in possession of evidence, and will retain such in the application file record, showing that the inventor listed above is 65 years of age, or more.

Signature	/Robert J. Jondle/	Date (YYYY-MM-DD)	2011-05-09
Name	Robert J. Jondle	Registration Number	33915

PTO/SB/130 (07-09)
Approved for use through 07/31/2012. OMB 0651- 0031
U.S. Patent and Trademark Office; U.S. DEPARTMENT OF COMMERCE
Under the Paperwork Reduction Act of 1995, no persons are required to respond to a collection of information unless it contains a valid OMB control number

Privacy Act Statement

The Privacy Act of 1974 (P.L. 93-579) requires that you be given certain information in connection with your submission of the attached form related to a patent application or patent. Accordingly, pursuant to the requirements of the Act, please be advised that: (1) the general authority for the collection of this information is 35 U.S.C. 2(b)(2); (2) furnishing of the information solicited is voluntary; and (3) the principal purpose for which the information is used by the U.S. Patent and Trademark Office is to process and/or examine your submission related to a patent application or patent. If you do not furnish the requested information, the U.S. Patent and Trademark Office may not be able to process and/or examine your submission, which may result in termination of proceedings or abandonment of the application or expiration of the patent.

The information provided by you in this form will be subject to the following routine uses:

1. The information on this form will be treated confidentially to the extent allowed under the Freedom of Information Act (5 U.S.C. 552) and the Privacy Act (5 U.S.C. 552a). Records from this system of records may be disclosed to the Department of Justice to determine whether the Fr eedom of Information Act requires disclosure of these records.

2. A record from this system of records may be disclosed, as a routine use, in the course of presenting evidence to a court, magistrate, or administrative tribunal, including disclosures to opposing counsel in the course of settlement negotiations.

3. A record in this system of records may be disclosed, as a routine use, to a Member of Congress submitting a request involving an individual, to whom the record pertains, when the individual has requested assistance from the Member with respect to the subject matter of the record.

4. A record in this system of records may be disclosed, as a routine use, to a contractor of the Agency having need for the information in order to perform a contract. Recipients of information shall be required to comply with the requirements of the Privacy Act of 1974, as amended, pursuant to 5 U.S.C. 552a(m).

5. A record related to an International Application filed under the Patent Cooperation Treaty in this system of records may be disclosed, as a routine use, to the International Bureau of the World Intellectual Property Organization, pursuant to the Patent Cooperation Treaty.

6. A record in this system of records may be disclosed, as a routine use, to another federal agency for purposes of National Security review (35 U.S.C. 181) and for review pursuant to the Atomic Energy Act (42 U.S.C. 218(c)).

7. A record from this system of records may be disclosed, as a routine use, to the Administrator, General Services, or his/her designee, during an inspection of records conducted by GSA as part of that agency's responsibility to recommend improvements in records management practices and programs, under authority of 44 U.S.C. 2904 and 2906. Such disclosure shall be made in accordance with the GSA regulations governing inspection of records for this purpose, and any other relevant (i.e., GSA or Commerce) directive. Such disclosure shall not be used to make determinations about indivi duals.

8. A record from this system of records may be disclosed, as a routine use, to the public after either publication of the application pursuant to 35 U.S.C. 122(b) or issuance of a patent pursuant to 35 U.S.C. 151. Further, a record may be disclosed, subject to the limitations of 37 CFR 1.14, as a routine use, to the public if the record was filed in an application which became abandoned or in which the proceedings were terminated and which application is referenced by either a published application, an application open to public inspections or an issued patent.

9. A record from this system of records may be disclosed, as a routine use, to a Federal, State, or local law enforcement agency, if the USPTO becomes aware of a violation or potential violation of law or regulation.

UNITED STATES PATENT AND TRADEMARK OFFICE

UNITED STATES DEPARTMENT OF COMMERCE
United States Patent and Trademark Office
Address: COMMISSIONER FOR PATENTS
P.O. Box 1450
Alexandria, Virginia 22313-1450
www.uspto.gov

APPLICATION NO.	FILING DATE	FIRST NAMED INVENTOR	ATTORNEY DOCKET NO.	CONFIRMATION NO.
12/540,967	08/13/2009	William H. Eby	1421-391	2384

32905 7590 09/02/2011
JONDLE & ASSOCIATES, P.C.
858 HAPPY CANYON ROAD, SUITE 230
CASTLE ROCK, CO 80108

EXAMINER
WORLEY, CATHY KINGDON

ART UNIT	PAPER NUMBER
1638	

NOTIFICATION DATE	DELIVERY MODE
09/02/2011	ELECTRONIC

Please find below and/or attached an Office communication concerning this application or proceeding.

The time period for reply, if any, is set in the attached communication.

Notice of the Office communication was sent electronically on above-indicated "Notification Date" to the following e-mail address(es):

JondleOA@jondlelaw.com

UNITED STATES PATENT AND TRADEMARK OFFICE

SEP 0 2 2011

Commissioner for Patents
United States Patent and Trademark Office
P.O. Box 1450
Alexandria, VA 22313-1450
www.uspto.gov

JONDLE & ASSOCIATES P.C.
858 HAPPY CANYON ROAD SUITE 230
CASTLE ROCK CO 80108

In re Application of:	:
William H. Eby	: PETITION DECISION
Serial No.: 12/540,967	:
Filed: August 13, 2009	:
Attorney Docket No.: **1421-391**	

This is in response to the petition under 37 CFR § 1.59(b), filed August 16, 2011, to expunge information from the above identified application. This application has not been allowed.

Petitioner requests that the Reply to Request for Information under 37 CFR 1.105, and attachment thereto, submitted to the Patent Office on August 16, 2011, be expunged from the record. Petitioner states either: (A) that the information contains trade secret material, proprietary material and/or material that is subject to a protective order which has not been made public; or (B) that the information submitted was unintentionally submitted and the failure to obtain its return would cause irreparable harm to the party who submitted the information or to the party in interest on whose behalf the information was submitted, and the information has not otherwise been made public. The petition fee set forth in 37 CFR § 1.17(g) has been paid.

This is an examined application which is currently under non-final rejection. As such the information provided has been reviewed, in part, but proceedings in the application have not been terminated. As stated in M.P.E.P. 724, upon allowance or other action closing prosecution in an application, petition may be made for return of Proprietary information. The information cannot be expunged at this time.

The petition is **DISMISSED**. Petitioner may resubmit the petition subsequent to a Notice of Allowability or *ex parte Quayle* action being mailed in the application. No additional petition fee will be required at that time.

Should there be any questions about this decision please contact Marianne C. Seidel by letter addressed to Director, TC 1600, at the address listed above, or by telephone at 571-272-0584 or by facsimile sent to the general Office facsimile number, 571-273-8300.

/MC Seidel/
Marianne C. Seidel, Quality Assurance Specialist
Technology Center 1600

UNITED STATES PATENT AND TRADEMARK OFFICE

UNITED STATES DEPARTMENT OF COMMERCE
United States Patent and Trademark Office
Address: COMMISSIONER FOR PATENTS
P.O. Box 1450
Alexandria, Virginia 22313-1450
www.uspto.gov

APPLICATION NO.	FILING DATE	FIRST NAMED INVENTOR	ATTORNEY DOCKET NO.	CONFIRMATION NO.
12/540,967	08/13/2009	William H. Eby	1421-391	2384

32905 7590 11/09/2011
JONDLE & ASSOCIATES, P.C.
858 HAPPY CANYON ROAD, SUITE 230
CASTLE ROCK, CO 80108

EXAMINER
WORLEY, CATHY KINGDON

ART UNIT	PAPER NUMBER
1638	

NOTIFICATION DATE	DELIVERY MODE
11/09/2011	ELECTRONIC

Please find below and/or attached an Office communication concerning this application or proceeding.

The time period for reply, if any, is set in the attached communication.

Notice of the Office communication was sent electronically on above-indicated "Notification Date" to the following e-mail address(es):

JondleOA@jondlelaw.com

UNITED STATES PATENT AND TRADEMARK OFFICE

Commissioner for Patents
United States Patent and Trademark Office
P.O. Box 1450
Alexandria, VA 22313-1450
www.uspto.gov

NOV 0 9 2011

JONDLE & ASSOCIATES P.C.
858 HAPPY CANYON ROAD SUITE 230
CASTLE ROCK CO 80108

In re Application of:	:
William H. Eby	: PETITION DECISION
Serial No.: 12/540,967	:
Filed: August 13, 2009	:
Attorney Docket No.: **1421-391**	

This is in response to the renewed petition under 37 CFR § 1.59(b), filed October 27, 2011, to expunge information from the above identified application. This application has been allowed.

Petitioner requests that the material submitted to the Patent Office on August 16, 2011 be expunged from the record. Petitioner states either: (A) that the information contains trade secret material, proprietary material and/or material that is subject to a protective order which has not been made public; or (B) that the information submitted was unintentionally submitted and the failure to obtain its return would cause irreparable harm to the party who submitted the information or to the party in interest on whose behalf the information was submitted, and the information has not otherwise been made public. The petition fee set forth in 37 CFR § 1.17(g) has been paid.

The reasons set forth in this petition establishes to the satisfaction of the Director that expungement of the information is appropriate. The file entry for this document has been closed and as such the document is no longer publicly available, which is the IFW equivalent to removal of a paper document from a paper file wrapper.

Therefore, petitioner's petition is GRANTED.

Should there be any questions about this decision please contact Marianne C. Seidel by letter addressed to Director, TC 1600, at the address listed above, or by telephone at 571-272-0584 or by facsimile sent to the general Office facsimile number, 571-273-8300.

/MC Seidel/
Marianne C. Seidel, Quality Assurance Specialist
Technology Center 1600

Doc code : PET.OP.AGE
Description : Petition to make special based on Age/Health

PTO/SB/130 (07-09)
Approved for use through 07/31/2012. OMB 0651- 0031
U.S. Patent and Trademark Office; U.S. DEPARTMENT OF COMMERCE
Under the Paperwork Reduction Act of 1995, no persons are required to respond to a collection of information unless it contains a valid OMB control number

PETITION TO MAKE SPECIAL BASED ON AGE FOR ADVANCEMENT OF EXAMINATION UNDER 37 CFR 1.102(c)(1)

Application Information

Application Number	12/540,987	Confirmation Number	2443	Filing Date	2009-08-13
Attorney Docket Number (optional)	1421-392	Art Unit	1638	Examiner	Cathy Kingdon Worley
First Named Inventor	WILLIAM H. EBY				
Title of Invention	SOYBEAN CULTIVAR S090000				

Attention: Office of Petitions
An application may be made special for advancement of examination upon filing of a petition showing that the applicant is 65 years of age, or more. No fee is required with such a petition. See 37 CFR 1.102(c)(1) and MPEP 708.02 (IV).

APPLICANT HEREBY PETITIONS TO MAKE SPECIAL FOR ADVANCEMENT OF EXAMINATION IN THIS APPLICATION UNDER 37 CFR 1.102(c)(1) and MPEP 708.02 (IV) ON THE BASIS OF THE APPLICANT'S AGE.

A grantable petition requires one of the following items:
(1) Statement by one named inventor in the application that he/she is 65 years of age, or more; or
(2) Certification by a registered attorney/agent having evidence such as a birth certificate, passport, driver's license, etc. showing one named inventor in the application is 65 years of age, or more.

Name of Inventor who is 65 years of age, or older

Given Name	Middle Name	Family Name	Suffix
William	H.	EBY	

A signature of the applicant or representative is required in accordance with 37 CFR 1.33 and 10.18.
Please see 37 CFR 1.4(d) for the format of the signature.

Select (1) or (2) :

○ (1) I am an inventor in this application and I am 65 years of age, or more.

● (2) I am an attorney or agent registered to practice before the Patent and Trademark Office, and I certify that I am in possession of evidence, and will retain such in the application file record, showing that the inventor listed above is 65 years of age, or more.

Signature	/Robert J. Jondle/	Date (YYYY-MM-DD)	2011-05-09
Name	Robert J. Jondle	Registration Number	33915

PTO/SB/130 (07-09)
Approved for use through 07/31/2012. OMB 0651- 0031
U.S. Patent and Trademark Office; U.S. DEPARTMENT OF COMMERCE
Under the Paperwork Reduction Act of 1995, no persons are required to respond to a collection of information unless it contains a valid OMB control number

Privacy Act Statement

The Privacy Act of 1974 (P.L. 93-579) requires that you be given certain information in connection with your submission of the attached form related to a patent application or patent. Accordingly, pursuant to the requirements of the Act, please be advised that: (1) the general authority for the collection of this information is 35 U.S.C. 2(b)(2); (2) furnishing of the information solicited is voluntary; and (3) the principal purpose for which the information is used by the U.S. Patent and Trademark Office is to process and/or examine your submission related to a patent application or patent. If you do not furnish the requested information, the U.S. Patent and Trademark Office may not be able to process and/or examine your submission, which may result in termination of proceedings or abandonment of the application or expiration of the patent.

The information provided by you in this form will be subject to the following routine uses:

1. The information on this form will be treated confidentially to the extent allowed under the Freedom of Information Act (5 U.S.C. 552) and the Privacy Act (5 U.S.C. 552a). Records from this system of records may be disclosed to the Department of Justice to determine whether the Fr eedom of Information Act requires disclosure of these records.

2. A record from this system of records may be disclosed, as a routine use, in the course of presenting evidence to a court, magistrate, or administrative tribunal, including disclosures to opposing counsel in the course of settlement negotiations.

3. A record in this system of records may be disclosed, as a routine use, to a Member of Congress submitting a request involving an individual, to whom the record pertains, when the individual has requested assistance from the Member with respect to the subject matter of the record.

4. A record in this system of records may be disclosed, as a routine use, to a contractor of the Agency having need for the information in order to perform a contract. Recipients of information shall be required to comply with the requirements of the Privacy Act of 1974, as amended, pursuant to 5 U.S.C. 552a(m).

5. A record related to an International Application filed under the Patent Cooperation Treaty in this system of records may be disclosed, as a routine use, to the International Bureau of the World Intellectual Property Organization, pursuant to the Patent Cooperation Treaty.

6. A record in this system of records may be disclosed, as a routine use, to another federal agency for purposes of National Security review (35 U.S.C. 181) and for review pursuant to the Atomic Energy Act (42 U.S.C. 218(c)).

7. A record from this system of records may be disclosed, as a routine use, to the Administrator, General Services, or his/her designee, during an inspection of records conducted by GSA as part of that agency's responsibility to recommend improvements in records management practices and programs, under authority of 44 U.S.C. 2904 and 2906. Such disclosure shall be made in accordance with the GSA regulations governing inspection of records for this purpose, and any other relevant (i.e., GSA or Commerce) directive. Such disclosure shall not be used to make determinations about indivi duals.

8. A record from this system of records may be disclosed, as a routine use, to the public after either publication of the application pursuant to 35 U.S.C. 122(b) or issuance of a patent pursuant to 35 U.S.C. 151. Further, a record may be disclosed, subject to the limitations of 37 CFR 1.14, as a routine use, to the public if the record was filed in an application which became abandoned or in which the proceedings were terminated and which application is referenced by either a published application, an application open to public inspections or an issued patent.

9. A record from this system of records may be disclosed, as a routine use, to a Federal, State, or local law enforcement agency, if the USPTO becomes aware of a violation or potential violation of law or regulation.

UNITED STATES PATENT AND TRADEMARK OFFICE

Commissioner for Patents
United States Patent and Trademark Office
P.O. Box 1450
Alexandria, VA 22313-1450
www.uspto.gov

In re Application of
William H. Eby

Application No. 12540987

Filed: August 13,2009

Attorney Docket No. 1421-392

:DECISION ON PETITION TO MAKE SPECIAL
:UNDER 37 CFR 1.102(c)(1)

This is a decision on the electronic petition under 37 CFR 1.102 (c)(1), filed 09-MAY-2011 to make the above-identified application special based on applicant's age as set forth in MPEP § 708.02, Section IV.

The petition is **GRANTED**.

A grantable petition to make an application special under 37 CFR 1.102(c)(1), MPEP § 708.02, Section IV: Applicant's Age must include a statement by applicant or a registered practitioner having evidence that applicant is at least 65 years of age. No fee is required.

Accordingly, the above-identified application has been accorded "special" status and will be taken up for action by the examiner upon the completion of all pre-examination processing.

Telephone inquiries concerning this electronic decision should be directed to the Electronic Business Center at 866-217-9197.

All other inquiries concerning either the examination or status of the application should be directed to the Technology Center.

UNITED STATES PATENT AND TRADEMARK OFFICE

UNITED STATES DEPARTMENT OF COMMERCE
United States Patent and Trademark Office
Address: COMMISSIONER FOR PATENTS
P.O. Box 1450
Alexandria, Virginia 22313-1450
www.uspto.gov

APPLICATION NO.	FILING DATE	FIRST NAMED INVENTOR	ATTORNEY DOCKET NO.	CONFIRMATION NO.
12/540,987	08/13/2009	William H. Eby	1421-392	2443

32905 7590 10/07/2011
JONDLE & ASSOCIATES, P.C.
858 HAPPY CANYON ROAD, SUITE 230
CASTLE ROCK, CO 80108

EXAMINER
WORLEY, CATHY KINGDON

ART UNIT	PAPER NUMBER
1638	

NOTIFICATION DATE	DELIVERY MODE
10/07/2011	ELECTRONIC

Please find below and/or attached an Office communication concerning this application or proceeding.

The time period for reply, if any, is set in the attached communication.

Notice of the Office communication was sent electronically on above-indicated "Notification Date" to the following e-mail address(es):

JondleOA@jondlelaw.com

UNITED STATES PATENT AND TRADEMARK OFFICE

OCT 0 7 2011

Commissioner for Patents
United States Patent and Trademark Office
P.O. Box 1450
Alexandria, VA 22313-1450
www.uspto.gov

JONDLE & ASSOCIATES P.C.
858 HAPPY CANYON ROAD SUITE 230
CASTLE ROCK CO 80108

In re Application of:	:
William H. Eby	:
Serial No.: 12/540,987	: PETITION DECISION
Filed: August 13, 2009	:
Attorney Docket No.: **1421-392**	

This is in response to the petition under 37 CFR § 1.59(b), filed June 30, 2011, to expunge information from the above identified application. This application has not been allowed.

Petitioner requests that the Reply to Request for Information under 37 CFR 1.105, and attachment thereto, submitted to the Patent Office on June 30, 2011, be expunged from the record. Petitioner states either: (A) that the information contains trade secret material, proprietary material and/or material that is subject to a protective order which has not been made public; or (B) that the information submitted was unintentionally submitted and the failure to obtain its return would cause irreparable harm to the party who submitted the information or to the party in interest on whose behalf the information was submitted, and the information has not otherwise been made public. The petition fee set forth in 37 CFR § 1.17(g) has been paid.

This is an examined application which is currently under non-final rejection. As such the information provided has been reviewed, in part, but proceedings in the application have not been terminated. As stated in M.P.E.P. 724, upon allowance or other action closing prosecution in an application, petition may be made for return of Proprietary information. The information cannot be expunged at this time.

The petition is **DISMISSED**. Petitioner may resubmit the petition subsequent to a Notice of Allowability or *ex parte Quayle* action being mailed in the application. No additional petition fee will be required at that time.

Should there be any questions about this decision please contact Marianne C. Seidel by letter addressed to Director, TC 1600, at the address listed above, or by telephone at 571-272-0584 or by facsimile sent to the general Office facsimile number, 571-273-8300.

/MC Seidel/
Marianne C. Seidel, Quality Assurance Specialist
Technology Center 1600

UNITED STATES PATENT AND TRADEMARK OFFICE

UNITED STATES DEPARTMENT OF COMMERCE
United States Patent and Trademark Office
Address: COMMISSIONER FOR PATENTS
P.O. Box 1450
Alexandria, Virginia 22313-1450
www.uspto.gov

APPLICATION NO.	FILING DATE	FIRST NAMED INVENTOR	ATTORNEY DOCKET NO.	CONFIRMATION NO.
12/540,987	08/13/2009	William H. Eby	1421-392	2443

32905 7590 11/09/2011
JONDLE & ASSOCIATES, P.C.
858 HAPPY CANYON ROAD, SUITE 230
CASTLE ROCK, CO 80108

EXAMINER
WORLEY, CATHY KINGDON

ART UNIT	PAPER NUMBER
1638	

NOTIFICATION DATE	DELIVERY MODE
11/09/2011	ELECTRONIC

Please find below and/or attached an Office communication concerning this application or proceeding.

The time period for reply, if any, is set in the attached communication.

Notice of the Office communication was sent electronically on above-indicated "Notification Date" to the following e-mail address(es):

JondleOA@jondlelaw.com

UNITED STATES PATENT AND TRADEMARK OFFICE

NOV - 9 2011

Commissioner for Patents
United States Patent and Trademark Office
P.O. Box 1450
Alexandria, VA 22313-1450
www.uspto.gov

JONDLE & ASSOCIATES P.C.
858 HAPPY CANYON ROAD SUITE 230
CASTLE ROCK CO 80108

In re Application of:	:
William H. Eby	: PETITION DECISION
Serial No.: 12/540,987	:
Filed: August 13, 2009	:
Attorney Docket No.: **1421-392**	

This is in response to the renewed petition under 37 CFR § 1.59(b), filed November 7, 2011, to expunge information from the above identified application. This application has been allowed.

Petitioner requests that the material submitted to the Patent Office on June 30, 2011 be expunged from the record. Petitioner states either: (A) that the information contains trade secret material, proprietary material and/or material that is subject to a protective order which has not been made public; or (B) that the information submitted was unintentionally submitted and the failure to obtain its return would cause irreparable harm to the party who submitted the information or to the party in interest on whose behalf the information was submitted, and the information has not otherwise been made public. The petition fee set forth in 37 CFR § 1.17(g) has been paid.

The reasons set forth in this petition establishes to the satisfaction of the Director that expungement of the information is appropriate. The file entry for this document has been closed and as such the document is no longer publicly available, which is the IFW equivalent to removal of a paper document from a paper file wrapper.

Therefore, petitioner's petition is GRANTED.

Should there be any questions about this decision please contact Marianne C. Seidel by letter addressed to Director, TC 1600, at the address listed above, or by telephone at 571-272-0584 or by facsimile sent to the general Office facsimile number, 571-273-8300.

/MC Seidel/
Marianne C. Seidel, Quality Assurance Specialist
Technology Center 1600

UNITED STATES PATENT AND TRADEMARK OFFICE

Commissioner for Patents
United States Patent and Trademark Office
P.O. Box 1450
Alexandria, VA 22313-1450
www.uspto.gov

MAILED
SEP 13 2010
OFFICE OF PETITIONS

CROWELL & MORING LLP
INTELLECTUAL PROPERTY GROUP
P.O. BOX 14300
WASHINGTON, DC 20044-4300

In re Application of.	:	
Puellen et al.	:	
Application No. 12/540,989	:	NOTICE
Filed: August 13, 2009	:	
Attorney Docket No. 010668.61831US	:	

This is a notice regarding your request for acceptance of a fee deficiency submission under 37 CFR 1.28.

The Office no longer investigates or rejects original or reissue patent under 37 CFR 1.56. **1098 Off. Gaz. Pat. Office 502 (January 3, 1989)**. Therefore, nothing in this Notice is intended to imply that an investigation was done.

Your fee deficiency submission under 37 CFR 1.28 is hereby **ACCEPTED**.

This patent application is no longer entitled to small entity status. Accordingly, all future fees paid in this patent must be paid at the large entity rate.

Inquiries related to this communication should be directed to the undersigned at (571) 272-6059.

A. Kelley

Alicia Kelley
Petitions Examiner
Office of Petitions

UNITED STATES PATENT AND TRADEMARK OFFICE

Commissioner for Patents
United States Patent and Trademark Office
P.O. Box 1450
Alexandria, VA 22313-1450
www.uspto.gov

BOZICEVIC, FIELD & FRANCIS LLP
1900 UNIVERSITY AVE, SUITE 200
EAST PALO ALTO, CA 94303

MAILED

AUG 09 2011

OFFICE OF PETITIONS

In re Application of	:	
PAYAN, Donald G.	:	
Application No. 12/540,996	:	DECISION ON PETITION
Filed: August 13, 2009	:	TO WITHDRAW
Attorney Docket No. **7946-87514-03**	:	FROM RECORD
	:	

This is a decision on the Request to Withdraw as attorney or agent of record under 37 C.F.R. § 1.36(b), filed June 24, 2011.

The request is **NOT APPROVED** as moot.

A review of the file record indicates that the power of attorney to Bozicevic, Field & Francis LLP has been revoked by the assignee of the patent application on July 27, 2011. Accordingly, the request to withdraw under 37 C.F.R. § 1.36(b) is moot.

All future communications from the Office will continue to be directed to the new address until otherwise notified by applicant.

Telephone inquires concerning this decision should be directed to the undersigned at 571-272-4231.

Michelle R. Eason
Paralegal Specialist
Office of Petitions

UNITED STATES PATENT AND TRADEMARK OFFICE

Commissioner for Patents
United States Patent and Trademark Office
P.O. Box 1450
Alexandria, VA 22313-1450

SEED IP LAW GROUP PLLC
701 FIFTH AVENUE
SUITE 5400
SEATTLE, WA 98104

MAILED

JAN 13 2011

OFFICE OF PETITIONS

Applicant: Kamboj, et al.
Appl. No.: 12/541,005
Filing Date: August 13, 2009
Title: Heterocyclic Derivatives And Their Use As Stearoyl-Coa Desaturase Inhibitors
Pub. No.: US 2009/0306090 A1
Pub. Date: December 10, 2009

This is a decision on the request for a corrected patent application publication under 37 CFR 1.221(b), received on February 8, 2010, for the above-identified application.

Applicant requests that the application be republished because the patent application publication contains material errors in the specification.

The request is DISMISSED.

37 CFR 1.221 (b) is applicable "only when the Office makes a **material mistake** which is apparent from Office records.... Any request for a corrected publication or revised patent application publication other than provided as provided in paragraph (a) of this section must be filed within two months from the date of the patent application publication. This period is not extendable." A material mistake must affect the public's ability to appreciate the technical disclosure of the patent application publication, to determine the scope of the patent application publication, or to determine the scope of the provisional rights that an applicant may seek to enforce upon issuance of a patent.[1]

The typographical errors in the specification are not material Office errors in accordance with 37 CFR 1.221(b). The application is a divisional of 11/575,641, thus the text is correctly printed in the parent application. These errors therefore does not affect the public's ability to appreciate the technical disclosure of the patent application publication, to determine the scope of the patent application publication, or to determine the scope of the provisional rights that an applicant may seek to enforce upon issuance of a patent.

The applicant is advised that a "request for republication of an application previously published" may be filed under 37 CFR 1.221 (a). Such a request for republication "must include a copy of the application compliance with the Office's electronic filing system requirements and be

[1]Changes to Implement Eighteen-Month Publication of Patent Applications, 65 FR 57023, 57038 (Sept. 20, 2000), 1239, Off. Gaz. Pat. Office Notices 63, 75 (Oct. 10, 2000) (final rule).

accompanied by the publication fee set forth in § 1.18 (d) and the processing fee set forth in § 1.17 (i)." If the request for republication does not comply with the electronic filing system requirements, the republication will not take place and the publication fee set forth in § 1.18 (d) will be refunded. The processing fee will be retained.

Any request for republication under 37 CFR 1.221(a), must be submitted via the EFS system, as a "Pre-Grant Publication" and questions or request for reconsideration of the decision, should be addressed as follows:

By mail to: Mail Stop PGPUB
Commissioner for Patents
P.O. Box 1450
Alexandria, Va. 22313-1450

A guide for filing a request for a Pre-Grant Publication, such as a request for republication, may be found on the link below:

http://www.uspto.gov/patents/process/file/efs/guidance/index.jsp

http://www.uspto.gov/ebc/portal/efs/pgpub_quickstart.pdf

Inquiries relating to this matter may be directed to Mark Polutta at (571) 272-7709.

Mark Polutta
Senior Legal Advisor
Office of Patent Legal Administration
Office of the Deputy Commissioner
for Patent Examination Policy

Doc code : PET.OP.AGE
Description : Petition to make special based on Age/Health

PTO/SB/130 (07-09)
Approved for use through 07/31/2012. OMB 0651- 0031
U.S. Patent and Trademark Office; U.S. DEPARTMENT OF COMMERCE
Under the Paperwork Reduction Act of 1995, no persons are required to respond to a collection of information unless it contains a valid OMB control number

PETITION TO MAKE SPECIAL BASED ON AGE FOR ADVANCEMENT OF EXAMINATION UNDER 37 CFR 1.102(c)(1)

Application Information

Application Number	12/541,012	Confirmation Number	2484	Filing Date	2009-08-13
Attorney Docket Number (optional)	1421-393	Art Unit	1638	Examiner	Cathy Kingdon Worley
First Named Inventor	WILLIAM H. EBY				
Title of Invention	SOYBEAN CULTIVAR 8434328				

Attention: Office of Petitions
An application may be made special for advancement of examination upon filing of a petition showing that the applicant is 65 years of age, or more. No fee is required with such a petition. See 37 CFR 1.102(c)(1) and MPEP 708.02 (IV).

APPLICANT HEREBY PETITIONS TO MAKE SPECIAL FOR ADVANCEMENT OF EXAMINATION IN THIS APPLICATION UNDER 37 CFR 1.102(c)(1) and MPEP 708.02 (IV) ON THE BASIS OF THE APPLICANT'S AGE.

A grantable petition requires one of the following items:
(1) Statement by one named inventor in the application that he/she is 65 years of age, or more; or
(2) Certification by a registered attorney/agent having evidence such as a birth certificate, passport, driver's license, etc. showing one named inventor in the application is 65 years of age, or more.

Name of Inventor who is 65 years of age, or older

Given Name	Middle Name	Family Name	Suffix
William	H.	EBY	

A signature of the applicant or representative is required in accordance with 37 CFR 1.33 and 10.18.
Please see 37 CFR 1.4(d) for the format of the signature.

Select (1) or (2) :

○ (1) I am an inventor in this application and I am 65 years of age, or more.

◉ (2) I am an attorney or agent registered to practice before the Patent and Trademark Office, and I certify that I am in possession of evidence, and will retain such in the application file record, showing that the inventor listed above is 65 years of age, or more.

Signature	/Robert J. Jondle/	Date (YYYY-MM-DD)	2011-05-09
Name	Robert J. Jondle	Registration Number	33915

PTO/SB/130 (07-09)
Approved for use through 07/31/2012. OMB 0651- 0031
U.S. Patent and Trademark Office; U.S. DEPARTMENT OF COMMERCE
Under the Paperwork Reduction Act of 1995, no persons are required to respond to a collection of information unless it contains a valid OMB control number

Privacy Act Statement

The Privacy Act of 1974 (P.L. 93-579) requires that you be given certain information in connection with your submission of the attached form related to a patent application or patent. Accordingly, pursuant to the requirements of the Act, please be advised that: (1) the general authority for the collection of this information is 35 U.S.C. 2(b)(2); (2) furnishing of the information solicited is voluntary; and (3) the principal purpose for which the information is used by the U.S. Patent and Trademark Office is to process and/or examine your submission related to a patent application or patent. If you do not furnish the requested information, the U.S. Patent and Trademark Office may not be able to process and/or examine your submission, which may result in termination of proceedings or abandonment of the application or expiration of the patent.

The information provided by you in this form will be subject to the following routine uses:

1. The information on this form will be treated confidentially to the extent allowed under the Freedom of Information Act (5 U.S.C. 552) and the Privacy Act (5 U.S.C. 552a). Records from this system of records may be disclosed to the Department of Justice to determine whether the Fr eedom of Information Act requires disclosure of these records.

2. A record from this system of records may be disclosed, as a routine use, in the course of presenting evidence to a court, magistrate, or administrative tribunal, including disclosures to opposing counsel in the course of settlement negotiations.

3. A record in this system of records may be disclosed, as a routine use, to a Member of Congress submitting a request involving an individual, to whom the record pertains, when the individual has requested assistance from the Member with respect to the subject matter of the record.

4. A record in this system of records may be disclosed, as a routine use, to a contractor of the Agency having need for the information in order to perform a contract. Recipients of information shall be required to comply with the requirements of the Privacy Act of 1974, as amended, pursuant to 5 U.S.C. 552a(m).

5. A record related to an International Application filed under the Patent Cooperation Treaty in this system of records may be disclosed, as a routine use, to the International Bureau of the World Intellectual Property Organization, pursuant to the Patent Cooperation Treaty.

6. A record in this system of records may be disclosed, as a routine use, to another federal agency for purposes of National Security review (35 U.S.C. 181) and for review pursuant to the Atomic Energy Act (42 U.S.C. 218(c)).

7. A record from this system of records may be disclosed, as a routine use, to the Administrator, General Services, or his/her designee, during an inspection of records conducted by GSA as part of that agency's responsibility to recommend improvements in records management practices and programs, under authority of 44 U.S.C. 2904 and 2906. Such disclosure shall be made in accordance with the GSA regulations governing inspection of records for this purpose, and any other relevant (i.e., GSA or Commerce) directive. Such disclosure shall not be used to make determinations about indivi duals.

8. A record from this system of records may be disclosed, as a routine use, to the public after either publication of the application pursuant to 35 U.S.C. 122(b) or issuance of a patent pursuant to 35 U.S.C. 151. Further, a record may be disclosed, subject to the limitations of 37 CFR 1.14, as a routine use, to the public if the record was filed in an application which became abandoned or in which the proceedings were terminated and which application is referenced by either a published application, an application open to public inspections or an issued patent.

9. A record from this system of records may be disclosed, as a routine use, to a Federal, State, or local law enforcement agency, if the USPTO becomes aware of a violation or potential violation of law or regulation.

UNITED STATES PATENT AND TRADEMARK OFFICE

Commissioner for Patents
United States Patent and Trademark Office
P.O. Box 1450
Alexandria, VA 22313-1450
www.uspto.gov

In re Application of
William H. Eby

Application No. 12541012

Filed: August 13,2009

Attorney Docket No. 1421-393

:DECISION ON PETITION TO MAKE SPECIAL
:UNDER 37 CFR 1.102(c)(1)

This is a decision on the electronic petition under 37 CFR 1.102 (c)(1), filed 09-MAY-2011 to make the above-identified application special based on applicant's age as set forth in MPEP § 708.02, Section IV.

The petition is **GRANTED**.

A grantable petition to make an application special under 37 CFR 1.102(c)(1), MPEP § 708.02, Section IV: Applicant's Age must include a statement by applicant or a registered practitioner having evidence that applicant is at least 65 years of age. No fee is required.

Accordingly, the above-identified application has been accorded "special" status and will be taken up for action by the examiner upon the completion of all pre-examination processing.

Telephone inquiries concerning this electronic decision should be directed to the Electronic Business Center at 866-217-9197.

All other inquiries concerning either the examination or status of the application should be directed to the Technology Center.

UNITED STATES PATENT AND TRADEMARK OFFICE

UNITED STATES DEPARTMENT OF COMMERCE
United States Patent and Trademark Office
Address: COMMISSIONER FOR PATENTS
P.O. Box 1450
Alexandria, Virginia 22313-1450
www.uspto.gov

APPLICATION NO.	FILING DATE	FIRST NAMED INVENTOR	ATTORNEY DOCKET NO.	CONFIRMATION NO.
12/541,012	08/13/2009	William H. Eby	1421-393	2484

32905 7590 07/12/2011
JONDLE & ASSOCIATES, P.C.
858 HAPPY CANYON ROAD, SUITE 230
CASTLE ROCK, CO 80108

EXAMINER
WORLEY, CATHY KINGDON

ART UNIT	PAPER NUMBER
1638	

NOTIFICATION DATE	DELIVERY MODE
07/12/2011	ELECTRONIC

Please find below and/or attached an Office communication concerning this application or proceeding.

The time period for reply, if any, is set in the attached communication.

Notice of the Office communication was sent electronically on above-indicated "Notification Date" to the following e-mail address(es):

JondleOA@jondlelaw.com

UNITED STATES PATENT AND TRADEMARK OFFICE

Commissioner for Patents
United States Patent and Trademark Office
P.O. Box 1450
Alexandria, VA 22313-1450
www.uspto.gov

JUL 12 2011

JONDLE & ASSOCIATES P.C.
858 HAPPY CANYON ROAD SUITE 230
CASTLE ROCK CO 80108

In re Application of:	:
William H. Eby	:
Serial No.: 12/541,012	: PETITION DECISION
Filed: August 13, 2009	:
Attorney Docket No.: **1421-393**	

This is in response to the petition under 37 CFR § 1.59(b), filed June 29, 2011, to expunge information from the above identified application. This application has not been allowed.

Petitioner requests that the Reply to Request for Information under 37 CFR 1.105, and attachment thereto, submitted to the Patent Office on June 29, 2011, be expunged from the record. Petitioner states either: (A) that the information contains trade secret material, proprietary material and/or material that is subject to a protective order which has not been made public; or (B) that the information submitted was unintentionally submitted and the failure to obtain its return would cause irreparable harm to the party who submitted the information or to the party in interest on whose behalf the information was submitted, and the information has not otherwise been made public. The petition fee set forth in 37 CFR § 1.17(g) has been paid.

This is an examined application which is currently under non-final rejection. As such the information provided has been reviewed, in part, but proceedings in the application have not been terminated. As stated in M.P.E.P. 724, upon allowance or other action closing prosecution in an application, petition may be made for return of Proprietary information. The information cannot be expunged at this time.

The petition is **DISMISSED**. Petitioner may resubmit the petition subsequent to a Notice of Allowability or *ex parte Quayle* action being mailed in the application. No additional petition fee will be required at that time.

Should there be any questions about this decision please contact Marianne C. Seidel by letter addressed to Director, TC 1600, at the address listed above, or by telephone at 571-272-0584 or by facsimile sent to the general Office facsimile number, 571-273-8300.

/MC Seidel/
Marianne C. Seidel, Quality Assurance Specialist
Technology Center 1600

UNITED STATES PATENT AND TRADEMARK OFFICE

UNITED STATES DEPARTMENT OF COMMERCE
United States Patent and Trademark Office
Address: COMMISSIONER FOR PATENTS
P.O. Box 1450
Alexandria, Virginia 22313-1450
www.uspto.gov

APPLICATION NO.	FILING DATE	FIRST NAMED INVENTOR	ATTORNEY DOCKET NO.	CONFIRMATION NO.
12/541,012	08/13/2009	William H. Eby	1421-393	2484

32905 7590 09/16/2011
JONDLE & ASSOCIATES, P.C.
858 HAPPY CANYON ROAD, SUITE 230
CASTLE ROCK, CO 80108

EXAMINER
WORLEY, CATHY KINGDON

ART UNIT	PAPER NUMBER
1638	

NOTIFICATION DATE	DELIVERY MODE
09/16/2011	ELECTRONIC

Please find below and/or attached an Office communication concerning this application or proceeding.

The time period for reply, if any, is set in the attached communication.

Notice of the Office communication was sent electronically on above-indicated "Notification Date" to the following e-mail address(es):

JondleOA@jondlelaw.com

UNITED STATES PATENT AND TRADEMARK OFFICE

Commissioner for Patents
United States Patent and Trademark Office
P.O. Box 1450
Alexandria, VA 22313-1450
www.uspto.gov

SEP 1 6 2011

JONDLE & ASSOCIATES P.C.
858 HAPPY CANYON ROAD SUITE 230
CASTLE ROCK CO 80108

In re Application of:	:
William H. Eby	: PETITION DECISION
Serial No.: 12/541,012	:
Filed: August 13, 2009	:
Attorney Docket No.: **1421-393**	

This is in response to the renewed petition under 37 CFR § 1.59(b), filed September 14, 2011, to expunge information from the above identified application. This application has been allowed.

Petitioner requests that the material submitted to the Patent Office on June 29, 2011 be expunged from the record. Petitioner states either: (A) that the information contains trade secret material, proprietary material and/or material that is subject to a protective order which has not been made public; or (B) that the information submitted was unintentionally submitted and the failure to obtain its return would cause irreparable harm to the party who submitted the information or to the party in interest on whose behalf the information was submitted, and the information has not otherwise been made public. The petition fee set forth in 37 CFR § 1.17(g) has been paid.

The reasons set forth in this petition establishes to the satisfaction of the Director that expungement of the information is appropriate. The file entry for this document has been closed and as such the document is no longer publicly available, which is the IFW equivalent to removal of a paper document from a paper file wrapper.

Therefore, petitioner's petition is GRANTED.

Should there be any questions about this decision please contact Marianne C. Seidel by letter addressed to Director, TC 1600, at the address listed above, or by telephone at 571-272-0584 or by facsimile sent to the general Office facsimile number, 571-273-8300.

/MC Seidel/
Marianne C. Seidel, Quality Assurance Specialist
Technology Center 1600

UNITED STATES PATENT AND TRADEMARK OFFICE

Commissioner for Patents
United States Patent and Trademark Office
P.O. Box 1450
Alexandria, VA 22313-1450
www.uspto.gov

KYTHERA BIOPHARMACEUTICALS, INC.
C/O FOLEY & LARDNER LLP
975 PAGE MILL ROAD
PALO ALTO CA 94304

MAILED

OCT 03 2011

OFFICE OF PETITIONS

In re Application of	:	
MORIARTY, et al	:	
Application No. 12/541,045	:	DECISION ON PETITION
Filed: August 13, 2009	:	TO MAKE SPECIAL UNDER
Attorney Docket No. 069611-0601	:	37 CFR 1.102(c)(1)
	:	

This is a decision on the petition under 37 CFR 1.102(c)(1), filed September 19, 2011, to make the above-identified application special based on applicant's age as set forth in M.P.E.P. § 708.02, Section IV.

The petition is **GRANTED**.

A grantable petition to make an application special under 37 CFR 1.102(c)(1) and MPEP § 708.02, Section IV: Applicant's Age must be accompanied by evidence showing that at least one of the applicants is 65 years of age, or more, such as a birth certificate or a statement by applicant. No fee is required

The instant petition includes a statement by Applicant Robert M. Moriarty. Accordingly, the above-identified application has been accorded "special" status.

Telephone inquiries concerning this decision should be directed to the undersigned at (571) 272-6735.

All other inquiries concerning either the examination or status of the application should be directed to the Technology Center at (571) 272-1600.

The application is being forwarded to Technology Center Art Unit 1628 for action on the merits commensurate with this decision.

/Diane Goodwyn/
Diane Goodwyn
Petitions Examiner
Office of Petitions

UNITED STATES PATENT AND TRADEMARK OFFICE

Commissioner for Patents
United States Patent and Trademark Office
P.O. Box 1450
Alexandria, VA 22313-1450
www.uspto.gov

Law Offices of Daniel L. Dawes
Dawes Patent Law Group
5200 Warner Blvd, Ste. 106
Huntington Beach CA 92649

MAILED
OCT 07 2010
OFFICE OF PETITIONS

In re Application of	:	
Ronald G. Holder, et al.	:	DECISION ON PETITION
Application No. 12/541,060	:	TO WITHDRAW
Filed: August 13, 2009	:	FROM RECORD
Attorney Docket No. **IMS1.PAU.17**	:	

This is a decision on the request to withdraw as attorney of record under 37 CFR § 1.36, filed September 16, 2010.

The request is **NOT APPROVED**.

The request cannot be approved because it lacks a forwarding correspondence address of the first named inventor or a properly intervening assignee.

If the forwarding correspondence address is to the assignee, the Office will only accept correspondence address changes to the most current address information provided for the assignee of the entire interest *that properly became of record under 37 CFR 3.71.* 37 CFR 3.71(c) states:

> *An assignee becomes of record either in a national patent application or a reexamination proceeding by filing a statement in compliance with § 3.73(b) that is signed by a party who is authorized to act on behalf of the assignee.*

The assignee must establish its ownership of the patent to the satisfaction of the Director. In this regard, the statement under 37 CFR 3.73(b) must have either: (i) documentary evidence of a chain of title from the original owner to the assignee (*e.g.*, copy of an executed assignment), and a statement affirming that the documentary evidence of the chain of title from the original owner to the assignee was or concurrently is being submitted for recordation pursuant to § 3.11; or (ii) a statement specifying where documentary evidence of a chain of title from the original owner to the assignee is recorded in the assignment records of the Office (*e.g.*, reel and frame number).

All future communications from the Office will continue to be directed to the above-listed address until otherwise notified by applicant.

Telephone inquires concerning this decision should be directed to the undersigned at (571) 272-2991.

Terri Johnson
Petitions Examiner
Office of Petitions

UNITED STATES PATENT AND TRADEMARK OFFICE

Commissioner for Patents
United States Patent and Trademark Office
P.O. Box 1450
Alexandria, VA 22313-1450
www.uspto.gov

In re Application of
William H. Eby

Application No. 12541069

Filed: August 13,2009

Attorney Docket No. 1421-394

:DECISION ON PETITION TO MAKE SPECIAL
:UNDER 37 CFR 1.102(c)(1)

This is a decision on the electronic petition under 37 CFR 1.102 (c)(1), filed 09-MAY-2011 to make the above-identified application special based on applicant's age as set forth in MPEP § 708.02, Section IV.

The petition is **GRANTED**.

A grantable petition to make an application special under 37 CFR 1.102(c)(1), MPEP § 708.02, Section IV: Applicant's Age must include a statement by applicant or a registered practitioner having evidence that applicant is at least 65 years of age. No fee is required.

Accordingly, the above-identified application has been accorded "special" status and will be taken up for action by the examiner upon the completion of all pre-examination processing.

Telephone inquiries concerning this electronic decision should be directed to the Electronic Business Center at 866-217-9197.

All other inquiries concerning either the examination or status of the application should be directed to the Technology Center.

Doc code : PET.OP.AGE
Description : Petition to make special based on Age/Health

PTO/SB/130 (07-09)
Approved for use through 07/31/2012. OMB 0651- 0031
U.S. Patent and Trademark Office; U.S. DEPARTMENT OF COMMERCE
Under the Paperwork Reduction Act of 1995, no persons are required to respond to a collection of information unless it contains a valid OMB control number

PETITION TO MAKE SPECIAL BASED ON AGE FOR ADVANCEMENT OF EXAMINATION UNDER 37 CFR 1.102(c)(1)

Application Information

Application Number	12/541,069	Confirmation Number	2590	Filing Date	2009-08-13
Attorney Docket Number (optional)	1421-394	Art Unit	1638	Examiner	Cathy Kingdon Worley
First Named Inventor	WILLIAM H. EBY				
Title of Invention	SOYBEAN CULTIVAR S080173				

Attention: Office of Petitions
An application may be made special for advancement of examination upon filing of a petition showing that the applicant is 65 years of age, or more. No fee is required with such a petition. See 37 CFR 1.102(c)(1) and MPEP 708.02 (IV).

APPLICANT HEREBY PETITIONS TO MAKE SPECIAL FOR ADVANCEMENT OF EXAMINATION IN THIS APPLICATION UNDER 37 CFR 1.102(c)(1) and MPEP 708.02 (IV) ON THE BASIS OF THE APPLICANT'S AGE.

A grantable petition requires one of the following items:
(1) Statement by one named inventor in the application that he/she is 65 years of age, or more; or
(2) Certification by a registered attorney/agent having evidence such as a birth certificate, passport, driver's license, etc. showing one named inventor in the application is 65 years of age, or more.

Name of Inventor who is 65 years of age, or older

Given Name	Middle Name	Family Name	Suffix
William	H.	EBY	

A signature of the applicant or representative is required in accordance with 37 CFR 1.33 and 10.18.
Please see 37 CFR 1.4(d) for the format of the signature.

Select (1) or (2) :

○ (1) I am an inventor in this application and I am 65 years of age, or more.

◉ (2) I am an attorney or agent registered to practice before the Patent and Trademark Office, and I certify that I am in possession of evidence, and will retain such in the application file record, showing that the inventor listed above is 65 years of age, or more.

Signature	/Robert J. Jondle/	Date (YYYY-MM-DD)	2011-05-09
Name	Robert J. Jondle	Registration Number	33915

PTO/SB/130 (07-09)
Approved for use through 07/31/2012. OMB 0651- 0031
U.S. Patent and Trademark Office; U.S. DEPARTMENT OF COMMERCE
Under the Paperwork Reduction Act of 1995, no persons are required to respond to a collection of information unless it contains a valid OMB control number

Privacy Act Statement

The Privacy Act of 1974 (P.L. 93-579) requires that you be given certain information in connection with your submission of the attached form related to a patent application or patent. Accordingly, pursuant to the requirements of the Act, please be advised that: (1) the general authority for the collection of this information is 35 U.S.C. 2(b)(2); (2) furnishing of the information solicited is voluntary; and (3) the principal purpose for which the information is used by the U.S. Patent and Trademark Office is to process and/or examine your submission related to a patent application or patent. If you do not furnish the requested information, the U.S. Patent and Trademark Office may not be able to process and/or examine your submission, which may result in termination of proceedings or abandonment of the application or expiration of the patent.

The information provided by you in this form will be subject to the following routine uses:

1. The information on this form will be treated confidentially to the extent allowed under the Freedom of Information Act (5 U.S.C. 552) and the Privacy Act (5 U.S.C. 552a). Records from this system of records may be disclosed to the Department of Justice to determine whether the Fr eedom of Information Act requires disclosure of these records.

2. A record from this system of records may be disclosed, as a routine use, in the course of presenting evidence to a court, magistrate, or administrative tribunal, including disclosures to opposing counsel in the course of settlement negotiations.

3. A record in this system of records may be disclosed, as a routine use, to a Member of Congress submitting a request involving an individual, to whom the record pertains, when the individual has requested assistance from the Member with respect to the subject matter of the record.

4. A record in this system of records may be disclosed, as a routine use, to a contractor of the Agency having need for the information in order to perform a contract. Recipients of information shall be required to comply with the requirements of the Privacy Act of 1974, as amended, pursuant to 5 U.S.C. 552a(m).

5. A record related to an International Application filed under the Patent Cooperation Treaty in this system of records may be disclosed, as a routine use, to the International Bureau of the World Intellectual Property Organization, pursuant to the Patent Cooperation Treaty.

6. A record in this system of records may be disclosed, as a routine use, to another federal agency for purposes of National Security review (35 U.S.C. 181) and for review pursuant to the Atomic Energy Act (42 U.S.C. 218(c)).

7. A record from this system of records may be disclosed, as a routine use, to the Administrator, General Services, or his/her designee, during an inspection of records conducted by GSA as part of that agency's responsibility to recommend improvements in records management practices and programs, under authority of 44 U.S.C. 2904 and 2906. Such disclosure shall be made in accordance with the GSA regulations governing inspection of records for this purpose, and any other relevant (i.e., GSA or Commerce) directive. Such disclosure shall not be used to make determinations about indivi duals.

8. A record from this system of records may be disclosed, as a routine use, to the public after either publication of the application pursuant to 35 U.S.C. 122(b) or issuance of a patent pursuant to 35 U.S.C. 151. Further, a record may be disclosed, subject to the limitations of 37 CFR 1.14, as a routine use, to the public if the record was filed in an application which became abandoned or in which the proceedings were terminated and which application is referenced by either a published application, an application open to public inspections or an issued patent.

9. A record from this system of records may be disclosed, as a routine use, to a Federal, State, or local law enforcement agency, if the USPTO becomes aware of a violation or potential violation of law or regulation.

UNITED STATES PATENT AND TRADEMARK OFFICE

UNITED STATES DEPARTMENT OF COMMERCE
United States Patent and Trademark Office
Address: COMMISSIONER FOR PATENTS
P.O. Box 1450
Alexandria, Virginia 22313-1450
www.uspto.gov

APPLICATION NO.	FILING DATE	FIRST NAMED INVENTOR	ATTORNEY DOCKET NO.	CONFIRMATION NO.
12/541,069	08/13/2009	William H. Eby	1421-394	2590

32905 7590 07/11/2011
JONDLE & ASSOCIATES, P.C.
858 HAPPY CANYON ROAD, SUITE 230
CASTLE ROCK, CO 80108

EXAMINER
WORLEY, CATHY KINGDON

ART UNIT	PAPER NUMBER
1638	

NOTIFICATION DATE	DELIVERY MODE
07/11/2011	ELECTRONIC

Please find below and/or attached an Office communication concerning this application or proceeding.

The time period for reply, if any, is set in the attached communication.

Notice of the Office communication was sent electronically on above-indicated "Notification Date" to the following e-mail address(es):

JondleOA@jondlelaw.com

UNITED STATES PATENT AND TRADEMARK OFFICE

JUL 1 1 2011

Commissioner for Patents
United States Patent and Trademark Office
P.O. Box 1450
Alexandria, VA 22313-1450
www.uspto.gov

JONDLE & ASSOCIATES P.C.
858 HAPPY CANYON ROAD SUITE 230
CASTLE ROCK CO 80108

In re Application of:	:
William H. Eby	:
Serial No.: 12/541,069	: PETITION DECISION
Filed: August 13, 2009	:
Attorney Docket No.: **1421-394**	

This is in response to the petition under 37 CFR § 1.59(b), filed June 29, 2011, to expunge information from the above identified application. This application has not been allowed.

Petitioner requests that the Reply to Request for Information under 37 CFR 1.105, and attachment thereto, submitted to the Patent Office on June 29, 2011, be expunged from the record. Petitioner states either: (A) that the information contains trade secret material, proprietary material and/or material that is subject to a protective order which has not been made public; or (B) that the information submitted was unintentionally submitted and the failure to obtain its return would cause irreparable harm to the party who submitted the information or to the party in interest on whose behalf the information was submitted, and the information has not otherwise been made public. The petition fee set forth in 37 CFR § 1.17(g) has been paid.

This is an examined application which is currently under non-final rejection. As such the information provided has been reviewed, in part, but proceedings in the application have not been terminated. As stated in M.P.E.P. 724, upon allowance or other action closing prosecution in an application, petition may be made for return of Proprietary information. The information cannot be expunged at this time.

The petition is **DISMISSED**. Petitioner may resubmit the petition subsequent to a Notice of Allowability or *ex parte Quayle* action being mailed in the application. No additional petition fee will be required at that time.

Should there be any questions about this decision please contact Marianne C. Seidel by letter addressed to Director, TC 1600, at the address listed above, or by telephone at 571-272-0584 or by facsimile sent to the general Office facsimile number, 571-273-8300.

/MC Seidel/
Marianne C. Seidel, Quality Assurance Specialist
Technology Center 1600

UNITED STATES PATENT AND TRADEMARK OFFICE

UNITED STATES DEPARTMENT OF COMMERCE
United States Patent and Trademark Office
Address: COMMISSIONER FOR PATENTS
P.O. Box 1450
Alexandria, Virginia 22313-1450
www.uspto.gov

APPLICATION NO.	FILING DATE	FIRST NAMED INVENTOR	ATTORNEY DOCKET NO.	CONFIRMATION NO.
12/541,069	08/13/2009	William H. Eby	1421-394	2590

32905 7590 09/16/2011
JONDLE & ASSOCIATES, P.C.
858 HAPPY CANYON ROAD, SUITE 230
CASTLE ROCK, CO 80108

EXAMINER
WORLEY, CATHY KINGDON

ART UNIT	PAPER NUMBER
1638	

NOTIFICATION DATE	DELIVERY MODE
09/16/2011	ELECTRONIC

Please find below and/or attached an Office communication concerning this application or proceeding.

The time period for reply, if any, is set in the attached communication.

Notice of the Office communication was sent electronically on above-indicated "Notification Date" to the following e-mail address(es):

JondleOA@jondlelaw.com

UNITED STATES PATENT AND TRADEMARK OFFICE

Commissioner for Patents
United States Patent and Trademark Office
P.O. Box 1450
Alexandria, VA 22313-1450
www.uspto.gov

JONDLE & ASSOCIATES P.C.
858 HAPPY CANYON ROAD SUITE 230
CASTLE ROCK CO 80108

In re Application of:	:
William H. Eby	: PETITION DECISION
Serial No.: 12/541,069	:
Filed: August 13, 2009	:
Attorney Docket No.: **1421-394**	

This is in response to the renewed petition under 37 CFR § 1.59(b), filed September 14, 2011, to expunge information from the above identified application. This application has been allowed.

Petitioner requests that the material submitted to the Patent Office on June 29, 2011 be expunged from the record. Petitioner states either: (A) that the information contains trade secret material, proprietary material and/or material that is subject to a protective order which has not been made public; or (B) that the information submitted was unintentionally submitted and the failure to obtain its return would cause irreparable harm to the party who submitted the information or to the party in interest on whose behalf the information was submitted, and the information has not otherwise been made public. The petition fee set forth in 37 CFR § 1.17(g) has been paid.

The reasons set forth in this petition establishes to the satisfaction of the Director that expungement of the information is appropriate. The file entry for this document has been closed and as such the document is no longer publicly available, which is the IFW equivalent to removal of a paper document from a paper file wrapper.

Therefore, petitioner's petition is GRANTED.

Should there be any questions about this decision please contact Marianne C. Seidel by letter addressed to Director, TC 1600, at the address listed above, or by telephone at 571-272-0584 or by facsimile sent to the general Office facsimile number, 571-273-8300.

/MC Seidel/
Marianne C. Seidel, Quality Assurance Specialist
Technology Center 1600

UNITED STATES PATENT AND TRADEMARK OFFICE

UNITED STATES DEPARTMENT OF COMMERCE
United States Patent and Trademark Office
Address: COMMISSIONER FOR PATENTS
P.O. Box 1450
Alexandria, Virginia 22313-1450
www.uspto.gov

APPLICATION NO.	FILING DATE	FIRST NAMED INVENTOR	ATTORNEY DOCKET NO.	CONFIRMATION NO.
12/541,096	08/13/2009	Huai-Rong Shao	SAM2B.PAU.135	2641

97001 7590 03/28/2012
Sherman & Zarrabian LLP
(Samsung R&D Center)
1411 5th Street, Suite 306
Santa Monica, CA 90401

EXAMINER
BEDNASH, JOSEPH A

ART UNIT	PAPER NUMBER
2461	

MAIL DATE	DELIVERY MODE
03/28/2012	PAPER

Please find below and/or attached an Office communication concerning this application or proceeding.

The time period for reply, if any, is set in the attached communication.

UNITED STATES PATENT AND TRADEMARK OFFICE

Commissioner for Patents
United States Patent and Trademark Office
P.O. Box 1450
Alexandria, VA 22313-1450
www.uspto.gov

Sarah Nielsen
Myers Andras Sherman & Zarrabian LLP
(Samsung R & D Center)
1411 5th Street, Suite 306
Santa Monica, CA 90401

In re Application of:
Shao et al.
Appl. No.: 12/541,096
Filed: August 13, 2009
For: Method and System for Station to Station Directional Wireless Communication

DECISION ON PETITION
UNDER 37 CFR § 1.59

This is a decision on the petition under 37 CFR § 1.59(b), filed on 19 January 2012, to expunge information submitted pursuant to MPEP § 724.02.

The petition is **DISMISSED**.

Petitioner requests that the information submitted on 19 January 2012be expunged from the record as the information was identified as being under a protective order after it was filed. The petition fee set forth in 37 CFR § 1.17(g) has been paid.

The petition is premature because the application is not currently allowed or abandoned. Accordingly, it is not appropriate to make a final determination of whether or not the material requested to be expunged is "material," with "materiality" being defined as any information which the examiner considers as being important to a determination of patentability of the claims.

During prosecution on the merits, the examiner will determine whether or not the information submitted on 19 January 2012is considered to be "material." Once prosecution on the merits is closed, applicant may re-submit a petition to expunge the information. No further fee is required for such a second submission of a petition under 37 CFR § 1.59 to expunge information. If the information is not considered by the examiner to be material, the information will be removed from the file.

Any inquiry concerning this decision should be directed to the undersigned whose telephone number is (571) 272-3612. A second point of contact is Chris Grant at (571) 272-7294.

Tod Swann, QAS
Technology Center 200

UNITED STATES PATENT AND TRADEMARK OFFICE

Commissioner for Patents
United States Patent and Trademark Office
P.O. Box 1450
Alexandria, VA 22313-1450
www.uspto.gov

STEPTOE & JOHNSON LLP
1330 CONNECTICUT AVENUE, N.W.
WASHINGTON DC 20036

MAILED
JUL 15 2011
OFFICE OF PETITIONS

In re Application of	:	
FINE, et al	:	
Application No. 12/541,137	:	DECISION ON PETITION
Filed: August 13, 2009	:	TO MAKE SPECIAL UNDER
Attorney Docket No. 16250.0014	:	37 CFR 1.102(c)(1)
	:	

This is a decision on the petition under 37 CFR 1.102(c)(1), filed June 8, 2011, to make the above-identified application special based on applicant's age as set forth in M.P.E.P. § 708.02, Section IV.

The petition is **GRANTED.**

A grantable petition to make an application special under 37 CFR 1.102(c)(1) and MPEP § 708.02, Section IV: Applicant's Age must be accompanied by evidence showing that at least one of the applicants is 65 years of age, or more, such as a birth certificate or a statement by applicant. No fee is required

The instant petition includes a statement by Applicant David H. Fine. Accordingly, the above-identified application has been accorded "special" status.

Telephone inquiries concerning this decision should be directed to the undersigned at (571) 272-6735.

All other inquiries concerning either the examination or status of the application should be directed to the Technology Center at (571) 272-3700.

The application is being forwarded to Technology Center Art Unit 3771 for action on the merits commensurate with this decision.

/Diane C. Goodwyn/
Diane C. Goodwyn
Petitions Examiner
Office of Petitions

UNITED STATES PATENT AND TRADEMARK OFFICE

Commissioner for Patents
United States Patent and Trademark Office
P.O. Box 1450
Alexandria, VA 22313-1450
www.uspto.gov

STEPTOE & JOHNSON LLP
1330 CONNECTICUT AVENUE, N.W.
WASHINGTON DC 20036

MAILED
JUN 29 2011
OFFICE OF PETITIONS

In re Application of	:	
Fine et al.	:	
Application No. 12/541,141	:	ON PETITION
Filed: August 13, 2009		
Attorney Docket No. 16250.0015	:	
	:	

This is a decision on the petition under 37 CFR 1.102(c)(1), filed June 8, 2011, to make the above-identified application special based on applicant's age as set forth in M.P.E.P. § 708.02, Section IV.

The petition is **GRANTED**.

A grantable petition to make an application special under 37 CFR 1.102(c)(1) and MPEP § 708.02, Section IV: Applicant's Age must be accompanied by evidence showing that at least one of the applicants is 65 years of age, or more, such as a birth certificate or a statement by applicant. No fee is required

The instant petition includes a statement by applicant's attorney that applicant is 65 years of age and a statement (PTO/SB/130 form) by the applicant that applicant is 65 years of age. Accordingly, the above-identified application has been accorded "special" status.

Telephone inquiries concerning this decision should be directed to the undersigned at 571-272-7751. All other inquiries concerning either the examination or status of the application should be directed to the Technology Center.

This matter is being referred to the Technology Center Art Unit 3771 for action on the merits commensurate with this decision.

/Joan Olszewski/
Joan Olszewski
Petitions Examiner
Office of Petitions

UNITED STATES PATENT AND TRADEMARK OFFICE

Commissioner for Patents
United States Patent and Trademark Office
P.O. Box 1450
Alexandria, VA 22313-1450
www.uspto.gov

STEPTOE & JOHNSON LLP
1330 CONNECTICUT AVENUE, N.W.
WASHINGTON DC 20036

MAILED
JUN 29 2011
OFFICE OF PETITIONS

In re Application of	:	
Fine et al.	:	
Application No. 12/541,144	:	ON PETITION
Filed: August 13, 2009		
Attorney Docket No. 16250.0016	:	
	:	

This is a decision on the petition under 37 CFR 1.102(c)(1), filed June 8, 2011, to make the above-identified application special based on applicant's age as set forth in M.P.E.P. § 708.02, Section IV.

The petition is **GRANTED**.

A grantable petition to make an application special under 37 CFR 1.102(c)(1) and MPEP § 708.02, Section IV: Applicant's Age must be accompanied by evidence showing that at least one of the applicants is 65 years of age, or more, such as a birth certificate or a statement by applicant. No fee is required

The instant petition includes a statement by applicant's attorney that applicant is 65 years of age and a statement (PTO/SB/130 form) by the applicant that applicant is 65 years of age. Accordingly, the above-identified application has been accorded "special" status.

Telephone inquiries concerning this decision should be directed to the undersigned at 571-272-7751. All other inquiries concerning either the examination or status of the application should be directed to the Technology Center.

This matter is being referred to the Technology Center Art Unit 3771 for action on the merits commensurate with this decision.

/Joan Olszewski/
Joan Olszewski
Petitions Examiner
Office of Petitions

UNITED STATES PATENT AND TRADEMARK OFFICE

Commissioner for Patents
United States Patent and Trademark Office
P.O. Box 1450
Alexandria, VA 22313-1450
www.uspto.gov

David Bogart Dort
STEALTHDRIVE LLC
BOX 320069
ALEXANDRIA VA 22320

MAILED
JUL 19 2011
OFFICE OF PETITIONS

In re Application of	:	
Paul Douglas Cochrane	:	
Application No. 12/541,161	:	DECISION ON PETITION
Filed: August 14, 2009	:	
Attorney Docket No. TORP.P034.A	:	

This is a decision on the petition under the unintentional provisions of 37 CFR 1.137(b), filed July 3, 2011, to revive the above-identified application.

The petition is **GRANTED**.

The application became abandoned for failure to reply in a timely manner to the Notice to File Missing Parts of Nonprovisional Application (Notice), mailed September 2, 2009. The Notice set a period for reply of two (2) months from the mail date of the Notice. No extensions of time under the provisions of 37 CFR 1.136(a) were obtained. Accordingly, the application became abandoned on November 3, 2009. The Notice of Abandonment was mailed May 7, 2010.

The petition satisfies the requirements of 37 CFR 1.137(b) in that petitioner has supplied (1) the reply in the form of a declaration, replacement drawings, $82 filing fee, $65 surcharge, $110 examination fee and $270 search fee, (2) the petition fee of $810, and (3) an adequate statement of unintentional delay.

Telephone inquiries concerning this decision should be directed to Terri Johnson at (571) 272-2991.

This application is being referred to the Office of Patent Application Processing for appropriate action on the reply received.

/Terri Johnson/
Terri Johnson
Petitions Examiner
Office of Petitions

Doc Code: PET.AUTO Document Description: Petition automatically granted by EFS-Web	PTO/SB/140 U.S. Patent and Trademark Office Department of Commerce

Electronic Petition Request	**PETITION TO WITHDRAW AN APPLICATION FROM ISSUE AFTER PAYMENT OF THE ISSUE FEE UNDER 37 CFR 1.313(c)**
Application Number	12541212
Filing Date	14-Aug-2009
First Named Inventor	Gabriel KALLABIS
Art Unit	2841
Examiner Name	AMY JOHNSON
Attorney Docket Number	09057
Title	LASER DEVICE

An application may be withdrawn from issue for further action upon petition by the applicant. To request that the Office withdraw an application from issue, applicant must file a petition under this section including the fee set forth in § 1.17(h) and a showing of good and sufficient reasons why withdrawal of the application from issue is necessary.

APPLICANT HEREBY PETITIONS TO WITHDRAW THIS APPLICATION FROM ISSUE UNDER 37 CFR 1.313(c).

A grantable petition requires the following items:
(1) Petition fee; and
(2) One of the following reasons:
(a) Unpatentability of one or more claims, which must be accompanied by an unequivocal statement that one or more claims are unpatentable, an amendment to such claim or claims, and an explanation as to how the amendment causes such claim or claims to be patentable;
(b) Consideration of a request for continued examination in compliance with § 1.114 (for a utility or plant application only); or
(c) Express abandonment of the application. Such express abandonment may be in favor of a continuing application, but not a CPA under 37 CFR 1.53(d).

Petition Fee

☐ Applicant claims SMALL ENTITY status. See 37 CFR 1.27.

☐ Applicant is no longer claiming SMALL ENTITY status. See 37 CFR 1.27(g)(2).

☐ Applicant(s) status remains as SMALL ENTITY.

☒ Applicant(s) status remains as other than SMALL ENTITY

Reason for withdrawal from issue

○ One or more claims are unpatentable

◉ Consideration of a request for continued examination (RCE) (List of Required Documents and Fees)

○ Applicant hereby expressly abandons the instant application (any attorney/agent signing for this reason must have power of attorney pursuant to 37 CFR 1.32(b)).

RCE request,submission, and fee.

☐ I certify, in accordance with 37 CFR 1.4(d)(4) that : The RCE request ,submission, and fee have already been filed in the above-identified application on

☒ Are attached.

THIS PORTION MUST BE COMPLETED BY THE SIGNATORY OR SIGNATORIES

I certify, in accordance with 37 CFR 1.4(d)(4) that I am:

◉ An attorney or agent registered to practice before the Patent and Trademark Office who has been given power of attorney in this application.

○ An attorney or agent registered to practice before the Patent and Trademark Office, acting in a representative capacity.

○ A sole inventor

○ A joint inventor; I certify that I am authorized to sign this submission on behalf of all of the inventors

○ A joint inventor; all of whom are signing this e-petition

○ The assignee of record of the entire interest that has properly made itself of record pursuant to 37 CFR 3.71

Signature	/Malcolm J. MacDonald/
Name	Malcolm John MacDonald
Registration Number	40250

UNITED STATES PATENT AND TRADEMARK OFFICE

Commissioner for Patents
United States Patent and Trademark Office
P.O. Box 1450
Alexandria, VA 22313-1450
www.uspto.gov

Decision Date : February 15, 2012

In re Application of :

Gabriel KALLABIS

DECISION ON PETITION

UNDER CFR 1.313(c)(2)

Application No : 12541212

Filed : 14-Aug-2009

Attorney Docket No : 09057

This is an electronic decision on the petition under 37 CFR 1.313(c)(2), filed February 15, 2012 , to withdraw the above-identified application from issue after payment of the issue fee.

The petition is **GRANTED.**

The above-identified application is withdrawn from issue for consideration of a submission under 37 CFR 1.114 (request for continued examination). See 37 CFR 1.313(c)(2).

Petitioner is advised that the issue fee paid in this application cannot be refunded. If, however, this application is again allowed, petitioner may request that it be applied towards the issue fee required by the new Notice of Allowance.

Telephone inquiries concerning this decision should be directed to the Patent Electronic Business Center (EBC) at 866-217-9197.

This application file is being referred to Technology Center AU 2841 for processing of the request for continuing examination under 37 CFR 1.114 .

Office of Petitions

UNITED STATES PATENT AND TRADEMARK OFFICE

Commissioner for Patents
United States Patent and Trademark Office
P.O. Box 1450
Alexandria, VA 22313-1450
www.uspto.gov

In re Application of
William H. Eby

Application No. 12541312

Filed: August 14,2009

Attorney Docket No. 1421-395

:DECISION ON PETITION TO MAKE SPECIAL
:UNDER 37 CFR 1.102(c)(1)

This is a decision on the electronic petition under 37 CFR 1.102 (c)(1), filed 09-MAY-2011 to make the above-identified application special based on applicant's age as set forth in MPEP § 708.02, Section IV.

The petition is **GRANTED**.

A grantable petition to make an application special under 37 CFR 1.102(c)(1), MPEP § 708.02, Section IV: Applicant's Age must include a statement by applicant or a registered practitioner having evidence that applicant is at least 65 years of age. No fee is required.

Accordingly, the above-identified application has been accorded "special" status and will be taken up for action by the examiner upon the completion of all pre-examination processing.

Telephone inquiries concerning this electronic decision should be directed to the Electronic Business Center at 866-217-9197.

All other inquiries concerning either the examination or status of the application should be directed to the Technology Center.

Doc code : PET.OP.AGE
Description : Petition to make special based on Age/Health

PTO/SB/130 (07-09)
Approved for use through 07/31/2012. OMB 0651- 0031
U.S. Patent and Trademark Office; U.S. DEPARTMENT OF COMMERCE
Under the Paperwork Reduction Act of 1995, no persons are required to respond to a collection of information unless it contains a valid OMB control number

PETITION TO MAKE SPECIAL BASED ON AGE FOR ADVANCEMENT OF EXAMINATION UNDER 37 CFR 1.102(c)(1)

Application Information

Application Number	12/541,312	Confirmation Number	3103	Filing Date	2009-08-14
Attorney Docket Number (optional)	1421-395	Art Unit	1638	Examiner	Cathy Kingdon Worley
First Named Inventor	WILLIAM H. EBY				
Title of Invention	SOYBEAN CULTIVAR 88220415				

Attention: Office of Petitions
An application may be made special for advancement of examination upon filing of a petition showing that the applicant is 65 years of age, or more. No fee is required with such a petition. See 37 CFR 1.102(c)(1) and MPEP 708.02 (IV).

APPLICANT HEREBY PETITIONS TO MAKE SPECIAL FOR ADVANCEMENT OF EXAMINATION IN THIS APPLICATION UNDER 37 CFR 1.102(c)(1) and MPEP 708.02 (IV) ON THE BASIS OF THE APPLICANT'S AGE.

A grantable petition requires one of the following items:
(1) Statement by one named inventor in the application that he/she is 65 years of age, or more; or
(2) Certification by a registered attorney/agent having evidence such as a birth certificate, passport, driver's license, etc. showing one named inventor in the application is 65 years of age, or more.

Name of Inventor who is 65 years of age, or older

Given Name	Middle Name	Family Name	Suffix
William	H.	EBY	

A signature of the applicant or representative is required in accordance with 37 CFR 1.33 and 10.18.
Please see 37 CFR 1.4(d) for the format of the signature.

Select (1) or (2) :

○ (1) I am an inventor in this application and I am 65 years of age, or more.

● (2) I am an attorney or agent registered to practice before the Patent and Trademark Office, and I certify that I am in possession of evidence, and will retain such in the application file record, showing that the inventor listed above is 65 years of age, or more.

Signature	/Robert J. Jondle/	Date (YYYY-MM-DD)	2011-05-09
Name	Robert J. Jondle	Registration Number	33915

PTO/SB/130 (07-09)
Approved for use through 07/31/2012. OMB 0651- 0031
U.S. Patent and Trademark Office; U.S. DEPARTMENT OF COMMERCE
Under the Paperwork Reduction Act of 1995, no persons are required to respond to a collection of information unless it contains a valid OMB control number

Privacy Act Statement

The Privacy Act of 1974 (P.L. 93-579) requires that you be given certain information in connection with your submission of the attached form related to a patent application or patent. Accordingly, pursuant to the requirements of the Act, please be advised that: (1) the general authority for the collection of this information is 35 U.S.C. 2(b)(2); (2) furnishing of the information solicited is voluntary; and (3) the principal purpose for which the information is used by the U.S. Patent and Trademark Office is to process and/or examine your submission related to a patent application or patent. If you do not furnish the requested information, the U.S. Patent and Trademark Office may not be able to process and/or examine your submission, which may result in termination of proceedings or abandonment of the application or expiration of the patent.

The information provided by you in this form will be subject to the following routine uses:

1. The information on this form will be treated confidentially to the extent allowed under the Freedom of Information Act (5 U.S.C. 552) and the Privacy Act (5 U.S.C. 552a). Records from this system of records may be disclosed to the Department of Justice to determine whether the Fr eedom of Information Act requires disclosure of these records.

2. A record from this system of records may be disclosed, as a routine use, in the course of presenting evidence to a court, magistrate, or administrative tribunal, including disclosures to opposing counsel in the course of settlement negotiations.

3. A record in this system of records may be disclosed, as a routine use, to a Member of Congress submitting a request involving an individual, to whom the record pertains, when the individual has requested assistance from the Member with respect to the subject matter of the record.

4. A record in this system of records may be disclosed, as a routine use, to a contractor of the Agency having need for the information in order to perform a contract. Recipients of information shall be required to comply with the requirements of the Privacy Act of 1974, as amended, pursuant to 5 U.S.C. 552a(m).

5. A record related to an International Application filed under the Patent Cooperation Treaty in this system of records may be disclosed, as a routine use, to the International Bureau of the World Intellectual Property Organization, pursuant to the Patent Cooperation Treaty.

6. A record in this system of records may be disclosed, as a routine use, to another federal agency for purposes of National Security review (35 U.S.C. 181) and for review pursuant to the Atomic Energy Act (42 U.S.C. 218(c)).

7. A record from this system of records may be disclosed, as a routine use, to the Administrator, General Services, or his/her designee, during an inspection of records conducted by GSA as part of that agency's responsibility to recommend improvements in records management practices and programs, under authority of 44 U.S.C. 2904 and 2906. Such disclosure shall be made in accordance with the GSA regulations governing inspection of records for this purpose, and any other relevant (i.e., GSA or Commerce) directive. Such disclosure shall not be used to make determinations about indivi duals.

8. A record from this system of records may be disclosed, as a routine use, to the public after either publication of the application pursuant to 35 U.S.C. 122(b) or issuance of a patent pursuant to 35 U.S.C. 151. Further, a record may be disclosed, subject to the limitations of 37 CFR 1.14, as a routine use, to the public if the record was filed in an application which became abandoned or in which the proceedings were terminated and which application is referenced by either a published application, an application open to public inspections or an issued patent.

9. A record from this system of records may be disclosed, as a routine use, to a Federal, State, or local law enforcement agency, if the USPTO becomes aware of a violation or potential violation of law or regulation.

UNITED STATES PATENT AND TRADEMARK OFFICE

UNITED STATES DEPARTMENT OF COMMERCE
United States Patent and Trademark Office
Address: COMMISSIONER FOR PATENTS
P.O. Box 1450
Alexandria, Virginia 22313-1450
www.uspto.gov

APPLICATION NO.	FILING DATE	FIRST NAMED INVENTOR	ATTORNEY DOCKET NO.	CONFIRMATION NO.
12/541,312	08/14/2009	William H. Eby	1421-395	3103

32905 7590 07/21/2011
JONDLE & ASSOCIATES, P.C.
858 HAPPY CANYON ROAD, SUITE 230
CASTLE ROCK, CO 80108

EXAMINER
WORLEY, CATHY KINGDON

ART UNIT	PAPER NUMBER
1638	

NOTIFICATION DATE	DELIVERY MODE
07/21/2011	ELECTRONIC

Please find below and/or attached an Office communication concerning this application or proceeding.

The time period for reply, if any, is set in the attached communication.

Notice of the Office communication was sent electronically on above-indicated "Notification Date" to the following e-mail address(es):

JondleOA@jondlelaw.com

UNITED STATES PATENT AND TRADEMARK OFFICE

JUL 21 2011

Commissioner for Patents
United States Patent and Trademark Office
P.O. Box 1450
Alexandria, VA 22313-1450
www.uspto.gov

JONDLE & ASSOCIATES P.C.
858 HAPPY CANYON ROAD SUITE 230
CASTLE ROCK CO 80108

In re Application of:	:
William H. Eby	:
Serial No.: 12/541,312	: PETITION DECISION
Filed: August 14, 2009	:
Attorney Docket No.: **1421-395**	

This is in response to the petition under 37 CFR § 1.59(b), filed July 12, 2011, to expunge information from the above identified application. This application has not been allowed.

Petitioner requests that the Reply to Request for Information under 37 CFR 1.105, and attachment thereto, submitted to the Patent Office on July 12, 2011, be expunged from the record. Petitioner states either: (A) that the information contains trade secret material, proprietary material and/or material that is subject to a protective order which has not been made public; or (B) that the information submitted was unintentionally submitted and the failure to obtain its return would cause irreparable harm to the party who submitted the information or to the party in interest on whose behalf the information was submitted, and the information has not otherwise been made public. The petition fee set forth in 37 CFR § 1.17(g) has been paid.

This is an examined application which is currently under non-final rejection. As such the information provided has been reviewed, in part, but proceedings in the application have not been terminated. As stated in M.P.E.P. 724, upon allowance or other action closing prosecution in an application, petition may be made for return of Proprietary information. The information cannot be expunged at this time.

The petition is **DISMISSED**. Petitioner may resubmit the petition subsequent to a Notice of Allowability or *ex parte Quayle* action being mailed in the application. No additional petition fee will be required at that time.

Should there be any questions about this decision please contact Marianne C. Seidel by letter addressed to Director, TC 1600, at the address listed above, or by telephone at 571-272-0584 or by facsimile sent to the general Office facsimile number, 571-273-8300.

/MC Seidel/
Marianne C. Seidel, Quality Assurance Specialist
Technology Center 1600

UNITED STATES PATENT AND TRADEMARK OFFICE

UNITED STATES DEPARTMENT OF COMMERCE
United States Patent and Trademark Office
Address: COMMISSIONER FOR PATENTS
P.O. Box 1450
Alexandria, Virginia 22313-1450
www.uspto.gov

APPLICATION NO.	FILING DATE	FIRST NAMED INVENTOR	ATTORNEY DOCKET NO.	CONFIRMATION NO.
12/541,312	08/14/2009	William H. Eby	1421-395	3103

32905 7590 09/29/2011
JONDLE & ASSOCIATES, P.C.
858 HAPPY CANYON ROAD, SUITE 230
CASTLE ROCK, CO 80108

EXAMINER
WORLEY, CATHY KINGDON

ART UNIT	PAPER NUMBER
1638	

NOTIFICATION DATE	DELIVERY MODE
09/29/2011	ELECTRONIC

Please find below and/or attached an Office communication concerning this application or proceeding.

The time period for reply, if any, is set in the attached communication.

Notice of the Office communication was sent electronically on above-indicated "Notification Date" to the following e-mail address(es):

JondleOA@jondlelaw.com

UNITED STATES PATENT AND TRADEMARK OFFICE

Commissioner for Patents
United States Patent and Trademark Office
P.O. Box 1450
Alexandria, VA 22313-1450
www.uspto.gov

JONDLE & ASSOCIATES P.C.
858 HAPPY CANYON ROAD SUITE 230
CASTLE ROCK CO 80108

In re Application of:	
William H. Eby	PETITION DECISION
Serial No.: 12/541,312	
Filed: August 14, 2009	
Attorney Docket No.: **1421-395**	

This is in response to the renewed petition under 37 CFR § 1.59(b), filed September 26, 2011, to expunge information from the above identified application. This application has been allowed.

Petitioner requests that the material submitted to the Patent Office on July 12, 2011 be expunged from the record. Petitioner states either: (A) that the information contains trade secret material, proprietary material and/or material that is subject to a protective order which has not been made public; or (B) that the information submitted was unintentionally submitted and the failure to obtain its return would cause irreparable harm to the party who submitted the information or to the party in interest on whose behalf the information was submitted, and the information has not otherwise been made public. The petition fee set forth in 37 CFR § 1.17(g) has been paid.

The reasons set forth in this petition establishes to the satisfaction of the Director that expungement of the information is appropriate. The file entry for this document has been closed and as such the document is no longer publicly available, which is the IFW equivalent to removal of a paper document from a paper file wrapper.

Therefore, petitioner's petition is GRANTED.

Should there be any questions about this decision please contact Marianne C. Seidel by letter addressed to Director, TC 1600, at the address listed above, or by telephone at 571-272-0584 or by facsimile sent to the general Office facsimile number, 571-273-8300.

/MC Seidel/
Marianne C. Seidel, Quality Assurance Specialist
Technology Center 1600

UNITED STATES PATENT AND TRADEMARK OFFICE

Commissioner for Patents
United States Patent and Trademark Office
P.O. Box 1450
Alexandria, VA 22313-1450
www.uspto.gov

SCHWEGMAN, LUNDBERG & WOESSNER, P.A.
P.O. BOX 2938
MINNEAPOLIS MN 55402

MAILED
SEP 30 2010
OFFICE OF PETITIONS

In re Application of	:	
Fransson et al.	:	
Application No. 12/541,323	:	DECISION GRANTING STATUS
Filed: August 14, 2009	:	STATUS UNDER 37 CFR 1.47(a)
Attorney Docket No. 1880.106US3	:	

This is in response to the renewed petition under 37 CFR 1.47(a), filed August 17, 2010.

The petition is **GRANTED**.

Petitioner has shown that the nonsigning legal representative, Carla Hara Fransson, has refused to join in the filing of the above-identified application.

The above-identified application and papers have been reviewed and found in compliance with 37 CFR 1.47(a). This application is hereby accorded Rule 1.47(a) status. As provided in Rule 1.47(c), this Office will forward notice of this application's filing to the nonsigning inventor at the address given in the petition. Notice of the filing of this application will also be published in the Official Gazette.

Telephone inquiries regarding this decision should be directed to Petitions Examiner Liana Walsh at (571) 272-3206.

This matter is being referred to Technology Center AU 2831 for examination on the merits.

/dab/
David Bucci
Petitions Examiner
Office of Petitions

UNITED STATES PATENT AND TRADEMARK OFFICE

Commissioner for Patents
United States Patent and Trademark Office
P.O. Box 1450
Alexandria, VA 22313-1450
www.uspto.gov

MAILED

SEP 30 2010

OFFICE OF PETITIONS

CARLA HARA FRANSSON
100 FALVEY LANE
CLEVELAND, TX 77328

In re Application of	:	
Fransson et al.	:	
Application No. 12/541,323	:	ON PETITION
Filed: August 14, 2009	:	
Attorney Docket No. 1880.106US3	:	

Mrs. Fransson,

You are named as a the legal representative of a joint inventor in the above identified United States patent application, filed under the provisions of 35 U.S.C. 116 (United States Code), and 37 CFR 1.47(a), Rules of Practice in Patent Cases. Should a patent be granted on the application you will be designated therein as a joint inventor.

As a named inventor you are entitled to inspect any paper in the file wrapper of the application, order copies of all or any part thereof (at a prepaid cost per 37 CFR 1.19) or make your position of record in the application. Alternatively, you may arrange to do any of the preceding through a registered patent attorney or agent presenting written authorization from you. If you care to join in the application, counsel of record (see below) would presumably assist you. Joining in the application would entail the filing of an appropriate oath or declaration by you pursuant to 37 CFR 1.63.

Telephone inquiries regarding this communication should be directed to Petitions Examiner Liana Walsh at (571) 272-3206. Requests for information regarding your application should be directed to the File Information Unit at (703) 308-2733. Information regarding how to pay for and order a copy of the application, or a specific paper in the application, should be directed to Certification Division at (703) 308-9726 or 1 (800) 972-6382 (outside the Washington D.C. area).

/dab/
David Bucci
Petitions Examiner
Office of Petitions

UNITED STATES PATENT AND TRADEMARK OFFICE

UNITED STATES DEPARTMENT OF COMMERCE
United States Patent and Trademark Office
Address: COMMISSIONER FOR PATENTS
P.O. Box 1450
Alexandria, Virginia 22313-1450
www.uspto.gov

APPLICATION NO.	FILING DATE	FIRST NAMED INVENTOR	ATTORNEY DOCKET NO.	CONFIRMATION NO.
12/541,359	08/14/2009	Kai-Chi Lin	US22825	3203

7590 02/17/2011

Altis Law Group, Inc.
ATTN: Steven Reiss
288 SOUTH MAYO AVENUE
CITY OF INDUSTRY, CA 91789

EXAMINER
KOONTZ, TAMMY J

ART UNIT	PAPER NUMBER
3974	

NOTIFICATION DATE	DELIVERY MODE
02/17/2011	ELECTRONIC

DECISION GRANTING PETITION UNDER 37 CFR 1.138(d)

The declaration of express abandonment is recognized

This is in response to the petition under 37 CFR 1.138(d), requesting for a refund of any previously paid search fee and excess claims fee in the above-identified application.

The petition is granted.

The express abandonment is recognized. Any previously paid search fee and excess claims fee are hereby refunded.

Telephone inquiries should be directed to the Office of Data Management at (571) 272-4200.

Betty Powell

Patent Publication Branch
Office of Data Management

FORM PET651G (Rev. 08/07)

UNITED STATES PATENT AND TRADEMARK OFFICE

UNITED STATES DEPARTMENT OF COMMERCE
United States Patent and Trademark Office
Address: COMMISSIONER FOR PATENTS
P.O. Box 1450
Alexandria, Virginia 22313-1450
www.uspto.gov

APPLICATION NO.	FILING DATE	FIRST NAMED INVENTOR	ATTORNEY DOCKET NO.	CONFIRMATION NO.
12/541,360	08/14/2009	JYH-LONG CHERN	US23739	3207

7590 02/17/2011

Altis Law Group, Inc.
ATTN: Steven Reiss
288 SOUTH MAYO AVENUE
CITY OF INDUSTRY, CA 91789

EXAMINER
TSO, LAURA K

ART UNIT	PAPER NUMBER
2875	

NOTIFICATION DATE	DELIVERY MODE
02/17/2011	ELECTRONIC

DECISION GRANTING PETITION UNDER 37 CFR 1.138(d)

The declaration of express abandonment is recognized

This is in response to the petition under 37 CFR 1.138(d), requesting for a refund of any previously paid search fee and excess claims fee in the above-identified application.

The petition is granted.

The express abandonment is recognized. Any previously paid search fee and excess claims fee are hereby refunded.

Telephone inquiries should be directed to the Office of Data Management at (571) 272-4200.

Betty Powell

Patent Publication Branch
Office of Data Management

FORM PET651G (Rev. 08/07)

UNITED STATES PATENT AND TRADEMARK OFFICE

UNITED STATES DEPARTMENT OF COMMERCE
United States Patent and Trademark Office
Address: COMMISSIONER FOR PATENTS
P.O. Box 1450
Alexandria, Virginia 22313-1450
www.uspto.gov

APPLICATION NO.	FILING DATE	FIRST NAMED INVENTOR	ATTORNEY DOCKET NO.	CONFIRMATION NO.
12/541,413	08/14/2009	T. William Hutchens	91047-801384	3315

20350 7590 08/25/2011
KILPATRICK TOWNSEND & STOCKTON LLP
TWO EMBARCADERO CENTER
EIGHTH FLOOR
SAN FRANCISCO, CA 94111-3834

EXAMINER
CHIN, CHRISTOPHER L

ART UNIT	PAPER NUMBER
1641	

NOTIFICATION DATE	DELIVERY MODE
08/25/2011	ELECTRONIC

Please find below and/or attached an Office communication concerning this application or proceeding.

The time period for reply, if any, is set in the attached communication.

Notice of the Office communication was sent electronically on above-indicated "Notification Date" to the following e-mail address(es):

Docket@kilpatricktownsend.com
ipefiling@kilpatricktownsend.com
jlhice@kilpatrick.foundationip.com

UNITED STATES PATENT AND TRADEMARK OFFICE

Commissioner for Patents
United States Patent and Trademark Office
P.O. Box 1450
Alexandria, VA 22313-1450
www.uspto.gov

**KILPATRICK TOWNSEND &
STOCKTON LLP
TWO EMBARCADERO CENTER
EIGHTH FLOOR
SAN FRANCISCO CA 94111-3834**

In re Application of	
TATEMATSU et al.	**: DECISION ON REQUEST TO**
Application No.: 12/541413	**: PARTICIPATE IN THE PATENT**
Filed: 11 May 2009	**: PROSECUTION HIGHWAY**
Attorney Docket No.: 91047-801384	**: PROGRAM AND PETITION**
For: RETENTATE	**: TO MAKE SPECIAL UNDER**
CHROMATOGRAPHY AND PROTEIN	**: 37 CFR 1.102(a)**
CHIP ARRAYS WITH APPLICATIONS	
IN BIOLOGY AND MEDICINE	

This is a decision on the request to participate in the Patent Prosecution Highway (PPH) program and the petition under 37 CFR 1.102(a), filed 15 July 2011, to make the above-identified application special.

The request and petition are **DISMISSED** as moot as the application has been allowed.

Telephone inquiries concerning this decision should be directed to Colleen Dunn at 571-272-1170.

All other inquiries concerning the examination or status of the application is accessible in the PAIR system at http://www.uspto.gov/ebc/index.html.

/Colleen Dunn/

Colleen Dunn
Quality Assurance Specialist
Technology Center 2800

UNITED STATES PATENT AND TRADEMARK OFFICE

Commissioner for Patents
United States Patent and Trademark Office
P.O. Box 1450
Alexandria, VA 22313-1450
www.uspto.gov

OBLON, SPIVAK, MCCLELLAND MAIER & NEUSTADT, L.L.P.
1940 DUKE STREET
ALEXANDRIA VA 22314

MAILED

DEC 06 2010

OFFICE OF PETITIONS

In re Application of	:	
Haruhiko Koyama, et al.	:	
Application No. 12/541,457	:	DECISION GRANTING PETITION
Filed: August 14, 2009	:	UNDER 37 CFR 1.313(c)(2)
Attorney Docket No. 346383US2S CONT	:	

This is a decision on the petition under 37 CFR 1.313(c)(2), filed, December 6, 2010 to withdraw the above-identified application from issue after payment of the issue fee.

The petition is **GRANTED**.

The above-identified application is withdrawn from issue for consideration of a submission under 37 CFR 1.114 (request for continued examination). *See* 37 CFR 1.313(c)(2).

Petitioner is advised that the issue fee paid on November 8, 2010 cannot be refunded. If, however, this application is again allowed, petitioner may request that it be applied towards the issue fee required by the new Notice of Allowance.[1]

Telephone inquiries should be directed to Terri Johnson at (571) 272-2991.

This application is being referred to Technology Center AU 2829 for processing of the request for continued examination under 37 CFR 1.114 and for consideration of the concurrently filed information disclosure statement.

/Terri Johnson/
Terri Johnson
Petitions Examiner
Office of Petitions

---

[1] *The request to apply the issue fee to the new Notice may be satisfied by completing and returning the new Part B – Fee(s) Transmittal Form (along with any balance due at the time of submission). Petitioner is advised that the Issue Fee Transmittal Form* ***must*** *be completed and timely submitted to avoid abandonment of the application.*

UNITED STATES PATENT AND TRADEMARK OFFICE

Commissioner for Patents
United States Patent and Trademark Office
P.O. Box 1450
Alexandria, VA 22313-1450
www.the Office.gov

HODGSON RUSS LLP
THE GUARANTY BUILDING
140 PEARL STREET
SUITE 100
BUFFALO NY 14202-4040

MAILED

JAN 21 2011

OFFICE OF PETITIONS

In re Application of	:	
Al-Samadi	:	
Application No. 12/541,482	:	DECISION
Filed: 14 August, 2009	:	
Attorney Docket No. (None)	:	

This is a decision on the petition filed on 6 August, 2010, treated akin to a petition pursuant to 37 C.F.R. §1.137(b) to accept an unintentionally delayed notification to the U.S. Patent and Trademark Office (the Office) of the filing of an application in a foreign country or under a multinational treaty that requires publication of applications eighteen-months after filing. (*See* 37 C.F.R. §1.137(f).)

The petition as considered under 37 C.F.R. §1.137(b) is **GRANTED**.

As to Allegations of
Failure to Notice

The requirements of a grantable petition pursuant to 37 C.F.R. §1.137(f) are the petition and fee therefor, a reply in the form of the Notice of subsequent foreign/international filing (in an eighteen-month publication country) and the date thereof, and a proper statement of unintentional delay under the regulation.

BACKGROUND

Petitioner states that the instant nonprovisional application is the subject of an application filed in an eighteen-month publication country on *15 August, 2009*. However, the Office was unintentionally not notified of this filing within 45 days subsequent to the filing of the subject application in an eighteen-month publication country. Therefore, pursuant to the provisions of 35 U.S.C. §122(b)(2)(B)(iii) and 37 C.F.R. §1.213(c), Petitioner failed to timely notify the Office

of the filing of a counterpart application in a foreign country or under a multilateral international agreement that requires publication of applications 18 months after filing.

A petition under 37 C.F.R. §1.137(b) to accept an unintentionally delayed notification to the Office of the filing of a counterpart application in an eighteen-month publication country must be accompanied by:

(1) the required reply which is met by the notification of such filing in a foreign country or under a multinational treaty;
(2) the petition fee as set forth in 37 C.F.R. §1.17(m); and
(3) a statement that the entire delay in filing the required reply from the due date of the reply until the filing of a grantable petition was unintentional.

The instant petition has been found to be in compliance with 37 C.F.R. §1.137(b). Accordingly, the failure to timely notify the Office of a foreign or international filing within 45 days as provided by 35 U.S.C. §122(b)(2)(B)(iii) is accepted as having been unintentionally delayed.

The previous Request and Certification under 35 U.S.C. §122(b)(2)(B)(i) has been rescinded. A Notice Regarding Rescission of Nonpublication Request which sets forth the projected publication *30 December, 2010.*

The availability of applications and application papers online to applicants/practitioners who diligently associate their Customer Number with the respective application(s) now provides an applicant/practitioner on-demand information as to events/transactions in an application.

Out of an abundance of caution, Petitioners always are reminded that those registered to practice and all others who make representations before the Office **must** inquire into the underlying facts of representations made to the Office and support averments with the appropriate documentation–since all owe to the Office the continuing duty to disclose.[1]

As to Allegations of
Failure to Notice

It appears that the requirements under 37 C.F.R. §1.137(f) have been satisfied.

[1] See supplement of 17 June, 1999. The Patent and Trademark Office is relying on Petitioner's duty of candor and good faith and accepting a statement made by Petitioner. See Changes to Patent Practice and Procedure, 62 Fed. Reg. at 53160 and 53178, 1203 Off. Gaz. Pat. Office at 88 and 103 (responses to comments 64 and 109)(applicant obligated under 37 C.F.R. §10.18 to inquire into the underlying facts and circumstances when providing statements to the Patent and Trademark Office).

CONCLUSION

Accordingly, the petition pursuant to 37 C.F.R. §1.137(f) and considered under 37 C.F.R. §1.137(b) is **granted**.

This application is being released to Technology Center/AU 1777 for further processing in due course.

Petitioner may find it beneficial to view Private PAIR within a fortnight of the instant decision to ensure that the decision has been acknowledged by the Technology Center/AU. It is noted that all inquiries with regard to substantive examination need be directed to the Technology Center/AU where change of status must be effected—that does not occur in the Office of Petitions.

Telephone inquiries regarding this decision may be directed to the undersigned at (571) 272-3214—it is noted, however, that all practice before the Office is in writing (see: 37 C.F.R. §1.2[2]) and the proper authority for action on any matter in this regard are the statutes (35 U.S.C.), regulations (37 C.F.R.) and the commentary on policy (MPEP). Therefore, no telephone discussion may be controlling or considered authority for Petitioner's action(s).

/John J. Gillon, Jr./
John J. Gillon, Jr.
Senior Attorney
Office of Petitions

ATTACHMENT: Notice Regarding Rescission of Nonpublication Request

---

[2] The regulations at 37 C.F.R. §1.2 provide:
§1.2 Business to be transacted in writing.
All business with the Patent and Trademark Office should be transacted in writing. The personal attendance of applicants or their attorneys or agents at the Patent and Trademark Office is unnecessary. The action of the Patent and Trademark Office will be based exclusively on the written record in the Office. No attention will be paid to any alleged oral promise, stipulation, or understanding in relation to which there is disagreement or doubt.

UNITED STATES PATENT AND TRADEMARK OFFICE

UNITED STATES DEPARTMENT OF COMMERCE
United States Patent and Trademark Office
Address: COMMISSIONER FOR PATENTS
P.O. Box 1450
Alexandria, Virginia 22313-1450
www.uspto.gov

APPLICATION NUMBER	FILING OR 371(C) DATE	FIRST NAMED APPLICANT	ATTY. DOCKET NO./TITLE
12/541,482	08/14/2009	Riad Al-Samadi	

CONFIRMATION NO. 3463

NONPUBLICATION RESCISSION LETTER

26712
HODGSON RUSS LLP
THE GUARANTY BUILDING
140 PEARL STREET
SUITE 100
BUFFALO, NY 14202-4040

OC000000045560213

Date Mailed: 01/20/2011

Communication Regarding Rescission Of Nonpublication Request and/or Notice of Foreign Filing

Applicant's rescission of the previously-filed nonpublication request and/or notice of foreign filing is acknowledged. The paper has been reflected in the Patent and Trademark Office's (USPTO's) computer records so that the earliest possible projected publication date can be assigned.

The projected publication date is 04/28/2011.

If applicant rescinded the nonpublication request before or on the date of "foreign filing,"[1] then no notice of foreign filing is required.

If applicant foreign filed the application after filing the above application and before filing the rescission, and the rescission did not also include a notice of foreign filing, then a notice of foreign filing (not merely a rescission) is required to be filed within 45 days of the date of foreign filing. See 35 U.S.C. § 122(b)(2)(B)(iii), and Clarification of the United States Patent and Trademark Office's Interpretation of the Provisions of 35 U.S.C. § 122(b)(2)(B)(ii)-(iv), 1272 Off. Gaz. Pat. Office 22 (July 1, 2003).

If a notice of foreign filing is required and is not filed within 45 days of the date of foreign filing, then the application becomes abandoned pursuant to 35 U.S.C. § 122(b)(2)(B)(iii). In this situation, applicant should either file a petition to revive or notify the Office that the application is abandoned. See 37 CFR 1.137(f). Any such petition to revive will be forwarded to the Office of Petitions for a decision. Note that the filing of the petition will not operate to stay any period of reply that may be running against the application.

Questions regarding petitions to revive should be directed to the Office of Petitions at (571) 272-3282.

[1] Note, for purpose of this notice, that "foreign filing" means "filing an application directed to the same invention in another country, or under a multilateral international agreement, that requires publication of applications 18 months after filing".

/jjgillon jr/

Office of Data Management, Application Assistance Unit (571) 272-4000, or (571) 272-4200, or 1-888-786-0101

UNITED STATES PATENT AND TRADEMARK OFFICE

Commissioner for Patents
United States Patent and Trademark Office
P.O. Box 1450
Alexandria, VA 22313-1450
www.uspto.gov

MICHAEL N. HAYNES
1341 HUNTERSFIELD CLOSE
KESWICK VA 22947

MAILED

OCT 04 2011

OFFICE OF PETITIONS

In re Patent No. 7,893,413 :
Issue Date: February 22, 2011 :
Application No.: 12/541,610 : NOTICE
Filed: August 14, 2009 :
Attorney Docket No.: 1021-045 :

This is a notice regarding your request for acceptance of a fee deficiency submission under 37 CFR 1.28(c), filed September 20, 2011.

On September 1, 1998, the Court of Appeals for the Federal Circuit held that 37 CFR 1.28(c) is the sole provision governing the time for correction of the erroneous payment of the issue fee as a small entity. See DH Technology v. Synergystex International, Inc. 154 F.3d 1333, 47 USPQ2d 1865 (Fed. Cir. Sept. 1, 1998).

The Office no longer investigates or rejects original or reissue applications under 37 CFR 1.56. 1098 Off. Gaz. Pat. Office 502 (January 3, 1989). Therefore, nothing in this Notice is intended to imply that an investigation was done.

Your fee deficiency submission under 37 CFR 1.28 is hereby **ACCEPTED**. The change of status to a large entity has been entered and made of record.

This patent is no longer entitled to small entity status. Accordingly, all future fees paid in this patent must be paid at the large entity rate.

This file is being forwarded to the Files Repository.

Telephone inquiries concerning this matter may be directed to the undersigned at (571) 272-3230.

Shirene Willis Brantley
Petitions Attorney
Office of Petitions

UNITED STATES PATENT AND TRADEMARK OFFICE

Commissioner for Patents
United States Patent and Trademark Office
P.O. Box 1450
Alexandria, VA 22313-1450
www.uspto.gov

Decision Date : March 26, 2012

In re Application of :

Mark McHenry

Application No : 12541616

Filed : 14-Aug-2009

Attorney Docket No : 027484-001210US

DECISION ON REQUEST TO WITHDRAW AS ATTORNEY/AGENTOF RECORD

This is an electronic decision on the Request to Withdraw as attorney or agent of record under 37 CFR § 1.36(b), filed March 26, 2012

The request is **APPROVED.**

The request was signed by Richard S. Meyer (registration no. 32541) on behalf of all attorneys/agents associated with Customer Number 20350 . All attorneys/agents associated with Cusotmer Number 20350 have been withdrawn.

Since there are no remaining attorneys of record, all future communications from the Office will be directed to the first named inventor or assignee that has properly made itself of record pursuant to 37 CFR 3.71, with correspondence address:

Name	Shared Spectrum Company
Name2	
Address 1	1595 Spring Hill Road, Suite 700
Address 2	
City	Vienna
State	VA
Postal Code	22182
Country	US

As a reminder, requester is required to inform the first named inventor or assignee that has properly made itself of record pursuant to 37 CFR 3.71 of the electronically processed petition.

Telephone inquiries concerning this decision should be directed to the Patent Electronic Business Center (EBC) at 866-217-9197.

Office of Petitions

Doc Code: PET.AUTO **Document Description: Petition automatically granted by EFS-Web**	PTO/SB/83 U.S. Patent and Trademark Office Department of Commerce

Electronic Petition Request	**REQUEST FOR WITHDRAWAL AS ATTORNEY OR AGENT AND CHANGE OF CORRESPONDENCE ADDRESS**
Application Number	12541616
Filing Date	14-Aug-2009
First Named Inventor	Mark McHenry
Art Unit	2618
Examiner Name	DAVID BILODEAU
Attorney Docket Number	027484-001210US
Title	Method and System for Dynamic Spectrum Access

◉ Please withdraw me as attorney or agent for the above identified patent application and the practitioners of record associated with Customer Number: 20350

The reason(s) for this request are those described in 37 CFR:

10.40(b)(4)

Certifications

☒ I/We have given reasonable notice to the client, prior to the expiration of the response period, that the practitioner(s) intend to withdraw from employment

☒ I/We have delivered to the client or a duly authorized representative of the client all papers and property (including funds) to which the client is entitled

☒ I/We have notified the client of any responses that may be due and the time frame within which the client must respond

Change the correspondence address and direct all future correspondence to the first named inventor or assignee that has properly made itself of record pursuant to 37 CFR 3.71:

Name	Shared Spectrum Company
Address	1595 Spring Hill Road, Suite 700
City	Vienna
State	VA
Postal Code	22182
Country	US

I am authorized to sign on behalf of myself and all withdrawing practitioners.	
Signature	/Richard S. Meyer/
Name	Richard S. Meyer
Registration Number	32541

Doc Code: PET.AUTO **Document Description: Petition automatically granted by EFS-Web**	PTO/SB/83 U.S. Patent and Trademark Office Department of Commerce

Electronic Petition Request	**REQUEST FOR WITHDRAWAL AS ATTORNEY OR AGENT AND CHANGE OF CORRESPONDENCE ADDRESS**
Application Number	12541621
Filing Date	14-Aug-2009
First Named Inventor	Mark McHenry
Art Unit	2617
Examiner Name	INDER MEHRA
Attorney Docket Number	027484-001220US
Title	Method and System for Dynamic Spectrum Access Using Detection Periods

◉ Please withdraw me as attorney or agent for the above identified patent application and the practitioners of record associated with Customer Number: 20350

The reason(s) for this request are those described in 37 CFR:

10.40(b)(4)

Certifications

☒ I/We have given reasonable notice to the client, prior to the expiration of the response period, that the practitioner(s) intend to withdraw from employment

☒ I/We have delivered to the client or a duly authorized representative of the client all papers and property (including funds) to which the client is entitled

☒ I/We have notified the client of any responses that may be due and the time frame within which the client must respond

Change the correspondence address and direct all future correspondence to the first named inventor or assignee that has properly made itself of record pursuant to 37 CFR 3.71:

Name	Shared Spectrum Company
Address	1595 Spring Hill Road, Suite 700
City	Vienna
State	VA
Postal Code	22182
Country	US

I am authorized to sign on behalf of myself and all withdrawing practitioners.	
Signature	/Richard S. Meyer/
Name	Richard S. Meyer
Registration Number	32541

UNITED STATES PATENT AND TRADEMARK OFFICE

Commissioner for Patents
United States Patent and Trademark Office
P.O. Box 1450
Alexandria, VA 22313-1450
www.uspto.gov

Decision Date : March 26, 2012

In re Application of :

Mark McHenry

Application No : 12541621

Filed : 14-Aug-2009

Attorney Docket No : 027484-001220US

DECISION ON REQUEST TO WITHDRAW AS ATTORNEY/AGENTOF RECORD

This is an electronic decision on the Request to Withdraw as attorney or agent of record under 37 CFR § 1.36(b), filed March 26, 2012

The request is **APPROVED.**

The request was signed by Richard S. Meyer (registration no. 32541) on behalf of all attorneys/agents associated with Customer Number 20350 . All attorneys/agents associated with Cusotmer Number 20350 have been withdrawn.

Since there are no remaining attorneys of record, all future communications from the Office will be directed to the first named inventor or assignee that has properly made itself of record pursuant to 37 CFR 3.71, with correspondence address:

Name	Shared Spectrum Company
Name2	
Address 1	1595 Spring Hill Road, Suite 700
Address 2	
City	Vienna
State	VA
Postal Code	22182
Country	US

As a reminder, requester is required to inform the first named inventor or assignee that has properly made itself of record pursuant to 37 CFR 3.71 of the electronically processed petition.

Telephone inquiries concerning this decision should be directed to the Patent Electronic Business Center (EBC) at 866-217-9197.

Office of Petitions

UNITED STATES PATENT AND TRADEMARK OFFICE

Commissioner for Patents
United States Patent and Trademark Office
P.O. Box 1450
Alexandria, VA 22313-1450
www.uspto.gov

MAILED

SEP 17 2010

OFFICE OF PETITIONS

SMITH, GAMBRELL & RUSSELL
1130 CONNECTICUT AVENUE, N.W., SUITE 1130
WASHINGTON DC 20036

In re Application of Haas et al.	:	
Application No. 12/541,674	:	Decision Dismissing Petition
Filing Date: August 14, 2009	:	Under 37 CFR 1.78(a)(6)
Attorney Docket No. 032301.309DIV	:	

This is a decision on the petition under 37 CFR 1.78(a)(6), filed April 19, 2010, to accept an unintentionally delayed claim under 35 U.S.C. § 119(e) for the benefit of priority to a prior-filed provisional application.

The petition is **DISMISSED.**

A petition under 37 CFR 1.78(a)(6) is only applicable to those applications filed on or after November 29, 2000. Further, the petition is appropriate only after expiration of the period specified in 37 CFR 1.78(a)(5)(ii) and must be filed during the pendency of the nonprovisional application. In addition, the petition must be accompanied by:

(1) the reference required by 35 U.S.C. § 119(e) and 37 CFR 1.78(a)(5)(i) to the prior-filed application, unless previously submitted;
(2) the surcharge set forth in § 1.17(t); and
(3) a statement that the entire delay between the date the claim was due under 37 CFR 1.78(a)(5)(ii) and the date the claim was filed was unintentional. The Director may require additional information where there is a question whether the delay was unintentional.

As to item (1) above, the reference under 37 CFR 1.78(a)(5)(i) is improper.

Petitioner requests the first paragraph of the specification be amended as follows:

> This application is a divisional of our co-pending US patent application no. 10/669,978, filed September 24, 2003, which is relied on and incorporated herein by reference. <u>This application also claims the benefit of US patent application no. 60/414,327, filed September 30, 2002, expired.</u>

The instant application was filed several years after the date the provisional application was filed. Therefore, the instant application cannot *directly* claim the benefit of the provisional

application and the priority claim directly claiming the benefit of the provisional application is improper.

The Office notes, although the instant application cannot directly claim the benefit of the provisional application, the application can claim the benefit of the provisional application via intermediate Application No. 10/669,978.

If petitioners wish to add the priority claim, petitioners should file a renewed petition under 37 CFR 1.78(a)(3) and a proper substitute amendment.[1]

Further correspondence with respect to this matter should be addressed as follows:

By Internet: A request for reconsideration may be filed electronically using EFS Web.[2] Document Code "PET.OP" should be used if the request is filed electronically.

By mail: Mail Stop Petition
Commissioner for Patents
P.O. Box 1450
Alexandria, VA 22313-1450

By facsimile: (571) 273-8300
Attn: Office of Petitions

By hand: U.S. Patent and Trademark Office
Customer Service Window
Randolph Building
401 Dulany Street
Alexandria, VA 22314

Any questions concerning this matter may be directed to Steven Brantley at (571) 272-3203.

Charles Steven Brantley
Senior Petitions Attorney
Office of Petitions

[1] The claim for priority may also be made in an Application Data Sheet in compliance with 37 CFR 1.121 and 37 CFR 1.76(b)(5). 37 CFR 1.76(b)(5) states, "Providing [domestic priority] information in the application data sheet constitutes the specific reference required by 35 U.S.C. 119(e) or 120, and § 1.78(a)(2) or § 1.78(a)(5), and need not otherwise be made part of the specification." If an ADS if filed, please note MPEP 601.05 which states, "If no ADS was originally filed, but applicant wants to submit an ADS to correct, modify, or augment the original application data, the ADS, even though it is the first-filed ADS, must be titled 'Supplemental Application Data Sheet.'"

[2] General Information concerning EFS Web can be found at http://www.uspto.gov/patents/process/file/efs/index.jsp.

UNITED STATES PATENT AND TRADEMARK OFFICE

Commissioner for Patents
United States Patent and Trademark Office
P.O. Box 1450
Alexandria, VA 22313-1450
www.uspto.gov

SMITH, GAMBRELL & RUSSELL
1130 CONNECTICUT AVENUE, N.W., SUITE 1130
WASHINGTON DC 20036

MAILED
FEB 09 2011
OFFICE OF PETITIONS

In re Application of Haas et al.	:	
Application No. 12/541,674	:	Decision Granting Petition
Filing Date: August 14, 2009	:	Under 37 CFR 1.78(a)(6)
Attorney Docket No. 032301.309DIV	:	

This is a decision on the petition under 37 CFR 1.78(a)(6), filed September 30, 2010, to accept an unintentionally delayed claim under 35 U.S.C. §119(e) for the benefit of the prior-filed provisional application set forth in the concurrently filed amendment.

The petition is **GRANTED.**

A petition under 37 CFR 1.78(a)(6) is only applicable to those applications filed on or after November 29, 2000. Further, the petition is appropriate only after expiration of the period specified in 37 CFR 1.78(a)(5)(ii) and must be filed during the pendency of the nonprovisional application. In addition, the petition must be accompanied by:

(1) the reference required by 35 U.S.C. § 119(e) and 37 CFR 1.78(a)(5)(i) to the prior-filed application, unless previously submitted;
(2) the surcharge set forth in § 1.17(t); and
(3) a statement that the entire delay between the date the claim was due under 37 CFR 1.78(a)(5)(ii) and the date the claim was filed was unintentional. The Director may require additional information where there is a question whether the delay was unintentional.

Additionally, the instant nonprovisional application must be pending at the time of filing of the reference to the prior-filed provisional application as required by 37 CFR 1.78(a)(5)(ii). Further, the nonprovisional application claiming the benefit of the prior-filed provisional application must have been filed within twelve months of the filing date of the prior-filed provisional application.

All of the above requirements having been satisfied, the late claim for priority under 35 U.S.C. § 119(e) is accepted as being unintentionally delayed.

The granting of the petition to accept the delayed benefit claim to the prior-filed application under 37 CFR 1.78(a)(6) should not be construed as meaning that this

application is entitled to the benefit of the filing date of the prior-filed application. In order for this application to be entitled to the benefit of the prior-filed application, all other requirements under 35 U.S.C. §119(e) and 37 CFR 1.78(a)(4) and (a)(5) must be met. Similarly, the fact that the corrected Filing Receipt accompanying this decision on petition includes the prior-filed application should not be construed as meaning that applicant is entitled to the claim for benefit of priority to the prior-filed application noted thereon. Accordingly, the examiner will, in due course, consider this benefit claim and determine whether the application is entitled to the benefit of the earlier filing date.

A corrected Filing Receipt, which includes the priority claim to the prior-filed provisional application, accompanies this decision on petition.

The application is being forwarded to Technology Center Art Unit 1736 for consideration by the examiner of the claim under 35 U.S.C. §119(e) for the benefit of priority to the prior-filed provisional application.

Any inquiries concerning this decision may be directed to Senior Petitions Attorney Steven Brantley at (571) 272-3203. All other inquiries concerning either the examination procedures or status of the application should be directed to the Technology Center.

Charles Steven Brantley
Senior Petitions Attorney
Office of Petitions

ATTACHMENT: Corrected Filing Receipt

UNITED STATES PATENT AND TRADEMARK OFFICE

UNITED STATES DEPARTMENT OF COMMERCE
United States Patent and Trademark Office
Address: COMMISSIONER FOR PATENTS
P.O. Box 1450
Alexandria, Virginia 22313-1450
www.uspto.gov

APPLICATION NUMBER	FILING or 371(c) DATE	GRP ART UNIT	FIL FEE REC'D	ATTY.DOCKET.NO	TOT CLAIMS	IND CLAIMS
12/541,674	08/14/2009	1736	1090	032301.309DIV	14	1

CONFIRMATION NO. 3878

CORRECTED FILING RECEIPT

441
SMITH, GAMBRELL & RUSSELL
1130 CONNECTICUT AVENUE, N.W., SUITE 1130
WASHINGTON, DC 20036

OC000000045909724

Date Mailed: 02/09/2011

Receipt is acknowledged of this non-provisional patent application. The application will be taken up for examination in due course. Applicant will be notified as to the results of the examination. Any correspondence concerning the application must include the following identification information: the U.S. APPLICATION NUMBER, FILING DATE, NAME OF APPLICANT, and TITLE OF INVENTION. Fees transmitted by check or draft are subject to collection. Please verify the accuracy of the data presented on this receipt. **If an error is noted on this Filing Receipt, please submit a written request for a Filing Receipt Correction. Please provide a copy of this Filing Receipt with the changes noted thereon. If you received a "Notice to File Missing Parts" for this application, please submit any corrections to this Filing Receipt with your reply to the Notice. When the USPTO processes the reply to the Notice, the USPTO will generate another Filing Receipt incorporating the requested corrections**

Applicant(s)

Thomas Haas, Frankfurt, GERMANY;
Claudia Brasse, Hanau, GERMANY;
Guido Stochniol, Gelnhausen, GERMANY;
Jürgen Glenneberg, Offenbach, GERMANY;
Wolfgang Wöll, Maintal-Dornigheim, GERMANY;

Power of Attorney: The patent practitioners associated with Customer Number 25461

Domestic Priority data as claimed by applicant

This application is a DIV of 10/669,978 09/24/2003 PAT 7,722,847
which claims benefit of 60/414,327 09/30/2002

Foreign Applications (You may be eligible to benefit from the **Patent Prosecution Highway** program at the USPTO. Please see http://www.uspto.gov for more information.)

If Required, Foreign Filing License Granted: 08/25/2009

The country code and number of your priority application, to be used for filing abroad under the Paris Convention, is **US 12/541,674**

Projected Publication Date: Not Applicable

Non-Publication Request: No

Early Publication Request: No

Title

AQUEOUS HYDROGEN PEROXIDE SOLUTIONS AND METHOD OF MAKING SAMEÜ

Preliminary Class

423

PROTECTING YOUR INVENTION OUTSIDE THE UNITED STATES

Since the rights granted by a U.S. patent extend only throughout the territory of the United States and have no effect in a foreign country, an inventor who wishes patent protection in another country must apply for a patent in a specific country or in regional patent offices. Applicants may wish to consider the filing of an international application under the Patent Cooperation Treaty (PCT). An international (PCT) application generally has the same effect as a regular national patent application in each PCT-member country. The PCT process **simplifies** the filing of patent applications on the same invention in member countries, but **does not result** in a grant of "an international patent" and does not eliminate the need of applicants to file additional documents and fees in countries where patent protection is desired.

Almost every country has its own patent law, and a person desiring a patent in a particular country must make an application for patent in that country in accordance with its particular laws. Since the laws of many countries differ in various respects from the patent law of the United States, applicants are advised to seek guidance from specific foreign countries to ensure that patent rights are not lost prematurely.

Applicants also are advised that in the case of inventions made in the United States, the Director of the USPTO must issue a license before applicants can apply for a patent in a foreign country. The filing of a U.S. patent application serves as a request for a foreign filing license. The application's filing receipt contains further information and guidance as to the status of applicant's license for foreign filing.

Applicants may wish to consult the USPTO booklet, "General Information Concerning Patents" (specifically, the section entitled "Treaties and Foreign Patents") for more information on timeframes and deadlines for filing foreign patent applications. The guide is available either by contacting the USPTO Contact Center at 800-786-9199, or it can be viewed on the USPTO website at http://www.uspto.gov/web/offices/pac/doc/general/index.html.

For information on preventing theft of your intellectual property (patents, trademarks and copyrights), you may wish to consult the U.S. Government website, http://www.stopfakes.gov. Part of a Department of Commerce initiative, this website includes self-help "toolkits" giving innovators guidance on how to protect intellectual property in specific countries such as China, Korea and Mexico. For questions regarding patent enforcement issues, applicants may call the U.S. Government hotline at 1-866-999-HALT (1-866-999-4158).

LICENSE FOR FOREIGN FILING UNDER

Title 35, United States Code, Section 184

Title 37, Code of Federal Regulations, 5.11 & 5.15

GRANTED

The applicant has been granted a license under 35 U.S.C. 184, if the phrase "IF REQUIRED, FOREIGN FILING LICENSE GRANTED" followed by a date appears on this form. Such licenses are issued in all applications where the conditions for issuance of a license have been met, regardless of whether or not a license may be required as

set forth in 37 CFR 5.15. The scope and limitations of this license are set forth in 37 CFR 5.15(a) unless an earlier license has been issued under 37 CFR 5.15(b). The license is subject to revocation upon written notification. The date indicated is the effective date of the license, unless an earlier license of similar scope has been granted under 37 CFR 5.13 or 5.14.

This license is to be retained by the licensee and may be used at any time on or after the effective date thereof unless it is revoked. This license is automatically transferred to any related applications(s) filed under 37 CFR 1.53(d). This license is not retroactive.

The grant of a license does not in any way lessen the responsibility of a licensee for the security of the subject matter as imposed by any Government contract or the provisions of existing laws relating to espionage and the national security or the export of technical data. Licensees should apprise themselves of current regulations especially with respect to certain countries, of other agencies, particularly the Office of Defense Trade Controls, Department of State (with respect to Arms, Munitions and Implements of War (22 CFR 121-128)); the Bureau of Industry and Security, Department of Commerce (15 CFR parts 730-774); the Office of Foreign AssetsControl, Department of Treasury (31 CFR Parts 500+) and the Department of Energy.

NOT GRANTED

No license under 35 U.S.C. 184 has been granted at this time, if the phrase "IF REQUIRED, FOREIGN FILING LICENSE GRANTED" DOES NOT appear on this form. Applicant may still petition for a license under 37 CFR 5.12, if a license is desired before the expiration of 6 months from the filing date of the application. If 6 months has lapsed from the filing date of this application and the licensee has not received any indication of a secrecy order under 35 U.S.C. 181, the licensee may foreign file the application pursuant to 37 CFR 5.15(b).

UNITED STATES PATENT AND TRADEMARK OFFICE

Commissioner for Patents
United States Patent and Trademark Office
P.O. Box 1450
Alexandria, VA 22313-1450
www.uspto.gov

PILLSBURY WINTHROP SHAW PITTMAN, LLP
P.O. BOX 10500
MCLEAN VA 22102

MAILED

AUG 16 2010

OFFICE OF PETITIONS

In re Patent No. 7,691,776	:	
Issue Date: April 6, 2010	:	
Application No. 12/541,696	:	DECISION ON PETITION
Filed: August 14, 2009	:	
Attorney Docket No. 021123-0381880	:	

This is a decision on the petition under 37 CFR 1.182, filed July 16, 2010, requesting issuance of duplicate Letters Patent for the above-identified patent.

The petition is **GRANTED**.

The Office of Data Management is directed to issue duplicate Letters Patent.

As authorized, the $400 fee for the petition under 37 CFR 1.182 has been assessed to petitioner's deposit account.

Telephone inquiries concerning this decision may be directed to Terri Johnson at (571) 272-2991. Inquiries regarding the issuance of duplicate Letters Patent may be directed to Niomi Farmer in the Office of Data Management at (703) 756-1556.

A copy of this decision is being sent to Office of Data Management for issuance of duplicate Letters Patent.

Terri Johnson

Terri Johnson
Petitions Examiner
Office of Petitions

cc: Niomi Farmer, Randolph Square, 9th Floor, Room D30-B (Fax No. (571) 270-9753)

UNITED STATES PATENT AND TRADEMARK OFFICE

Commissioner for Patents
United States Patent and Trademark Office
P.O. Box 1450
Alexandria, VA 22313-1450
www.uspto.gov

MAILED

SEP 28 2010

OFFICE OF PETITIONS

FOLEY AND LARDNER LLP
SUITE 500
3000 K STREET NW
WASHINGTON, DC 20007

In re Application of Tucker et al. Application No. 12/541,701 Filed: August 14, 2009 Attorney Docket No. 069748-0157	: : : : :	DECISION ON PETITION TO WITHDRAW FROM RECORD

This is a decision on the Request to Withdraw as attorney or agent of record under 37 C.F.R. § 1.36(b), filed on July 30, 2010.

The request is **NOT APPROVED**.

The Office will only accept correspondence address changes to the most current address information provided for the assignee of the entire interest *who properly became of record under 37 CFR 3.71,* or, if no assignee of the entire interest has properly been made of record, the most current address information provided for the first named inventor. 37 CFR 3.71(c) states:

> *An assignee becomes of record either in a national patent application or a reexamination proceeding by filing a statement in compliance with § 3.73(b) that is signed by a party who is authorized to act on behalf of the assignee.*

As there is no Statement under 37 CFR 3.73(b) from the current assignee of record in the instant application, the request cannot be granted. All future communications from the Office will be directed to above-listed address until otherwise properly notified by the applicant or a proper change of correspondence address have been submitted.

There is an outstanding Office action mailed September 2, 2010, that requires a reply from the applicant.

Telephone inquires concerning this decision should be directed to the undersigned at (571) 272-6059. All other inquires concerning either the examination or status of the application should be directed to the Technology Center.

A. Kelley

Alicia Kelley
Petitions Examiner
Office of Petitions

UNITED STATES PATENT AND TRADEMARK OFFICE

Commissioner for Patents
United States Patent and Trademark Office
P.O. Box 1450
Alexandria, VA 22313-1450
www.uspto.gov

FOLEY AND LARDNER LLP
SUITE 500
3000 K STREET NW
WASHINGTON, DC 20007

MAILED
NOV 05 2010
OFFICE OF PETITIONS

In re Application	:	
Tucker et al.	:	DECISION ON PETITION
Application No. 12/541,701	:	TO WITHDRAW
Filed: August 14, 2009	:	FROM RECORD
Attorney Docket No. EME-014DV4	:	

This is a decision on the renewed Request to Withdraw as attorney or agent of record under 37 C.F.R. § 1.36(b), filed October 4, 2010.

The request is **DISMISSED**.

A review of the file record indicates that a Revocation and new Power of Attorney was filed on October 12, 2010, by the assignee. Accordingly, the request to withdraw under 37 C.F.R. § 1.36(b) is moot.

All future communications from the Office will be directed to the current correspondence address of record until otherwise notified by applicant.

Telephone inquires concerning this decision should be directed to the undersigned at (571) 272-6059. All other inquires concerning either the examination or status of the application should be directed to the Technology Center.

A. Kelley

Alicia Kelley
Petitions Examiner
Office of Petitions

UNITED STATES PATENT AND TRADEMARK OFFICE

Commissioner for Patents
United States Patent and Trademark Office
P.O. Box 1450
Alexandria, VA 22313-1450
www.uspto.gov

MAILED
DEC 02 2010
OFFICE OF PETITIONS

KLARQUIST SPARKMAN, LLP (OTT-NIH)
121 S.W. SALMON STREET
SUITE #1600
PORTLAND, OR 97204-2988

In re Application of	:	
Michael J. Birrer et al	:	DECISION REFUSING STATUS
Application No. 12/541,729	:	UNDER 37 CFR 1.47(a)
Filed: August 14, 2009	:	
Attorney Docket No. 4239-77699-03	:	

This is in response to the petition under 37 CFR 1.47(a), filed April 21, 2010.

The petition is **dismissed.**

Rule 47 applicant is given TWO MONTHS from the mailing date of this decision to reply, correcting the below-noted deficiencies. Any reply should be entitled "Request for Reconsideration of Petition Under 37 CFR 1.47(a)," and should only address the deficiencies noted below, except that the reply may include an oath or declaration executed by the non-signing inventor. **FAILURE TO RESPOND WILL RESULT IN ABANDONMENT OF THE APPLICATION.** Any extensions of time will be governed by 37 CFR 1.136(a).

A grantable petition under 37 CFR 1.47(a) requires: (1) proof that the non-signing inventor cannot be reached or refuses to sign the oath or declaration after having been presented with the application papers (specification, claims and drawings); (2) an acceptable oath or declaration in compliance with 35 U.S.C. §§ 115 and 116; (3) the petition fee; and (4) a statement of the last known address of the non-signing inventor. Applicant lacks item (1) set forth above.

As to item (1), there is no evidence that the non-signing inventor was presented with the application papers. The evidence of record only indicates that the non-signing inventor was presented with the declaration document and complete specification. As it is unclear as to what the e-mail attachments consisted of, it is also unclear if the nonsigning inventor Tomas A. Bonome received the application papers (specification, claims, drawings, oath, etc). Therefore, at the very least, petitioner should mail correspondence to the nonsigning inventor's last known address, return receipt and/or forwarding address requested. If a forwarding address is provided, petitioner should then mail a complete copy of the application papers to Mr. Bonome's address, return receipt requested, along with a cover letter of instructions which includes a deadline or a statement that no response will constitute a refusal. This sort of ultimatum lends support to a finding of refusal by conduct. If the papers are returned then applicant will have established that the inventor cannot be reached after diligent effort or has refused to join in the application. **The**

statements of facts must be signed, where at all possible, by a person having firsthand knowledge of the facts recited therein and should be accompanied by documentary evidence in support of the statement of facts. It is important that the forthcoming communication contain statements of fact as opposed to conclusions.

Where there is an express or oral refusal, that fact, along with the time and place of the refusal, must be stated in an affidavit or declaration by the party to whom the refusal was made. Where there is a written refusal, a copy of the document(s) evidencing that refusal must be made part of the affidavit or declaration.

When it is concluded by the rule 47 applicant that an omitted inventor's conduct constitutes a refusal, all facts upon which that conclusion is based should be stated in an affidavit or declaration. If there is documentary evidence to support facts alleged in the affidavit or declaration, such evidence must be submitted.

Whenever an omitted inventor gives a reason for refusing to sign the application oath or declaration, that reason should be stated in the affidavit or declaration.

Further correspondence with respect to this matter should be addressed as follows:

By mail: Mail Stop PETITIONS
Commissioner for Patents
Post Office Box 1450
Alexandria, VA 22313-1450

By hand: Customer Service Window
Mail Stop Petitions
Randolph Building
401 Dulany Street
Alexandria, VA 22314

By fax: (571) 273-8300
ATTN: Office of Petitions

Telephone inquiries should be directed to Irvin Dingle at (571) 272-3210.

David Bucci
Petition Examiner
Office of Petitions

UNITED STATES PATENT AND TRADEMARK OFFICE

Commissioner for Patents
United States Patent and Trademark Office
P.O. Box 1450
Alexandria, VA 22313-1450
www.uspto.gov

KLARQUIST SPARKMAN, LLP (OTT-NIH)
121 S.W. SALMON STREET
SUITE #1600
PORTLAND, OR 97204-2988

MAILED
MAR 28 2011
OFFICE OF PETITIONS

In re Application of	:	
Michael J. Birrer et al	:	DECISION GRANTING STATUS
Application No. 12/541,729	:	UNDER 37 CFR 1.47(a)
Filed: August 14, 2009	:	
Attorney Docket No. 4239-77699-03	:	

This is a decision on the petition filed, February 2, 2011, requesting reconsideration of a decision mailed December 2, 2010, which refused to accord 37 CFR 1.47(a) status to the above-identified application.

The petition is **GRANTED.**

Petitioner has shown that the non-signing inventor, Tomas A. Bonome, has refused to join in the filing of the above-identified application.

The application and papers have been reviewed and found in compliance with 37 CFR 1.47(a). This application is hereby accorded Rule 1.47(a) status.

As provided in 37 CFR 1.47(c), this Office will forward notice of this application's filing to the non-signing inventor at the address given in the petition. Notice of the filing of this application will also be published in the Official Gazette.

This matter is being referred to the Office of Patent Application Processing.

Telephone inquiries regarding this decision should be directed to Irvin Dingle at (571) 272-3210.

David Bucci
Petitions Examiner
Office of Petitions

UNITED STATES PATENT AND TRADEMARK OFFICE

Commissioner for Patents
United States Patent and Trademark Office
P.O. Box 1450
Alexandria, VA 22313-1450
www.uspto.gov

MAILED

MAR 28 2011

OFFICE OF PETITIONS

Tomas A. Bonome
305 10th Street NE
Washington, DC 20002

In re Application of
Michael J. Birrer; Tomas A. Bonome; Anil Sood; Chunhua Lu
Application No. 12/541,729
Filed: August 14, 2009
For: PRO-ANGIOGENIC GENES IN OVARIAN TUMOR ENDOTHELIAL CELL ISOLATES

Dear Mr. Bonome:

You are named as a joint inventor in the above identified United States patent application, filed under the provisions of 35 U.S.C. 116 (United States Code), and 37 CFR 1.47(a), Rules of Practice in Patent Cases. Should a patent be granted on the application you will be designated therein as a joint inventor.

As a named inventor you are entitled to inspect any paper in the file wrapper of the application, order copies of all or any part thereof (at a prepaid cost per 37 CFR 1.19) or make your position of record in the application. Alternatively, you may arrange to do any of the preceding through a registered patent attorney or agent presenting written authorization from you. If you care to join in the application, counsel of record (see below) would presumably assist you. Joining in the application would entail the filing of an appropriate oath or declaration by you pursuant to 37 CFR 1.63.

Telephone inquiries regarding this communication should be directed to the Irvin Dingle at (571) 272-3210. Requests for information regarding your application should be directed to the File Information Unit at (703) 308-2733. Information regarding how to pay for and order a copy of the application, or a specific paper in the application, should be directed to Certification Division at (571) 272-3150 or 1 (800) 972-6382 (outside the Washington D.C. area).

David Buczi
Petitions Examiner
Office of Petitions

cc: Klarquist Sparkman, LLP (OTT-NIH)
121 S.W. Salmon Street
Suite #1600
Portland, OR 97204-2988

UNITED STATES PATENT AND TRADEMARK OFFICE

Commissioner for Patents
United States Patent and Trademark Office
P.O. Box 1450
Alexandria, VA 22313-1450
www.uspto.gov

BLAKELY SOKOLOFF TAYLOR & ZAFMAN LLP
1279 OAKMEAD PARKWAY
SUNNYVALE CA 94085-4040

MAILED

NOV 22 2010

OFFICE OF PETITIONS

In re Application of	:	
Alexander O. Goushcha	:	
Application No. 12/541,747	:	DECISION ON PETITION
Filed: August 14, 2009	:	TO WITHDRAW
Attorney Docket No. **2712P014C**	:	FROM RECORD
	:	

This is a decision on the Request to Withdraw as attorney or agent of record under 37 CFR § 1.36(b), filed November 5, 2010.

The request is **NOT APPROVED**.

The request still cannot be approved at this present time because the requested change in the correspondence address is improper.

As stated in the previous decision the Office will only accept correspondence address changes to the most current address information provided for the assignee of the entire interest *who properly became of record under 37 CFR 3.71,* or, if no assignee of the entire interest has properly been made of record, the most current address information provided for the first named inventor. 37 CFR 3.71(c) states:

> *An assignee becomes of record either in a national patent application or a reexamination proceeding by filing a statement in compliance with § 3.73(b) that is signed by a party who is authorized to act on behalf of the assignee.*

The assignee must establish its ownership of the patent to the satisfaction of the Director. In this regard, the statement under 37 CFR 3.73(b) must have either: (i) documentary evidence of a chain of title from the original owner to the assignee (*e.g.*, copy of an executed assignment), and a statement affirming that the documentary evidence of the chain of title from the original owner to the assignee was or concurrently is being submitted for recordation pursuant to § 3.11; or (ii) a statement specifying where documentary evidence of a chain of title from the original owner to the assignee is recorded in the assignment records of the Office (*e.g.*, reel and frame number).

Therefore, as there is still currently no Statement under 37 CFR 3.73(b) with the current assignee information of record in the instant application, the Office cannot change the correspondence address to the address on the Request to Withdraw at this present time.

All future communications from the Office will continue to be directed to the above-listed address until otherwise notified by applicant.

Telephone inquires concerning this decision should be directed to JoAnne Burke at 571-272-4584.

/JoAnne Burke/
JoAnne Burke
Petitions Examiner
Office of Petitions

UNITED STATES PATENT AND TRADEMARK OFFICE

Commissioner for Patents
United States Patent and Trademark Office
P.O. Box 1450
Alexandria, VA 22313-1450
www.uspto.gov

PATENT DOCKET CLERK
COWAN LIEBOWITZ & LATMAN, P.C.
1133 AVENUE OF THE AMERICAS
NEW YORK, NY 10036

MAILED
SEP 22 2011
OFFICE OF PETITIONS

In re Application of	:	
Sayre Swarztrauber et al	:	
Application No. 12/541,852	:	DECISION GRANTING PETITION
Filed: August 14, 2009	:	UNDER 37 CFR 1.313(c)(2)
Attorney Docket No. 29325-013	:	

This is a decision on the petition under 37 CFR 1.313(c)(2), filed, September 21, 2011 to withdraw the above-identified application from issue after payment of the issue fee.

The petition is **GRANTED**.

The above-identified application is withdrawn from issue for consideration of a submission under 37 CFR 1.114 (request for continued examination). *See* 37 CFR 1.313(c)(2).

Petitioner is advised that the issue fee paid on August 29, 2011 in the above-identified application cannot be refunded. If, however, the above-identified application is again allowed, petitioner may request that it be applied towards the issue fee required by the new Notice of Allowance.[1]

Telephone inquiries should be directed to Irvin Dingle at (571) 272-3210.

This matter is being referred to Technology Center AU 2857 for processing of the request for continued examination under 37 CFR 1.114 and for consideration of the concurrently filed Information Disclosure Statement.

/Irvin Dingle/
Irvin Dingle
Petitions Examiner
Office of Petitions

[1] The request to apply the issue fee to the new Notice may be satisfied by completing and returning the new Issue Fee Transmittal Form PTOL-85(b), which includes the following language thereon: Commissioner for Patents is requested to apply the Issue Fee and Publication Fee (if any) or re-apply any previously paid issue fee to the application identified above. Petitioner is advised that, whether a fee is indicated as being due or not, the Issue Fee Transmittal Form **must** be completed and timely submitted to avoid abandonment. Note the language in bold text on the first page of the Notice of Allowance and Fee(s) Due (PTOL-85).

UNITED STATES PATENT AND TRADEMARK OFFICE

Commissioner for Patents
United States Patent and Trademark Office
P.O. Box 1450
Alexandria, VA 22313-1450
www.uspto.gov

TREYZ LAW GROUP
870 MARKET STREET, SUITE 984
SAN FRANCISCO, CA 94102

MAILED

APR 28 2011

OFFICE OF PETITIONS

In re Application of :
Robert W. Schlub et al :
Application No. 12/541,874 :
Filed: August 14, 2009 :
Attorney Docket No. HANDHELD ELECTRONIC DEVICES WITH ISOLATED ANTENNAS

ON PETITION

This is a decision on the petition, filed April 26, 2011 under 37 CFR 1.313(c)(2) to withdraw the above-identified application from issue after payment of the issue fee.

The petition is **GRANTED**.

The above-identified application is withdrawn from issue for consideration of a submission under 37 CFR 1.114 (request for continued examination). See 37 CFR 1.313(c)(2).

Petitioner is advised that the issue fee paid on February 11, 2011 in the above-identified application cannot be refunded. If, however, the above-identified application is again allowed, petitioner may request that it be applied towards the issue fee required by the new Notice of Allowance.[1]

Telephone inquiries should be directed to Irvin Dingle at (571) 272-3210.

This matter is being referred to Technology Center AU 2821 for processing of the request for continued examination under 37 CFR 1.114 and for consideration of the concurrently filed Information Disclosure Statement.

/Irvin Dingle/
Irvin Dingle
Petitions Examiner
Office of Petitions

---

[1] The request to apply the issue fee to the new Notice may be satisfied by completing and returning the new Issue Fee Transmittal Form PTOL-85(b), which includes the following language thereon: Commissioner for Patents is requested to apply the Issue Fee and Publication Fee (if any) or re-apply any previously paid issue fee to the application identified above. Petitioner is advised that, whether a fee is indicated as being due or not, the Issue Fee Transmittal Form **must** be completed and timely submitted to avoid abandonment. Note the language in bold text on the first page of the Notice of Allowance and Fee(s) Due (PTOL-85).

UNITED STATES PATENT AND TRADEMARK OFFICE

Commissioner for Patents
United States Patent and Trademark Office
P.O. Box 1450
Alexandria, VA 22313-1450
www.uspto.gov

FITZPATRICK CELLA HARPER & SCINTO
1290 AVENUE OF THE AMERICAS
NEW YORK, NY 10104-3800

MAILED

OCT 14 2010

OFFICE OF PETITIONS

In re Application of :
Hirokazu Kawamoto :
Application No. 12/541,885 :
Filed: August 14, 2009 :
Attorney Docket No. 03500.014312.2

ON PETITION

This is a decision on the petition, filed October 12, 2010 under 37 CFR 1.313(c)(2) to withdraw the above-identified application from issue after payment of the issue fee.

The petition is **GRANTED**.

The above-identified application is withdrawn from issue for consideration of a submission under 37 CFR 1.114 (request for continued examination). See 37 CFR 1.313(c)(2).

Petitioner is advised that the issue fee paid on September 8, 2010 in the above-identified application cannot be refunded. If, however, the above-identified application is again allowed, petitioner may request that it be applied towards the issue fee required by the new Notice of Allowance.[1]

Telephone inquiries should be directed to Irvin Dingle at (571) 272-3210.

This matter is being referred to Technology Center AU 2625 for processing of the request for continued examination under 37 CFR 1.114 and for consideration of the concurrently filed Information Disclosure Statement.

/Irvin Dingle/
Irvin Dingle
Petitions Examiner
Office of Petitions

[1] The request to apply the issue fee to the new Notice may be satisfied by completing and returning the new Issue Fee Transmittal Form PTOL-85(b), which includes the following language thereon: Commissioner for Patents is requested to apply the Issue Fee and Publication Fee (if any) or re-apply any previously paid issue fee to the application identified above. Petitioner is advised that, whether a fee is indicated as being due or not, the Issue Fee Transmittal Form **must** be completed and timely submitted to avoid abandonment. Note the language in bold text on the first page of the Notice of Allowance and Fee(s) Due (PTOL-85).

UNITED STATES PATENT AND TRADEMARK OFFICE

Commissioner for Patents
United States Patent and Trademark Office
P.O. Box 1450
Alexandria, VA 22313-1450
www.uspto.gov

MAILED
MAY 23 2011
OFFICE OF PETITIONS

ANTONIO R. DURANDO
6902 N. TABLE MOUNTAIN ROAD
TUCSON AZ 85718-1331

In re Application of	:	
Yung-Chieh Hsieh	:	
Application No. 12/541,894	:	DECISION ON PETITION
Filed: August 14, 2009	:	
Attorney Docket No. 7.049	:	

This is a decision on the petition, filed May 11, 2011, under the provisions of 37 CFR 1.137(a), which is being treated as a petition under 37 CFR 1.181(a) to Withdraw Holding of Abandonment (no fee).

The petition under 37 CFR 1.181(a) is **GRANTED**.

The application was held abandoned for failure to timely reply to the Restriction Requirement Office action mailed October 12, 2010.

The petition states that "On 10/12/2011[sic] 10/12/2010, an Action with a Request for Restriction was issued by the Office and received by the applicant via e-mail. On the same day, 12/12/21011 [sic] 12/12/2010, a Response was filed electronically by the applicant via EFS-Web and received by the Office. A review of PAIR will confirm these dates. .."

A review of Office records show that a response to the Office action mailed October 12, 2010, was received on October 12, 2010.

In view of the above, the holding of abandonment is hereby withdrawn and the application restored to pending status.

As to the Request for Refund filed May 11, 2011, the petition fee of $270.00 is being refunded to petitioner's credit card account as it is the method in which the fee was paid.

Telephone inquiries concerning this decision should be directed to the undersigned at (571) 272-3208.

This matter is being referred to Technology Center AU 2874 for appropriate action by the Examiner in the normal course of business on the reply received October 12, 2010.

/KOC/
Karen Creasy
Petitions Examiner
Office of Petitions

UNITED STATES PATENT AND TRADEMARK OFFICE

Commissioner for Patents
United States Patent and Trademark Office
P.O. Box 1450
Alexandria, VA 22313-1450
www.uspto.gov

Decision Date March 23, 2012
In re Application of Evan Kaye
Application No. 12541900
Filed: 14-Aug-2009

DECISION ON PETITION
UNDER CFR 1.137(b)

Attorney Docket No.

This is an electronic decision on the petition under 37 CFR 1.137(b), March 23, 2012 , to revive the above-identified application.

The petition is **GRANTED**.

The above-identified application became abandoned for failure to reply in a timely manner to the outstanding Office communication. The date of abandonment is the day after the last day of the period set for reply in the Office action plus any applicable extensions of time properly requested.

The electronic petition satisfies the conditions for revival pursuant to the provisions of 37 CFR 1.137(b) in that (1) the reply in the form of a response; (2) the petition fee as set forth in 37 CFR 1.17 (m); and (3) the required statement of unintentional delay have been received. Accordingly, the response is accepted as having been unintentionally delayed.

The statement of unintentional delay is being treated as having been made as the result of a reasonable inquiry into the facts and circumstances of such delay and by a person having firsthand or direct knowledge of the facts and circumstances of the delay at issue. See 37 CFR 10.18(b) and Changes to Patent Practice and Procedure; Final Rule Notice, 62 Fed. Reg.53131, 53178 (October 10, 1997), 1203 Off. Gaz. Pat. Office 63, 103 (October 21, 1997). In the event that such an inquiry has not been made, petitioner must make such an inquiry. If such inquiry results in the discovery that it is not correct that the entire delay in filing the required reply from the due date for the reply until the filing of a grantable petition pursuant to 37 CFR 1.137(b) was unintentional, petitioner must notify the Office.

Telephone inquiries concerning this decision should be directed to the Patent Electronic Business Center (EBC) at 866-217-9197.

This application file is being directed to the Technology Center.

Office of Petitions

Doc Code: PET.AUTO Document Description: Petition automatically granted by EFS-Web	PTO/SB/64 U.S. Patent and Trademark Office Department of Commerce

Electronic Petition Request	**PETITION FOR REVIVAL OF AN APPLICATION FOR PATENT ABANDONED UNINTENTIONALLY UNDER 37 CFR 1.137(b)**
Application Number	12541900
Filing Date	14-Aug-2009
First Named Inventor	Evan Kaye
Attorney Docket Number	
Title	Digital Rights Management for Music Video Soundtracks

The above-identified application became abandoned for failure to file a timely and proper reply to a notice or action by the United States Patent and Trademark Office. The date of abandonment is the day after the expiration date of the period set for reply in the office notice or action plus any extensions of time actually obtained.

APPLICANT HEREBY PETITIONS FOR REVIVAL OF THIS APPLICATION

NOTE: A grantable petition requires the following items:
(1) Petition fee;
(2) Reply and/or issue fee;
(3) Terminal disclaimer with disclaimer fee - required for all utility and plant applications filed before June 8, 1995; and for all design applications; and
(4) Statement that the entire delay was unintentional

Petition Fee

- ○ Applicant claims SMALL ENTITY status. See 37 CFR 1.27.
- ○ Applicant is no longer claiming SMALL ENTITY status. See 37 CFR 1.27(g)(2).
- ◉ Applicant(s) status remains as SMALL ENTITY.
- ○ Applicant(s) status remains as other than SMALL ENTITY.

2. Reply and/or fee

- ○ I certify, in accordance with 37 CFR 1.4(d)(4) that the amendment and response have already been filed in the above-identified application on
- ◉ Amendment and response are attached

RCE request,submission, and fee.

- ○ I certify, in accordance with 37 CFR 1.4(d)(4) that the RCE Request, Submission, and Fee have already been filed in the above-identified application on
- ○ RCE Request, Submission, and Fee are attached

Notice of Appeal

○ I certify, in accordance with 37 CFR 1.4(d)(4) that the Notice of Appeal and Fee have already been filed in the above-identified application on

○ Notice of Appeal and Fee are attached

3. Terminal Disclaimer is not required, since the Electronic Petition format is not support for Design applications and applications filed before June 8, 1995. Please file using regular petition format for review by the Office of Petitions.

☒ STATEMENT: The entire delay in filing the required reply from the due date for the required reply until the filing of a grantable petition under 37 CFR 1.137(b) was unintentional.

THIS PORTION MUST BE COMPLETED BY THE SIGNATORY OR SIGNATORIES

I certify, in accordance with 37 CFR 1.4(d)(4) that I am:

○ An attorney or agent registered to practice before the Patent and Trademark Office who has been given power of attorney in this application.

◉ An attorney or agent registered to practice before the Patent and Trademark Office, acting in a representative capacity.

○ A sole inventor

○ A joint inventor; I certify that I am authorized to sign this submission on behalf of all of the inventors

○ A joint inventor; all of whom are signing this e-petition

○ The assignee of record of the entire interest that has properly made itself of record pursuant to 37 CFR 3.71

Signature	/david leason/
Name	David Leason
Registration Number	36195

UNITED STATES PATENT AND TRADEMARK OFFICE

Commissioner for Patents
United States Patent and Trademark Office
P.O. Box 1450
Alexandria, VA 22313-1450
www.uspto.gov

10 AUG 2010

Merchant & Gould PC
P.O. Box 2903
Minneapolis MN 55402-0903

In re Application of:
HONG et al.
U.S. Application No.: 12/541,991
Filing Date: August 17, 2009
Attorney's Docket No.: 70194.0005USWO
For: BEAD FOR STITCHING, VACUUM CAP FOR SUCTION INTERNAL ORGAN AND APPARATUS FOR STITCHING INTERNAL ORGAN USING THE SAME

DECISION

This decision is issued in response to applicant's Petition under 37 CFR 1.78(a)(3) dated July 16, 2010 to accept an unintentionally delayed claim under 35 U.S.C. § 120 and 365(c) for the benefit of priority to the prior-filed international application set forth set forth in the amendment filed concurrently with the instant petition.

The petition is **DISMISSED**.

The present nonprovisional application was filed after November 29, 2000, and the claim herein for the benefit of priority to the prior-filed nonprovisional applications is submitted after expiration of the period specified in 37 CFR 1.78(a)(2)(ii). Therefore, this is a proper petition under 37 CFR 1.78(a)(3).

A petition for acceptance of a claim for late priority under 37 CFR 1.78(a)(3) is only applicable to those applications filed on or after November 29, 2000. Further, the petition is appropriate only after the expiration of the period specified in 37 CFR 1.78(a)(2)(ii). In addition, the petition under 37 CFR 1.78(a)(3) must be accompanied by:

(1) the reference required by 35 U.S.C. § 120 and 37 CFR 1.78(a)(2)(i) of the prior-filed application(s), unless previously submitted;
(2) the surcharge set forth in § 1.17(t); and
(3) a statement that the entire delay between the date the claim was due under 37 CFR 1.78(a)(2)(ii) and the date the claim was filed was unintentional. The Commissioner may require additional information where there is a question whether the delay was unintentional.

The petition does not comply with item (1) above.

The reference to add the prior-filed application on page one following the first sentence of the specification is not acceptable as drafted since it improperly incorporates by reference the prior-filed applications. An incorporation by reference statement added after an application's filing date is not effective because no new matter can be added to an application after its filing date (see 35 U.S.C. § 132(a)). If an incorporation by reference statement is included in an amendment to the specification to add a benefit claim under 35 U.S.C. § 120 after the filing date of the application, the amendment would not be proper. When a benefit claim under 35 U.S.C. § 120 is submitted after the filing of an application, the reference to the prior application cannot include an incorporation by reference statement of the prior application. See Dart Industries v. Banner, 636 F.2d 684, 207 USPQ 273 (C.A.D.C. 1980). Note MPEP §§ 201.06(c) and 608.04(b).

With regard to Item (3), applicant's statement that "the delay between the date the claim was due under paragraph (a)(5)(ii) of this section and the date the claim was filed was unintentional" is construed as meaning that "the entire delay between the date the claim was due under 37 CFR 1.78(a)(2)(ii) and the date the claim was filed was unintentional." If this is incorrect, petitioner must immediately notify the Office of PCT Legal Administration. As construed, petitioner's statement satisfied item (3) above.

Before the petition under 37 CFR § 1.78(a)(3) can be granted, a renewed petition and a proper amendment (complying with the provisions of 37 CFR 1.121) to correct the above matters are required.

Any questions concerning this matter may be directed to Anthony Smith at (571) 272-3298.

Any further correspondence with respect to this matter may be filed electronically via EFS-Web selecting the document description "Petition for review and processing by the PCT Legal Office" or by mail addressed to Mail Stop PCT, Commissioner for Patents, Office of PCT Legal Administration, P.O. Box 1450, Alexandria, Virginia 22313-1450, with the contents of the letter marked to the attention of the Office of PCT Legal Administration.

Bryan Lin

Bryan Lin
PCT Legal Examiner
Office of PCT Legal Administration

1 5 SEP 2010

UNITED STATES PATENT AND TRADEMARK OFFICE

Commissioner for Patents
United States Patent and Trademark Office
P.O. Box 1450
Alexandria, VA 22313-1450
www.uspto.gov

Merchant & Gould PC
P.O. Box 2903
Minneapolis MN 55402-0903

In re Application of:
HONG et al.
U.S. Application No.: 12/541,991
Filing Date: August 17, 2009
Attorney's Docket No.: 70194.0005USWO
For: BEAD FOR STITCHING, VACUUM CAP FOR SUCTION INTERNAL ORGAN AND APPARATUS FOR STITCHING INTERNAL ORGAN USING THE SAME

DECISION

This decision is issued in response to applicant's Renewed Petition under 37 CFR 1.78(a)(3) dated August 26, 2010 to accept an unintentionally delayed claim under 35 U.S.C. § 120 and 365(c) for the benefit of priority to the prior-filed international application set forth in the amendment filed concurrently with the instant petition.

The present nonprovisional application was filed after November 29, 2000, and the claim herein for the benefit of priority to the prior-filed international application is submitted after expiration of the period specified in 37 CFR 1.78(a)(2)(ii). Therefore, this is a proper petition under 37 CFR 1.78(a)(3).

A petition for acceptance of a claim for late priority under 37 CFR 1.78(a)(3) is only applicable to those application filed on or after November 29, 2000. Further, the petition is appropriate only after the expiration of the period specified in 37 CFR 1.78(a)(2)(ii). In addition, the petition under 37 CFR 1.78(a)(3) must be accompanied by:

(1) the reference required by 35 U.S.C. § 120 and 37 CFR 1.78(a)(2)(i) of the prior-filed application, unless previously submitted;
(2) the surcharge set forth in § 1.17(t); and
(3) a statement that the entire delay between the date the claim was due under 37 CFR 1.78(a)(2)(ii) and the date the claim was filed was unintentional. The Director may require additional information where there is a question whether the delay was unintentional.

The petition complies with the requirements for a grantable petition under 37 CFR 1.78(a)(3) in that (1) a reference to the prior-filed international application has been included in an amendment filed with present petition, as provided by 37 CFR 1.78(a)(2)(iii); (2) the surcharge fee required by 37 CFR 1.17(t) has been submitted; and (3) applicant's statement that "the delay between the date the claim was due under paragraph (a)(5)(ii) of this section and the date the claim was filed was unintentional" is construed as meaning that "the entire delay between the date the claim was due under 37 CFR 1.78(a)(2)(ii) and the date the claim was filed was unintentional." If this is incorrect, petitioner must immediately notify the Office of PCT Legal Administration. As construed, petitioner's statement satisfied item (3) above. Accordingly, having found that the instant petition for acceptance of an unintentionally delayed claim for the benefit of priority under 35 U.S.C. § 120 to the prior-filed international application satisfies the conditions of 37 CFR 1.78(a)(3), the petition is granted.

The granting of the petition to accept the delayed benefit claim to the prior-filed applications under 37 CFR 1.78(a)(3) should not be construed as meaning that this application is entitled to the benefit of the prior-filed application. In order for this application to be entitled to the benefit of the prior-filed application, all other requirements under 35 U.S.C. § 120 and 37 CFR 1.78(a)(1) and (a)(2) must be met. Similarly, the fact that the corrected Filing Receipt accompanying this decision on petition includes the prior-filed application should not be construed as meaning that applicant is entitled to the claim for benefit of priority to the prior-filed application noted thereon. Accordingly, the examiner will, in due course, consider this benefit claim and determine whether this application is entitled to the benefit of the earlier filing date.

A corrected Filing Receipt, which includes the benefit claim to the prior-filed international application, accompanies this decision on petition.

Any inquiries concerning this decision may be directed to Anthony Smith, Attorney Advisor, at (571) 272-3298. All other inquiries concerning either the examination procedures or status of the application should be directed to the Technology Center.

This matter is being referred to Technology Center Art Unit 3773 for appropriate action on the amendment filed August 26, 2010, including consideration by the examiner of applicant's entitlement to claim benefit of priority under 35 U.S.C. §120 to the prior-filed nonprovisional applications.

Bryan Lin

Bryan Lin
PCT Legal Examiner
Office of PCT Legal Administration

UNITED STATES PATENT AND TRADEMARK OFFICE

Commissioner for Patents
United States Patent and Trademark Office
P.O. Box 1450
Alexandria, VA 22313-1450
www.uspto.gov

MILLER THOMPSON, LLP
SCOTIA PLAZA
40 KING STREET WEST, SUITE 5800
TORONTO ON M5H 3S1 CA CANADA

MAILED

OCT 06 2011

OFFICE OF PETITIONS

In re Application of
Lawrence Wayne Vereschagin
Application No. 12/542,021
Filed: August 17, 2009
Attorney Docket No. **073252.0006**

ON PETITION

This is a decision on the petition filed September 24, 2011, under 37 CFR 1.137(a)[1], to revive the above-identified application.

The petition is **GRANTED**.

This application became abandoned November 18, 2010 for failure to timely respond to the non-Final Office Action mailed August 17, 2010. Accordingly, the Notice of Abandonment was mailed March 1, 2011.

Petitioner argues that the address used for mailing the Notice on December 18, 2007 was incorrect in that "... the address on both the Notice of Abandonment dated March 1, 2011 and the Office Action dated August 17, 2010 is incorrectly identified....." and therefore the delay in filing a response to the non-Final Office Action was unavoidable.

Decisions on reviving abandoned applications on the basis of "unavoidable" delay have adopted the reasonably prudent person standard in determining if the delay was unavoidable:

> The word 'unavoidable' . . . is applicable to ordinary human affairs, and requires no more or greater care or diligence than is generally used and

---

[1]A grantable petition under 37 CFR 1.137(a) must be accompanied by:

(1) the required reply, unless previously filed; In a nonprovisional application abandoned for failure to prosecute, the required reply may be met by the filing of a continuing application. In a nonprovisional utility or plant application filed on or after June 8, 1995, and abandoned for failure to prosecute, the required reply may also be met by the filing of a request for continued examination in compliance with § 1.114. In an application or patent, abandoned or lapsed for failure to pay the issue fee or any portion thereof, the required reply must be the payment of the issue fee or any outstanding balance thereof.
(2) the petition fee as set forth in 37 CFR 1.17(l);
(3) a showing to the satisfaction of the Director that the entire delay in filing the required reply from the due date for the reply until the filing of a grantable petition pursuant to 37 CFR 1.137(a) was unavoidable; and
(4) any terminal disclaimer (and fee as set forth in 37 CFR 1.20(d)) required pursuant to 37 CFR 1.137(c).

> observed by prudent and careful men in relation to their most important business. It permits them in the exercise of this care to rely upon the ordinary and trustworthy agencies of mail and telegraph, worthy and reliable employees, and such other means and instrumentalities as are usually employed in such important business. If unexpectedly, or through the unforeseen fault or imperfection of these agencies and instrumentalities, there occurs a failure, it may properly be said to be unavoidable, all other conditions of promptness in its rectification being present.[2]

Specifically, an application is "unavoidably" abandoned only where petitioner, or counsel for petitioner, takes all action necessary for a proper response to the outstanding Office action, but through the intervention of unforeseen circumstances, such as failure or mail, telegraph, telefacsimile, or the negligence of otherwise reliable employees, the response is not timely received in the Office.[3]

A review of the file reveals that the petitioner is correct and it is noted that an error on the part of the USPTO caused the office action mailed to not be received by the petitioner. Thus, petitioner's delay in responding to the non-Final Office Action was unavoidable under the standard set out at 37 CFR 1.137(a).

All other requirements of 37 CFR 1.137(a)having now been met, this matter is being referred to Technology Center 3726 for appropriate action on the amendment filed September 24, 2011.

Telephone inquiries concerning this matter may be directed to the undersigned Petitions Attorney at (571) 272-3212.

Patricia Faison-Ball

Patricia Faison-Ball
Senior Petitions Attorney
Office of Petitions

---

[2] In re Mattullath, 38 App. D.C. 497, 514-15 (1912)(quoting Ex parte Pratt, 1887 Dec. Comm'r Pat. 31, 32-33 (1887)); see also Winkler v. Ladd, 221 F. Supp. 550, 552, 138 USPQ 666, 167-68 (D.D.C. 1963), aff'd, 143 USPQ 172 (D.C. Cir. 1963); Ex parte Henrich, 1913 Dec. Comm'r Pat. 139, 141 (1913). In addition, decisions on revival are made on a "case-by-case basis, taking all the facts and circumstances into account." Smith v. Mossinghoff, 671 F.2d 533, 538, 213 USPQ 977, 982 (D.C. Cir. 1982). Finally, a petition cannot be granted where a petitioner has failed to meet his or her burden of establishing that the delay was "unavoidable." Haines v. Quigg, 673 F. Supp. 314, 316-17, 5 USPQ2d 1130, 1131-32 (N.D. Ind. 1987).

[3] Ex parte Pratt, 1887 Dec. Comm'r Pat. 31 (Comm'r Pat. 1887).

UNITED STATES PATENT AND TRADEMARK OFFICE

Commissioner for Patents
United States Patent and Trademark Office
P.O. Box 1450
Alexandria, VA 22313-1450
www.uspto.gov

FASTH LAW OFFICES (ROLF FASTH)
26 PINECREST PLAZA, SUITE 2
SOUTHERN PINES NC 28387-4301

MAILED
MAR 19 2012
OFFICE OF PETITIONS

In re Application of	:	
Anders L. Hoglund	:	
Application No. 12/542,041	:	DECISION ON PETITION
Filed: August 17, 2009	:	TO WITHDRAW
Attorney Docket No.: 392.892CIP	:	FROM RECORD
	:	

This is a decision on the Request to Withdraw as attorney or agent of record under 37 C.F.R. § 1.36(b), filed March 2, 2012.

The request is **NOT APPROVED**.

A grantable request to withdraw as attorney/agent of record must be signed by every attorney/agent seeking to withdraw or contain a clear indication that one attorney is signing on behalf of another/others.

The request is filed by Rolf Fasth.

The Office no longer accepts an address change to the new practitioner identified in the request, absent the filing of a power of attorney to the new representative. The Office will, however, change the correspondence address of record to the most current address provided for (1) the intervening assignee of the entire interest or (2) the first named inventor.

The request to withdraw from record cannot be approved at this time, since a current correspondence address was not provided.

All future communications from the Office will continue to be directed to the above-listed address until otherwise notified by applicant.

Telephone inquiries concerning this decision should be directed to undersigned at 571-272-3210.

All other inquiries concerning the examination or status of this application should be directed to the Technology Center.

Irvin Dingle
Petitions Examiner
Office of Petitions

UNITED STATES PATENT AND TRADEMARK OFFICE

Commissioner for Patents
United States Patent and Trademark Office
P.O. Box 1450
Alexandria, VA 22313-1450
www.uspto.gov

PAULY, DEVRIES SMITH & DEFFNER, L.L.C.
PLAZA VII-SUITE 3000
45 SOUTH SEVENTH STREET
MINNEAPOLIS, MN 55402-1630

MAILED

AUG 04 2010

OFFICE OF PETITIONS

In re Application of
Veli E. Kalayci, et al.
Application No. 12/542,312
Filed: August 17, 2009
Attorney Docket No. 758.1831USD1

DECISION ON PETITION

This is a decision on the petition under the unintentional provisions of 37 CFR 1.137(b), filed July 12, 2010, to revive the above-identified application.

The application became abandoned for failure to reply in a timely manner to the Notice to File Corrected Application Papers (Notice), mailed August 31, 2009. The Notice set a period for reply of two (2) months from the mail date of the Notice. No extensions of time under the provisions of 37 CFR 1.136(a) were obtained. Accordingly, the application became abandoned on November 1, 2009.

The petition satisfies the requirements of 37 CFR 1.137(b) in that petitioner has supplied (1) the reply in the form of a reply, (2) the petition fee of $1620, and (3) a proper statement of unintentional delay.

In view of the above, the petition is **GRANTED**.

Telephone inquiries concerning this decision should be directed to undersigned at (571) 272-1642. All other inquiries concerning the examination or status of this application should be directed to the Office of Patent Application Papers at their hotline 571-272-4100.

This application is being referred to the Office of Patent Application Papers for pre-examination processing of the reply received July 12, 2010.

April M. Wise
Petitions Examiner
Office of Petitions

UNITED STATES PATENT AND TRADEMARK OFFICE

Commissioner for Patents
United States Patent and Trademark Office
P.O. Box 1450
Alexandria, VA 22313-1450
www.uspto.gov

DIEHL SERVILLA LLC
33 WOOD AVE SOUTH
SECOND FLOOR, SUITE 210
ISELIN NJ 08830

MAILED

OCT 25 2010

OFFICE OF PETITIONS

In re Application of :
Saunders, Paul et al. :
Application No. 12/542,443 : DECISION ON PETITION
Filed: August 17, 2009 : TO WITHDRAW
Attorney Docket No. **ANS0159-00US** : FROM RECORD

This is a decision on the Request to Withdraw as attorney or agent of record under 37 C.F.R. § 1.36(b), filed September 30, 2010.

The request is **moot** because a revocation of power of attorney has been previously filed.

A review of the file record indicates that the power of attorney to DIEHL SERVILLA LLC has been revoked by the assignee of the patent application on September 29, 2010. Accordingly, the request to withdraw under 37 C.F.R. § 1.36(b) is moot.

All future communications from the Office will continue to be directed to the below-listed address until otherwise notified by applicant.

Telephone inquires concerning this decision should be directed to Tredelle Jackson at 571-272-2783.

/Tredelle D. Jackson/
Paralegal Specialist
Office of Petitions

cc: **MOSER IP LAW GROUP/ANSELL LIMITED**
1030 BROAD STREET, SUITE 203
SHREWSBURY NJ 07702

SPE RESPONSE FOR CERTIFICATE OF CORRECTION

Paper No.:20111011

DATE : October 11, 2011

TO SPE OF : ART UNIT 2816

SUBJECT : Request for Certificate of Correction on Patent No.: 7876143

A response is requested with respect to the accompanying request for a certificate of correction.

Please complete this form and return with file, within **7** days to:
Certificates of Correction Branch - PK 3-910
Palm location **7590** - Tel. No. 305-8201

With respect to the change(s) requested, correcting Office and/or Applicant's errors, should the patent read as shown in the certificate of correction? No new matter should be introduced, nor should the scope or meaning of the claims be changed.

Thank You For Your Assistance **Certificates of Correction Branch**

The request for issuing the above-identified correction(s) is hereby:
Note your decision on the appropriate box.

☒ **Approved** **All** changes apply.

☐ **Approved in Part** Specify below which changes **do not** apply.

☐ **Denied** State the reasons for denial below.

Comments:

SPE: /Lincoln Donovan/ **Art Unit** 2816

UNITED STATES PATENT AND TRADEMARK OFFICE

Commissioner for Patents
United States Patent and Trademark Office
P.O. Box 1450
Alexandria, VA 22313-1450
www.uspto.gov

SCHMEISER OLSEN & WATTS
18 E UNIVERSITY DRIVE
SUITE # 101
MESA AZ 85201

MAILED

SEP 14 2011

OFFICE OF PETITIONS

In re Application of
Rob J. Evans
Application No. 12/542,463
Filed: August 17, 2009
Attorney Docket No. EVAN-12871

DECISION ON PETITION
TO WITHDRAW FROM RECORD

This is a decision on the Request to Withdraw as attorney or agent of record under 37 C.F.R. § 1.36(b), filed August 19, 2011.

The request is **APPROVED**.

A grantable request to withdraw as attorney/agent of record must be signed by every attorney/agent seeking to withdraw or contain a clear indication that one attorney is signing on behalf of another/others. The Office will require the practitioner(s) to certify that he, she or they have: (1) given reasonable notice to the client, prior to the expiration of the reply period, which the practitioner(s) intends to withdraw from employment; (2) delivered to the client or a duly authorized representative of the client all papers and property (including funds) to which the client is entitled; and (3) notified the client of any replies that may be due and the time frame within which the client must respond, pursuant to 37 CFR 10.40 (c).

The request was signed by Greg L. Martinez on behalf of all attorneys of record who are associated with Customer Number 23123.

All attorneys/agents associated with the Customer Number 23123 have been withdrawn. Applicant is reminded that there is no attorney of record at this time.

All future correspondence will be directed to the named inventor at the address indicated below.

Currently, there is no outstanding Office action that requires a reply.

Telephone inquiries concerning this decision should be directed to the undersigned at (571) 272-7751. All other inquiries concerning either the examination or status of the application should be directed to the Technology Center.

/Joan Olszewski/
Joan Olszewski
Petitions Examiner
Office of Petitions

cc: Mr. Rob J. Evans
Evans Overhead Door
7043 W. Carol Ann Way
Peoria, AZ 85382

UNITED STATES PATENT AND TRADEMARK OFFICE

UNITED STATES DEPARTMENT OF COMMERCE
United States Patent and Trademark Office
Address: COMMISSIONER FOR PATENTS
P.O. Box 1450
Alexandria, Virginia 22313-1450
www.uspto.gov

APPLICATION NO.	FILING DATE	FIRST NAMED INVENTOR	ATTORNEY DOCKET NO.	CONFIRMATION NO.
12/542,498	08/17/2009	Barry SANDREW	LF-P0029	5608

7590 02/03/2011

ARC PATENTS
7910 IVANHOE AVE. #325
LA JOLLA, CA 92037

EXAMINER
KASSA, YOSEF

ART UNIT	PAPER NUMBER
2624	

NOTIFICATION DATE	DELIVERY MODE
02/03/2011	ELECTRONIC

ACKNOWLEDGEMENT OF REQUEST

Notice of Allowance/Allowability Mailed

The request to print a color drawing reference as the first paragraph in the portion of the specification containing a brief description of the drawings as required by 37 CFR 1.84 and MPEP § 608.02 has been received by the United States Patent and Trademark Office and will be entered into the specification.

571-272-4200 or 1-888-786-0101
Application Assistance Unit
Office of Data Management

FORM PTOM327-5 (Rev. 02/08)

UNITED STATES PATENT AND TRADEMARK OFFICE

Commissioner for Patents
United States Patent and Trademark Office
P.O. Box 1450
Alexandria, VA 22313-1450
www.uspto.gov

February 1, 2011

ARC PATENTS
7910 IVANHOE AVE. #325
LA JOLLA CA 92037

In re Application of	:	
Sandrew, Barry	:	**DECISION ON PETITION**
Application No. 12/542,498	:	
Filed: 08/17/2009	:	***ACCEPTANCE OF COLOR***
Attorney Docket No. LF-P0029	:	***DRAWINGS***

This is a decision on the Petition to Accept Color Drawings under 37 C.F.R 1.84 (a) (2), received in the United States Patent and Trademark Office (USPTO) November 29, 2010.

The petition is **GRANTED**.

A grantable petition under 37 C.F.R. 1.84(a) (2) must be accompanied by the following.

1. The fee set forth under 37 C.F.R. 1.17(h),
2. Three (3) sets of the color drawings in question, or (1) set if filed via EFS, and
3. The specification contains appropriate language referring to the color drawings as the first paragraph in that portion of the specification relating to the brief description of the drawings.

The petition was accompanied by all of the required fees and drawings. The specification contains the appropriate language. Therefore, the petition is GRANTED.

Telephone inquires relating to this decision may be directed to the undersigned in the Office of Data Management at 571-272-4200.

/Diane Terry/
Quality Control Specialist
Office of Data Management
Publications Branch

PTO/SB/20PCT-KR (06-10)
Approved for use through 01/31/2012. OMB 0651-0058
U.S. Patent and Trademark Office; U. S. DEPARTMENT OF COMMERCE
Under the Paperwork Reduction Act of 1995, no persons are required to respond to a collection of information unless it displays a valid OMB control number.

REQUEST FOR PARTICIPATION IN THE PATENT COOPERATION TREATY - PATENT PROSECUTION HIGHWAY (PCT-PPH) PILOT PROGRAM BETWEEN THE KOREAN INTELLECTUAL PROPERTY OFFICE (KIPO) AND THE USPTO

Application No:	12542539	Filing date:	17-AUG-2009
First Named Inventor:	Michael George Colburn		
Title of the Invention:	Rapid Liquid Heating		

THIS REQUEST FOR PARTICIPATION IN THE PCT-PPH PILOT PROGRAM ALONG WITH THE REQUIRED DOCUMENTS MUST BE SUBMITTED VIA EFS-WEB. INFORMATION REGARDING EFS-WEB IS AVAILABLE AT HTTP://WWW.USPTO.GOV/EBC/EFS_HELP.HTML

APPLICANT HEREBY REQUESTS PARTICIPATION IN THE PCT-PPH PROGRAM AND PETITIONS TO MAKE THE ABOVE-IDENTIFIED APPLICATION SPECIAL UNDER THE PCT-PPH PROGRAM.

The above-identified application is (1) a national stage entry of the corresponding PCT application, or (2) a national stage entry of another PCT application which claims priority to the corresponding PCT application, or (3) a national application that claims domestic/ foreign priority to the corresponding PCT application, or (4) a national application which forms the basis for the priority claim in the corresponding PCT application, or (5) a continuing application of a U.S. application that satisfies one of (1) to (4) above, or (6) a U.S. application that claims domestic benefit to a U.S. provisional application which forms the basis for the priority claim in the corresponding PCT application.

The corresponding PCT application number(s) is/are: PCT/US09/53798

The international date of the corresponding PCT application(s) is/are: 13 Aug 2009

I. List of Required Documents:

a. **A copy of the latest international work product (WO/ISA, WO/IPEA, or IPER) in the above–identified corresponding PCT application(s)**

☐ Is attached.

☒ Is not attached because the document is already in the U.S. application.

b. **A copy of all claims which were indicated as having novelty, inventive step and industrial applicability in the above-identified corresponding PCT application(s).**

☐ Is attached.

☒ Is not attached because the document is already in the U.S. application.

c. **English translations of the documents in a. and b. above are attached (if the documents are not in the English language). A statement that the English translation is accurate is attached for the document in b. above.**

This collection of information is required by 35 U.S.C. 119, 37 CFR 1.55, and 37 CFR 1.102(d). The information is required to obtain or retain a benefit by the public, which is to file (and by the USPTO to process) an application. Confidentiality is governed by 35 U.S.C. 122 and 37 CFR 1.11 and 1.14. This collection is estimated to take 2 hours to complete, including gathering, preparing, and submitting the completed application form to the USPTO. Time will vary depending upon the individual case. Any comments on the amount of time you require to complete this form and/or suggestions for reducing this burden should be sent to the Chief Information Officer, U.S. Patent and Trademark Office, U.S. Department of Commerce, P.O. Box 1450, Alexandria, VA 22313-1450. DO NOT SEND FEES OR COMPLETED FORMS TO THIS ADDRESS.

Approved for use through 01/31/2012. OMB 0651-0058
U.S.Patent and Trademark Office; U.S. DEPARTMENT OF COMMERCE
Under the Paperwork Reduction Act of 1995, no persons are required to respond to a collection of information unless it displays a valid OMB control number.

REQUEST FOR PARTICIPATION IN THE PCT-PPH PILOT PROGRAM BETWEEN THE KIPO AND THE USPTO

(continued)

Application No.:	12542539
First Named Inventor:	Michael George Colburn

d. **(1) An information disclosure statement listing the documents cited in the international work products (ISR, WO/ISA, WO/IPEA, IPER) of the corresponding PCT application.**

☐ Is attached

☒ Has already been filed in the above-identified U.S. application on 4 June 2010

(2) Copies of all documents (except) for U.S. patents or U.S. patent application publications)

☒ Are attached.

Have already been filed in the above-identified U.S. application on 4 June 2010

II. Claims Correspondence Table:

Claims in US Application	Patentable Claims in the corresponding PCT Application	Explanation regarding the correspondence
1-22	1-22	claims are identical

III. All the claims in the US application sufficiently correspond to the patentable claims in the corresponding PCT application.

Signature	/James Marc Leas/	Date	24 September 2010
Name (Print/Typed)	James Marc Leas	Registration Number	34372

Privacy Act Statement

The **Privacy Act of 1974 (P.L. 93-579)** requires that you be given certain information in connection with your submission of the attached form related to a patent application or patent. Accordingly, pursuant to the requirements of the Act, please be advised that: (1) the general authority for the collection of this information is 35 U.S.C. 2(b)(2); (2) furnishing of the information solicited is voluntary; and (3) the principal purpose for which the information is used by the U.S. Patent and Trademark Office is to process and/or examine your submission related to a patent application or patent. If you do not furnish the requested information, the U.S. Patent and Trademark Office may not be able to process and/or examine your submission, which may result in termination of proceedings or abandonment of the application or expiration of the patent.

The information provided by you in this form will be subject to the following routine uses:

1. The information on this form will be treated confidentially to the extent allowed under the Freedom of Information Act (5 U.S.C. 552) and the Privacy Act (5 U.S.C 552a). Records from this system of records may be disclosed to the Department of Justice to determine whether disclosure of these records is required by the Freedom of Information Act.
2. A record from this system of records may be disclosed, as a routine use, in the course of presenting evidence to a court, magistrate, or administrative tribunal, including disclosures to opposing counsel in the course of settlement negotiations.
3. A record in this system of records may be disclosed, as a routine use, to a Member of Congress submitting a request involving an individual, to whom the record pertains, when the individual has requested assistance from the Member with respect to the subject matter of the record.
4. A record in this system of records may be disclosed, as a routine use, to a contractor of the Agency having need for the information in order to perform a contract. Recipients of information shall be required to comply with the requirements of the Privacy Act of 1974, as amended, pursuant to 5 U.S.C. 552a(m).
5. A record related to an International Application filed under the Patent Cooperation Treaty in this system of records may be disclosed, as a routine use, to the International Bureau of the World Intellectual Property Organization, pursuant to the Patent Cooperation Treaty.
6. A record in this system of records may be disclosed, as a routine use, to another federal agency for purposes of National Security review (35 U.S.C. 181) and for review pursuant to the Atomic Energy Act (42 U.S.C. 218(c)).
7. A record from this system of records may be disclosed, as a routine use, to the Administrator, General Services, or his/her designee, during an inspection of records conducted by GSA as part of that agency's responsibility to recommend improvements in records management practices and programs, under authority of 44 U.S.C. 2904 and 2906. Such disclosure shall be made in accordance with the GSA regulations governing inspection of records for this purpose, and any other relevant (*i.e.*, GSA or Commerce) directive. Such disclosure shall not be used to make determinations about individuals.
8. A record from this system of records may be disclosed, as a routine use, to the public after either publication of the application pursuant to 35 U.S.C. 122(b) or issuance of a patent pursuant to 35 U.S.C. 151. Further, a record may be disclosed, subject to the limitations of 37 CFR 1.14, as a routine use, to the public if the record was filed in an application which became abandoned or in which the proceedings were terminated and which application is referenced by either a published application, an application open to public inspection or an issued patent.
9. A record from this system of records may be disclosed, as a routine use, to a Federal, State, or local law enforcement agency, if the USPTO becomes aware of a violation or potential violation of law or regulation.

UNITED STATES PATENT AND TRADEMARK OFFICE

UNITED STATES DEPARTMENT OF COMMERCE
United States Patent and Trademark Office
Address: COMMISSIONER FOR PATENTS
P.O. Box 1450
Alexandria, Virginia 22313-1450
www.uspto.gov

APPLICATION NO.	FILING DATE	FIRST NAMED INVENTOR	ATTORNEY DOCKET NO.	CONFIRMATION NO.
12/542,539	08/17/2009	Michael George Colburn	221-002	5683

26542 7590 09/27/2010
JAMES MARC LEAS
Law Office Of James Marc Leas
37 BUTLER DRIVE
S. BURLINGTON, VT 05403

EXAMINER
CAMPBELL, THOR S

ART UNIT	PAPER NUMBER
3742	

MAIL DATE	DELIVERY MODE
09/27/2010	PAPER

Please find below and/or attached an Office communication concerning this application or proceeding.

The time period for reply, if any, is set in the attached communication.

UNITED STATES PATENT AND TRADEMARK OFFICE

Commissioner for Patents
United States Patent and Trademark Office
P.O. Box 1450
Alexandria, VA 22313-1450
www.uspto.gov

JAMES MARC LEAS
Law Office Of James Marc Leas
37 BUTLER DRIVE
S. BURLINGTON VT 05403

In re Application of	:	
COLBURN, MICHAEL GEORGE et al	:	DECISION ON REQUEST TO
Application No. 12/542,539	:	PARTICIPATE IN PATENT
Filed: Aug. 17, 2009	:	PCT/PROSECUTION HIGHWAY
Attorney Docket No. 221-002	:	PROGRAM AND PETITION
Title: RAPID LIQUID HEATING	:	37 CFR 1.102(d)

This is a decision on the request to participate in the Patent Prosecution Highway (PPH) program and the petition under 37 CFR 1.102(d), filed Sep. 25, 2010, to make the above-identified application special.

The request and petition are Dismissed.

A grantable request to participate in the PPH program and petition to make special require:
(1) The U.S. application must disclose an eligible relationship to one or more PCT applications filed in the KIPO, JPO, EPO or USPTO;
(2) Applicant must submit a copy of the allowable/patentable claim(s) from the PCT application(s) latest international work product (the written opinion or the IPER) along with an English translation thereof and a statement that the English translation is accurate;
(3) All the claims in the U.S. application must sufficiently correspond or be amended to sufficiently correspond to the allowable/patentable claim(s) in the PCT application(s);
(4) Examination of the U.S. application has not begun;
(5) Applicant must submit a copy of the latest international work product from the PCT application containing the allowable/patentable claim(s) along with an English translation thereof and a statement that the English translation is accurate; and
(6) Applicant must submit an IDS listing the documents cited by the PCT examiner in the international work product along with copies of documents except U.S. patents or U.S. patent application publications.

The request to participate in the PPH program and petition met all conditions except Items # 6 above. The request to participate in the PPH program and petition fail to include a copy of the PCT/KIPO cited references, namely, KR 10-2008-0030842 A published on 07.04.2008. An IDS (Form 1499) listing all prior art references cited in the International Search Report must be provided, if not previously filed.

Applicant is encouraged to cite and submit all relevant prior art references, if any, to facilitate examination in this application.

Applicant is given a time period of **ONE MONTH or THIRTY DAYS**, whichever is longer, from the mailing date of this decision to correct the deficiencies. **NO EXTENSION OF TIME UNDER 37 CFR 1.136 IS PERMITTED.** If the deficiencies are not corrected with the time period given, the application will await action in its regular turn. Response must be filed via EFS-Web.

Telephone inquiries concerning this decision should be directed to Henry C. Yuen at 571-272-4856.

Petition is **dismissed**.

/Henry C. Yuen/

Henry C. Yuen, Special Programs Examiner
Technology Center 3700 – Mechanical Engineering,
Manufacturing and Products
571-272-4856

PATENT

IN THE UNITED STATES PATENT AND TRADEMARK OFFICE

In re the Application of: Colburn, et al
Application No.: 12/542,539
Filing Date: August 17, 2009
Title: Rapid Liquid Heating

Docket No. 221-002
Date: September 30, 2010
Group Art Unit: 3744
Examiner:

Request for Reconsideration of Request for Patent Prosecution Highway Replacement Foreign references for IDS

Commissioner for Patents
PO Box 1450
Alexandria, VA 22313-1450

Sir:

In response to the decision dismissing the request to participate in the Patent Prosecution Highway program applicant requests reconsideration. Applicant is submitting corrected replacement references to correct the deficiency.

Thank you very much for considering this matter.

Respectfully submitted,
For: Michael George Colburn

/James M. Leas/

By: James M. Leas
Registration Number 34,372
Tel: (802) 864-1575

James M. Leas
37 Butler Drive
S. Burlington, Vermont 0540

UNITED STATES PATENT AND TRADEMARK OFFICE

UNITED STATES DEPARTMENT OF COMMERCE
United States Patent and Trademark Office
Address: COMMISSIONER FOR PATENTS
P.O. Box 1450
Alexandria, Virginia 22313-1450
www.uspto.gov

APPLICATION NO.	FILING DATE	FIRST NAMED INVENTOR	ATTORNEY DOCKET NO.	CONFIRMATION NO.
12/542,539	08/17/2009	Michael George Colburn	221-002	5683

26542 7590 10/01/2010
JAMES MARC LEAS
Law Office Of James Marc Leas
37 BUTLER DRIVE
S. BURLINGTON, VT 05403

EXAMINER
CAMPBELL, THOR S

ART UNIT	PAPER NUMBER
3742	

MAIL DATE	DELIVERY MODE
10/01/2010	PAPER

Please find below and/or attached an Office communication concerning this application or proceeding.

The time period for reply, if any, is set in the attached communication.

UNITED STATES PATENT AND TRADEMARK OFFICE

Commissioner for Patents
United States Patent and Trademark Office
P.O. Box 1450
Alexandria, VA 22313-1450
www.uspto.gov

JAMES MARC LEAS
Law Office Of James Marc Leas
37 BUTLER DRIVE
S. BURLINGTON VT 05403

In re Application of	:	
COLBURN, MICHAEL GEORGE et al	:	DECISION ON REQUEST TO
Application No. 12/542,539	:	PARTICIPATE IN PATENT
Filed: Aug. 17, 2009	:	PCT/PROSECUTION HIGHWAY
Attorney Docket No. 221-002	:	PROGRAM AND PETITION
Title: RAPID LIQUID HEATING	:	37 CFR 1.102(d)

This is a decision on the renewed request to participate in the Patent Prosecution Highway (PPH) program and the petition under 37 CFR 1.102(d), filed Sep. 30, 2010, to make the above-identified application special.

The request and petition are granted.

A grantable request to participate in the PPH program and petition to make special require:
(1) The U.S. application must disclose an eligible relationship to one or more PCT applications filed in the KIPO, JPO, EPO or USPTO;
(2) Applicant must submit a copy of the allowable/patentable claim(s) from the PCT application(s) latest international work product (the written opinion or the IPER) along with an English translation thereof and a statement that the English translation is accurate;
(3) All the claims in the U.S. application must sufficiently correspond or be amended to sufficiently correspond to the allowable/patentable claim(s) in the PCT application(s);
(4) Examination of the U.S. application has not begun;
(5) Applicant must submit a copy of the latest international work product from the PCT application containing the allowable/patentable claim(s) along with an English translation thereof and a statement that the English translation is accurate; and
(6) Applicant must submit an IDS listing the documents cited by the PCT examiner in the international work product along with copies of documents except U.S. patents or U.S. patent application publications.

In light of the petition being properly submitted, the request to participate in the PPH program and the petition comply with the above requirements. Accordingly, the above-identified application has been accorded "special" status.

The applicant is encouraged to cite and submit all relevant prior art references, if any, to facilitate examination in this application.

Other inquiries concerning the examination or status of the application should be directed to Tu Hoang the SPE of Art Unit 3742 and 571-272-4780 for Class 392/313 and also accessible in the PAIR system at http://www.uspto.gov/ebc.index.html.

All other inquiries concerning the examination or status of the application should be directed to the Patent Application Information Retrieval (PAIR) system.

This application will be docketed to an examiner for action on the merits commensurate with this decision.

Telephone inquiries concerning this decision should be directed to Henry C. Yuen, at 571-272-4856.

The petition is **granted.**

/Henry C. Yuen/

Henry C. Yuen, Special Programs Examiner
Technology Center 3700 – Mechanical Engineering,
Manufacturing and Products
571-272-4856

UNITED STATES PATENT AND TRADEMARK OFFICE

UNITED STATES DEPARTMENT OF COMMERCE
United States Patent and Trademark Office
Address: COMMISSIONER FOR PATENTS
P.O. Box 1450
Alexandria, Virginia 22313-1450
www.uspto.gov

APPLICATION NO.	FILING DATE	FIRST NAMED INVENTOR	ATTORNEY DOCKET NO.	CONFIRMATION NO.
12/542,566	08/17/2009	Koji HACHIYA	KATOSH.025AUS	5725

7590 11/01/2010
KNOBBE MARTENS OLSON & BEAR LLP
2040 MAIN STREET
FOURTEENTH FLOOR
IRVINE, CA 92614

EXAMINER
TSAI, HENRY

ART UNIT	PAPER NUMBER
2184	

NOTIFICATION DATE	DELIVERY MODE
11/01/2010	ELECTRONIC

DECISION GRANTING PETITION UNDER 37 CFR 1.138(d)

The declaration of express abandonment is recognized

This is in response to the petition under 37 CFR 1.138(d), requesting for a refund of any previously paid search fee and excess claims fee in the above-identified application.

The petition is granted.

The express abandonment is recognized. Any previously paid search fee and excess claims fee are hereby refunded.

Telephone inquiries should be directed to the Office of Data Management at (571) 272-4200.

Betty Powell

Patent Publication Branch
Office of Data Management

FORM PET651G (Rev. 08/07)

UNITED STATES PATENT AND TRADEMARK OFFICE

Commissioner for Patents
United States Patent and Trademark Office
P.O. Box 1450
Alexandria, VA 22313-1450
www.uspto.gov

SHAY GLENN LLP
2755 CAMPUS DRIVE
SUITE 210
SAN MATEO CA 94403

MAILED

SEP 13 2010

OFFICE OF PETITIONS

In re Application of	:	
Isbell, Lewis Jr.	:	
Application No. 12/542,589	:	DECISION ON PETITION
Filed: August 17, 2009	:	TO WITHDRAW
Attorney Docket No. **10112-713.200**	:	FROM RECORD

This is a decision on the Request to Withdraw as attorney or agent of record under 37 C.F.R. § 1.36(b), filed August 17, 2010.

The request is **MOOT** because a revocation of power of attorney has been previously filed.

A review of the file record indicates that the power of attorney to SHAY GLENN LLP has been revoked by the assignee of the patent application on September 03, 2010. Accordingly, the request to withdraw under 37 C.F.R. § 1.36(b) is moot.

All future communications from the Office will continue to be directed to the below-listed address until otherwise notified by applicant.

Telephone inquires concerning this decision should be directed to Tredelle Jackson at 571-272-2783.

/Tredelle D. Jackson/
Paralegal Specialist
Office of Petitions

cc: **PATENT DEPT.**
INTUITIVE SURGICAL OPERATIONS, INC.
1266 KIFER ROAD BLDG. 101
SUNNYVALE CA 94086

UNITED STATES PATENT AND TRADEMARK OFFICE

Commissioner for Patents
United States Patent and Trademark Office
P.O. Box 1450
Alexandria, VA 22313-1450
www.uspto.gov

IBM CORPORATION
3039 CORNWALLIS RD.
DEPT. T81/B503, PO BOX 12195
RESEARCH TRIANGLE PARK NC 27709

MAILED

AUG 10 2010

OFFICE OF PETITIONS

In re Application of	:	
Steven M. Miller et al	:	
Application No. 12/542,590	:	DECISION GRANTING PETITION
Filed: August 17, 2009	:	UNDER 37 CFR 1.313(c)(2)
Attorney Docket No. RSW920030284US2	:	

This is a decision on the petition under 37 CFR 1.313(c)(2), filed August 9, 2010, to withdraw the above-identified application from issue after payment of the issue fee.

The petition is **GRANTED**.

The above-identified application is withdrawn from issue for consideration of a submission under 37 CFR 1.114 (request for continued examination). *See* 37 CFR 1.313(c)(2).

Petitioner is advised that the issue fee paid on July 28, 2010 cannot be refunded. If, however, this application is again allowed, petitioner may request that it be applied towards the issue fee required by the new Notice of Allowance.[1]

Telephone inquiries should be directed to the undersigned at (571) 272-3208.

This application is being referred to Technology Center AU 2179 for processing of the request for continued examination under 37 CFR 1.114 and for consideration of the concurrently filed IDS.

/Karen Creasy/
Karen Creasy
Petitions Examiner
Office of Petitions

[1] *The request to apply the issue fee to the new Notice may be satisfied by completing and returning the new Part B – Fee(s) Transmittal Form (along with any balance due at the time of submission). Petitioner is advised that the Issue Fee Transmittal Form must be completed and timely submitted to avoid abandonment of the application.*

UNITED STATES PATENT AND TRADEMARK OFFICE

Commissioner for Patents
United States Patent and Trademark Office
P.O. Box 1450
Alexandria, VA 22313-1450
www.uspto.gov

MAILED
MAR 27 2012
OFFICE OF PETITIONS

ROBERT A PARSONS
4000 N CENTRAL AVENUE SUITE 1220
PHOENIX AZ 85012

In re Application of	:	
Shieh, et al.	:	
Application No. 12/542,599	:	ON PETITION
Filed: August 17, 2009	:	
Attorney Docket No. 4674-A18	:	

This is a decision on the petition to revive under 37 CFR 1.137(b), filed March 2, 2012.

The petition under 37 CFR 1.137(b) is **GRANTED**.

The above application became abandoned for failure to timely file a reply to the non-final Office action mailed June 16, 2011. This Office set a shortened statutory period for reply of three months. No reply having been received, the application became abandoned on September 17, 2011. The Office mailed a Notice of Abandonment on January 20, 2012.

With the instant petition, petitioner has made the proper statement of unintentional delay, paid the petition fee, and submitted the required reply in the form of an Amendment.

The application is being forwarded to Group Art Unit 2895 for consideration of the Amendment, filed March 2, 2012.

Telephone inquiries related to this decision should be directed to the undersigned at (571)272-3207.

Cliff Congo
Petitions Attorney
Office of Petitions

PTO/SB/20PCT-KR (06-10)
Approved for use through 01/31/2012. OMB 0651-0058
U.S. Patent and Trademark Office; U. S. DEPARTMENT OF COMMERCE
Under the Paperwork Reduction Act of 1995, no persons are required to respond to a collection of information unless it displays a valid OMB control number.

REQUEST FOR PARTICIPATION IN THE PATENT COOPERATION TREATY - PATENT PROSECUTION HIGHWAY (PCT-PPH) PILOT PROGRAM BETWEEN THE KOREAN INTELLECTUAL PROPERTY OFFICE (KIPO) AND THE USPTO

Application No:	12542604	Filing date:	17 August 2009
First Named Inventor:	Michael George Colburn		
Title of the Invention:	Food Steamer Containers with Sequential Ohmic Water Heating		

THIS REQUEST FOR PARTICIPATION IN THE PCT-PPH PILOT PROGRAM ALONG WITH THE REQUIRED DOCUMENTS MUST BE SUBMITTED VIA EFS-WEB. INFORMATION REGARDING EFS-WEB IS AVAILABLE AT HTTP://WWW.USPTO.GOV/EBC/EFS_HELP.HTML

APPLICANT HEREBY REQUESTS PARTICIPATION IN THE PCT-PPH PROGRAM AND PETITIONS TO MAKE THE ABOVE-IDENTIFIED APPLICATION SPECIAL UNDER THE PCT-PPH PROGRAM.

The above-identified application is (1) a national stage entry of the corresponding PCT application, or (2) a national stage entry of another PCT application which claims priority to the corresponding PCT application, or (3) a national application that claims domestic/ foreign priority to the corresponding PCT application, or (4) a national application which forms the basis for the priority claim in the corresponding PCT application, or (5) a continuing application of a U.S. application that satisfies one of (1) to (4) above, or (6) a U.S. application that claims domestic benefit to a U.S. provisional application which forms the basis for the priority claim in the corresponding PCT application.

The corresponding PCT application number(s) is/are: PCT/US09/53794

The international date of the corresponding PCT application(s) is/are: 13-AUG-2009

I. List of Required Documents:

a. **A copy of the latest international work product (WO/ISA, WO/IPEA, or IPER) in the above–identified corresponding PCT application(s)**

☐ Is attached.

☒ Is not attached because the document is already in the U.S. application.

b. **A copy of all claims which were indicated as having novelty, inventive step and industrial applicability in the above-identified corresponding PCT application(s).**

☐ Is attached.

☒ Is not attached because the document is already in the U.S. application.

c. **English translations of the documents in a. and b. above are attached (if the documents are not in the English language). A statement that the English translation is accurate is attached for the document in b. above.**

This collection of information is required by 35 U.S.C. 119, 37 CFR 1.55, and 37 CFR 1.102(d). The information is required to obtain or retain a benefit by the public, which is to file (and by the USPTO to process) an application. Confidentiality is governed by 35 U.S.C. 122 and 37 CFR 1.11 and 1.14. This collection is estimated to take 2 hours to complete, including gathering, preparing, and submitting the completed application form to the USPTO. Time will vary depending upon the individual case. Any comments on the amount of time you require to complete this form and/or suggestions for reducing this burden should be sent to the Chief Information Officer, U.S. Patent and Trademark Office, U.S. Department of Commerce, P.O. Box 1450, Alexandria, VA 22313-1450. DO NOT SEND FEES OR COMPLETED FORMS TO THIS ADDRESS.

Approved for use through 01/31/2012. OMB 0651-0058
U.S.Patent and Trademark Office; U.S. DEPARTMENT OF COMMERCE
Under the Paperwork Reduction Act of 1995, no persons are required to respond to a collection of information unless it displays a valid OMB control number.

REQUEST FOR PARTICIPATION IN THE PCT-PPH PILOT PROGRAM BETWEEN THE KIPO AND THE USPTO

(continued)

Application No.:	12542604
First Named Inventor:	Michael George Colburn

d. **(1) An information disclosure statement listing the documents cited in the international work products (ISR, WO/ISA, WO/IPEA, IPER) of the corresponding PCT application.**

☐ Is attached

☒ Has already been filed in the above-identified U.S. application on 6 Aug. 2010

(2) Copies of all documents (except) for U.S. patents or U.S. patent application publications)

☒ Are attached.

Have already been filed in the above-identified U.S. application on 6 Aug. 2010

II. Claims Correspondence Table:

Claims in US Application	Patentable Claims in the corresponding PCT Application	Explanation regarding the correspondence
1-27	1-27	claims are identical
28-31	28-31	canceled in US application
32-38	32-38	claims are identical
39-44	39-44	canceled in US application

III. All the claims in the US application sufficiently correspond to the patentable claims in the corresponding PCT application.

Signature	/James Marc Leas/	Date	September 24, 2010
Name (Print/Typed)	James Marc Leas	Registration Number	34372

Privacy Act Statement

The **Privacy Act of 1974 (P.L. 93-579)** requires that you be given certain information in connection with your submission of the attached form related to a patent application or patent. Accordingly, pursuant to the requirements of the Act, please be advised that: (1) the general authority for the collection of this information is 35 U.S.C. 2(b)(2); (2) furnishing of the information solicited is voluntary; and (3) the principal purpose for which the information is used by the U.S. Patent and Trademark Office is to process and/or examine your submission related to a patent application or patent. If you do not furnish the requested information, the U.S. Patent and Trademark Office may not be able to process and/or examine your submission, which may result in termination of proceedings or abandonment of the application or expiration of the patent.

The information provided by you in this form will be subject to the following routine uses:

1. The information on this form will be treated confidentially to the extent allowed under the Freedom of Information Act (5 U.S.C. 552) and the Privacy Act (5 U.S.C 552a). Records from this system of records may be disclosed to the Department of Justice to determine whether disclosure of these records is required by the Freedom of Information Act.
2. A record from this system of records may be disclosed, as a routine use, in the course of presenting evidence to a court, magistrate, or administrative tribunal, including disclosures to opposing counsel in the course of settlement negotiations.
3. A record in this system of records may be disclosed, as a routine use, to a Member of Congress submitting a request involving an individual, to whom the record pertains, when the individual has requested assistance from the Member with respect to the subject matter of the record.
4. A record in this system of records may be disclosed, as a routine use, to a contractor of the Agency having need for the information in order to perform a contract. Recipients of information shall be required to comply with the requirements of the Privacy Act of 1974, as amended, pursuant to 5 U.S.C. 552a(m).
5. A record related to an International Application filed under the Patent Cooperation Treaty in this system of records may be disclosed, as a routine use, to the International Bureau of the World Intellectual Property Organization, pursuant to the Patent Cooperation Treaty.
6. A record in this system of records may be disclosed, as a routine use, to another federal agency for purposes of National Security review (35 U.S.C. 181) and for review pursuant to the Atomic Energy Act (42 U.S.C. 218(c)).
7. A record from this system of records may be disclosed, as a routine use, to the Administrator, General Services, or his/her designee, during an inspection of records conducted by GSA as part of that agency's responsibility to recommend improvements in records management practices and programs, under authority of 44 U.S.C. 2904 and 2906. Such disclosure shall be made in accordance with the GSA regulations governing inspection of records for this purpose, and any other relevant (*i.e.*, GSA or Commerce) directive. Such disclosure shall not be used to make determinations about individuals.
8. A record from this system of records may be disclosed, as a routine use, to the public after either publication of the application pursuant to 35 U.S.C. 122(b) or issuance of a patent pursuant to 35 U.S.C. 151. Further, a record may be disclosed, subject to the limitations of 37 CFR 1.14, as a routine use, to the public if the record was filed in an application which became abandoned or in which the proceedings were terminated and which application is referenced by either a published application, an application open to public inspection or an issued patent.
9. A record from this system of records may be disclosed, as a routine use, to a Federal, State, or local law enforcement agency, if the USPTO becomes aware of a violation or potential violation of law or regulation.

UNITED STATES PATENT AND TRADEMARK OFFICE

UNITED STATES DEPARTMENT OF COMMERCE
United States Patent and Trademark Office
Address: COMMISSIONER FOR PATENTS
P.O. Box 1450
Alexandria, Virginia 22313-1450
www.uspto.gov

APPLICATION NO.	FILING DATE	FIRST NAMED INVENTOR	ATTORNEY DOCKET NO.	CONFIRMATION NO.
12/542,604	08/17/2009	Michael George Colburn	221-003	5784

26542 7590 09/27/2010
JAMES MARC LEAS
Law Office Of James Marc Leas
37 BUTLER DRIVE
S. BURLINGTON, VT 05403

EXAMINER	
ART UNIT	PAPER NUMBER
3742	

MAIL DATE	DELIVERY MODE
09/27/2010	PAPER

Please find below and/or attached an Office communication concerning this application or proceeding.

The time period for reply, if any, is set in the attached communication.

UNITED STATES PATENT AND TRADEMARK OFFICE

Commissioner for Patents
United States Patent and Trademark Office
P.O. Box 1450
Alexandria, VA 22313-1450
www.uspto.gov

JAMES MARC LEAS
Law Office Of James Marc Leas
37 BUTLER DRIVE
S. BURLINGTON VT 05403

In re Application of	:	
COLBURN, MICHAEL GEORGE et al	:	DECISION ON REQUEST TO
Application No. 12/542,604	:	PARTICIPATE IN PATENT
Filed: Aug. 17, 2009	:	PCT/PROSECUTION HIGHWAY
Attorney Docket No. 221-003	:	PROGRAM AND PETITION
Title: FOOD STEAMER CONTAINERS WITH SEQUENTIAL OHMIC WATER HEATING	:	37 CFR 1.102(d)

This is a decision on the renewed request to participate in the Patent Prosecution Highway (PPH) program and the petition under 37 CFR 1.102(d), filed September 25, 2010, to make the above-identified application special.

The request and petition are granted if the holding of the abandonment is withdrawn by the Petitions Office.

A grantable request to participate in the PPH program and petition to make special require:
(1) The U.S. application must disclose an eligible relationship to one or more PCT applications filed in the KIPO, JPO, EPO or USPTO;
(2) Applicant must submit a copy of the allowable/patentable claim(s) from the PCT application(s) latest international work product (the written opinion or the IPER) along with an English translation thereof and a statement that the English translation is accurate;
(3) All the claims in the U.S. application must sufficiently correspond or be amended to sufficiently correspond to the allowable/patentable claim(s) in the PCT application(s);
(4) Examination of the U.S. application has not begun;
(5) Applicant must submit a copy of the latest international work product from the PCT application containing the allowable/patentable claim(s) along with an English translation thereof and a statement that the English translation is accurate; and
(6) Applicant must submit an IDS listing the documents cited by the PCT examiner in the international work product along with copies of documents except U.S. patents or U.S. patent application publications.

In light of the petition being properly submitted, the request to participate in the PPH program and the petition comply with the above requirements. Accordingly, the above-identified application will be accorded "special" status when the petition to withdraw holding of abandonment is granted.

The applicant is encouraged to cite and submit all relevant prior art references, if any, to facilitate examination in this application.

All other inquiries concerning the examination or status of the application should be directed to Tu Hoang, the SPE of Art Unit 3742 and 571-272-4780 for Class 219/121 and also accessible in the PAIR system at http://www.uspto.gov/ebc.index.html.

All other inquiries concerning the examination or status of the application should be directed to the Patent Application Information Retrieval (PAIR) system.

The application was incomplete during the pre-examination processing. The notice of abandonment was sent on May 10, 2010. The petition to withdrawn holding of abandonment will be decided by the Petitions Office in due course. Upon revival of the application and completion of remaining pre-examination process, the application will be forwarded and docketed to an examiner for action on the merits commensurate with this decision.

Telephone inquiries concerning this decision should be directed to Henry C. Yuen, at 571-272-4856.

The petition is **granted.**

/Henry C. Yuen/

Henry C. Yuen, Special Programs Examiner
Technology Center 3700 – Mechanical Engineering,
Manufacturing and Products
571-272-4856

UNITED STATES PATENT AND TRADEMARK OFFICE

Commissioner for Patents
United States Patent and Trademark Office
P.O. Box 1450
Alexandria, VA 22313-1450
www.uspto.gov

JAMES MARC LEAS
LAW OFFICE OF JAMES MARC LEAS
37 BUTLER DRIVE
S. BURLINGTON VT 05403

MAILED
JAN 26 2011
OFFICE OF PETITIONS

In re Application of	:	
Michael George Colburn et al	:	
Application No. 12/542,604	:	DECISION ON PETITION
Filed: August 17, 2009	:	
Attorney Docket No. 221-003	:	

This is a decision on the petition, filed May 11, 2010, under 37 CFR 1.181 (a)(no fee) requesting withdrawal of the holding of abandonment in the above-identified application.

The petition is **GRANTED**.

This application was held abandoned for failure to reply to the Notice To File Corrected Application Papers (Notice) mailed August 31, 2009, which set a period of two months for reply. A Notice of Abandonment was mailed on May 10, 2010.

Petitioner asserts that the Office Notice dated August 31, 2009 was not received.

A review of the written record indicates no irregularity in the mailing of the Office action, and, in the absence of any irregularity, there is a strong presumption that the Office action was properly mailed to the practitioner at the address of record. This presumption may be overcome by a showing that the Office action was not in fact received. In this regard, the showing required to establish the failure to receive the Office action must consist of the following:

1. a statement from practitioner stating that the Office action was not received by the practitioner;

2. a statement from the practitioner attesting to the fact that a search of the file jacket and docket records indicates that the Office action was not received;

3. a statement from the practitioner describing the system used for recording an Office action received at the correspondence address of record with the USPTO. The statement should establish that the docketing system is sufficiently reliable, and

4. a copy of the practitioner's record(s) required to show non-receipt of the Office action should include the master docket for the firm. That is, if a three month period for reply was set in the nonreceived Office action, a copy of the master docket report showing all replies docketed for a date three months from the mail date of the nonreceived Office action must be submitted as documentary proof of nonreceipt of the Office action. If no such master docket exists, the practitioner should so state and provide other evidence such as, but not limited to, the following: the application file jacket; incoming mail log; calendar; reminder system; or the individual docket record for the application in question.

See MPEP § 711.03(c) under subheading "Petition to Withdraw Holding of Abandonment Based on Failure to Receive Office Action," and "Withdrawing the Holding of Abandonment When Office Actions Are Not Received," 1156 Official Gazette 53 (November 16, 1993).

The petition satisfies the above-stated requirements. Accordingly, the application was not abandoned in fact.

In view of the above, the Notice of Abandonment is hereby vacated and the holding of abandonment withdrawn.

This application is being referred to the Office of Patent Application Processing for re-mailing the Office Notice of August 31, 2009. The period for reply will run from the mailing date of the Notice.

/KOC/
Karen Creasy
Petitions Examiner
Office of Petitions
571-272-3208

UNITED STATES PATENT AND TRADEMARK OFFICE

Commissioner for Patents
United States Patent and Trademark Office
P.O. Box 1450
Alexandria, VA 22313-1450
www.uspto.gov

JAMES MARC LEAS
LAW OFFICE OF JAMES MARC LEAS
37 BUTLER DRIVE
S. BURLINGTON VT 05403

MAILED

NOV 28 2011

OFFICE OF PETITIONS

In re Application of	:	
Colburn et al.	:	
Application No. 12/542,604	:	DECISION ON PETITION
Filed: August 17, 2009	:	
Attorney Docket No. 221-003	:	

This is a decision on the petition under the unintentional provisions of 37 CFR 1.137(b), filed October 18, 2011, to revive the above-identified application.

The petition is **GRANTED**.

The above-identified application became abandoned for failure to reply in a proper and timely manner to the Notice to File Corrected Application Papers (Notice) mailed February 2, 2011, which set a shortened statutory period for reply of two (2) months. A one-month extension of time under the provisions of 37 CFR 1.136(a) was obtained. Accordingly, the above-identified application became abandoned on May 3, 2011. A Notice of Abandonment was mailed on October 14, 2011.

The petition satisfies the requirements of 37 CFR 1.137(b) in that petitioner has supplied (1) Replacement drawings (previously submitted May 3, 2011 (2) the petition fee of $930.00, and (3) a proper statement of unintentional delay.

Additionally, 37 CFR 1.137(b)(3) requires a statement that "the entire delay in filing the required reply from the due date for the reply until the filing of a grantable petition pursuant to 37 CFR 1.137(b) was unintentional." Since the statement appearing in the petition varies from the language required by 37 CFR 1.137(b)(3), the statement is being construed as the required statement. Petitioner must notify the Office if this is **not** a correct reading of the statement appearing in the petition.

Telephone inquiries concerning this decision should be directed to the undersigned at (571) 272-7751.

This application is being referred to the Office of Patent Application Processing for further processing in accordance with this decision on petition.

/Joan Olszewski/
Joan Olszewski
Petitions Examiner
Office of Petitions

UNITED STATES PATENT AND TRADEMARK OFFICE

Commissioner for Patents
United States Patent and Trademark Office
P.O. Box 1450
Alexandria, VA 22313-1450
www.uspto.gov

DLA PIPER LLP (US)
2000 UNIVERSITY AVENUE
EAST PALO ALTO CA 94303-2248

MAILED

AUG 27 2010

OFFICE OF PETITIONS

In re Application of	:	DECISION ON PETITION
Faria et al.	:	TO WITHDRAW
Application No. 12/542,611	:	FROM RECORD
Filed: August 17, 2009	:	
Attorney Docket No. 368586-990201	:	

This is a decision on the Request to Withdraw as attorney or agent of record under 37 C.F.R. § 1.36(b), filed July 29, 2010.

The request is **NOT APPROVED.**

The Office will only accept correspondence address changes to the most current address information provided for the assignee of the entire interest who properly became of record under 37 CFR 3.71, or, if no assignee of the entire interest has properly been made of record, the most current address information provided for the first named inventor. The request to change the correspondence of record is not acceptable as the requested correspondence address is not that of the first named inventor, but rather the second named inventor.

All future communications from the Office will continue to be directed to the above-listed address until otherwise notified by applicant.

Currently, there is no outstanding Office action that requires a reply.

Telephone inquires concerning this decision should be directed to the undersigned at (571) 272-7751. All other inquires concerning either the examination or status of the application should be directed to the Technology Center.

Joan Olszewski

Joan Olszewski
Petitions Examiner
Office of Petitions

UNITED STATES PATENT AND TRADEMARK OFFICE

Commissioner for Patents
United States Patent and Trademark Office
P.O. Box 1450
Alexandria, VA 22313-1450
www.uspto.gov

DLA PIPER LLP (US)
2000 UNIVERSITY AVENUE
EAST PALO ALTO CA 94303-2248

MAILED

DEC 09 2010

OFFICE OF PETITIONS

In re Application of	:	
Faria et al.	:	
Application No. 12/542,611	:	DECISION ON PETITION
Filed: August 17, 2009		TO WITHDRAW FROM RECORD
Attorney Docket No. 368586-990201	:	
	:	

This is a decision on the renewed Request to Withdraw as attorney or agent of record under 37 C.F.R. § 1.36(b), filed November 24, 2010.

The request is **APPROVED**.

A grantable request to withdraw as attorney/agent of record must be signed by every attorney/agent seeking to withdraw or contain a clear indication that one attorney is signing on behalf of another/others. The Office will require the practitioner(s) to certify that he, she or they have: (1) given reasonable notice to the client, prior to the expiration of the reply period, which the practitioner(s) intends to withdraw from employment; (2) delivered to the client or a duly authorized representative of the client all papers and property (including funds) to which the client is entitled; and (3) notified the client of any replies that may be due and the time frame within which the client must respond, pursuant to 37 CFR 10.40 (c).

The request was signed by Alan A. Limbach on behalf of all attorneys of record who are associated with Customer Number 26379.

All attorneys/agents associated with the Customer Number 26379 have been withdrawn. Applicants are reminded that there is no attorney of record at this time.

All future correspondence will be directed to the first named inventor at the address indicated below.

Currently, there is no outstanding Office action that requires a reply.

Telephone inquiries concerning this decision should be directed to the undersigned at (571) 272-7751. All other inquires concerning either the examination or status of the application should be directed to the Technology Center.

Joan Olszewski
Petitions Examiner
Office of Petitions

cc: Arlo Mukai Faria
232B Lexington Street
San Francisco, CA 94110

UNITED STATES PATENT AND TRADEMARK OFFICE

Commissioner for Patents
United States Patent and Trademark Office
P.O. Box 1450
Alexandria, VA 22313-1450
www.uspto.gov

COCHRAN FREUND & YOUNG LLC
2026 CARIBOU DR.
SUITE 201
FORT COLLINS, CO80525

MAILED
SEP 22 2010
OFFICE OF PETITIONS

Applicant: Rocca, et al.
Appl. No.: 12/542,663
Filing Date: August 17, 2009
Title: High Repetition-Rate, all Laser Diode-Pumped Extreme Ultraviolet/Soft X-Ray Laser and Pump System
Attorney Docket No.: XUV.03USU1 (09-011)
Pub. No.: US 2010/0040105 A1
Pub. Date: February 18, 2010

This is a decision on the request for a corrected patent application publication under 37 CFR 1.221(b), received on February 24, 2010, for the above-identified application

The request is DISMISSED.

Applicant requests that the application be republished because the patent application publication contains a material error on the front page of the application wherein the assignee's name is incorrect.

37 CFR 1.221 (b) is applicable "only when the Office makes a material mistake which is apparent from Office records.... Any request for a corrected publication or revised patent application publication other than provided as provided in paragraph (a) of this section must be filed **within two months** from the date of the patent application publication. **This period is not extendable.**" A material mistake must affect the public's ability to appreciate the technical disclosure of the patent application publication, to determine the scope of the patent application publication, or to determine the scope of the provisional rights that an applicant may seek to enforce upon issuance of a patent. [1]

The error on the front page of the published patent application wherein the assignee's name "Colorado State University Research Foundation, Fort Collins, CO (US)" was printed as "XUV, Inc., Fort Collins, CO (US)" is not a material Office error under 37 CFR 1.221(b). The assignee name is printed as it appears in the ADS filed with the application. The misprinting of the assignee's name does not affect the understanding of the application. The error in assignment information is not a material mistake because it does not affect the public's ability to appreciate the technical disclosure of the patent application publication, to determine the scope of the patent application publication or to determine the scope of the provisional rights that an applicant may

[1] Changes to Implement Eighteen-Month Publication of Patent Applications, 65 FR 57023, 57038 (Sept. 20, 2000), 1239, Off. Gaz. Pat. Office Notices 63, 75 (Oct. 10, 2000) (final rule).

seek to enforce upon issuance of a patent. See MPEP 1130. Applicant should not file requests for corrected publication when a publication includes errors in the assignee's name or assignment information. See MPEP 1130.

The "supplemental ADS" filed on November 13, 2009, is not in accordance with 37 CFR 1.76(c) because it did not identify the changes to the information that is being changed.

On September 9, 2009 and November 10, 2009, a Filing Receipts were mailed by the Office, which listed the assignee's name as XUV, Inc. To avoid this type of problem in the future, applicant's representative should correct the error and make a request for a corrected filing receipt prior to export of the application to the publisher and publication of the application.

Applicant is reminded of his duty to conduct a reasonable inquiry before filing a paper before the Office. See MPEP 410.

Applicants' request for a corrected patent application publication on February 24, 2010, may constitute a "failure to engage in reasonable efforts to conclude processing or examination of the application." See 1.704(c). This determination will be made on or after a mailing of a Notice of Allowance.

The applicant is advised that a "request for republication of an application previously published" may be filed under 37 CFR 1.221(a). Such a request for republication "must include a copy of the application compliance with the Office's electronic filing system requirements and be accompanied by the publication fee set forth in § 1.18(d) and the processing fee set forth in § 1.17(i)." If the request for republication does not comply with the electronic filing system requirements, the republication will not take place and the publication fee set forth in § 1.18(d) will be refunded. The processing fee will be retained.

A Quick Start Guide for filing a request for a Pre-Grant Publication, such as a request for republication, may be found on the link below:

http://www.uspto.gov/patents/process/file/efs/guidance/index.jsp

http://www.uspto.gov/ebc/portal/efs/pgpub_quickstart.pdf

Any request for republication under 37 CFR 1.221(a), must be submitted via the EFS system, as a "Pre-Grant Publication".

Inquiries relating to this matter may be directed to Mark Polutta at (571) 272-7709.

Mark Polutta
Senior Legal Advisor
Office of Patent Legal Administration
Office of the Deputy Commissioner
for Patent Examination Policy

UNITED STATES PATENT AND TRADEMARK OFFICE

Commissioner for Patents
United States Patent and Trademark Office
P.O. Box 1450
Alexandria, VA 22313-1450
www.uspto.gov

MAILED
MAR 26 2012
OFFICE OF PETITIONS

KEVIN D MCCARTHY
ROACH BROWN MCCARTHY & GRUBER PC
424 MAIN STREET
1920 LIBERTY BUILDING
BUFFALO NY 14202

In re Application of	:	
Nitzan Bertele	:	
Application No. 12/542,753	:	ON PETITION
Filed: August 18, 2009	:	
Attorney Docket No. 0-09-151	:	

This is a decision on the petition to revive under 37 CFR 1.137(b), filed March 20, 2012.

The petition under 37 CFR 1.137(b) is **GRANTED**.

The above application became abandoned for failure to timely file a reply to the non-final Office action mailed April 5, 2011. This Office set a shortened statutory period for reply of three months. No reply having been received, the application became abandoned on July 6, 2011. The Office mailed a Notice of Abandonment on October 17, 2011.

With the instant petition, petitioner has made the proper statement of unintentional delay, paid the petition fee, and submitted the required reply in the form of an Amendment.

The application is being forwarded to Group Art Unit 3636 for consideration of the Amendment, filed March 20, 2012.

Telephone inquiries related to this decision should be directed to the undersigned at (571)272-3207.

Cliff Congo
Petitions Attorney
Office of Petitions

UNITED STATES PATENT AND TRADEMARK OFFICE

Commissioner for Patents
United States Patent and Trademark Office
P.O. Box 1450
Alexandria, VA 22313-1450
www.uspto.gov

FOLEY HOAG, LLP
Patent Group
World Trade Center West
155 Seaport Blvd
Boston, MA 02110

MAILED
JAN 18 2011
OFFICE OF PETITIONS

In re Application of	:	
Vincent Ling, et al.	:	
Application No. 12/542,901	:	DECISION ON PETITION
Filed: August 18, 2009	:	TO WITHDRAW
Attorney Docket No. WYS-010.04	:	FROM RECORD
	:	

This is a decision on the Request to Withdraw as attorney or agent of record under 37 C.F.R. § 1.36(b), filed December 15, 2010.

The request is **APPROVED**.

A grantable request to withdraw as attorney/agent of record must be signed by every attorney/agent seeking to withdraw or contain a clear indication that one attorney is signing on behalf of another/others. A request to withdraw will not be approved unless at least 30 (thirty) days would remain between the date of approval and the later of the expiration date of a time to file a response or the expiration date of the maximum time period which can be extended under 37 C.F.R. § 1.136(a).

The request was signed by DeAnn F. Smith on behalf of all attorneys of record. All attorneys/agents have been withdrawn. Applicant is reminded that there is no attorney of record at this time.

All future communications from the Office will be directed to the assignee of the entire interest at the first copied address below until otherwise properly notified by the applicant.

There is an outstanding Office action mailed August 19, 2010 that requires a reply from the applicant.

Telephone inquiries concerning this decision should be directed to Terri Johnson at 571-272-2991.

/Terri Johnson/
Terri Johnson
Petitions Examiner
Office of Petitions

cc: **Genetics Institute, LLC**
c/o Pfizer Inc.
Patent Department
Five Giralda Farms
Madison, NJ 07940

UNITED STATES PATENT AND TRADEMARK OFFICE

UNITED STATES DEPARTMENT OF COMMERCE
United States Patent and Trademark Office
Address: COMMISSIONER FOR PATENTS
P.O. Box 1450
Alexandria, Virginia 22313-1450
www.uspto.gov

APPLICATION NUMBER	FILING OR 371(C) DATE	FIRST NAMED APPLICANT	ATTY. DOCKET NO./TITLE
12/542,901	08/18/2009	Vincent Ling	WYS-010.04

CONFIRMATION NO. 6310

POWER OF ATTORNEY NOTICE

25181
FOLEY HOAG, LLP
PATENT GROUP, WORLD TRADE CENTER WEST
155 SEAPORT BLVD
BOSTON, MA 02110

OC000000045461125

Date Mailed: 01/13/2011

NOTICE REGARDING CHANGE OF POWER OF ATTORNEY

This is in response to the Power of Attorney filed 12/15/2010.

- The withdrawal as attorney in this application has been accepted. Future correspondence will be mailed to the new address of record. 37 CFR 1.33.

/tsjohnson/

Office of Data Management, Application Assistance Unit (571) 272-4000, or (571) 272-4200, or 1-888-786-0101

UNITED STATES PATENT AND TRADEMARK OFFICE

UNITED STATES DEPARTMENT OF COMMERCE
United States Patent and Trademark Office
Address: COMMISSIONER FOR PATENTS
P.O. Box 1450
Alexandria, Virginia 22313-1450
www.uspto.gov

APPLICATION NO.	FILING DATE	FIRST NAMED INVENTOR	ATTORNEY DOCKET NO.	CONFIRMATION NO.
12/542,913	08/18/2009	Ohad Paz	49290	6330

67801 7590 08/18/2011
MARTIN D. MOYNIHAN d/b/a PRTSI, INC.
P.O. BOX 16446
ARLINGTON, VA 22215

EXAMINER
LIU, JONATHAN

ART UNIT	PAPER NUMBER
3673	

MAIL DATE	DELIVERY MODE
08/18/2011	PAPER

Please find below and/or attached an Office communication concerning this application or proceeding.

The time period for reply, if any, is set in the attached communication.

UNITED STATES PATENT AND TRADEMARK OFFICE

Commissioner for Patents
United States Patent and Trademark Office
P.O. Box 1450
Alexandria, VA 22313-1450
www.uspto.gov

AUG 1 8 2011

Jason H. Rosenblum
Martin D. Moynihan d/b/a Prtsi, Inc.
P.O. Box 16446
Arlington, VA 22215

In re Application of	:	
Ohad PAZ et al.	:	
Application No.: 12/542,913	:	*In response to*
Filed: August 18, 2009	:	Petition filed under
For: Multi Position Support Apparatus with a Movable Frame	:	37 CFR 1.181

This is in response to the petition filed July 5, 2011 under 37 CFR 1.181 to invoke supervisory authority regarding the contemporaneously filed after final amendment of July 5, 2011.

The petition is **DISMISSED as being moot**.

Petitioner requests review of an action by the Primary Examiner which has not occurred (i.e. the petition is conditional upon an Advisory action issued by the Primary Examiner in response to contemporaneously filed after final amendment). Accordingly, the petition is not ripe for decision at this point in time and consequently, is considered to be moot.

Furthermore, it is noted that the petition refers to the amendment as a "a copy of which is filed with this Petition". However, no copy of the July 5, 2011 amendment was filed with the petition. The electronic file includes an amendment dated July 5, 2011; however, a "copy" is not contained in the electronic file. Additionally, petitioner indicates "the facts involved, the points to be reviewed, and the action requested, are all clearly set forth in the enclosed **attachment**." No attachment was included with the petition. The petition consists of a single paper entitled "Petition to the Director under 37 CFR 1.181." As a petition must be evaluated on its own merits, any renewed petition should include a copy of the July 5, 2011 amendment and the "attachment" containing "the facts involved, the points to be reviewed, and the action requested", as referenced in the instant petition.

Inquires related to this decision may be directed to Peter M. Cuomo at (571) 272-6856.

David Talbott, Director
Technology Center 3600
(571) 272-5150

DT/pmc: 8/6/11
TL

UNITED STATES PATENT AND TRADEMARK OFFICE

UNITED STATES DEPARTMENT OF COMMERCE
United States Patent and Trademark Office
Address: COMMISSIONER FOR PATENTS
P.O. Box 1450
Alexandria, Virginia 22313-1450
www.uspto.gov

APPLICATION NO.	FILING DATE	FIRST NAMED INVENTOR	ATTORNEY DOCKET NO.	CONFIRMATION NO.
11/715,410	03/08/2007	Ohad Paz	48906	5382

67801 7590 08/18/2011
MARTIN D. MOYNIHAN d/b/a PRTSI, INC.
P.O. BOX 16446
ARLINGTON, VA 22215

EXAMINER
LIU, JONATHAN

ART UNIT	PAPER NUMBER
3673	

MAIL DATE	DELIVERY MODE
08/18/2011	PAPER

Please find below and/or attached an Office communication concerning this application or proceeding.

The time period for reply, if any, is set in the attached communication.

UNITED STATES PATENT AND TRADEMARK OFFICE

Commissioner for Patents
United States Patent and Trademark Office
P.O. Box 1450
Alexandria, VA 22313-1450
www.uspto.gov

INTERNATIONAL BUSINESS MACHINES CORPORATION
INTELLECTUAL PROPERTY LAW
650 HARRY ROAD
SAN JOSE CA 95120

MAR 22 2012

In re Application of	:	
HAN, WOOK-SHIN et al.	:	
Application No.: 12/542,937	:	DECISION ON
Filing or 371(c) Date: August 18, 2009	:	PETITION
Attorney Docket Number: ARC920090008US1	:	

This is a decision on the Petition to Withdraw Holding of Abandonment received in the United States Patent and Trademark Office (USPTO) on March 20, 2012.

This petition is **GRANTED**.

The application was held abandoned for failure to timely submit the Issue Fee and Publication fee as required by the Notice of Allowance, mailed September 20, 2011 which set forth a three (3) month statutory period of reply. The Notice of Abandonment was mailed on January 9, 2012.

Petitioner states that the issue fee transmittal and payment were timely filed via the Hand Delivery to USPTO on December 19, 2011 thereon on the date stamped thereon by the USPTO.

In view of the foregoing, the holding of abandonment for failure to timely pay the issue fee is hereby withdrawn and the application restored to pending status.

Telephone inquiries concerning this matter should be directed to the undersigned at (703) 756-1547.

Kay D. Pinkney
Application Assistance Unit
Office of Data Management

UNITED STATES PATENT AND TRADEMARK OFFICE

UNITED STATES DEPARTMENT OF COMMERCE
United States Patent and Trademark Office
Address: COMMISSIONER FOR PATENTS
P.O. Box 1450
Alexandria, Virginia 22313-1450
www.uspto.gov

APPLICATION NO.	FILING DATE	FIRST NAMED INVENTOR	ATTORNEY DOCKET NO.	CONFIRMATION NO.
12/542,983	08/18/2009	Hun Joo Lee	KCL0070US	6472

23413 7590 03/02/2012
CANTOR COLBURN LLP
20 Church Street
22nd Floor
Hartford, CT 06103

EXAMINER
BUDD, MARK OSBORNE

ART UNIT	PAPER NUMBER
2837	

NOTIFICATION DATE	DELIVERY MODE
03/02/2012	ELECTRONIC

Please find below and/or attached an Office communication concerning this application or proceeding.

The time period for reply, if any, is set in the attached communication.

Notice of the Office communication was sent electronically on above-indicated "Notification Date" to the following e-mail address(es):

usptopatentmail@cantorcolburn.com

UNITED STATES PATENT AND TRADEMARK OFFICE

Commissioner for Patents
United States Patent and Trademark Office
P.O. Box 1450
Alexandria, VA 22313-1450
www.uspto.gov

Cantor Colburn LLP
20 Church Street
22nd Place
Hartford, CT 06103

MAR 2 2012

In re Application of:	:	
Hun Joo Lee et al.	:	*SUA SPONTE*
Serial No.: 12/542,983	:	DECISION WITHDRAWING HOLDING OF
Filed: August 18, 2009	:	ABANDONMENT
Attorney Docket No.: KLC0070US	:	

This is a decision, *sua sponte*, withdrawing the holding of abandonment of the above-identified application.

The applicant was inadvertently abandoned by the examiner. A review of the written record indicates that a timely Request for Continued Examination including an extension of time and amendment to the claims was filed September 19, 2011. Therefore, the application was not abandoned in fact.

For the above stated reason, the Notice of Abandonment is hereby vacated and the holding of abandonment withdrawn. The application is restored to pending status.

The response filed September 19, 2011 will be entered and forwarded to the examiner for appropriate action. Any inconvenience to the applicant is regretted.

Inquiries related to this decision should be directed to Walter Benson, Supervisory Patent Examiner, at (571) 272-2227.

Wynn Coggins, Director
Technology Center 2800
Semiconductors, Electrical and Optical
Systems and Components

PATENT
Customer No. 93,377
Attorney Docket No. 11298.0157-00000

IN THE UNITED STATES PATENT AND TRADEMARK OFFICE

In re Application of:	)	
	)	
Yan Xin, et al.	)	Group Art Unit: 2611
	)	
Application No.: 12/542,995	)	Examiner: Ghayour, Mohammad H.
	)	
Filed: August 18, 2009	)	Confirmation No.: 6498
	)	
For: SYSTEMS AND METHODS FOR TRAINING SEQUENCE SELECTION, TRANSMISSION AND RECEPTION	)	

Mail Stop: Petition
Commissioner for Patents
P.O. Box 1450
Alexandria, VA 22313-1450

Sir:

REQUEST TO PARTICIPATE IN THE PROJECT EXCHANGE/PATENT APPLICATION BACKLOG REDUCTION STIMULUS PLAN

Applicants hereby request participation in the Project Exchange/Patent Application Backlog Reduction Stimulus Plan (hereinafter "the Plan") and petition to make the above-identified application special under the Plan and based on the requirements of 37 CFR 1.102.

Applicants submit that this application, No. 12/542,995, is a nonprovisional application that has a filing date earlier than October 1, 2009. Additionally, Applicants note that this application, No. 12/542,995, and copending nonprovisional application No. 12/392,741, which also has an actual filing date earlier than October 1, 2009, and is

complete under 37 CFR 1.53, have the same owner, Research in Motion Limited, as of October 1, 2009.

On behalf of Research in Motion Limited an express abandonment under 37 CFR 1.138(a) has been filed in copending application 12/392,741, in full compliance with Part (4) of the Plan. As required by 37 CFR 1.102, a copy of the express abandonment is attached.

Applicants further submit that Applicants have not filed a petition in more than fourteen other applications requesting special status under the Plan. Applicants also agree to make an election without traverse in a telephonic interview if the Office determines that the claims of this application are directed to two or more independent and distinct inventions.

Applicants note that the fee associated with this petition is waived.

Please grant any extensions of time required to enter this response and charge any required fees to our deposit account 06-0916.

Respectfully submitted,

Dated: August 20, 2010

By:_____
Jeffrey A. Berkowitz
Reg. No. 36,743

PATENT
Customer No. 93,377
Attorney Docket No. 11298.0169-00000

IN THE UNITED STATES PATENT AND TRADEMARK OFFICE

In re Application of:	)	
	)	
Jason HAMILTON	)	Group Art Unit: 3729
	)	
Application No.: 12/392,741	)	Examiner: CAZAN, Livius
	)	
Filed: February 25, 2009	)	Confirmation No.: 9418
	)	
For: CABLE CONNECTOR GRASPING APPARATUS	)	

Mail Stop: Express Abandonment
Commissioner for Patents
P.O. Box 1450
Alexandria, VA 22313-1450

Sir:

EXPRESS ABANDONMENT

In accordance with 37 C.F.R. § 1.138(a) and subject acceptance of copending nonprovisional application No. 12/542,995, filed August 18, 2009, to participate in the Project Exchange/Patent Application Backlog Reduction Stimulus Plan (hereinafter "the Plan"), Research in Motion Limited, the owner by assignment of the present application No. 12/392,741, expressly abandons the present application No. 12/392,741.

In accordance with the requirements of Part (4) of the Plan, Applicant represents as follows:

a) no application that claims the benefit of this application, under any provision of title 35 of the United States Code, has been or will be filed by the Applicant;

b) no request will be made by the Applicant for a refund of any fees paid in this application; and

c) no new application that claims the "same invention" (as used in the context of statutory double patenting under 35 U.S.C. § 101) claimed in this application has been or will be filed by the Applicant.

Please charge our deposit account 06-0916 for any required fees not accounted for herewith.

Respectfully submitted,

Dated: August 20, 2010

By:_____
Jeffrey A. Berkowitz
Reg. No. 36,743

Electronic Acknowledgement Receipt

EFS ID:	8255341
Application Number:	12392741
International Application Number:	
Confirmation Number:	9418
Title of Invention:	CABLE CONNECTOR GRASPING APPARATUS
First Named Inventor/Applicant Name:	Jason HAMILTON
Customer Number:	91409
Filer:	Bryan C. Diner/Janet Weems
Filer Authorized By:	Bryan C. Diner
Attorney Docket Number:	263541.00091
Receipt Date:	20-AUG-2010
Filing Date:	25-FEB-2009
Time Stamp:	11:28:05
Application Type:	Utility under 35 USC 111(a)

Payment information:

Submitted with Payment	no

File Listing:

Document Number	Document Description	File Name	File Size(Bytes)/ Message Digest	Multi Part /.zip	Pages (if appl.)
1	Letter Express Abandonment of the application	Express_Abandonment.pdf	84995 d9228ea223eb600adfeedb9f8192e3d39a7b95cd	no	2

Warnings:

Information:

Total Files Size (in bytes):	84995

This Acknowledgement Receipt evidences receipt on the noted date by the USPTO of the indicated documents, characterized by the applicant, and including page counts, where applicable. It serves as evidence of receipt similar to a Post Card, as described in MPEP 503.

New Applications Under 35 U.S.C. 111
If a new application is being filed and the application includes the necessary components for a filing date (see 37 CFR 1.53(b)-(d) and MPEP 506), a Filing Receipt (37 CFR 1.54) will be issued in due course and the date shown on this Acknowledgement Receipt will establish the filing date of the application.

National Stage of an International Application under 35 U.S.C. 371
If a timely submission to enter the national stage of an international application is compliant with the conditions of 35 U.S.C. 371 and other applicable requirements a Form PCT/DO/EO/903 indicating acceptance of the application as a national stage submission under 35 U.S.C. 371 will be issued in addition to the Filing Receipt, in due course.

New International Application Filed with the USPTO as a Receiving Office
If a new international application is being filed and the international application includes the necessary components for an international filing date (see PCT Article 11 and MPEP 1810), a Notification of the International Application Number and of the International Filing Date (Form PCT/RO/105) will be issued in due course, subject to prescriptions concerning national security, and the date shown on this Acknowledgement Receipt will establish the international filing date of the application.

UNITED STATES PATENT AND TRADEMARK OFFICE

Commissioner for Patents
United States Patent and Trademark Office
P.O. Box 1450
Alexandria, VA 22313-1450
www.uspto.gov

RIM/FINNEGAN
901 New York Avenue NW
Washington DC 20001

MAILED

SEP 17 2010

OFFICE OF PETITIONS

In re Application of
XIN et al.
Application No. 12/542,995
Filed: August 18, 2009
Attorney Docket No. **11298.0157-00000**

DECISION ON PETITION
TO MAKE SPECIAL
37 CFR 1.102

This is a decision on the petition under 37 CFR 1.102, filed August 20, 2010, to make the above-identified application special under the Patent Application Backlog Reduction Stimulus Plan which is a pilot program set forth at 74 Federal Register Notice 62285 (November 27, 2009) and 75 Federal register Notice 36063 (June 24, 2010).

The petition is **GRANTED**.

A grantable petition to make an application special under 37 CFR 1.102 and the pilot program as set forth in 74 FR 62285 and 75 FR 36063 must be directed to a nonprovisional application filed prior to October 1, 2009.

The USPTO will accord special status for examination under Patent Application Backlog Reduction Stimulus Plan under the following conditions:

(1) The application for which special status is sought is a nonprovisional application that has an actual filing date earlier than October 1, 2009;

(2) The applicant has another copending nonprovisional application that has an actual filing date earlier than October 1, 2009, and is complete under 37 CFR 1.53;

(3) The application for which special status is sought and the other copending nonprovisional application either are owned by the same party as of October 1, 2009, or name at least one inventor in common;

(4) The applicant files a letter of express abandonment under 37 CFR 1.138(a) in the copending nonprovisional application before it has been taken up for examination and

a) include a statement that the applicant has not and will not file a new application that claims the same invention claimed in the expressly abandoned application;

b) includes with the letter of express abandonment a statement that the applicant has not and will not file an application that claims the benefit of the

expressly abandoned application under any provision of title 35, United States Code, and

c) the applicant agrees not to request a refund of any fees paid in the expressly abandoned application; and

(5) The applicant files a petition under 37 CFR 1.102 in the application for which special status is sought that

a) includes a specific identification of the relationship between the applications that qualifies the application for special status;

b) identifies, by application number if available, the application that is being expressly abandoned;

c) provides a statement certifying that applicant has not filed petitions in more than fourteen (14) other applications requesting special status under this program; and

d) provides a statement that applicant agrees to make an election without traverse in a telephonic interview if the Office determines that the claims of the application to be made special are directed to two or more independent and distinct inventions.

The requirement for a fee for consideration of the petition to make special for applications pertaining to Patent Application Backlog Reduction Stimulus Plan has been waived.

The instant petition complies with the conditions required under Patent Application Backlog Reduction Stimulus Plan. Accordingly, the above-identified application has been accorded "special" status.

Telephone inquires concerning this decision should be directed to Brian W. Brown at 571-272-5338.

All other inquires concerning either the examination or status of the application should be directed to the Technology Center.

The application is being forwarded to the Office of Patent Application Processing for further processing commensurate with this decision.

Brian W. Brown
Petitions Examiner
Office of Petitions

UNITED STATES PATENT AND TRADEMARK OFFICE

Commissioner for Patents
United States Patent and Trademark Office
P.O. Box 1450
Alexandria, VA 22313-1450
www.uspto.gov

Patent No. : 7874913 B2
Application No.: 12/543012
Inventor(s) : Webb et al.
Issued : 01/25/2011
Attorney Docket No.: 3718611.06027

Re: Request for Certificate of Correction

Consideration has been given your request for the issuance of a certificate of correction for the above-identified patent under the provisions of Rule(s) 1.323.

The changes requested to Claim 9 will not be made. Examiner disagreed with adding "a display device" to claim 9 due to the addition of new matter to the claim.

In view of the foregoing, your request, in this matter, is hereby denied.

Tasneem Siddiqui
For Mary Diggs (Supervisor)
Decisions & Certificates of Correction Branch
(703) 756-1593 or (703) 756-1814
Date: 03/22/2011

Address: Adam H. Masia
K&L Gates, LLP
P.O. Box 1135
Chicago, Illinois 60690-1135

ts/MD

SPE RESPONSE FOR CERTIFICATE OF CORRECTION

Paper No.: _____

DATE : 03/16/11

TO SPE OF : ART UNIT: 3718 Attn: VO PETER DUNG (PETER) B (SPE)

SUBJECT : Request for Certificate of Correction for Appl. No.: 12/543012 Patent No.: 7874913

C of C Mailroom date: 03/02/11

Please respond to this request for a certificate of correction within 7 days.

FOR IFW FILES:

Please review the requested changes/corrections as shown in the **COCIN** document(s) in the IFW application image. No new matter should be introduced, nor should the scope or meaning of the claims be changed.

Please complete the response (see below) and forward the completed response to scanning using document code **COCX**.

FOR PAPER FILES:

Please review the requested changes/corrections as shown in the attached certificate of correction. Please complete this form (see below) and forward it with the file to:

Certificates of Correction Branch (CofC)
Randolph Square – 9D10-A
Palm Location 7580

Tasneem Siddiqui
Certificates of Correction Branch
703-756-1593 or 703-756-1814

Thank You For Your Assistance

The request for issuing the above-identified correction(s) is hereby:
Note your decision on the appropriate box.

- ☐ **Approved** — All changes apply.
- ☐ **Approved in Part** — Specify below which changes **do not** apply.
- ☐ **Denied** — State the reasons for denial below.

Comments: _____

_____

_____

_____ SPE _____ Art Unit

Siddiqui, Tasneem

From: Hall, Arthur O.
Sent: Monday, March 21, 2011 2:54 PM
To: Siddiqui, Tasneem; Vo, Peter
Cc: Hall, Arthur O.
Subject: RE: SPE's Response 3 01-13-2006 for IFW docs (2) (3).doc

Dear LIE,

I had a phone conversation with the applicants today, 3/21/2011, regarding the changes to be made in the certificate of correction, from which agreement was concluded that the changes requested to claim 9 will not be made.

Examiner disagreed with adding "a display device" to claim 9 due to the addition of new matter to the claim. Applicants agreed. Applicants will subsequently submit a new certificate of correction to correct the grammatical problem in claim 9 without adding new matter.

Thus, please do NOT make the changes to claim 9 requested by the applicant on the SB/44 form.

Thanks in advance for your assistance in this matter.

Best Regards,
-Arthur

Arthur O. Hall
Patent Examiner - Art Unit 3718
United States Patent and Trademark Office
Randolph 6/A-15
(571) 270-1814
arthur.hall@uspto.gov

From: Siddiqui, Tasneem
Sent: Wednesday, March 16, 2011 8:46 AM
To: Vo, Peter
Cc: Hall, Arthur O.
Subject: SPE's Response 3 01-13-2006 for IFW docs (2) (3).doc

Good morning,

Attached please find the FORM PTOL 306 for SPE's approval and signature.

In the amended Claim 9 some changes are requested on the SB/44 Form.
Should these changes be made or not.
Please respond to this email so that I will be able to issue a certificate of correction.

Thank you
Tasneem Siddiqui - LIE
Certificate of Correction Branch

UNITED STATES PATENT AND TRADEMARK OFFICE

Commissioner for Patents
United States Patent and Trademark Office
P.O. Box 1450
Alexandria, VA 22313-1450
www.uspto.gov

KILPATRICK TOWNSEND & STOCKTON LLP
TWO EMBARCADERO CENTER
EIGHTH FLOOR
SAN FRANCISCO CA 94111-3834

MAILED

MAY 3 1 2011

OFFICE OF PETITIONS

In re Application of	:	
Peter Lu et al.	:	
Application No. 12/543,079	:	DECISION ON PETITION
Filed: August 18, 2009	:	TO WITHDRAW
Attorney Docket No. 020054-005710US	:	FROM RECORD
	:	

This is a decision on the Request to Withdraw as attorney or agent under 37 C.F.R. § 1.36(b) filed May 2, 2011.

The request is **NOT APPROVED**.

The Office will no longer approve requests from practitioners to withdraw from applications where the requesting practitioner is acting, or has acted, in a representative capacity pursuant to 37 CFR 1.34. In these situations, the practitioner is responsible for the correspondence the practitioner files in the application while acting in a representative capacity. As such, there is no need for the practitioner to obtain the Office's permission to withdraw from representation. However, practitioners acting in a representative capacity, like practitioners who have a power of attorney in the application, remain responsible for noncompliance with 37 CFR 1.56, as well as 37 CFR 10.18, with respect to documents they file.

A review of the file record indicates that Kenneth E. Jenkins and all attorneys/agents associated with customer number 20350 do not have power of attorney, but has acted in a representative capacity in this patent application. See 37 C.F.R. § 10.40. Accordingly, the request to withdraw under 37 C.F.R. § 1.36(b) is not applicable.

The request to change the correspondence address can not be accepted at this time, because the address should be that of the: (1) the first named inventor; or (2) an assignee of the entire interest under 37 C.F.R 3.71. If an assignee has intervened in this application then a Statement under 37 CFR 3.73(b), or a copy of the actual assignment must be submitted with a renewed request.

Telephone inquires concerning this decision should be directed to the undersigned at 571-272-4618

/Kimberly Inabinet/

Kimberly Inabinet
Petitions Examiner
Office of Petitions

UNITED STATES PATENT AND TRADEMARK OFFICE

UNITED STATES DEPARTMENT OF COMMERCE
United States Patent and Trademark Office
Address: COMMISSIONER FOR PATENTS
P.O. Box 1450
Alexandria, Virginia 22313-1450
www.uspto.gov

APPLICATION NO.	FILING DATE	FIRST NAMED INVENTOR	ATTORNEY DOCKET NO.	CONFIRMATION NO.
12/543,173	08/18/2009	Dikran Babikian	62928/B603	6810

23363 7590 03/02/2012
CHRISTIE, PARKER & HALE, LLP
PO BOX 29001
Glendale, CA 91209-9001

EXAMINER
POLITO, NICHOLAS F

ART UNIT	PAPER NUMBER
3673	

MAIL DATE	DELIVERY MODE
03/02/2012	PAPER

Please find below and/or attached an Office communication concerning this application or proceeding.

The time period for reply, if any, is set in the attached communication.

UNITED STATES PATENT AND TRADEMARK OFFICE

Commissioner for Patents
United States Patent and Trademark Office
P.O. Box 1450
Alexandria, VA 22313-1450
www.uspto.gov

CHRISTIE, PARKER & HALE, LLP
PO BOX 29001
Glendale CA 91209-9001

Applicant: Babikian et al.
Appl. No.: 12/543,173
Filing Date: August 18, 2009
Title: BABY CHANGING STATION
Attorney Docket No.: 62928/B603
Pub. No.: US 2010/0037396 A1
Pub. Date: February 18, 2010

This is a decision on the request for republication of patent application publication under 37 CFR 1.221(a), filed on February 22, 2012, for the above-identified application.

The request under 37 CFR 1.221(a) is DISMISSED.

37 CFR 1.221(a) requires "a copy of the application in compliance with the Office electronic filing system requirements and be accompanied by the publication fee set forth in § 1.18(d) and the processing fee set forth in § 1.17(i)". If the request for republication does not comply with the electronic filing system requirements, the republication will not take place and the publication fee set forth in § 1.18(d) will be refunded. The processing fee will be retained.

The applicant did not supply a copy of the application in compliance with the Office electronic filing system, as required by 37 CFR 1.221(a) because **the applicant submitted the papers as a "Document for an existing application", which are entered into the application file, and not as a "Pre-Grant Publication" submission**. The request for republication does not comply with the electronic filing system requirements, thus republication will not take place.

Any request for republication under 37 CFR 1.221(a), must be submitted via the EFS system, as a Pre-Grant publication submission and must include a copy of the application in compliance with the Office electronic filing system requirements. The applicant is directed to the following website for additional instructions on how to submit a Pre-Grant Publication submission via the electronic filing system:

http://www.uspto.gov/ebc/portal/efs/pgpub_quickstart.pdf

Any questions or requests for reconsideration of the decision should be addressed as follows:

By mail to: Mail Stop PGPUB
Commissioner for Patents
P.O. Box 1450
Alexandria, Va. 22313-1450

By facsimile: 571-273-8300

Telephone inquiries regarding this correspondence should be directed to The Office of Data Management at 571-272-4200.

Tammy J. Koontz
Office of Data Management
United States Patent & Trademark Office

UNITED STATES PATENT AND TRADEMARK OFFICE

Commissioner for Patents
United States Patent and Trademark Office
P.O. Box 1450
Alexandria, VA 22313-1450
www.uspto.gov

TIMOTHY JOHN VAN TUINEN, LLC
P.O.BOX 351043
TOLEDO, OH 43635

MAILED

NOV 05 2010

OFFICE OF PETITIONS

In re Application of	:	DECISION ON PETITION
Sammy Lee Johnson II	:	TO WITHDRAW
Application No. 12/543,195	:	FROM RECORD
Filed: August 18, 2009	:	
Attorney Docket No. Johnson, Sammy Lee	:	

This is a decision on the Request to Withdraw as attorney or agent of record under 37 C.F.R. § 1.36(b), filed October 15, 2010.

The request is **APPROVED**.

A grantable request to withdraw as attorney/agent of record must be signed by every attorney/agent seeking to withdraw or contain a clear indication that one attorney is signing on behalf of another/others. The Office will require the practitioner(s) to certify that he, she or they have: (1) given reasonable notice to the client, prior to the expiration of the reply period, which the practitioner(s) intends to withdraw from employment; (2) delivered to the client or a duly authorized representative of the client all papers and property (including funds) to which the client is entitled; and (3) notified the client of any replies that may be due and the time frame within which the client must respond, pursuant to 37 CFR 10.40 (c).

The request was signed by Timothy Van Tuinen, on behalf of the practitioners of record associated with Customer No 90084.

Customer No 90084 has been withdrawn as from record. Applicant is reminded that there is no attorney of record at this time.

The correspondence address of record has been changed and the new correspondence address is the address indicated below.

There are no outstanding Office actions that require a reply from the applicant.

Telephone inquires concerning this decision should be directed to the undersigned at (571) 272-6059. All other inquires concerning either the examination or status of the application should be directed to the Technology Center.

A. Kelley

Alicia Kelley
Petitions Examiner
Office of Petitions

cc: SAMMY LEE JOHNSON
1110 COURT DRIVE APT. D
DULUTH, GA 30096

UNITED STATES PATENT AND TRADEMARK OFFICE

UNITED STATES DEPARTMENT OF COMMERCE
United States Patent and Trademark Office
Address: COMMISSIONER FOR PATENTS
P.O. Box 1450
Alexandria, Virginia 22313-1450
www.uspto.gov

APPLICATION NUMBER	FILING OR 371(C) DATE	FIRST NAMED APPLICANT	ATTY. DOCKET NO./TITLE
12/543,195	08/18/2009	Sammy Lee Johnson II	Johnson, Sammy Lee

CONFIRMATION NO. 6847

POWER OF ATTORNEY NOTICE

90084
Timothy John Van Tuinen, LLC
P.O.Box 351043
Toledo, OH 43635

OC000000044370895

Date Mailed: 11/05/2010

NOTICE REGARDING CHANGE OF POWER OF ATTORNEY

This is in response to the Power of Attorney filed 10/15/2010.

- The withdrawal as attorney in this application has been accepted. Future correspondence will be mailed to the new address of record. 37 CFR 1.33.

/atkelley/

Office of Data Management, Application Assistance Unit (571) 272-4000, or (571) 272-4200, or 1-888-786-0101

SPE RESPONSE FOR CERTIFICATE OF CORRECTION

DATE : 6/13/11

TO SPE OF : ART UNIT 2891

SUBJECT : Request for Certificate of Correction for Appl. No.: 12543221 Patent No.: 7932612

CofC mailroom date: 05/26/11

Please respond to this request for a certificate of correction within 7 days.

FOR IFW FILES:

Please review the requested changes/corrections as shown in the **COCIN** document(s) in the IFW application image. No new matter should be introduced, nor should the scope or meaning of the claims be changed.

Please complete the response (see below) and forward the completed response to scanning using document code **COCX**.

FOR PAPER FILES:

Please review the requested changes/corrections as shown in the attached certificate of correction. Please complete this form (see below) and forward it with the file to:

Certificates of Correction Branch (CofC)
Randolph Square – 9D10-A
Palm Location 7580
You can fax the Directors/SPE response to 571-270-9990

Note: **Related U.S. Application Data**

Lamonte Newsome

Certificates of Correction Branch

571-272-3421

Thank You For Your Assistance

The request for issuing the above-identified correction(s) is hereby:
Note your decision on the appropriate box.

- ☑ **Approved** — **All** changes apply.
- ☐ **Approved in Part** — Specify below which changes **do not** apply.
- ☐ **Denied** — State the reasons for denial below.

SPE RESPONSE FOR CERTIFICATE OF CORRECTION

Comments: _____

K Bryant 2891

SPE K Bryant Art Unit 2891

UNITED STATES PATENT AND TRADEMARK OFFICE

Commissioner for Patents
United States Patent and Trademark Office
P.O. Box 1450
Alexandria, VA 22313-1450
www.uspto.gov

MAILED

AUG 24 2010

OFFICE OF PETITIONS

VEDDER PRICE P.C.
222 N. LASALLE STREET
CHICAGO, IL 60601

In re Application of	:	
Philip K. Preston et al	:	DECISION GRANTING STATUS
Application No. 12/543,230	:	UNDER 37 CFR 1.47(a)
Filed: August 18, 2009	:	
Attorney Docket No. 00645.00.0027	:	

This is a decision on the petition filed January 4, 2010 under 37 CFR 1.47(a).

The petition is **GRANTED.**

Petitioner has shown that the non-signing inventor Phil A. Emms has refused to join in the filing of the above-identified application.

The application and papers have been reviewed and found in compliance with 37 CFR 1.47(a). This application is hereby accorded Rule 1.47(a) status.

As provided in 37 CFR 1.47(c), this Office will forward notice of this application's filing to the non-signing inventor at the address given in the petition. Notice of the filing of this application will also be published in the Official Gazette.

This matter is being referred to the Office of Patent Application Processing.

Telephone inquiries regarding this decision should be directed to Irvin Dingle at (571) 272-3210.

David Bucci
Petitions Examiner
Office of Petitions

UNITED STATES PATENT AND TRADEMARK OFFICE

Commissioner for Patents
United States Patent and Trademark Office
P.O. Box 1450
Alexandria, VA 22313-1450
www.uspto.gov

MAILED
AUG 24 2010
OFFICE OF PETITIONS

Phil A. Emms
90 Elkside Road
Elkton, MD 21921

In re Application of
Philip K. Preston; Phil A. Emms
Application No. 12/543,230
Filed: August 18, 2009
For: LOW-NOISE FAN CONTROL FOR REFRIGERATION CYCLE

Dear Mr. Emms:

You are named as a joint inventor in the above-identified United States patent application, filed under the provisions of 35 U.S.C. 116 (United States Code), and 37 CFR 1.47(a), Rules of Practice in Patent Cases. Should a patent be granted on the application you will be designated therein as a joint inventor.

As a named inventor you are entitled to inspect any paper in the file wrapper of the application, order copies of all or any part thereof (at a prepaid cost per 37 CFR 1.19) or make your position of record in the application. Alternatively, you may arrange to do any of the preceding through a registered patent attorney or agent presenting written authorization from you. If you care to join the application, counsel of record (see below) would presumably assist you. Joining the application would entail the filing of an appropriate oath or declaration by you pursuant to 37 CFR 1.63.

Telephone inquiries regarding this communication should be directed to Irvin Dingle at (571) 272-3210. Requests for information regarding your application should be directed to the File Information Unit at (703) 308-2733. Information regarding how to pay for and order a copy of the application, or a specific paper in the application, should be directed to the Certification Division at (703) 308-9726 or 1 (800) 972-6382 (outside the Washington, DC area).

David Bucci
Petition Examiner
Office of Petitions

cc: Vedder Price P.C.
222 N. LaSalle Street
Chicago, IL 60601

SPE RESPONSE FOR CERTIFICATE OF CORRECTION

DATE : 9/30/2011

TO SPE OF : ART UNIT 2858 Koval Melissa (spe)

SUBJECT : Request for Certificate of Correction for Appl. No.: 12/543236 Patent No.: 7852646

CofC mailroom date: 9/20/2011

Please respond to this request for a certificate of correction within 7 days.

FOR IFW FILES:

Please review the requested changes/corrections as shown in the **COCIN** document(s) in the IFW application image. No new matter should be introduced, nor should the scope or meaning of the claims be changed.

Please complete the response (see below) and forward the completed response to scanning using document code **COCX**.

FOR PAPER FILES:

Please review the requested changes/corrections as shown in the attached certificate of correction. Please complete this form (see below) and forward it with the file to:

Certificates of Correction Branch (CofC)
Randolph Square – 9D10-A
Palm Location 7580

Note: _____

_____

Certificates of Correction Branch

571-272-8680 _____

Thank You For Your Assistance

The request for issuing the above-identified correction(s) is hereby:
Note your decision on the appropriate box.

- ☒ **Approved** — **All** changes apply.
- ☐ **Approved in Part** — Specify below which changes **do not** apply.
- ☐ **Denied** — State the reasons for denial below.

Comments: _____

/Patrick Assouad/ — **SPE**

2858 — **Art Unit**

UNITED STATES PATENT AND TRADEMARK OFFICE

Commissioner for Patents
United States Patent and Trademark Office
P.O. Box 1450
Alexandria, VA 22313-1450
www.uspto.gov

MAIL

SEP 02 2010

DIRECTOR'S OFFICE
TECHNOLOGY CENTER 2600

BLAKELY SOKOLOFF TAYLOR & ZAFMAN LLP
1279 OAKMEAD PARKWAY
SUNNYVALE CA 94085-4040

In re Application of	:	
SAITO, KAZUYUKI et al	:	DECISION ON REQUEST TO
Application No. 12/543,265	:	PARTICIPATE IN PATENT
Filed: August 18, 2009	:	PROSECUTION HIGHWAY
Attorney Docket No. 8616P775	:	PROGRAM AND PETITION
	:	TO MAKE SPECIAL UNDER
	:	37 CFR 1.102(d)

This is a decision on the request to participate in the Patent Prosecution Highway (PPH) program and the petition under 37 CFR 1.102(d), filed July 07, 2010, to make the above-identified application special.

The request and petition are **DISMISSED**.

A grantable request to participate in the PPH program and petition to make special require:

(1) The U.S. application must validly claim priority under 35 U.S.C. 119(a) to one or more applications filed in the JPO;
(2) Applicant must submit a copy of the allowable/patentable claim(s) from the JPO application(s) along with an English translation thereof and a statement that the English translation is accurate;
(3) All the claims in the U.S. application must sufficiently correspond or be amended to sufficiently correspond to the allowable/patentable claim(s) in the JPO application(s);
(4) Examination of the U.S. application has not begun;
(5) Applicant must submit a copy of all the office actions from each of the JPO application(s) containing the allowable/patentable claim(s) along with an English translation thereof and a statement that the English translation is accurate; and
(6) Applicant must submit an IDS listing the documents cited by the JPO examiner in the JPO office action along with copies of documents except U.S. patents or U.S. patent application publications.

The request to participate in the PPH program and petition is deficient as follows:

Petitioner has not complied with item 6 above.

Regarding item 6, while applicants have submitted IDS's listing documents cited by JPO examiner in the JPO office action along with copies of the documents, not all documents have

been listed with copies submitted. The submitted IDS's failed to include the document "Japanese Utility Model Application No. H03-074437" which was also cited by the JPO examiner in the JPO office action. An IDS listing the document H03-074437 along with a copy of the document is required.

Applicant is given a time period of **ONE MONTH or THIRTY DAYS**, whichever is longer, from the mailing date of this decision to correct the deficiencies. **NO EXTENSION OF TIME UNDER 37 CFR 1.136 IS PERMITTED.** If the deficiencies are not corrected with the time period given, the application will await action in its regular turn.

Telephone inquiries concerning this decision should be directed to Michael Horabik at 571-272-3068.

All other inquiries concerning the examination or status of the application should be directed to Patent Application Information Retrieval (PAIR) system.

/Michael Horabik/

Michael Horabik
Quality Assurance Specialist
Technology Center 2600
Communications

UNITED STATES PATENT AND TRADEMARK OFFICE

Commissioner for Patents
United States Patent and Trademark Office
P.O. Box 1450
Alexandria, VA 22313-1450
www.uspto.gov

MAIL

NOV 10 2010

DIRECTOR'S OFFICE
TECHNOLOGY CENTER 2600

BLAKELY SOKOLOFF TAYLOR & ZAFMAN LLP
1279 OAKMEAD PARKWAY
SUNNYVALE CA 94085-4040

In re Application of	:	
SAITO, KAZUYUKI et al	:	DECISION ON REQUEST TO
Application No. 12/543,265	:	PARTICIPATE IN PATENT
Filed: August 18, 2009	:	PROSECUTION HIGHWAY
Attorney Docket No. 8616P775	:	PROGRAM AND PETITION
	:	TO MAKE SPECIAL UNDER
	:	37 CFR 1.102(d)

This is a decision on the renewed request to participate in the Patent Prosecution Highway (PPH) program and the petition under 37 CFR 1.102(d), filed October 04, 2010 to make the above-identified application special.

The request and petition are **GRANTED**.

A grantable request to participate in the PPH program and petition to make special require:

(1) The U.S. application must validly claim priority under 35 U.S.C. 119(a) to one or more applications filed in the JPO;
(2) Applicant must submit a copy of the allowable/patentable claim(s) from the JPO application(s) along with an English translation thereof and a statement that the English translation is accurate;
(3) All the claims in the U.S. application must sufficiently correspond or be amended to sufficiently correspond to the allowable/patentable claim(s) in the JPO application(s);
(4) Examination of the U.S. application has not begun;
(5) Applicant must submit a copy of all the office actions from each of the JPO application(s) containing the allowable/patentable claim(s) along with an English translation thereof and a statement that the English translation is accurate;
(6) Applicant must submit an IDS listing the documents cited by the JPO examiner in the JPO office action along with copies of documents except U.S. patents or U.S. patent application publications.

The request to participate in the PPH program and petition now comply with the above requirements. Accordingly, the above-identified application has been accorded "special" status.

Telephone inquiries concerning this decision should be directed to Michael Horabik at 571-272-3068.

All other inquiries concerning the examination or status of the application should be directed to Patent Application Information Retrieval (PAIR) system.

The application is being forwarded to the examiner for action on the merits commensurate with this decision.

/Michael Horabik/

Michael Horabik
Quality Assurance Specialist
Technology Center 2600
Communications

UNITED STATES PATENT AND TRADEMARK OFFICE

UNITED STATES DEPARTMENT OF COMMERCE
United States Patent and Trademark Office
Address: COMMISSIONER FOR PATENTS
P.O. Box 1450
Alexandria, Virginia 22313-1450
www.uspto.gov

APPLICATION NO.	FILING DATE	FIRST NAMED INVENTOR	ATTORNEY DOCKET NO.	CONFIRMATION NO.
12/543,297	08/18/2009	Mikio WATANABE	PA21101US	7045

21254 7590 07/01/2011
MCGINN INTELLECTUAL PROPERTY LAW GROUP, PLLC
8321 OLD COURTHOUSE ROAD
SUITE 200
VIENNA, VA 22182-3817

EXAMINER
DASTOURI, MEHRDAD

ART UNIT	PAPER NUMBER
2486	

MAIL DATE	DELIVERY MODE
07/01/2011	PAPER

Please find below and/or attached an Office communication concerning this application or proceeding.

The time period for reply, if any, is set in the attached communication.

UNITED STATES PATENT AND TRADEMARK OFFICE

Commissioner for Patents
United States Patent and Trademark Office
P.O. Box 1450
Alexandria, VA 22313-1450
www.uspto.gov

MCGINN INTELLECTUAL PROPERTY LAW GROUP, PLLC
8321 OLD COURTHOUSE ROAD
SUITE 200
VIENNA VA 22182-3817

In re Application of: Mikio WATANABE
Application No. 12543297
Filed: August 18, 2009
For: IMAGE PROCESSING DEVICE AND METHOD, AND COMPUTER READABLE RECORDING MEDIUM CONTAINING PROGRAM

DECISION ON REQUEST TO PARTICIPATE IN PATENT PROSECUTION HIGHWAY PROGRAM AND PETITION TO MAKE SPECIAL UNDER 37 CFR 1.102(d)

This is a decision on the request to participate in the Patent Prosecution Highway (PPH) program and the petition under 37 CFR 1.102(d), filed March 2, 2011, to make the above-identified application special.

The petition is **GRANTED.**

A grantable request to participate in the PPH program and petition to make special require:

(1) The U.S. application is
(a) a Paris Convention application which either
(i) validly claims priority under 35 U.S.C. 119(a) and 37 CFR 1.55 to one or more applications filed in the JPO, or
(ii) validly claims priority to a PCT application that contains no priority claims,

Or

(b) a national stage application under the PCT (an application which entered the national stage in the U.S. from a PCT international application after compliance with 35 U.S.C. 371), which PCT application
(i) validly claims priority to an application filed in the JPO, or
(ii) validly claims priority to a PCT application that contains no priority claims, or
(iii) contains no priority claim,

Or

(c) a so-called bypass application filed under 35 U.S.C. 111 (a) which validly claims benefit under 35 U.S.C. 120 to a PCT application, which PCT application
(i) validly claims priority to an application filed in the JPO, or
(ii) validly claims priority to a PCT application that contains no priority claims, or
(iii) contains no priority claim.

Where the JPO application that contains the allowable/patentable claims is not the same application for which priority is claimed in the U.S. application, applicant must identify the relationship between the JPO application that contains the allowable/patentable claims and the JPO priority application claimed in the U.S. application;

(2) Applicant must submit a copy of:
a. The allowable/patentable claim(s) from the JPO application(s);
b. An English translation of the allowable/patentable claim(s), if the claims were published in a language other than English); and
c. A statement that the English translation is accurate;

(3) Applicant must:
a. Ensure all the claims in the U.S. application must sufficiently correspond or be amended to sufficiently correspond to the allowable/patentable claim(s) in the JPO application(s) and
b. Submit a claim correspondence table in English;

(4) Examination of the U.S. application has not begun;

(5) Applicant must submit:
a. A copy of all the office action(s) (which are relevant to patentability), excluding "Decision to Grant a Patent" from each of the JPO application(s) containing the allowable/patentable claim(s);
b. An English language translation of the JPO office action(s) (if the office action(s) are not in the English language); and
c. A statement that the English translation is accurate;

(6) Applicant must submit:
a. An IDS listing the documents cited by the JPO examiner in the JPO office action (unless already filed in this application); and
b. Copies of all the documents cited in the JPO office action, except U.S. patents or U.S. patent application publications (unless already filed in this application).

The request to participate in the PPH program and petition are found to comply with all the above requirements. Accordingly, the above-identified application has been accorded "special" status.

Telephone inquiries concerning this decision should be directed to Kim Huynh at 571-272-4147. All other inquiries concerning the examination or status of the application is accessible in the PAIR system at http://www.uspto.gov/ebc/index.html.

/Kim Huynh/

Kim Huynh
Quality Assurance Specialist
Technology Center 2400

UNITED STATES PATENT AND TRADEMARK OFFICE

UNITED STATES DEPARTMENT OF COMMERCE
United States Patent and Trademark Office
Address: COMMISSIONER FOR PATENTS
P.O. Box 1450
Alexandria, Virginia 22313-1450
www.uspto.gov

APPLICATION NO.	FILING DATE	FIRST NAMED INVENTOR	ATTORNEY DOCKET NO.	CONFIRMATION NO.
12/543,327	08/18/2009	John R. Wilson	055665-0211	7120

27433 7590 07/22/2011
FOLEY & LARDNER LLP
321 NORTH CLARK STREET
SUITE 2800
CHICAGO, IL 60654-5313

EXAMINER
FRISTOE JR, JOHN K

ART UNIT	PAPER NUMBER
3753	

MAIL DATE	DELIVERY MODE
07/22/2011	PAPER

Please find below and/or attached an Office communication concerning this application or proceeding.

The time period for reply, if any, is set in the attached communication.

UNITED STATES PATENT AND TRADEMARK OFFICE

Commissioner for Patents
United States Patent and Trademark Office
P.O. Box 1450
Alexandria, VA 22313-1450
www.uspto.gov

FOLEY & LARDNER LLP
321 NORTH CLARK STREET
SUITE 2800
CHICAGO IL 60654-5313

In re Application of	:	
WILSON, JOHN R.	:	DECISION ON PETITION
Appl. No.: 12/543,327	:	UNDER 37 CFR 1.59
Attorney's Docket No.	:	
Filed: Aug. 29, 2007	:	
For: FLUSH VALVE HANDLE ASSEMBLY	:	
PROVIDING DUAL MODE OPERATION	:	
	:	

This is a decision on the petition filed on June 7, 2011 by which petitioner requests that certain material be expunged from the application. The petition is being considered pursuant to 37 CFR 1.59 and MPEP § 724.06.

The petition is granted.

Petitioner requests that documents listed on the Information Disclosure Statement under M.P.E.P. § 724 filed on June 7, 2011 be expunged from the record. On June 16, 2011, a notice of allowance was mailed. The information in question also has been determined by the undersigned to not be material to the examination of the instant application. The proprietary information disclosure statement filed on June 16, 2011 is now removed from the official file. The material will remain in the artifact folder sealed from the public.

Applicant is required to retain the expunged material(s) for the life on any patent which issues on the above-identified application.

Any questions regarding this petition decision should be directed to Henry Yuen, Technology Center, Special Programs Examiner at 571 – 272-4856.

PETITION GRANTED.

Angela D. Sykes

Angela D. Sykes, Director
Technology Center 3700

UNITED STATES PATENT AND TRADEMARK OFFICE

Commissioner for Patents
United States Patent and Trademark Office
P.O. Box 1450
Alexandria, VA 22313-1450
www.uspto.gov

PATTERSON & SHERIDAN, L.L.P.
3040 POST OAK BOULEVARD
SUITE 1500
HOUSTON TX 77056

MAILED

AUG 01 2011

OFFICE OF PETITIONS

In re Application of	:	
Anthony Neal Park et al.	:	
Application No. 12/543,328	:	DECISION ON PETITION
Filed: August 18, 2009	:	UNDER 37 CFR 1.137(b)
Attorney Docket No. NETF/0015	:	

This is a decision on the petition, filed July 5, 2011, a petition under 37 CFR 1.137(b) to revive the instant nonprovisional application for failure to timely notify the U.S. Patent and Trademark (USPTO) of the filing of an application in a foreign country, or under a multinational treaty that requires publication of applications eighteen months after filing. *See* 37 CFR 1.137(f).

The petition is **GRANTED**.

Petitioner states that the instant nonprovisional application is the subject of an application filed in an eighteen-month publication country on August 17, 2010. However, the USPTO was unintentionally not notified of this filing within 45 days subsequent to the filing of the subject application in an eighteen-month publication country.

In view of the above, this application became abandoned pursuant to 35 U.S.C. § 22(b)(2)(B)(iii) and 37 CFR 1.213(c) for failure to timely notify the Office of the filing of an application in a foreign country or under a multilateral international agreement that requires publication of applications 18 months after filing.

A petition to revive an application abandoned pursuant to 35 U.S.C. 122(b)(2)(B)(iii) for failure to notify the USPTO of a foreign filing must be accompanied by:

(1) the required reply which is met by the notification of such filing in a foreign country or under a multinational treaty;
(2) the petition fee as set forth in 37 CFR 1.17(m); and
(3) a statement that the entire delay in filing the required reply from the due date of the reply until the filing of a grantable petition was unintentional.

The instant petition has been found to be in compliance with 37 CFR 1.137(b). Accordingly, the failure to timely notify the USPTO of a foreign or international filing within 45 days after the date of filing of such foreign or international application as provided by 35 U.S.C. § 122(b)(2)(B)(iii) and 37 CFR 1.213(c) is accepted as having been unintentionally delayed.

The previous Request and Certification under 35 U.S.C. § 122(b)(2)(B)(i) has been rescinded. A Notice Regarding Rescission of Nonpublication Request which sets forth the projected publication date of November 3, 2011 accompanies this decision on petition.

Telephone inquiries concerning this decision should be directed to Kimberly Inabinet at (571) 272-4618.

This application is being forwarded to Technology Center 2484 for further processing.

/Kimberly Inabinet/

Kimberly Inabinet
Petitions Examiner
Office of Petitions

ATTACHMENT: Notice Regarding Rescission of Nonpublication Request

UNITED STATES PATENT AND TRADEMARK OFFICE

UNITED STATES DEPARTMENT OF COMMERCE
United States Patent and Trademark Office
Address: COMMISSIONER FOR PATENTS
P.O. Box 1450
Alexandria, Virginia 22313-1450
www.uspto.gov

APPLICATION NUMBER	FILING OR 371(C) DATE	FIRST NAMED APPLICANT	ATTY. DOCKET NO./TITLE
12/543,328	08/18/2009	Anthony Neal PARK	NETF/0015

CONFIRMATION NO. 7123

26290
PATTERSON & SHERIDAN, L.L.P.
3040 POST OAK BOULEVARD
SUITE 1500
HOUSTON, TX 77056

NONPUBLICATION RESCISSION LETTER

OC000000048930210

Date Mailed: 07/25/2011

Communication Regarding Rescission Of Nonpublication Request and/or Notice of Foreign Filing

Applicant's rescission of the previously-filed nonpublication request and/or notice of foreign filing is acknowledged. The paper has been reflected in the Patent and Trademark Office's (USPTO's) computer records so that the earliest possible projected publication date can be assigned.

The projected publication date is 11/03/2011.

If applicant rescinded the nonpublication request before or on the date of "foreign filing,"[1] then no notice of foreign filing is required.

If applicant foreign filed the application after filing the above application and before filing the rescission, and the rescission did not also include a notice of foreign filing, then a notice of foreign filing (not merely a rescission) is required to be filed within 45 days of the date of foreign filing. See 35 U.S.C. § 122(b)(2)(B)(iii), and Clarification of the United States Patent and Trademark Office's Interpretation of the Provisions of 35 U.S.C. § 122(b)(2)(B)(ii)-(iv), 1272 Off. Gaz. Pat. Office 22 (July 1, 2003).

If a notice of foreign filing is required and is not filed within 45 days of the date of foreign filing, then the application becomes abandoned pursuant to 35 U.S.C. § 122(b)(2)(B)(iii). In this situation, applicant should either file a petition to revive or notify the Office that the application is abandoned. See 37 CFR 1.137(f). Any such petition to revive will be forwarded to the Office of Petitions for a decision. Note that the filing of the petition will not operate to stay any period of reply that may be running against the application.

Questions regarding petitions to revive should be directed to the Office of Petitions at (571) 272-3282.

[1] Note, for purpose of this notice, that "foreign filing" means "filing an application directed to the same invention in another country, or under a multilateral international agreement, that requires publication of applications 18 months after filing".

/kainabinet/

Office of Data Management, Application Assistance Unit (571) 272-4000, or (571) 272-4200, or 1-888-786-0101

UNITED STATES PATENT AND TRADEMARK OFFICE

Commissioner for Patents
United States Patent and Trademark Office
P.O. Box 1450
Alexandria, VA 22313-1450
www.uspto.gov

MAILED
MAR 02 2012
OFFICE OF PETITIONS

OLEG S FISHMAN
1 SALJON COURT
MAPLE GLEN PA 19002

In re Application of
Fishman
Application No. 12/543,338
Filed: August 18, 2009
Attorney Docket No. OSF-005CIP

DECISION ON PETITION

This is a decision on the petition under the unintentional provisions of 37 CFR 1.137(b), filed January 31, 2012, to revive the above-identified application.

The petition is **GRANTED**.

This above-identified application became abandoned for failure to timely file a reply to the non-final Office action mailed May 20, 2011. The non-final Office action set a three (3) month shortened statutory period for reply. No extensions of time were obtained under the provisions of 37 CFR 1.136(a). Accordingly, this application became abandoned on August 21, 2011. A Notice of Abandonment was mailed on December 1, 2011.

The petition satisfies the requirements of 37 CFR 1.137(b) in that petitioner has supplied (1) the reply in the form of an amendment and fee (2) the petition fee of $930.00, and (3) a statement of unintentional delay.

Telephone inquiries concerning this decision should be directed to the undersigned at (571) 272-3215.

This application is being referred to Technology Center AU 2836 for appropriate action by the Examiner in the normal course of business on the reply received

Charlema Grant
Attorney Advisor
Office of Petitions

UNITED STATES PATENT AND TRADEMARK OFFICE

Commissioner for Patents
United States Patent and Trademark Office
P.O. Box 1450
Alexandria, VA 22313-1450
www.uspto.gov

RADER, FISHMAN & GRAUER PLLC
39533 WOODWARD AVENUE, SUITE 140
BLOOMFIELD HILLS MI 48304-0610

MAILED

OCT 01 2010

OFFICE OF PETITIONS

In re Application of
Albert M. GOLDSTEIN, et *al.*
Application No. 12/543,345
Filed: August 18, 2009
Attorney Docket No. **66912-0002**

DECISION ON PETITION TO WITHDRAW FROM RECORD

This is a decision on the Request to Withdraw as attorney or agent of record under 37 C.F.R. § 1.36(b), filed August 26, 2010.

The request is **NOT APPROVED**.

The request to withdraw as attorney/agent of record and change of correspondence address is hereby not accepted. Petitioner has not complied with current USPTO requirements, set forth in 37 CFR 10.40 concerning Request for Withdrawal as Attorney and Change of Correspondence Address. Specifically, pursuant to 37 CFR 10.40, the Office will require the practitioner(s) to certify that he, she or they have:

> (1) given reasonable notice to the client, prior to the expiration of the reply period, that the practitioner(s) intends to withdraw from employment;
>
> (2) delivered to the client or duly authorized representative of the client all papers and property (including funds) to which the client is entitled; and
>
> **(3) notified the client of any replies that may be due and the time frame within which the client must respond.**

Petitioner has not complied with item (3) of the above certifications.

Further, the Office will only accept correspondence address changes to the most current address information provided for the assignee of the entire interest *who properly became of record under 37 CFR 3.71*, or if no assignee of the entire interest has properly been made of record, the most current address information provided for the first named inventor. 37 CFR 3.71 (c) states:

An assignee becomes of record either in a national patent application or a reexamination proceeding by filing a statement in compliance with § 3.73 (b) that is signed by a party who is authorized to act on behalf of the assignee.

The Office will also no longer change the correspondence address to that of a new practitioner unless the Request is accompanied by a power of attorney to a new practitioner (e.g., Form PTO/SB/82). All future communications from the Office will be directed to the above-listed address until otherwise properly notified by the applicant or a proper change of correspondence address has been submitted.

Telephone inquiries concerning this decision should be directed to the undersigned at (571) 272- 7253.

All other inquires concerning either the examination or status of the application should be directed to the Technology Center at (571) 272-3700.

/Monica A. Graves/
Petitions Examiner, Office of Petitions

cc: **VTM CORPORATION**
277 ALICE AVNEU
BLOOMFIELD, MI 48302

Doc Code: PET.GREEN
Document Description: Petition for Green Tech Pilot

PTO/SB/420 (03-11)

PETITION TO MAKE SPECIAL UNDER THE GREEN TECHNOLOGY PILOT PROGRAM

Attorney Docket Number: LS00014US	Application Number (if known): 12/543,412	Filing date: August 18, 2009

First Named Inventor: HU, Zhihao

Title: SYSTEMS AND METHODS FOR PRODUCTION OF MIXED FATTY ESTERS

APPLICANT HEREBY REQUESTS TO PARTICIPATE IN THE GREEN TECHNOLOGY PILOT PROGRAM FOR THE ABOVE-IDENTIFIED APPLICATION. See Instruction Sheet on page 2.

This petition must be timely filed electronically using the USPTO electronic filing system, EFS-Web.

1. By filing this petition:

   Applicant is requesting early publication: Applicant hereby requests early publication under 37 CFR 1.219 and the publication fee set forth in 37 CFR 1.18(d) accompanies this request.

2. By filing this petition: applicant is agreeing to make an election without traverse in a telephonic interview and elect an invention that meets the eligibility requirements for the Green Technology Pilot Program, if the Office determines that the claims are not obviously directed to a single invention. See Instruction Sheet.

3. This request is accompanied by statements of special status for the eligibility requirement.

4. The application contains no more than three (3) independent claims and twenty (20) total claims.

5. The application does not contain any multiple dependent claims.

6. Other attachments: 1) Statements of Special Status for the Eligibility Requirements; 2) Preliminary Amendment

Signature	Date December 27, 2011
Name (Print/Typed) Linda R. Judge	Registration Number 42,702

Note: *Signatures of all the inventors or assignees of record of the entire interest or their representative(s) are required in accordance with 37 CFR 1.33 and 11.18. Please see 37 CFR 1.4(d) for the form of the signature. If necessary, submit multiple forms for more than one signature, see below*.*

☐ *Total of _____ forms are submitted.

If you need assistance in completing the form, call 1-800-PTO-9199 and select option 2.

UNITED STATES PATENT AND TRADEMARK OFFICE

UNITED STATES DEPARTMENT OF COMMERCE
United States Patent and Trademark Office
Address: COMMISSIONER FOR PATENTS
P.O. Box 1450
Alexandria, Virginia 22313-1450
www.uspto.gov

APPLICATION NO.	FILING DATE	FIRST NAMED INVENTOR	ATTORNEY DOCKET NO.	CONFIRMATION NO.
12/543,412	08/18/2009	Zhihao Hu	LS00014 PCT/US	7281

80782 7590 01/17/2012
LS9, Inc.
600 Gateway Boulevard
South San Francisco, CA 94080

EXAMINER
CARR, DEBORAH D

ART UNIT	PAPER NUMBER
1622	

NOTIFICATION DATE	DELIVERY MODE
01/17/2012	ELECTRONIC

Please find below and/or attached an Office communication concerning this application or proceeding.

The time period for reply, if any, is set in the attached communication.

Notice of the Office communication was sent electronically on above-indicated "Notification Date" to the following e-mail address(es):

chgpatent@leydig.com
ljudge@ls9.com

UNITED STATES PATENT AND TRADEMARK OFFICE

Commissioner for Patents
United States Patent and Trademark Office
P.O. Box 1450
Alexandria, VA 22313-1450
www.uspto.gov

JAN 17 2012

LS9, Inc.
600 Gateway Boulevard
South San Francisco CA 94080

In re Application of	:	
HU, Zhihao *et al.*	:	DECISION ON PETITION
Application No. 12/543412	:	TO MAKE SPECIAL UNDER
Filed: August 18, 2009	:	THE GREEN TECHNOLOGY
Attorney Docket No. LS00014 PCT/US	:	PILOT PROGRAM

This is a decision on the petition under 37 CFR 1.102, filed December 27, 2011, to make the above-identified application special under the pilot program for applications pertaining to Green Technologies as set forth in 74 Federal Register Notice 64666 (December 8, 2009) and amended by 75 Federal Register Notice 28554 (May 21, 2010) and 75 Federal Register Notice 69049 (November 10, 2010).

The petition is **GRANTED**.

A grantable petition to make an application special under 37 CFR 1.102 and the pilot program as set forth in 74 FR 64666 must be directed to a nonprovisional application filed under 35 USC 111(a) or be a national stage entry under 35 USC 371, exclusive of any reissue applications.

In order to qualify for special status, the following requirements must be met. 1) The application must have no more than 3 independent claims and no more than 20 total claims. 2) The application must not contain any multiple dependent claims. 3) The petition must state the basis for seeking special status, i.e., the claimed invention either: A) materially enhances the quality of the environment or B) materially contributes to: i) the discovery or development of renewable energy resources, ii) the more efficient utilization and conservation of energy resources, or iii) greenhouse gas emission reduction. 4) If the disclosure is not clear on its face that the claimed invention materially contributes under category (A) or (B), the petition must be accompanied by a statement by the applicant, assignee, or an attorney/agent registered to practice before the Office explaining how the materiality standard is met. 5) A statement that applicant will agree to make an election without traverse in a telephonic interview if a restriction requirement is made by the examiner. 6) The petition to make special must be filed electronically. 7) The petition must be filed at least one day prior to the date that a first Office Action appears in the Patent Application Information Retrieval (PAIR) system. 8) The petition must be accompanied by a request for early publication in compliance with 37 CFR 1.219 and include the publication fee as set forth in 37 CFR 1.18(d).

The requirement for a fee for consideration of the petition to make special for applications pertaining to Green Technologies has been waived.

The instant petition complies with items 1 – 8 above. Accordingly, the above-identified application has been accorded "special" status.

Telephone inquires concerning this decision should be directed to Manjunath Rao at 571-272-0939.

The application is being forwarded to the Technology Center Art Unit 1622 for action on the merits commensurate with this decision.

/Manjunath Rao/

Manjunath Rao
Supervisory Patent Examiner &
POC for TC 1600 Green Tech Petitions
Technology Center 1600

UNITED STATES PATENT AND TRADEMARK OFFICE

Commissioner for Patents
United States Patent and Trademark Office
P.O. Box 1450
Alexandria, VA 22313-1450
www.uspto.gov

MAILED
SEP 07 2011
OFFICE OF PETITIONS

DLA PIPER LLP (US)
2000 UNIVERSITY AVENUE
EAST PALO ALTO CA 94303-2248

In re Application of	:	
Sarin, et al.	:	
Application No. 12/543,424	:	ON PETITION
Filed: August 18, 2009	:	
Attorney Docket No. 351913-993091	:	

This is in response to petition to revive under 37 CFR 1.137(b), filed May 31, 2011.

The petition under 37 CFR 1.137(b) is **GRANTED**.

The above-identified application became abandoned for failure to file a proper response to the final Office action, mailed October 15, 2010, which set a shortened statutory period for reply of three months. No reply having been received, the application became abandoned on January 16, 2011. The Office mailed a Notice of Abandonment on May 12, 2011.

With the instant petition, petitioner paid the petition fee, made the proper statement of unintentional delay, and submitted the required reply in the form of an RCE (together with a submission).

Pursuant to 37 CFR 1.136, an extension of time must be filed prior to the expiration of the maximum period obtainable for reply to avoid abandonment. Accordingly, since the $1110.00 extension of time fee submitted with the petition on May 31, 2011 was subsequent to the maximum period obtainable for reply (April 15, 2011), this fee has been refunded to petitioner's Deposit Account 07-1896.

The application is being forwarded to Group Art Unit 2824 for consideration of the RCE, filed May 31, 2011.

Telephone inquiries concerning this decision may be directed to the undersigned at 571-272-3207.

Cliff Congo
Petitions Attorney
Office of Petitions

UNITED STATES PATENT AND TRADEMARK OFFICE

Commissioner for Patents
United States Patent and Trademark Office
P.O. Box 1450
Alexandria, VA 22313-1450
www.uspto.gov

BECKMAN c/o MORRISON & FOERSTER LLP
12531 HIGH BLUFF DRIVE
SUITE 100
SAN DIEGO CA 02130-2040

MAILED
DEC 06 2010
OFFICE OF PETITIONS

In re Application of
Kenneth E. Blick
Application No. 12/543,427
Filed: August 18, 2009
Attorney Docket No. **482022001500**
(07US0038)

DECISION ON PETITION
TO WITHDRAW
FROM RECORD

This is a decision on the request to withdraw as attorney of record under 37 CFR § 1.36, filed November 2, 2010.

The request is **NOT APPROVED**.

The request cannot be approved because it lacks a forwarding correspondence address of the first named inventor or a properly intervening assignee.

If the forwarding correspondence address is to the assignee, the Office will only accept correspondence address changes to the most current address information provided for the assignee of the entire interest *that properly became of record under 37 CFR 3.71.* 37 CFR 3.71(c) states:

> *An assignee becomes of record either in a national patent application or a reexamination proceeding by filing a statement in compliance with § 3.73(b) that is signed by a party who is authorized to act on behalf of the assignee.*

The assignee must establish its ownership of the patent to the satisfaction of the Director. In this regard, the statement under 37 CFR 3.73(b) must have either: (i) documentary evidence of a chain of title from the original owner to the assignee (*e.g.*, copy of an executed assignment), and a statement affirming that the documentary evidence of the chain of title from the original owner to the assignee was or concurrently is being submitted for recordation pursuant to § 3.11; or (ii) a statement specifying where documentary evidence of a chain of title from the original owner to the assignee is recorded in the assignment records of the Office (*e.g.*, reel and frame number).

All future communications from the Office will continue to be directed to the above-listed address until otherwise notified by applicant.

Telephone inquires concerning this decision should be directed to the undersigned at (571) 272-2991.

Terri Johnson
Petitions Examiner
Office of Petitions

cc: **BECKMAN COULTER, INC.**
250 S. Kramer Blvd.
Brea, CA 92821

UNITED STATES PATENT AND TRADEMARK OFFICE

Commissioner for Patents
United States Patent and Trademark Office
P.O. Box 1450
Alexandria, VA 22313-1450
www.uspto.gov

THE JANSSON FIRM
3616 Far West Blvd
Ste 117-314
AUSTIN TX 78731

MAILED

DEC 16 2010

OFFICE OF PETITIONS

In re Application of
Marc Torres
Application No. 12/543,453
Filed: 08/18/2009
Docket No. BENCH001
Title: SYSTEM AND METHOD FOR PROVIDING ACCESS TO LOG DATA FILES

DECISION ON PETITION

This is in response to the renewed petition under 37 CFR 1.47(b), filed September 1, 2010.

The petition is **dismissed**.

Petitioner is given TWO (2) MONTHS from the mailing date of this decision to respond, correcting the below-noted deficiencies. Any response should be entitled "Request for Reconsideration of Petition Under 37 CFR 1.47(b)" and may include an oath or declaration executed by the inventor. **Failure to respond will result in abandonment of the application**. Any extensions of time will be governed by 37 CFR 1.136(a).

A grantable petition under 37 CFR 1.47(b) requires: (1) proof that the non-signing inventor cannot be reached or refuses to sign the oath or declaration; (2) an acceptable oath or declaration; (3) the petition fee; (4) a statement of the last known address of the non-signing inventor; (5) proof of proprietary interest; and (6) proof of irreparable damage.

Petitioner lacks item (2) set forth above.

As to item (2), the declaration for the patent application submitted by petitioner is unacceptable. In this regard, the declaration is physically part of the petition and is not in compliance with 37 CFR 1.63 and 1.64 or 1.4(c). 37 CFR 1.4(c) states that each distinct subject must be contained in a separate paper since different matters may be considered by different branches of the United States Patent and Trademark Office.

Further, the Office reminds petitioner that:

> The 37 CFR 1.47(b) applicant must make the oath required by 37 CFR 1.63 and 1.64 or 1.175. Where a corporation is the 37 CFR 1.47(b) applicant, an officer (President, Vice-President, Secretary, Treasurer, or Chief Executive Officer) thereof should normally sign the necessary oath or declaration. A corporation may authorize any person, including an attorney or agent registered to practice before the U.S. Patent and Trademark Office, to sign the application oath or declaration on its behalf. Where an oath or declaration is signed by a registered attorney or agent on behalf of a corporation, either proof of the attorney's or agent's authority in the form of a statement signed by an appropriate corporate officer must be submitted, or the attorney or agent may simply state that he or she is authorized to sign on behalf of the corporation. Where the oath or declaration is being signed on behalf of an assignee, see MPEP Section 324. An inventor may not authorize another individual to act as his or her agent to sign the application oath or declaration on his or her behalf. *Staeger v. Commissioner*, 189 USPQ 272 (D.D.C. 1976), *In re Striker*, 182 USPQ 507 (Comm'r Pat. 1973). Where an application is executed by one other than the inventor, the declaration required by 37 CFR 1.63 must state the full name, residence, post office address, and citizenship of the nonsigning inventor. Also, the title or position of the person signing must be stated if signing on behalf of a corporation under 37 CFR 1.47(b).

Accordingly, petitioner must submit a declaration setting forth the full name, residence, post office address, and citizenship of the non-signing inventor. Additionally, the declaration must be signed on behalf of the non-signing inventor in compliance with 37 CFR 1.63 and 1.64 as indicated above. A declaration form accompanies this decision for petitioner's assistance.

Further correspondence with respect to this matter should be addressed as follows:

By mail: Mail Stop Petition
Commissioner for Patents
P.O. Box 1450
Alexandria, VA 22313-1450

By FAX: (571) 273-8300
Attn: Office of Petitions

By hand: Customer Service Window
Randolph Building
401 Dulany Street
Alexandria, VA 22314

Correspondence may also be submitted via the Electronic Filing System of the USPTO.

Telephone inquiries related to this decision should be directed to the undersigned at (571) 272-3211.

C. T. Donnell

Christina Tartera Donnell
Senior Petitions Attorney
Office of Petitions

UNITED STATES PATENT AND TRADEMARK OFFICE

Commissioner for Patents
United States Patent and Trademark Office
P.O. Box 1450
Alexandria, VA 22313-1450
www.uspto.gov

THE JANSSON FIRM
3616 Far West Blvd
Ste 117-314
Austin TX 78731

MAILED
MAR 04 2011
OFFICE OF PETITIONS

In re Application of TORRES, MARC Application No. 12/543,453 Filed: 08/18/2009 Attorney Docket No. BENCH001 Title: SYSTEM AND METHOD FOR PROVIDING ACCESS TO LOG DATA FILES	: : : : : : : :	DECISION ON PETITION

This is in response to the renewed petition under 37 CFR 1.47(b), filed February 8, 2011.

The petition is **GRANTED**.

Petitioner has shown that the non-signing inventor has refused to join in the filing of the above-identified application.

The application and papers have been reviewed and are in compliance with 37 CFR 1.47(b). This application is hereby accorded Rule 1.47(b) status. As provided in 37 CFR 1.47(c), this Office will forward notice of this application's filing to the non-signing inventor at the address given in the petition. Notice of the filing of this application will also be published in the Official Gazette.

This application is being referred to the Office of Patent Application Processing.

Telephone inquiries should be directed to the undersigned at (571) 272-3211.

Christina Tartera Donnell

Christina Tartera Donnell
Senior Petitions Attorney
Office of Petitions

UNITED STATES PATENT AND TRADEMARK OFFICE

Commissioner for Patents
United States Patent and Trademark Office
P.O. Box 1450
Alexandria, VA 22313-1450
www.uspto.gov

Mr. Marc Torres
7349 Via Paseo Del Sur #515-106
Scottsdale, AZ 85258

MAILED
MAR 04 2011
OFFICE OF PETITIONS

In re Application of :
TORRES, MARC :
Application No. 12/543,453 : LETTER
Filed: 08/18/2009 :
Attorney Docket No. BENCH001 :
Title: SYSTEM AND METHOD FOR :
PROVIDING ACCESS TO LOG DATA FILES :

Dear Mr. Torres:

You are named as the sole inventor in the above-identified United States patent application, filed under the provisions of 35 U.S.C. 116 (United States Code), and 37 CFR 1.47(b), Rules of Practice in Patent Cases. Should a patent be granted on the reissue application you will be designated therein as the sole inventor.

As a named inventor you are entitled to inspect any paper in the file wrapper of the application, order copies of all or any part thereof (at a prepaid cost per 37 CFR 1.19) or make your position of record in the application. Alternatively, you may arrange to do any of the preceding through a registered patent attorney or agent presenting written authorization from you. If you care to join the application, counsel of record (see below) would presumably assist you. Joining the application would entail the filing of an appropriate oath or declaration by you pursuant to 37 CFR 1.63.

Requests for information regarding your application should be directed to the File Information Unit at (703) 308-2733. Information regarding how to pay for and order a copy of the application, or a specific paper in the application should be directed to the Certification Division at (571) 272-3150 or (800) 972-6382 (outside the Washington, DC area).

C. T. Donnell

Christina Tartera Donnell
Senior Petitions Attorney
Office of Petitions

THE JANSSON FIRM
3616 Far West Blvd
Ste 117-314
Austin TX 78731

UNITED STATES PATENT AND TRADEMARK OFFICE

Commissioner for Patents
United States Patent and Trademark Office
P.O. Box 1450
Alexandria, VA 22313-1450
www.uspto.gov

SUNG I. OH, PROFESSIONAL LAW CORPORATION
710 QUAIL VALLEY LANE
WEST COVINA, CA 91791

MAILED
MAY 23 2011
OFFICE OF PETITIONS

In re Application of Sung I. Oh Application No. 12/543,502 Filed: August 18, 2009 Attorney Docket No. 52204-81	: : : : :	DECISION ON PETITION TO WITHDRAW FROM RECORD

This is a decision on the Request to Withdraw as attorney or agent of record under 37 CFR §§ 1.36(b) or 10.40 filed April 22, 2011.

The request is **NOT APPROVED**.

The request cannot be approved because the requested change in the correspondence address is improper.

The Office will no longer change the correspondence address to that of a new practitioner unless the Request is accompanied by a power of attorney to a new practitioner (*See* USPTO Form PTO/SB/82). However, the Office will only accept correspondence address changes to the most current address Information provided for the assignee of the entire interest *that properly became of record under 37 CFR 3.71*[1], or, if no assignee of the entire interest has properly been made of record, the most current address information provided for the first named inventor. Therefore, the Office cannot change the correspondence address to the address on the Request to Withdraw at this present time.

In view of the above, all future communications from the Office will continue to be directed to the above-listed address unless otherwise notified by the applicant.

Telephone inquiries concerning this decision should be directed to the undersigned at (571) 272-3226.

Andrea Smith
Petitions Examiner
Office of Petitions

cc: Abe Chavez
CLO Systems, LLC
15312 East Valley Blvd.
City of Industry, CA 91746

[1] An assignee becomes of record either in a national patent application or a reexamination proceeding by filing a statement in compliance with § 3.73(b) that is signed by a party who is authorized to act on behalf of the assignee.

PTO/SB/20PCT-KR (06-10)
Approved for use through 01/31/2012. OMB 0651-0058
U.S. Patent and Trademark Office; U. S. DEPARTMENT OF COMMERCE
Under the Paperwork Reduction Act of 1995, no persons are required to respond to a collection of information unless it displays a valid OMB control number.

REQUEST FOR PARTICIPATION IN THE PATENT COOPERATION TREATY - PATENT PROSECUTION HIGHWAY (PCT-PPH) PILOT PROGRAM BETWEEN THE KOREAN INTELLECTUAL PROPERTY OFFICE (KIPO) AND THE USPTO

Application No:	12/543,523	Filing date:	August 19, 2009
First Named Inventor:	Henry D. Rossi III		
Title of the Invention:	Dental Prosthesis Removal Tool		

THIS REQUEST FOR PARTICIPATION IN THE PCT-PPH PILOT PROGRAM ALONG WITH THE REQUIRED DOCUMENTS MUST BE SUBMITTED VIA EFS-WEB. INFORMATION REGARDING EFS-WEB IS AVAILABLE AT HTTP://WWW.USPTO.GOV/EBC/EFS_HELP.HTML

APPLICANT HEREBY REQUESTS PARTICIPATION IN THE PCT-PPH PROGRAM AND PETITIONS TO MAKE THE ABOVE-IDENTIFIED APPLICATION SPECIAL UNDER THE PCT-PPH PROGRAM.

The above-identified application is (1) a national stage entry of the corresponding PCT application, or (2) a national stage entry of another PCT application which claims priority to the corresponding PCT application, or (3) a national application that claims domestic/ foreign priority to the corresponding PCT application, or (4) a national application which forms the basis for the priority claim in the corresponding PCT application, or (5) a continuing application of a U.S. application that satisfies one of (1) to (4) above, or (6) a U.S. application that claims domestic benefit to a U.S. provisional application which forms the basis for the priority claim in the corresponding PCT application.

The corresponding PCT application number(s) is/are: PCT/US2010/044963

The international filing date of the corresponding PCT application(s) is/are: August 10, 2010

I. List of Required Documents:

a. **A copy of the latest international work product (WO/ISA, WO/IPEA, or IPER) in the above–identified corresponding PCT application(s)**

☑ Is attached.

☐ Is not attached because the document is already in the U.S. application.

b. **A copy of all claims which were indicated as having novelty, inventive step and industrial applicability in the above-identified corresponding PCT application(s).**

☑ Is attached.

☐ Is not attached because the document is already in the U.S. application.

c. **English translations of the documents in a. and b. above are attached (if the documents are not in the English language). A statement that the English translation is accurate is attached for the document in b. above.**

This collection of information is required by 35 U.S.C. 119, 37 CFR 1.55, and 37 CFR 1.102(d). The information is required to obtain or retain a benefit by the public, which is to file (and by the USPTO to process) an application. Confidentiality is governed by 35 U.S.C. 122 and 37 CFR 1.11 and 1.14. This collection is estimated to take 2 hours to complete, including gathering, preparing, and submitting the completed application form to the USPTO. Time will vary depending upon the individual case. Any comments on the amount of time you require to complete this form and/or suggestions for reducing this burden should be sent to the Chief Information Officer, U.S. Patent and Trademark Office, U.S. Department of Commerce, P.O. Box 1450, Alexandria, VA 22313-1450. DO NOT SEND FEES OR COMPLETED FORMS TO THIS ADDRESS.

Approved for use through 01/31/2012. OMB 0651-0058
U.S.Patent and Trademark Office; U.S. DEPARTMENT OF COMMERCE
Under the Paperwork Reduction Act of 1995, no persons are required to respond to a collection of information unless it displays a valid OMB control number.

REQUEST FOR PARTICIPATION IN THE PCT-PPH PILOT PROGRAM BETWEEN THE KIPO AND THE USPTO

(continued)

Application No.:	12/543,523
First Named Inventor:	Henry D. Rossi III

d. **(1) An information disclosure statement listing the documents cited in the international work products (ISR, WO/ISA, WO/IPEA, IPER) of the corresponding PCT application.**

- [✓] Is attached
- [ ] Has already been filed in the above-identified U.S. application on _____

(2) Copies of all documents (except) for U.S. patents or U.S. patent application publications)

- [ ] Are attached.
- [✓] Have already been filed in the above-identified U.S. application on May 9, 2011

II. Claims Correspondence Table:

Claims in US Application	Patentable Claims in the corresponding PCT Application	Explanation regarding the correspondence
1-10	1-10	Same
11-20	15-24	Same
21-24	11-14	Same

III. All the claims in the US application sufficiently correspond to the patentable claims in the corresponding PCT application.

Signature James A. Wilke	Date May 9, 2011
Name (Print/Typed) James A. Wilke	Registration Number 34,279

US Application No. 12/543,523

Preliminary Amendment Claims:

1. A dental prosthesis removal tool for removing both maxillary and mandibular dental prostheses of a user, said tool comprising:

a handle portion having a proximal end and a distal end;

a top portion having a proximal end and a distal end, said top portion having a head portion located at said distal end of said top portion;

a transition portion, said transition portion coupling said proximal end of said handle portion to said proximal end of said top portion; and

a beak portion extending generally laterally from said head portion, said beak portion comprising:

a maxillary dental prosthesis engaging portion located on a first side of said beak portion; and

a mandibular dental prosthesis engaging portion located on a second side of said beak portion that is opposite said first side of said beak portion; wherein said maxillary dental prosthesis engaging portion of said beak portion is configured to engage and remove a maxillary dental prosthesis and said mandibular dental prosthesis engaging portion of said beak portion is configured to engage and remove a mandibular dental prosthesis without the user reorienting the dental prosthesis relative to either a jaw or a hand of the user.

2. The dental prosthesis removal tool of Claim 1, wherein said transition portion comprises:

an arcuate depression in said transition portion defining a thumb portion configured to receive a user's thumb thereupon when said dental prosthesis removal tool is being used; and

an arcuate depression in said transition portion defining a finger portion configured to receive a user's thumb thereupon when said dental prosthesis removal tool is being used, said finger portion being on a side of said transition portion opposite said thumb portion.

3. The dental prosthesis removal tool of Claim 2, wherein said beak portion extends from the same side of said dental prosthesis removal tool on which said thumb portion is located.

4. The dental prosthesis removal tool of Claim 1, wherein said mandibular dental prosthesis engagement portion is oriented toward an end of said dental prosthesis removal tool opposite said distal end of said handle portion.

5. The dental prosthesis removal tool of Claim 1, wherein said mandibular dental prosthesis engagement portion is curved generally concave to define a hooked shape on said beak portion that is well-suited to engage a mandibular denture.

6. The dental prosthesis removal tool of Claim 1, wherein said maxillary dental prosthesis engagement portion is oriented toward an end of said dental prosthesis removal tool at which said distal end of said handle portion is located.

7. The dental prosthesis removal tool of Claim 1, wherein said maxillary dental prosthesis engagement portion is curved generally concave to engage a maxillary denture.

8. The dental prosthesis removal tool of Claim 1, wherein the dental prosthesis tool is made of injection molded plastic material.

9. The dental prosthesis removal tool of Claim 1, additionally comprising: a toothbrush located adjacent said distal end of said handle portion.

10. The dental prosthesis removal tool of Claim 1, additionally comprising: a rubber tip stimulator located adjacent said distal end of said handle portion.

11. A dental prosthesis removal tool for removing both maxillary and mandibular dental prostheses of a user, said tool comprising:

a graspable member having a proximal end and a distal end, said member being graspable by a user proximate said proximal end;

a beak portion extending generally laterally from said distal end of said graspable member, said beak portion comprising:

a maxillary dental prosthesis engaging portion located on a first side of said beak portion; and

a mandibular dental prosthesis engaging portion located on a second side of said beak portion that is opposite said first side of said beak portion;
wherein said maxillary dental prosthesis engaging portion of said beak portion is configured to engage and remove a maxillary dental prosthesis and said mandibular dental prosthesis engaging portion of said beak portion is configured to engage and remove a mandibular dental prosthesis.

12. A method of making a dental prosthesis removal tool comprising:

providing a member having a handle portion at a first end thereof, a top portion at a second opposite end thereof, and a transition portion located intermediate said handle portion and said top portion, said top portion having a head portion located at and end of said top portion distal from said transition portion;

providing said head portion with a beak portion extending generally laterally from said head portion, said beak portion comprising a maxillary dental prosthesis engaging portion located on a first side of said beak portion and a mandibular dental prosthesis engaging portion located on a second side of said beak portion that is opposite said first side of said beak portion;
wherein said maxillary dental prosthesis engaging portion of said beak portion is configured to engage and remove a the maxillary dental prosthesis and said mandibular dental prosthesis engaging portion of said beak portion is configured

to engage and remove a mandibular dental prosthesis without the user reorienting the dental prosthesis relative to either a jaw or a hand of the user.

13. The method of making a dental prosthesis removal tool of Claim 12, wherein the dental prosthesis tool provided is made of injection molded plastic material.

14. The method of making a dental prosthesis removal tool of Claim 12, further comprising:

coupling a toothbrush to said handle portion.

15. The method of making a dental prosthesis removal tool of Claim 12, further comprising:

coupling a rubber tip stimulator to said handle portion.

16. A method of removing at least one of a maxillary dental prosthesis and a mandibular dental prosthesis comprising:

providing a member having a handle portion at a first end thereof, a top portion at a second opposite end thereof, and a transition portion located intermediate said handle portion and said top portion, said top portion having a head portion located at and end of said top portion distal from said transition portion;

providing said head portion with a beak portion extending generally laterally from said head portion, said beak portion comprising a maxillary dental prosthesis engaging portion located on a first side of said beak portion and a mandibular dental prosthesis engaging portion located on a second side of said beak portion that is opposite said first side of said beak portion;

if a maxillary dental prosthesis is to be removed, removing the maxillary dental prosthesis by engaging the maxillary dental prosthesis with the maxillary dental prosthesis engaging portion on said beak portion and removing the

maxillary dental prosthesis by pulling said handle downwardly away from the maxillary jaw;

if a mandibular dental prosthesis is to be removed, removing the mandibular dental prosthesis by engaging the mandibular dental prosthesis with the mandibular dental prosthesis engaging portion on said beak portion and removing the mandibular dental prosthesis by pushing said handle upwardly away from the mandibular jaw;

wherein said beak portion is configured to engage and remove both the maxillary dental prosthesis and the mandibular dental prosthesis without the user reorienting the dental prosthesis relative to either a jaw or a hand of the user.

17. The method of removing a maxillary dental prosthesis and a mandibular dental prosthesis of Claim 16, wherein the dental prosthesis tool is made of injection molded plastic material.

18. The method of removing a maxillary dental prosthesis and a mandibular dental prosthesis of Claim 16, wherein said handle portion further comprises a toothbrush located adjacent said distal end of said handle portion.

19. The method of removing a maxillary dental prosthesis and a mandibular dental prosthesis of Claim 16, wherein said handle portion further comprises a rubber tip stimulator located adjacent said distal end of said handle portion.

20. The method of removing a maxillary dental prosthesis and a mandibular dental prosthesis of Claim 16, wherein at least one of the dental prostheses is an overdenture, retained by a snap-fit to a snap anchor.

21. The dental prosthesis removal tool of Claim 1, wherein said transition portion is mounted to said handle portion at an angle.

22. The dental prosthesis removal tool of Claim 21, wherein said transition portion is mounted to said handle portion at an angle of between approximately ten and thirty-five degrees.

23. The dental prosthesis removal tool of Claim 1, wherein said handle portion is contoured to accommodate a user's curled fingers and thumb to provide a comfortable grip for the user's fingers and thumb, wherein said dental prosthesis removal tool may be manipulated either by a user to remove the user's dental prosthesis or for a user to remove a dental prosthesis from another individual.

24. The dental prosthesis removal tool of Claim 1, wherein said transition portion is between approximately two and four inches long.

PCT Application No. PCT/US2010/044963

PCT Claims

1. A dental prosthesis removal tool for removing both maxillary and mandibular dental prostheses of a user, said tool comprising:

a handle portion having a proximal end and a distal end;

a top portion having a proximal end and a distal end, said top portion having a head portion located at said distal end of said top portion;

a transition portion, said transition portion coupling said proximal end of said handle portion to said proximal end of said top portion; and

a beak portion extending generally laterally from said head portion, said beak portion comprising:

a maxillary dental prosthesis engaging portion located on a first side of said beak portion; and

a mandibular dental prosthesis engaging portion located on a second side of said beak portion that is opposite said first side of said beak portion;

wherein said maxillary dental prosthesis engaging portion of said beak portion is configured to engage and remove a maxillary dental prosthesis and said mandibular dental prosthesis engaging portion of said beak portion is configured to engage and remove a mandibular dental prosthesis without the user reorienting the dental prosthesis relative to either a jaw or a hand of the user.

2. The dental prosthesis removal tool of Claim 1, wherein said transition portion comprises:

an arcuate depression in said transition portion defining a thumb portion configured to receive a user's thumb thereupon when said dental prosthesis removal tool is being used; and

an arcuate depression in said transition portion defining a finger portion configured to receive a user's thumb thereupon when said dental prosthesis removal tool is being used, said finger portion being on a side of said transition portion opposite said thumb portion.

3. The dental prosthesis removal tool of Claim 2, wherein said beak portion extends from the same side of said dental prosthesis removal tool on which said thumb portion is located.

4. The dental prosthesis removal tool of Claim 1, wherein said mandibular dental prosthesis engagement portion is oriented toward an end of said dental prosthesis removal tool opposite said distal end of said handle portion.

5. The dental prosthesis removal tool of Claim 1, wherein said mandibular dental prosthesis engagement portion is curved generally concave to define a hooked shape on said beak portion that is well-suited to engage a manibular denture.

6. The dental prosthesis removal tool of Claim 1, wherein said maxillary dental prosthesis engagement portion is oriented toward an end of said dental prosthesis removal tool at which said distal end of said handle portion is located.

7. The dental prosthesis removal tool of Claim 1, wherein said maxillary dental prosthesis engagement portion is curved generally concave to engage a maxillary denture.

8. The dental prosthesis removal tool of Claim 1, wherein the dental prosthesis tool is made of injection molded plastic material.

9. The dental prosthesis removal tool of Claim 1, additionally comprising:
a toothbrush located adjacent said distal end of said handle portion.

10. The dental prosthesis removal tool of Claim 1, additionally comprising:
a rubber tip stimulator located adjacent said distal end of said handle portion.

11. The dental prosthesis removal tool of Claim 1, wherein said transition portion is mounted to said handle portion at an angle.

12. The dental prosthesis removal tool of Claim 11, wherein said transition portion is mounted to said handle portion at an angle of between approximately ten and thirty-five degrees.

13. The dental prosthesis removal tool of Claim 1, wherein said handle portion is contoured to accommodate a user's curled fingers and thumb to provide a comfortable grip for the user's fingers and thumb, wherein said dental prosthesis removal tool may be manipulated either by a user to remove the user's dental prosthesis or for a user to remove a dental prosthesis from another individual.

14. The dental prosthesis removal tool of Claim 1, wherein said transition portion is between approximately two and four inches long.

15. A dental prosthesis removal tool for removing both maxillary and mandibular dental prostheses of a user, said tool comprising:

a graspable member having a proximal end and a distal end, said member being graspable by a user proximate said proximal end;

a beak portion extending generally laterally from said distal end of said graspable member, said beak portion comprising:

a maxillary dental prosthesis engaging portion located on a first side of said beak portion; and

a mandibular dental prosthesis engaging portion located on a second side of said beak portion that is opposite said first side of said beak portion;

wherein said maxillary dental prosthesis engaging portion of said beak portion is configured to engage and remove a maxillary dental prosthesis and said mandibular dental prosthesis engaging portion of said beak portion is configured to engage and remove a mandibular dental prosthesis.

16. A method of making a dental prosthesis removal tool comprising:

providing a member having a handle portion at a first end thereof, a top portion at a second opposite end thereof, and a transition portion located intermediate said handle portion and said top portion, said top portion having a head portion located at and end of said top portion distal from said transition portion;

providing said head portion with a beak portion extending generally laterally from said head portion, said beak portion comprising a maxillary dental prosthesis engaging portion located on a first side of said beak portion and a mandibular dental prosthesis engaging portion located on a second side of said beak portion that is opposite said first side of said beak portion;

wherein said maxillary dental prosthesis engaging portion of said beak portion is configured to engage and remove a the maxillary dental prosthesis and said mandibular dental prosthesis engaging portion of said beak portion is configured to engage and remove a mandibular dental prosthesis without the user reorienting the dental prosthesis relative to either a jaw or a hand of the user.

17. The method of making a dental prosthesis removal tool of Claim 16, wherein the dental prosthesis tool provided is made of injection molded plastic material.

18. The method of making a dental prosthesis removal tool of Claim 16, further comprising:

coupling a toothbrush to said handle portion.

19. The method of making a dental prosthesis removal tool of Claim 16, further comprising:

coupling a rubber tip stimulator to said handle portion.

20. A method of removing at least one of a maxillary dental prosthesis and a mandibular dental prosthesis comprising:

providing a member having a handle portion at a first end thereof, a top portion at a second opposite end thereof, and a transition portion located intermediate said handle portion and said top portion, said top portion having a head portion located at and end of said top portion distal from said transition portion;

providing said head portion with a beak portion extending generally laterally from said head portion, said beak portion comprising a maxillary dental prosthesis engaging portion located on a first side of said beak portion and a mandibular dental prosthesis engaging portion located on a second side of said beak portion that is opposite said first side of said beak portion;

if a maxillary dental prosthesis is to be removed, removing the maxillary dental prosthesis by engaging the maxillary dental prosthesis with the maxillary dental prosthesis engaging portion on said beak portion and removing the maxillary dental prosthesis by pulling said handle downwardly away from the maxillary jaw;

if a mandibular dental prosthesis is to be removed, removing the mandibular dental prosthesis by engaging the mandibular dental prosthesis with the mandibular dental prosthesis engaging portion on said beak portion and removing the mandibular dental prosthesis by pushing said handle upwardly away from the mandibular jaw;

wherein said beak portion is configured to engage and remove both the maxillary dental prosthesis and the mandibular dental prosthesis without the user reorienting the dental prosthesis relative to either a jaw or a hand of the user.

21. The method of removing a maxillary dental prosthesis and a mandibular dental prosthesis of Claim 20, wherein the dental prosthesis tool is made of injection molded plastic material.

22. The method of removing a maxillary dental prosthesis and a mandibular dental prosthesis of Claim 20, wherein said handle portion further comprises a toothbrush located adjacent said distal end of said handle portion.

23. The method of removing a maxillary dental prosthesis and a mandibular dental prosthesis of Claim 20, wherein said handle portion further comprises a rubber tip stimulator located adjacent said distal end of said handle portion.

24. The method of removing a maxillary dental prosthesis and a mandibular dental prosthesis of Claim 20, wherein at least one of the dental prostheses is an overdenture, retained by a snap-fit to a snap anchor.

PCT/US2010/044963

RECEIVED MAY 02 2011 Reinhart Boerner Van Deuren s.c

PATENT COOPERATION TREATY

From the INTERNATIONAL SEARCHING AUTHORITY

To:

MILLER LESLIE S.

REINHART BOERNER VAN DEUREN S.C. ATTN: LINDA KASULKE, DOCKET CLERK 1000 NORTH WATER STREET MILWAUKEE WI 53202 USA

PCT

NOTIFICATION OF TRANSMITTAL OF THE INTERNATIONAL SEARCH REPORT AND THE WRITTEN OPINION OF THE INTERNATIONAL SEARCHING AUTHORITY, OR THE DECLARATION

(PCT Rule 44.1)

	Date of mailing *(day/month/year)* 26 APRIL 2011 (26.04.2011)
Applicant's or agent's file reference 10784-PCT	**FOR FURTHER ACTION** See paragraphs 1 and 4 below
International application No. **PCT/US2010/044963**	International filing date *(day/month/year)* **10 AUGUST 2010 (10.08.2010)**
Applicant **HENRY D. ROSSI III**	

1. ☒ The applicant is hereby notified that the international search report and the written opinion of the International Searching Authority have been established and are transmitted herewith.
   Filing of amendments and statement under Article 19:
   The applicant is entitled, if he so wishes, to amend the claims of the international application (see Rule 46):
   When? The time limit for filing such amendments is normally two months from the date of transmittal of the international search report.
   Where? Directly to the International Bureau of WIPO, 34 chemin des Colombettes 1211 Geneva 20, Switzerland, Facsimile No.: +41 22 338 82 70
   For more detailed instructions, see *PCT Applicant's Guide*, International Phase, paragraphs 9.004 . 9.011.

2. ☐ The applicant is hereby notified that no international search report will be established and that the declaration under Article 17(2)(a) to that effect and the written opinion of the International Searching Authority are transmitted herewith.

3. ☐ **With regard to any protest** against payment of (an) additional fee(s) under Rule 40.2, the applicant is notified that:
   ☐ the protest together with the decision thereon has been transmitted to the International Bureau together with any request to forward the texts of both the protest and the decision thereon to the designated Offices.
   ☐ no decision has been made yet on the protest; the applicant will be notified as soon as a decision is made.

4. **Reminders**
   The applicant may submit comments on an informal basis on the written opinion of the International Searching Authority to the International Bureau. The International Bureau will send a copy of such comments to all designated Offices unless an international preliminary examination report has been or is to be established. Following the expiration of 30 months from the priority date, these comments will also be made available to the public.

   Shortly after the expiration of **18 months** from the priority date, the international application will be published by the International Bureau. If the applicant wishes to avoid or postpone publication, a notice of withdrawal of the international application, or of the priority claim, must reach the International Bureau before the completion of the technical preparations for international publication (Rules 90bis.1 and 90bis.3).

   Within **19 months** from the priority date, but only in respect of some designated Offices, a demand for international preliminary examination must be filed if the applicant wishes to postpone the entry into the national phase **until 30 months** from the priority date (in some Offices even later); otherwise, the applicant must, **within 20 months** from the priority date, perform the prescribed acts for entry into the national phase before those designated Offices.
   In respect of other designated Offices, the time limit of **30 months** (or later) will apply even if no demand is filed within 19months.

   For details about the applicable time limits, Office by Office, see www.wipo.int/pct/en/texts/time_limits.html and the PCT Applicant's Guide, National Chapters.

Name and mailing address of the ISA/KR Korean Intellectual Property Office Government Complex-Daejeon, 189 Cheongsa-ro, Seo-gu, Daejeon 302-701, Republic of Korea Facsimile No. 82-42-472-7140	Authorized officer COMMISSIONER Telephone No. 82-42-481-8755

* Attention

Copies of the documents cited in the international search report can be searched in the following Korean Intellectual Property Office English website for three months from the date of mailing of the international search report.

http://www.kipo.go.kr/en/ => PCT Services => PCT Services

ID : PCT international application number
PW : **MUTNXYNX**

Inquiries related to PCT International Search Report or Written Opinion prepared by KIPO as an International Searching Authority can be answered not only by KIPO but also through IPKC (Intellectual Property Korea Center), located in Vienna, VA, which functions as a PCT Help Desk for PCT applicants.

Homepage: http://www.ipkcenter.com
Email: ipkc@ipkcenter.com
Phone: +1 703 388 1066
Fax: +1 703 388 1084

PATENT COOPERATION TREATY

PCT

INTERNATIONAL SEARCH REPORT

(PCT Article 18 and Rules 43 and 44)

Applicant's or agent's file reference 10784-PCT	**FOR FURTHER ACTION**	see Form PCT/ISA/220 as well as, where applicable, item 5 below.
International application No. **PCT/US2010/044963**	International filing date *(day/month/year)* **10 AUGUST 2010 (10.08.2010)**	(Earliest) Priority Date *(day/month/year)* 19 AUGUST 2009 (19.08.2009)
Applicant **HENRY D. ROSSI III**		

This International search report has been prepared by this International Searching Authority and is transmitted to the applicant according to Article 18. A copy is being transmitted to the International Bureau.

This international search report consists of a total of 3 sheets.

☐ It is also accompanied by a copy of each prior art document cited in this report.

1. **Basis of the report**
   a. With regard to the **language**, the international search was carried out on the basis of:
      ☒ the international application in the language in which it was filed
      ☐ a translation of the international application into _____, which is the language of a translation furnished for the purposes of international search (Rules 12.3(a) and 23.1(b))
   b. ☐ This international search report has been established taking into account the **rectification of an obvious mistake** authorized by or notified to this Authority under Rule 91 (Rule 43.6*bis*(a)).
   c. ☐ With regard to any **nucleotide and/or amino acid sequence** disclosed in the international application, see Box No. I.
2. ☐ **Certain claims were found unsearchable** (See Box No. II)
3. ☐ **Unity of invention is lacking** (See Box No. III)
4. With regard to the **title,**
   ☒ the text is approved as submitted by the applicant.
   ☐ the text has been established by this Authority to read as follows:
5. With regard to the **abstract,**
   ☒ the text is approved as submitted by the applicant.
   ☐ the text has been established, according to Rule 38.2, by this Authority as it appears in Box No. IV. The applicant may, within one month from the date of mailing of this international search report, submit comments to this Authority.
6. With regard to the drawings,
   a. the figure of the **drawings** to be published with the abstract is Figure No. 17
      ☒ as suggested by the applicant.
      ☐ as selected by this Authority, because the applicant failed to suggest a figure.
      ☐ as selected by this Authority, because this figure better characterizes the invention.
   b. ☐ none of the figure is to be published with the abstract.

INTERNATIONAL SEARCH REPORT

International application No.
PCT/US2010/044963

A. CLASSIFICATION OF SUBJECT MATTER

A61C 13/38(2006.01)i, A61C 17/00(2006.01)i, A61C 19/00(2006.01)i

According to International Patent Classification (IPC) or to both national classification and IPC

B. FIELDS SEARCHED

Minimum documentation searched (classification system followed by classification symbols)
A61C 13/38; A61C 17/04; A61C 3/06; A61C 3/16; A61C 3/00

Documentation searched other than minimum documentation to the extent that such documents are included in the fields searched
Korean utility models and applications for utility models
Japanese utility models and applications for utility models

Electronic data base consulted during the international search (name of data base and, where practicable, search terms used)
eKOMPASS(KIPO internal) & Keywords: dental prosthesis removal tool, denture remove

C. DOCUMENTS CONSIDERED TO BE RELEVANT

Category*	Citation of document, with indication, where appropriate, of the relevant passages	Relevant to claim No.
A	KR 10-0289867 B1 (KANG CHA WON) 15 May 2001 See abstract, figures 1-5, and claims 1-2	1-24
A	US 7011517 B2 (JONATHAN L. NICOZISIS) 14 March 2006 See abstract, figures 2-5, and claims 1-15	1-24
A	US 7381054 B1 (MICHIKO TAIRA POLANOWSKI) 03 June 2008 See abstract, figures 1-6, and claims 1-3	1-24
A	US 04274826A A (ELBERT P. HUEY et al.) 23 June 1981 See abstract, figure 1, and claims 1-2	1-24

☐ Further documents are listed in the continuation of Box C. ☒ See patent family annex.

* Special categories of cited documents:
"A" document defining the general state of the art which is not considered to be of particular relevance
"E" earlier application or patent but published on or after the international filing date
"L" document which may throw doubts on priority claim(s) or which is cited to establish the publication date of citation or other special reason (as specified)
"O" document referring to an oral disclosure, use, exhibition or other means
"P" document published prior to the international filing date but later than the priority date claimed
"T" later document published after the international filing date or priority date and not in conflict with the application but cited to understand the principle or theory underlying the invention
"X" document of particular relevance; the claimed invention cannot be considered novel or cannot be considered to involve an inventive step when the document is taken alone
"Y" document of particular relevance; the claimed invention cannot be considered to involve an inventive step when the document is combined with one or more other such documents,such combination being obvious to a person skilled in the art
"&" document member of the same patent family

Date of the actual completion of the international search	Date of mailing of the international search report
25 APRIL 2011 (25.04.2011)	**26 APRIL 2011 (26.04.2011)**
Name and mailing address of the ISA/KR Korean Intellectual Property Office Government Complex-Daejeon, 189 Cheongsa-ro, Seo-gu, Daejeon 302-701, Republic of Korea Facsimile No. 82-42-472-7140	Authorized officer LEE, Jun Seok Telephone No. 82-42-481-8400

INTERNATIONAL SEARCH REPORT
Information on patent family members

International application No.
PCT/US2010/044963

Patent document cited in search report	Publication date	Patent family member(s)	Publication date
KR 10-0289867 B1	15.05.2001	None	
US 7011517 B2	14.03.2006	US 2005-064358 A1	24.03.2005
US 7381054 B1	03.06.2008	None	
US 04274826A A	23.06.1981	None	

PATENT COOPERATION TREATY

From the
INTERNATIONAL SEARCHING AUTHORITY

To:
MILLER LESLIE S.

REINHART BOERNER VAN DEUREN S.C. ATTN: LINDA KASULKE, DOCKET CLERK 1000 NORTH WATER STREET MILWAUKEE WI 53202 USA

PCT

WRITTEN OPINION OF THE INTERNATIONAL SEARCHING AUTHORITY

(PCT Rule 43bis.1)

Date of mailing *(day/month/year)*	**26 APRIL 2011 (26.04.2011)**
Applicant's or agent's file reference 10784-PCT	**FOR FURTHER ACTION** See paragraph 2 below

International application No.	International filing date *(day/month/year)*	Priority date *(day/month/year)*
PCT/US2010/044963	**10 AUGUST 2010 (10.08.2010)**	19 AUGUST 2009 (19.08.2009)

International Patent Classification (IPC) or both national classification and IPC

A61C 13/38(2006.01)i, A61C 17/00(2006.01)i, A61C 19/00(2006.01)i

Applicant

HENRY D. ROSSI III

1. This opinion contains indications relating to the following items:

- [x] Box No. I Basis of the opinion
- [ ] Box No. II Priority
- [ ] Box No. III Non-establishment of opinion with regard to novelty, inventive step and industrial applicability
- [ ] Box No. IV Lack of unity of invention
- [x] Box No. V Reasoned statement under Rule 43bis.1(a)(i) with regard to novelty, inventive step or industrial applicability; citations and explanations supporting such statement
- [ ] Box No. VI Certain documents cited
- [ ] Box No. VII Certain defects in the international application
- [ ] Box No. VIII Certain observations on the international application

2. **FURTHER ACTION**
If a demand for international preliminary examination is made, this opinion will be considered to be a written opinion of the International Preliminary Examining Authority ("IPEA") except that this does not apply where the applicant chooses an Authority other than this one to be the IPEA and the chosen IPEA has notified the International Bureau under Rule 66.1bis(b) that written opinions of this International Searching Authority will not be so considered.

If this opinion is, as provided above, considered to be a written opinion of the IPEA, the applicant is invited to submit to the IPEA a written reply together, where appropriate, with amendments, before the expiration of 3 months from the date of mailing of Form PCT/ISA/220 or before the expiration of 22 months from the priority date, whichever expires later.
For further options, see Form PCT/ISA/220.

3. For further details, see notes to Form PCT/ISA/220.

Name and mailing address of the ISA/KR	Date of completion of this opinion	Authorized officer
Korean Intellectual Property Office Government Complex-Daejeon, 189 Cheongsa-ro, Seo-gu, Daejeon 302-701, Republic of Korea Facsimile No. 82-42-472-7140	25 APRIL 2011 (25.04.2011)	LEE, Jun Seok Telephone No.82-42-481-8400

WRITTEN OPINION OF THE INTERNATIONAL SEARCHING AUTHORITY

International application No.
PCT/US2010/044963

Box No. I Basis of this opinion

1. With regard to the **language**, this opinion has been established on the basis of:

   ☒ the international application in the language in which it was filed

   ☐ a translation of the international application into _____, which is the language of a translation furnished for the purposes of international search (Rules 12.3(a) and 23.1(b))

2. ☐ This opinion has been established taking into account the **rectification of an obvious mistake** authorized by or notified to this Authority under Rule 91 (Rule 43*bis*.1(a))

3. With regard to any **nucleotide and/or amino acid sequence** disclosed in the international application, this opinion has been established on the basis of:

   a. a sequence listing filed or furnished
      ☐ on paper
      ☐ in electronic form

   b. time of filing or furnishing
      ☐ contained in the international application as filed.
      ☐ filed together with the international application in electronic form.
      ☐ furnished subsequently to this Authority for the purposes of search.

4. ☐ In addition, in the case that more than one version or copy of a sequence listing has been filed or furnished, the required statements that the information in the subsequent or additioanl copies is identical to that in the application as filed or does not go beyond the application as filed, as appropriate, were furnished.

5. Additional comments:

WRITTEN OPINION OF THE INTERNATIONAL SEARCHING AUTHORITY

International application No.
PCT/US2010/044963

Box No. V Reasoned statement under Rule 43bis.1(a)(i) with regard to novelty, inventive step or industrial applicability; citations and explanations supporting such statement

1. Statement

Novelty (N)	Claims	1-24	YES
	Claims	NONE	NO
Inventive step (IS)	Claims	1-24	YES
	Claims	NONE	NO
Industrial applicability (IA)	Claims	1-24	YES
	Claims	NONE	NO

2. Citations and explanations :

Reference is made to the following documents:

D1: KR 10-0289867 B1 (KANG CHA WON) 15 May 2001
D2: US 7011517 B2 (JONATHAN L. NICOZISIS) 14 March 2006
D3: US 7381054 B1 (MICHIKO TAIRA POLANOWSKI) 03 June 2008
D4: US 04274826A A (ELBERT P. HUEY et al.) 23 June 1981

1. Novelty(N) and Invnetive Step(IS)

Claim 1 relates to a dental prosthesis removal tool for removing both maillary and mandibular dental prostheses of a user, which comprises a handle portion, a top portion, a transition portion, and a beak portion. However, none of the documents D1-D4 disclose technical features of claims 1. Moreover, the technical features of claim 1 are not obvious to a person skilled in the art.

Claims 15, 16 and 20 relate to a dental prosthesis removal tool, a method of making a dental prosthesis removal tool and a method of removing at least one of a maxillary dental prosthesis and a mandibular dental prosthesis, which substantially include the technical features of claim 1.

Claims 2-14, 17-19, and 21-24 are dependent on claims 1, 16, and 20 respectively.

Therefore, claims 1-24 of the present invention are novel and involve an inventive step under PCT Article 33(2) and (3).

2. Industrial Applicability(IA)

Claims 1-24 are industrially applicable under PCT Article 33(4).

UNITED STATES PATENT AND TRADEMARK OFFICE

UNITED STATES DEPARTMENT OF COMMERCE
United States Patent and Trademark Office
Address: COMMISSIONER FOR PATENTS
P.O. Box 1450
Alexandria, Virginia 22313-1450
www.uspto.gov

APPLICATION NO.	FILING DATE	FIRST NAMED INVENTOR	ATTORNEY DOCKET NO.	CONFIRMATION NO.
12/543,523	08/19/2009	Henry D. Rossi III	10784	7526

22922 7590 05/12/2011
REINHART BOERNER VAN DEUREN S.C.
ATTN: LINDA KASULKE, DOCKET COORDINATOR
1000 NORTH WATER STREET
SUITE 2100
MILWAUKEE, WI 53202

EXAMINER
ROSEN, ERIC J

ART UNIT	PAPER NUMBER
3732	

NOTIFICATION DATE	DELIVERY MODE
05/12/2011	ELECTRONIC

Please find below and/or attached an Office communication concerning this application or proceeding.

The time period for reply, if any, is set in the attached communication.

Notice of the Office communication was sent electronically on above-indicated "Notification Date" to the following e-mail address(es):

IPAdmin@reinhartlaw.com

UNITED STATES PATENT AND TRADEMARK OFFICE

Commissioner for Patents
United States Patent and Trademark Office
P.O. Box 1450
Alexandria, VA 22313-1450
www.uspto.gov

REINHART BOERNER VAN DEUREN S.C.
ATTN: LINDA KASULKE, DOCKET COORDINATOR
1000 NORTH WATER STREET
SUITE 2100
MILWAUKEE WI 53202

In re Application of	:
ROSSI, HENRY D. III	: DECISION ON REQUEST TO
Application No. 12/543,523	: PARTICIPATE IN PATENT
Filed: Aug. 19, 2009	: PCT/PROSECUTION HIGHWAY
Attorney Docket No. 10784	: PROGRAM AND PETITION
Title: DENTAL PROSTHESIS REMOVAL TOOL	: TO MAKE SPECIAL UNDER
	: 37 CFR 1.102(a)

This is a decision on the request to participate in the Patent Prosecution Highway (PPH) program and the petition under 37 CFR 1.102(a), filed May 9, 2011, to make the above-identified application special.

The request and petition are granted.

A grantable request to participate in the PPH program and petition to make special require:
(1) The U.S. application must disclose an eligible relationship to one or more PCT applications filed in the KIPO, JPO, EPO or USPTO;
(2) Applicant must submit a copy of the allowable/patentable claim(s) from the PCT application(s) latest international work product (the written opinion or the IPER) along with an English translation thereof and a statement that the English translation is accurate;
(3) All the claims in the U.S. application must sufficiently correspond or be amended to sufficiently correspond to the allowable/patentable claim(s) in the PCT application(s);
(4) Examination of the U.S. application has not begun;
(5) Applicant must submit a copy of the latest international work product from the PCT application containing the allowable/patentable claim(s) along with an English translation thereof and a statement that the English translation is accurate; and
(6) Applicant must submit an IDS listing the documents cited by the PCT examiner in the international work product along with copies of documents except U.S. patents or U.S. patent application publications.

In light of the petition being properly submitted, the request to participate in the PPH program and the petition comply with the above requirements. Accordingly, the above-identified application has been accorded "special" status.

The applicant is encouraged to cite and submit all relevant prior art references, if any, to facilitate examination in this application.

Other inquiries concerning the examination or status of the application should be directed to Cris Rodriguez, the SPE of Art Unit 3732 at 571-272-4964 for Class 433/141 and also accessible in the PAIR system at http://www.uspto.gov/ebc.index.html.

All other inquiries concerning the examination or status of the application should be directed to the Patent Application Information Retrieval (PAIR) system.

This application will be forwarded and docketed to an examiner for action on the merits commensurate with this decision.

Telephone inquiries concerning this decision should be directed to Henry C. Yuen, at 571-272-4856.

The petition is **granted.**

/Henry C. Yuen/

Henry C. Yuen, Special Programs Examiner
Technology Center 3700 – Mechanical Engineering,
Manufacturing and Products
571-272-4856

UNITED STATES PATENT AND TRADEMARK OFFICE

Commissioner for Patents
United States Patent and Trademark Office
P.O. Box 1450
Alexandria, VA 22313-1450
www.uspto.gov

TIM COOK
P.O. BOX 10107
LIBERTY TX 77575

MAILED
APR 11 2011
OFFICE OF PETITIONS

In re Application of	:	
Michael D. Klanke	:	DECISION ON PETITION
Application No. 12/543,556	:	TO WITHDRAW
Filed: August 19, 2009	:	FROM RECORD
Attorney Docket No. **KLAN.07**	:	

This is a decision on the request to withdraw as attorney of record under 37 CFR § 1.36(b), filed March 14, 2011.

The request is **NOT APPROVED**.

The request cannot be approved because the attorney cannot withdraw attorneys' by Customer Number when the power of attorney was originally granted individually in the Declaration and Power of Attorney filed August 19, 2009.

All future communications from the Office will continue to be directed to the above-listed address until otherwise notified by applicant.

Telephone inquires concerning this decision should be directed to the undersigned at (571) 272-4584.

/JoAnne Burke/
JoAnne Burke
Petitions Examiner
Office of Petitions

UNITED STATES PATENT AND TRADEMARK OFFICE

Commissioner for Patents
United States Patent and Trademark Office
P.O. Box 1450
Alexandria, VA 22313-1450
www.uspto.gov

TIM COOK
P.O. BOX 10107
LIBERTY TX 77575

MAILED

JUN 02 2011

OFFICE OF PETITIONS

In re Application of	:	
Michael D. Klanke	:	
Application No. 12/543,556	:	DECISION ON PETITION
Filed: August 19, 2009	:	TO WITHDRAW
Attorney Docket No. **KLAN.07**	:	FROM RECORD
	:	

This is a decision on the Request to Withdraw as attorney or agent of record under 37 CFR § 1.36(b), filed April 13, 2011.

The request is **NOT APPROVED**.

A review of the Office record indicates that there is a discrepancy in the request as submitted in that the registration number 32,561 does not match the name "Tim Cook" listed thereon. Although petitioner was appointed as an attorney in the Declaration and Power of Attorney filed on August 19, 2009, with the name of "Tim Cook" and registration number 32,561, the Patent and Trademark Office records do not show that the registration number as being associated with the name "Tim Cook." In view of this discrepancy, the request for withdrawal as attorney can not be approved at this time.

All future communications from the Office will continue to be directed to the address of record until otherwise properly notified by the applicant.

Telephone inquires concerning this decision should be directed to the undersigned at 571-272-4584.

JoAnne Burke
Petitions Examiner
Office of Petitions

UNITED STATES PATENT AND TRADEMARK OFFICE

Commissioner for Patents
United States Patent and Trademark Office
P.O. Box 1450
Alexandria, VA 22313-1450
www.uspto.gov

TIM COOK
P.O. BOX 10107
LIBERTY TX 77575

MAILED
JUN 14 2011
OFFICE OF PETITIONS

In re Application of	:	
Michael D. Klanke	:	
Application No. 12/543,556	:	DECISION ON PETITION
Filed: August 19, 2009	:	TO WITHDRAW
Attorney Docket No. **KLAN.07**	:	FROM RECORD
	:	

This is a decision on the renewed Request to Withdraw as attorney or agent of record under 37 CFR § 1.36(b), filed June 4, 2011.

The request is **APPROVED**.

A grantable request to withdraw as attorney/agent of record must be signed by every attorney/agent seeking to withdraw or contain a clear indication that one attorney is signing on behalf of another/others. The Office requires the practitioner(s) requesting withdrawal to certify that he, she, or they have: (1) given reasonable notice to the client, prior to the expiration of the response period, that the practitioner(s) intends to withdraw from employment; (2) delivered to the client or a duly authorized representative of the client all papers and property (including funds) to which the client is entitled; and (3) notified the client of any responses that may be due and the time frame within which the client must respond , pursuant to 37 CFR 10.40.

The request was signed by Robert T. Cook on behalf of all attorneys of record who are associated with the above-identified application.

All attorneys/agents associated with the above-identified application have been withdrawn.

Applicant is reminded that there is no attorney of record at this time.

All future correspondence will be directed to the first named inventor Michael D. Klanke at the address list listed in the request.

There is no outstanding Office action mailed that requires a reply from the applicant.

Telephone inquiries concerning this decision should be directed to the undersigned at 571-272-4584.

JoAnne Burke
Petitions Examiner
Office of Petitions

cc: Michael D. Klanke
21715 Parkbend
Katy, TX 77450

UNITED STATES PATENT AND TRADEMARK OFFICE

Commissioner for Patents
United States Patent and Trademark Office
P.O. Box 1450
Alexandria, VA 22313-1450
www.uspto.gov

WOLF GREENFIELD & SACKS, P.C.
600 ATLANTIC AVENUE
BOSTON MA 02210-2206

MAILED

MAR 01 2012

OFFICE OF PETITIONS

In Re application of
Tomohiro Ito et al.
Application No. 12/543,687
Filed: August 19, 2009
Attorney Docket No. S1459.70636US00

ON PETITION

This is a decision on the Request to Cancel, filed December 29, 2011.

The request is **granted**.

Petitioner requests that documents filed on December 20, 2011, associated with EFS ID 11661328, be expunged from the record. Petitioner states that the documents were erroneously filed in the instant application as they were meant to be filed in a different application.

The information in question has been determined by the undersigned to not be material to the examination of the instant application. The information was clearly intended to be filed in a different application.

All papers associated with EFS ID 11661328, filed December 20, 2011, have been removed from the official file.

In accordance with MPEP 724.05(III), no petition is needed since the papers in question were clearly identified for a different application.

Telephone inquiries relative to this decision should be directed to Carl Friedman at (571) 272-6842.

Carl Friedman
Petitions Examiner
Office of Petitions

Doc Code: PET.AUTO **Document Description: Petition automatically granted by EFS-Web**	PTO/SB/83 U.S. Patent and Trademark Office Department of Commerce

Electronic Petition Request	**REQUEST FOR WITHDRAWAL AS ATTORNEY OR AGENT AND CHANGE OF CORRESPONDENCE ADDRESS**
Application Number	12543790
Filing Date	19-Aug-2009
First Named Inventor	Mark McHenry
Art Unit	2618
Examiner Name	DAVID BILODEAU
Attorney Docket Number	027484-001240US
Title	Method and System for Dynamic Spectrum Access Using Specialty Detectors and Improved Networking

◉ Please withdraw me as attorney or agent for the above identified patent application and the practitioners of record associated with Customer Number: 20350

The reason(s) for this request are those described in 37 CFR:

10.40(b)(4)

Certifications

☒ I/We have given reasonable notice to the client, prior to the expiration of the response period, that the practitioner(s) intend to withdraw from employment

☒ I/We have delivered to the client or a duly authorized representative of the client all papers and property (including funds) to which the client is entitled

☒ I/We have notified the client of any responses that may be due and the time frame within which the client must respond

Change the correspondence address and direct all future correspondence to the first named inventor or assignee that has properly made itself of record pursuant to 37 CFR 3.71:

Name	Shared Spectrum Company
Address	1595 Spring Hill Road, Suite 700
City	Vienna
State	VA
Postal Code	22182
Country	US

I am authorized to sign on behalf of myself and all withdrawing practitioners.	
Signature	/Richard S. Meyer/
Name	Richard S. Meyer
Registration Number	32541

UNITED STATES PATENT AND TRADEMARK OFFICE

Commissioner for Patents
United States Patent and Trademark Office
P.O. Box 1450
Alexandria, VA 22313-1450
www.uspto.gov

Decision Date : March 26, 2012

In re Application of :

Mark McHenry

Application No : 12543790

Filed : 19-Aug-2009

Attorney Docket No : 027484-001240US

DECISION ON REQUEST TO WITHDRAW AS ATTORNEY/AGENTOF RECORD

This is an electronic decision on the Request to Withdraw as attorney or agent of record under 37 CFR § 1.36(b), filed March 26, 2012

The request is **APPROVED.**

The request was signed by Richard S. Meyer (registration no. 32541) on behalf of all attorneys/agents associated with Customer Number 20350 . All attorneys/agents associated with Cusotmer Number 20350 have been withdrawn.

Since there are no remaining attorneys of record, all future communications from the Office will be directed to the first named inventor or assignee that has properly made itself of record pursuant to 37 CFR 3.71, with correspondence address:

Name	Shared Spectrum Company
Name2	
Address 1	1595 Spring Hill Road, Suite 700
Address 2	
City	Vienna
State	VA
Postal Code	22182
Country	US

As a reminder, requester is required to inform the first named inventor or assignee that has properly made itself of record pursuant to 37 CFR 3.71 of the electronically processed petition.

Telephone inquiries concerning this decision should be directed to the Patent Electronic Business Center (EBC) at 866-217-9197.

Office of Petitions

UNITED STATES PATENT AND TRADEMARK OFFICE

Commissioner for Patents
United States Patent and Trademark Office
P.O. Box 1450
Alexandria, VA 22313-1450
www.uspto.gov

AKA CHAN LLP
900 LAFAYETTE STREET
SUITE 710
SANTA CLARA CA 95050

MAILED

JAN 18 2011

OFFICE OF PETITIONS

In re Application of	:	
Kothanda Umamageswaran	:	
Application No. 12/543,806	:	DECISION ON PETITION
Filed: August 19, 2009	:	TO WITHDRAW
Attorney Docket No. **ORACP002C1**	:	FROM RECORD

This is a decision on the Request to Withdraw as attorney or agent of record under 37 CFR § 1.36(b), filed December 24, 2010.

The request is **NOT APPROVED**.

The request cannot be approved because the Office no longer accept address changes to a new practitioner/customer number or law firm filed with a request, absent the filing of a power of attorney to the new representative.

The Office will only accept correspondence address changes to the most current address information provided for the assignee of the entire interest *who properly became of record under 37 CFR 3.71* or, the most current address information provided for the first named inventor. 37 CFR 3.71(c) states:

> *An assignee becomes of record either in a national patent application or a reexamination proceeding by filing a statement in compliance with § 3.73(b)*
> *that is signed by a party who is authorized to act on behalf of the assignee.*

The assignee must establish its ownership of the patent to the satisfaction of the Director. In this regard, the statement under 37 CFR 3.73(b) must have either: (i) documentary evidence of a chain of title from the original owner to the assignee (*e.g.*, copy of an executed assignment), and a statement affirming that the documentary evidence of the chain of title from the original owner to the assignee was or concurrently is being submitted for recordation pursuant

to § 3.11; or (ii) a statement specifying where documentary evidence of a chain of title from the original owner to the assignee is recorded in the assignment records of the Office (*e.g.*, reel and frame number).

All future communications from the Office will continue to be directed to the above-listed address until otherwise notified by applicant.

Telephone inquiries concerning this decision should be directed to JoAnne Burke at 571-272-4584.

JoAnne Burke
Petitions Examiner
Office of Petitions

UNITED STATES PATENT AND TRADEMARK OFFICE

UNITED STATES DEPARTMENT OF COMMERCE
United States Patent and Trademark Office
Address: COMMISSIONER FOR PATENTS
P.O. Box 1450
Alexandria, Virginia 22313-1450
www.uspto.gov

APPLICATION NO.	FILING DATE	FIRST NAMED INVENTOR	ATTORNEY DOCKET NO.	CONFIRMATION NO.
12/543,816	08/19/2009	Gerhard Olbert	347186US0	8085

7590 08/17/2011
OBLON, SPIVAK, MCCLELLAND MAIER & NEUSTADT, L.L.P.
1940 DUKE STREET
ALEXANDRIA, VA 22314

EXAMINER
DENTZ, BERNARD I

ART UNIT	PAPER NUMBER
1622	

NOTIFICATION DATE	DELIVERY MODE
08/17/2011	ELECTRONIC

DECISION GRANTING PETITION UNDER 37 CFR 1.138(d)

The declaration of express abandonment is recognized

This is in response to the petition under 37 CFR 1.138(d), requesting for a refund of any previously paid search fee and excess claims fee in the above-identified application.

The petition is granted.

The express abandonment is recognized. Any previously paid search fee and excess claims fee are hereby refunded.

Telephone inquiries should be directed to the Office of Data Management at (571) 272-4200.

Nimi Farmer

Patent Publication Branch
Office of Data Management

FORM PET651G (Rev. 08/07)

UNITED STATES PATENT AND TRADEMARK OFFICE

Commissioner for Patents
United States Patent and Trademark Office
P.O. Box 1450
Alexandria, VA 22313-1450
www.uspto.gov

Decision Date : June 14,2011

In re Application of :

Alan Roth

DECISION ON PETITION

UNDER CFR 1.313(c)(2)

Application No : 12543839

Filed : 19-Aug-2009

Attorney Docket No : 2037.2034-009

This is an electronic decision on the petition under 37 CFR 1.313(c)(2), filed June 14,2011 , to withdraw the above-identified application from issue after payment of the issue fee.

The petition is **GRANTED.**

The above-identified application is withdrawn from issue for consideration of a submission under 37 CFR 1.114 (request for continued examination). See 37 CFR 1.313(c)(2).

Petitioner is advised that the issue fee paid in this application cannot be refunded. If, however, this application is again allowed, petitioner may request that it be applied towards the issue fee required by the new Notice of Allowance.

Telephone inquiries concerning this decision should be directed to the Patent Electronic Business Center (EBC) at 866-217-9197.

This application file is being referred to Technology Center AU 2115 for processing of the request for continuing examination under 37 CFR 1.114 .

Office of Petitions

Doc Code: PET.AUTO Document Description: Petition automatically granted by EFS-Web	PTO/SB/140 U.S. Patent and Trademark Office Department of Commerce

Electronic Petition Request	**PETITION TO WITHDRAW AN APPLICATION FROM ISSUE AFTER PAYMENT OF THE ISSUE FEE UNDER 37 CFR 1.313(c)**
Application Number	12543839
Filing Date	19-Aug-2009
First Named Inventor	Alan Roth
Art Unit	2115
Examiner Name	CHUN CAO
Attorney Docket Number	2037.2034-009
Title	DOUBLE DATA RATE OUTPUT LATCH FOR STATIC RAM DEVICE HAS EDGE-TRIGGERED FLIP-FLOP TO OUTPUT DDR SIGNAL TO SYNCHRONIZE WITH A SECOND CLOCK SIGNAL

An application may be withdrawn from issue for further action upon petition by the applicant. To request that the Office withdraw an application from issue, applicant must file a petition under this section including the fee set forth in § 1.17(h) and a showing of good and sufficient reasons why withdrawal of the application from issue is necessary.

APPLICANT HEREBY PETITIONS TO WITHDRAW THIS APPLICATION FROM ISSUE UNDER 37 CFR 1.313(c).

A grantable petition requires the following items:
(1) Petition fee; and
(2) One of the following reasons:
(a) Unpatentability of one or more claims, which must be accompanied by an unequivocal statement that one or more claims are unpatentable, an amendment to such claim or claims, and an explanation as to how the amendment causes such claim or claims to be patentable;
(b) Consideration of a request for continued examination in compliance with § 1.114 (for a utility or plant application only); or
(c) Express abandonment of the application. Such express abandonment may be in favor of a continuing application, but not a CPA under 37 CFR 1.53(d).

Petition Fee

- ☐ Applicant claims SMALL ENTITY status. See 37 CFR 1.27.
- ☐ Applicant is no longer claiming SMALL ENTITY status. See 37 CFR 1.27(g)(2).
- ☐ Applicant(s) status remains as SMALL ENTITY.
- ☒ Applicant(s) status remains as other than SMALL ENTITY

Reason for withdrawal from issue

○ One or more claims are unpatentable

◉ Consideration of a request for continued examination (RCE) (List of Required Documents and Fees)

○ Applicant hereby expressly abandons the instant application (any attorney/agent signing for this reason must have power of attorney pursuant to 37 CFR 1.32(b)).

RCE request,submission, and fee.

☐ I certify, in accordance with 37 CFR 1.4(d)(4) that : The RCE request ,submission, and fee have already been filed in the above-identified application on

☒ Are attached.

THIS PORTION MUST BE COMPLETED BY THE SIGNATORY OR SIGNATORIES

I certify, in accordance with 37 CFR 1.4(d)(4) that I am:

◉ An attorney or agent registered to practice before the Patent and Trademark Office who has been given power of attorney in this application.

○ An attorney or agent registered to practice before the Patent and Trademark Office, acting in a representative capacity.

○ A sole inventor

○ A joint inventor; I certify that I am authorized to sign this submission on behalf of all of the inventors

○ A joint inventor; all of whom are signing this e-petition

○ The assignee of record of the entire interest that has properly made itself of record pursuant to 37 CFR 3.71

Signature	/Benjamin Sparrow/
Name	Benjamin Sparrow
Registration Number	62259

PATENT COOPERATION TREATY

PCT

INTERNATIONAL PRELIMINARY REPORT ON PATENTABILITY

(Chapter I of the Patent Cooperation Treaty)

(PCT Rule 44*bis*)

Applicant's or agent's file reference EV3N.017VPC	**FOR FURTHER ACTION**	See item 4 below
International application No. PCT/US2009/054353	International filing date *(day/month/year)* 19 August 2009 (19.08.2009)	Priority date *(day/month/year)* 19 August 2008 (19.08.2008)
International Patent Classification (8th edition unless older edition indicated) See relevant information in Form PCT/ISA/237		
Applicant MICRO THERAPEUTICS, INC.		

1. This international preliminary report on patentability (Chapter I) is issued by the International Bureau on behalf of the International Searching Authority under Rule 44 *bis*.1(a).

2. This REPORT consists of a total of 6 sheets, including this cover sheet.

   In the attached sheets, any reference to the written opinion of the International Searching Authority should be read as a reference to the international preliminary report on patentability (Chapter I) instead.

3. This report contains indications relating to the following items:

☒	Box No. I	Basis of the report
☐	Box No. II	Priority
☒	Box No. III	Non-establishment of opinion with regard to novelty, inventive step and industrial applicability
☐	Box No. IV	Lack of unity of invention
☒	Box No. V	Reasoned statement under Article 35(2) with regard to novelty, inventive step or industrial applicability; citations and explanations supporting such statement
☐	Box No. VI	Certain documents cited
☒	Box No. VII	Certain defects in the international application
☒	Box No. VIII	Certain observations on the international application

4. The International Bureau will communicate this report to designated Offices in accordance with Rules 44*bis*.3(c) and 93*bis*.1 but not, except where the applicant makes an express request under Article 23(2), before the expiration of 30 months from the priority date (Rule 44*bis* .2).

	Date of issuance of this report 22 February 2011 (22.02.2011)
The International Bureau of WIPO 34, chemin des Colombettes 1211 Geneva 20, Switzerland Facsimile No. +41 22 338 82 70	Authorized officer Gijsbertus Beijer e-mail: pt07.pct@wipo.int

PATENT COOPERATION TREATY

From the
INTERNATIONAL SEARCHING AUTHORITY

To:

see form PCT/ISA/220

PCT

WRITTEN OPINION OF THE INTERNATIONAL SEARCHING AUTHORITY

(PCT Rule 43*bis*.1)

Date of mailing
(day/month/year) see form PCT/ISA/210 (second sheet)

Applicant's or agent's file reference
see form PCT/ISA/220

FOR FURTHER ACTION
See paragraph 2 below

International application No.	International filing date *(day/month/year)*	Priority date *(day/month/year)*
PCT/US2009/054353	19.08.2009	19.08.2008

International Patent Classification (IPC) or both national classification and IPC
INV. A61M25/00

Applicant
MICRO THERAPEUTICS, INC.

1. This opinion contains indications relating to the following items:

- ☒ Box No. I Basis of the opinion
- ☐ Box No. II Priority
- ☒ Box No. III Non-establishment of opinion with regard to novelty, inventive step and industrial applicability
- ☐ Box No. IV Lack of unity of invention
- ☒ Box No. V Reasoned statement under Rule 43*bis*.1(a)(i) with regard to novelty, inventive step or industrial applicability; citations and explanations supporting such statement
- ☐ Box No. VI Certain documents cited
- ☒ Box No. VII Certain defects in the international application
- ☒ Box No. VIII Certain observations on the international application

2. **FURTHER ACTION**

If a demand for international preliminary examination is made, this opinion will usually be considered to be a written opinion of the International Preliminary Examining Authority ("IPEA") except that this does not apply where the applicant chooses an Authority other than this one to be the IPEA and the chosen IPEA has notifed the International Bureau under Rule 66.1*bis*(b) that written opinions of this International Searching Authority will not be so considered.

If this opinion is, as provided above, considered to be a written opinion of the IPEA, the applicant is invited to submit to the IPEA a written reply together, where appropriate, with amendments, before the expiration of 3 months from the date of mailing of Form PCT/ISA/220 or before the expiration of 22 months from the priority date, whichever expires later.

For further options, see Form PCT/ISA/220.

3. For further details, see notes to Form PCT/ISA/220.

Name and mailing address of the ISA:	Date of completion of this opinion	Authorized Officer
European Patent Office D-80298 Munich Tel. +49 89 2399 - 0 Fax: +49 89 2399 - 4465	see form PCT/ISA/210	Mausser, Thomas Telephone No. +49 89 2399-2355

WRITTEN OPINION OF THE INTERNATIONAL SEARCHING AUTHORITY

International application No.
PCT/US2009/054353

Box No. I Basis of the opinion

1. With regard to the **language**, this opinion has been established on the basis of:

   ☒ the international application in the language in which it was filed

   ☐ a translation of the international application into , which is the language of a translation furnished for the purposes of international search (Rules 12.3(a) and 23.1 (b)).

2. ☐ This opinion has been established taking into account the **rectification of an obvious mistake** authorized by or notified to this Authority under Rule 91 (Rule 43bis.1(a))

3. With regard to any **nucleotide and/or amino acid sequence** disclosed in the international application and necessary to the claimed invention, this opinion has been established on the basis of:

   a. type of material:

   ☐ a sequence listing

   ☐ table(s) related to the sequence listing

   b. format of material:

   ☐ on paper

   ☐ in electronic form

   c. time of filing/furnishing:

   ☐ contained in the international application as filed.

   ☐ filed together with the international application in electronic form.

   ☐ furnished subsequently to this Authority for the purposes of search.

4. ☐ In addition, in the case that more than one version or copy of a sequence listing and/or table relating thereto has been filed or furnished, the required statements that the information in the subsequent or additional copies is identical to that in the application as filed or does not go beyond the application as filed, as appropriate, were furnished.

5. Additional comments:

Box No. III Non-establishment of opinion with regard to novelty, inventive step and industrial applicability

The questions whether the claimed invention appears to be novel, to involve an inventive step (to be non obvious), or to be industrially applicable have not been examined in respect of

☐ the entire international application

☒ claims Nos. 13-24, 46

because:

☐ the said international application, or the said claims Nos. relate to the following subject matter which does not require an international search *(specify)*:

☐ the description, claims or drawings *(indicate particular elements below)* or said claims Nos. are so unclear that no meaningful opinion could be formed *(specify)*:

☐ the claims, or said claims Nos. are so inadequately supported by the description that no meaningful opinion could be formed *(specify)*:

☒ no international search report has been established for the whole application or for said claims Nos. 13-24, 46

☐ a meaningful opinion could not be formed without the sequence listing; the applicant did not, within the prescribed time limit:

- ☐ furnish a sequence listing on paper complying with the standard provided for in Annex C of the Administrative Instructions, and such listing was not available to the International Searching Authority in a form and manner acceptable to it.
- ☐ furnish a sequence listing in electronic form complying with the standard provided for in Annex C of the Administrative Instructions, and such listing was not available to the International Searching Authority in a form and manner acceptable to it.
- ☐ pay the required late furnishing fee for the furnishing of a sequence listing in response to an invitation under Rules 13*ter*.1(a) or (b).

☐ a meaningful opinion could not be formed without the tables related to the sequence listings; the applicant did not, within the prescribed time limit, furnish such tables in electronic form complying with the technical requirements provided for in Annex C-*bis* of the Administrative Instructions, and such tables were not available to the International Searching Authority in a form and manner acceptable to it.

☐ the tables related to the nucleotide and/or amino acid sequence listing, if in electronic form only, do not comply with the technical requirements provided for in Annex C-*bis* of the Administrative Instructions.

☐ See Supplemental Box for further details

Box No. V Reasoned statement under Rule 43*bis*.1(a)(i) with regard to novelty, inventive step or industrial applicability; citations and explanations supporting such statement

1. Statement

Novelty (N)	Yes:	Claims	1-12, 25-45
	No:	Claims	
Inventive step (IS)	Yes:	Claims	1-12, 25-45
	No:	Claims	
Industrial applicability (IA)	Yes:	Claims	1-12, 25-45
	No:	Claims	

2. Citations and explanations

see separate sheet

Box No. VII Certain defects in the international application

The following defects in the form or contents of the international application have been noted:

see separate sheet

Box No. VIII Certain observations on the international application

The following observations on the clarity of the claims, description, and drawings or on the question whether the claims are fully supported by the description, are made:

see separate sheet

RE ITEM III

Claims 13 to 24 and 46 concern a method for treatment of the human or animal body by surgery (Rule 39.1(iv) PCT).

RE ITEM V

Reference is made to the following documents:
D1 : US 2002/198440 A1 (SNOW TODD [US]) 26 December 2002 (2002-12-26)
D2 : US 4 698 056 A (CIANNELLA MICHAEL A [US]) 6 October 1987 (1987-10-06)

The subject-matter of claims 1, 25, 37 and 41 seems to involve an inventive step (Article 33(3) PCT) because it allows easier removal of the microcatheter after delivery of embolic agent to a vascular site.

Claims 2-12, 26-36, 38-40, 42-45 are dependent on the above claims and as such also seem to meet the requirements of the PCT with respect to novelty and inventive step.

RE ITEM VII

The features of the claims are not provided with reference signs placed in parentheses (Rule 6.2(b) PCT).

It is appropriate to draft the independent claim in the two-part form, whereby the features known from D1 should be placed in the preamble.

If the applicant is of the opinion that a two-part form of the claim would be inappropriate he is invited to provide reasons in his reply. In addition, the applicant should ensure that it is clear from the description which features of the subject-matter of the independent

RE ITEM VIII

Although claims 1, 25, 37 and 41 have been drafted as separate independent claims, they appear to relate effectively to the same subject-matter and to differ from each other only with regard to the definition of the subject-matter for which protection is sought and in respect of the terminology used for the features of that subject-matter. The aforementioned claims therefore lack conciseness. Moreover, lack of clarity of the claims as a whole arises, since the plurality of independent claims makes it difficult, if not impossible, to determine the matter for which protection is sought, and places an undue burden on others seeking to establish the extent of the protection.

Hence, claims 1, 25, 37 and 41 do not meet the requirements of Article 6 PCT.

In order to overcome this objection, it would appear appropriate to file an amended set of claims defining the relevant subject-matter in terms of a single independent claim in each category followed by dependent claims covering features which are merely optional.

Claims Indicated as Having Novelty, Inventive Step and Industrial Applicability (Claims 1-12 and 25-45) from PCT/US2009/054353

WHAT IS CLAIMED IS:

1. A microcatheter for delivering embolic agent to a vascular site within a patient comprising:

an elongate flexible tubular body having a proximal end, a distal end and at least one lumen extending axially there through;

a tip body having a proximal end and a distal end and a lumen extending axially there through; and

a thermoplastically fitted sleeve covering a portion of both the tubular body and tip body;

wherein the sleeve is frictionally engaged with both the tubular body and tip body, and the tip is detachable from one of the tubular body and tip body by application of a retraction force.

2. The microcatheter of Claim 1, wherein the sleeve forms a tighter frictional engagement with the tubular body than with the tip body.

3. The microcatheter of Claim 1, further comprising a first marker disposed on the distal end of the tubular body under the sleeve for indicating a position of the tip body prior to detachment of the tip body.

4. The microcatheter of Claim 3, wherein the first marker is a radiopaque marker band on an outer surface of the tubular body.

5. The microcatheter of Claim 1, further comprising a second marker disposed on the tubular body for indicating a position of the tip body after detachment of the tip body.

6. The microcatheter of Claim 1, wherein the tip body comprises a plurality of holes on a side wall of the tip body for delivering the embolic agent to the vascular site.

7. The microcatheter of Claim 1, wherein the sleeve is a thermoplastic selected from the group consisting of thermoplastic polyolefin elastomer (TPE).acrylic; celluloid; cellulose acetate; ethylene-vinyl acetate (EVA); ethylene vinyl alcohol (EVAL); fluoroplastics (PTFE, FEP, PFA, CTFE, ECTFE, ETFE); ionomers; acrylic/PVC alloy; liquid crystal polymer (LCP); polyacetal (POM or Acetal); polyacrylonitrile (PAN or acrylonitrile); polyamide (PA or Nylon);;

polyaryletherketone (PAEK or Ketone); polybutadiene (PBD); polybutylene (PB); polycaprolactone (PCL); polychlorotrifluoroethylene (PCTFE); polyhydroxyalkanoates (PHAs); polyketone (PK); polyester; low density polyethylene (LDPE); linear low density polyethylene (LLDPE); polyethylene (PE); polyetherimide (PEI); polyethersulfone (PES); polysulfone; polyethylenechlorinates (PEC); polylactic acid (PLA); polymethylpentene (PMP); polyphenylene oxide (PPO); polyphenylene sulfide (PPS); polyphthalamide (PPA); polypropylene (PP); polystyrene (PS); polyvinyl chloride (PVC); polyvinylidene chloride (PVDC); and combinations thereof.

8. The microcatheter of Claim 7, wherein the thermoplastic is a polyolefin.

9. The microcatheter of Claim 8, wherein the polyolefin is polyethylene or polyolefin elastomer or combinations thereof.

10. The microcatheter of Claim 1, wherein the retraction force is between approximately 10 to 160 gram-force.

11. The microcatheter of Claim 10, wherein the microcatheter has a static burst strength of between about 150 and 400 psi, and the retraction force is between about 25 and 40 gram-force.

12. The microcatheter of Claim 1, wherein the sleeve comprises an internal separation element.

25. A microcatheter comprising:

a tubular body having a proximal portion, a distal portion, and a lumen extending from the proximal portion to the distal portion for introducing a fluid agent;

a tip body coupled to the distal portion of the tubular body for delivering the fluid agent to a site in the vasculature of a patient;

detachment means disposed between the distal portion of the tubular body and the tip body for detaching the tip body from the tubular body after delivery of the fluid agent; and

a first marker, said first marker is disposed on the distal portion of the tubular body immediately proximal to the detachment means for indicating a position of the tip body before the tip body being detached, and remains on the tubular body after the tip body being detached to be removed out of the patient with the tubular body.

26. The microcatheter of Claim 25 wherein said detachment site has a lower tensile strength than the adjacent tubing of the catheter.

27. The microcatheter of Claim 25 wherein said first marker is a radiopaque marker band on the outer surface of the tubular body.

28. The microcatheter of Claim 25 wherein said tip body comprises a plurality of holes on the side wall for delivering the fluid agent.

29. The microcatheter of Claim 25 wherein said tip body comprises a hole on a distal end of the tip body for delivering the fluid agent.

30. The microcatheter of Claim 25 further comprising a second marker which is disposed immediately proximal to a distal end of the tip body providing an indication of a position of the tip body after or before the tip body is detached from the tubular body.

31. The microcatheter of Claim 25 wherein said tip body is made of a biodegradable material.

32. The microcatheter of Claim 25 wherein said detachment means comprises a tubular member made of a same material of the tubular body and having a wall thickness that is at least 10 percent smaller than a wall thickness of the tubular body.

33. The microcatheter of Claim 25 wherein said detachment means comprises a structure that is breakable by mechanical or electrical means.

34. The microcatheter of Claim 25 wherein said detachment means comprises a receiving structure into which the tip body is fitted.

35. The microcatheter of Claim 25 wherein said detachment means comprises a thermal bonding or a pressure bonding that provides a predetermined bonding strength between the tip body and tubular body.

36. The microcatheter of Claim 25 which is adapted to deliver an embolic agent for treating an aneurysm.

37. A neuromicrocatheter for delivering a fluid embolic agent to a site in the neurovasculature of a patient, comprising:

an elongated tubular body having a proximal portion, a distal portion, and a lumen extending from the proximate portion to the distal portion for introducing a fluid embolic agent;

a tip body coupled to the distal portion of the tubular body for delivering the embolic agent from said lumen to a site in the neurovasculature of a patient;

detachment means disposed between the distal portion of the tubular body and the tip body and adapted to detach the tip body from the tubular body after delivering the embolic agent;

a first marker disposed on the distal portion of the tabular body immediately proximal to the detachment means providing an indication of a position of the tip body before being detached, said first marker remains on the tubular body to be removed out of the patient after the tip body being detached; and

optionally a second marker disposed immediately proximal to a distal end of the tip body providing an indication of a position of the tip body after and/or before the tip body is detached.

38. The microcatheter of Claim 37 in which said tip body comprises a plurality of holes on the side wall of the tip body for delivering the embolic agent to the site in the neurovasculature.

39. The microcatheter of Claim 37 in which said tip body is made of a material that is biodegradable.

40. The microcatheter of Claim 37 in which said detachment means is breakable by electrical or mechanical means.

41. A microcatheter kit comprising:

a tubular body having a proximal portion, a distal portion, and a lumen extending from the proximal portion to the distal portion for introducing a fluid agent;

a tip body adapted to be coupled to the distal portion of the tubular body for delivering the fluid agent from the lumen to a site in the neurovasculature in a patient;

attachment means for coupling the tip body to the distal portion of the tubular body, said attachment means is adapted to detach the tip body from the tubular body after delivery of the fluid agent;

a first marker disposed on the distal portion of the tubular body immediately proximate to the attachment means to provide an indication of a position of the tip body in the neurovasculature; and

optionally a second marker disposed immediately proximate to a distal end of the tip body.

42. The microcatheter kit of Claim 41 further comprising a second marker, said second marker is disposed on a distal end of the tip body to provide an indication of a position of the tip body before and/or after the tip body is detached from the tubular body.

43. The microcatheter kit of Claim 41 wherein said tip body comprises a plurality of holes on the side wall of the tip body.

44. The microcatheter kit of Claim 41 wherein said attachment means comprises a receiving structure into which the tip body is fitted.

45. The microcatheter kit of Claim 41 in which said tip body is made of a material that is biodegradable.

PTO/SB/20PCT-EP (05-10)
Approved for use through 01/31/2012. OMB 0651-0058
U.S. Patent and Trademark Office; U. S. DEPARTMENT OF COMMERCE
Under the Paperwork Reduction Act of 1995, no persons are required to respond to a collection of information unless it displays a valid OMB control number.

REQUEST FOR PARTICIPATION IN THE PATENT COOPERATION TREATY - PATENT PROSECUTION HIGHWAY (PCT-PPH) PILOT PROGRAM BETWEEN THE EUROPEAN PATENT OFFICE (EPO) AND THE USPTO

Application No:	12/543,857	Filing date:	08/19/2009
First Named Inventor:	Karl Sutherland		
Title of the Invention:	DETACHABLE TIP MICROCATHETER		

THIS REQUEST FOR PARTICIPATION IN THE PCT-PPH PILOT PROGRAM ALONG WITH THE REQUIRED DOCUMENTS MUST BE SUBMITTED VIA EFS-WEB. INFORMATION REGARDING EFS-WEB IS AVAILABLE AT HTTP://WWW.USPTO.GOV/EBC/EFS_HELP.HTML

APPLICANT HEREBY REQUESTS PARTICIPATION IN THE PCT-PPH PROGRAM AND PETITIONS TO MAKE THE ABOVE-IDENTIFIED APPLICATION SPECIAL UNDER THE PCT-PPH PROGRAM.

The above-identified application is (1) a national stage entry of the corresponding PCT application, or (2) a national stage entry of another PCT application which claims priority to the corresponding PCT application, or (3) a national application that claims domestic/ foreign priority to the corresponding PCT application, or (4) a national application which forms the basis for the priority claim in the corresponding PCT application, or (5) a continuing application of a U.S. application that satisfies one of (1) to (4) above, or (6) a U.S. application that claims domestic benefit to a U.S. provisional application which forms the basis for the priority claim in the corresponding PCT application.

The corresponding PCT application number(s) is/are: PCT/US2009/054353

The international filing date of the corresponding PCT application(s) is/are: 08/19/2009

I. List of Required Documents:

a. **A copy of the latest international work product (WO/ISA, WO/IPEA, or IPER) in the above–identified corresponding PCT application(s)**

- [x] Is attached
- [ ] Is not attached because the document is already in the U.S. application.

b. **A copy of all claims which were indicated as having novelty, inventive step and industrial applicability in the above-identified corresponding PCT application(s).**

- [x] Is attached.
- [ ] Is not attached because the document is already in the U.S. application.

c. **English translations of the documents in a. and b. above are attached (if the documents are not in the English language). A statement that the English translation is accurate is attached for the document in b. above.**

This collection of information is required by 35 U.S.C. 119, 37 CFR 1.55, and 37 CFR 1.102(d). The information is required to obtain or retain a benefit by the public, which is to file (and by the USPTO to process) an application. Confidentiality is governed by 35 U.S.C. 122 and 37 CFR 1.11 and 1.14. This collection is estimated to take 2 hours to complete, including gathering, preparing, and submitting the completed application form to the USPTO. Time will vary depending upon the individual case. Any comments on the amount of time you require to complete this form and/or suggestions for reducing this burden should be sent to the Chief Information Officer, U.S. Patent and Trademark Office, U.S. Department of Commerce, P.O. Box 1450, Alexandria, VA 22313-1450. DO NOT SEND FEES OR COMPLETED FORMS TO THIS ADDRESS.

Approved for use through 01/31/2012. OMB 0651-0058
U.S.Patent and Trademark Office; U.S. DEPARTMENT OF COMMERCE
Under the Paperwork Reduction Act of 1995, no persons are required to respond to a collection of information unless it displays a valid OMB control number.

REQUEST FOR PARTICIPATION IN THE PCT-PPH PILOT PROGRAM BETWEEN THE EPO AND THE USPTO

(continued)

Application No.:	12/543,857
First Named Inventor:	Karl Sutherland

d. **(1) An information disclosure statement listing the documents cited in the international work products (ISR, WO/ISA, WO/IPEA, IPER) of the corresponding PCT application.**

- [x] Is attached
- [ ] Has already been filed in the above-identified U.S. application on _____

(2) Copies of all documents (except) for U.S. patents or U.S. patent application publications)

- [x] Are attached.
- [ ] Have already been filed in the above-identified U.S. application on _____

II. Claims Correspondence Table:

Claims in US Application	Patentable Claims in the corresponding PCT Application	Explanation regarding the correspondence
13-24	1-12	Claims are identical except for typographical amendment
		made to Claim 13 in a preliminary amendment filed herewith
47-67	25-45	Claims are identical
		BOX VIII from WO and IPRP
		Applicants submit that the language from Box VIII in the WO and the
		IPRP is not applicable to the pending claims in the U.S. application.
		The pending U.S. claims all recite either a microcatheter apparatus
		or microcatheter kit. Unlike the U.S., certain foreign jurisdictions may
		have limits on the number of independent apparatus claims or kit claims
		in a single application. Applicants submit that the U.S. Examiner's search
		would not be affected by having multiple apparatus claims and a kit claim,
		and that a single search would be adequate. Applicants submit that
		having multiple apparatus claims and a kit claim does not create a lack
		of conciseness or clarity in the U.S. application.

III. All the claims in the US application sufficiently correspond to the patentable claims in the corresponding PCT application.

Signature /Benjamin E. Evans/	Date March 31, 2011
Name (Print/Typed) Benjamin E. Evans	Registration Number 60,293

Privacy Act Statement

The **Privacy Act of 1974 (P.L. 93-579)** requires that you be given certain information in connection with your submission of the attached form related to a patent application or patent. Accordingly, pursuant to the requirements of the Act, please be advised that: (1) the general authority for the collection of this information is 35 U.S.C. 2(b)(2); (2) furnishing of the information solicited is voluntary; and (3) the principal purpose for which the information is used by the U.S. Patent and Trademark Office is to process and/or examine your submission related to a patent application or patent. If you do not furnish the requested information, the U.S. Patent and Trademark Office may not be able to process and/or examine your submission, which may result in termination of proceedings or abandonment of the application or expiration of the patent.

The information provided by you in this form will be subject to the following routine uses:

1. The information on this form will be treated confidentially to the extent allowed under the Freedom of Information Act (5 U.S.C. 552) and the Privacy Act (5 U.S.C 552a). Records from this system of records may be disclosed to the Department of Justice to determine whether disclosure of these records is required by the Freedom of Information Act.
2. A record from this system of records may be disclosed, as a routine use, in the course of presenting evidence to a court, magistrate, or administrative tribunal, including disclosures to opposing counsel in the course of settlement negotiations.
3. A record in this system of records may be disclosed, as a routine use, to a Member of Congress submitting a request involving an individual, to whom the record pertains, when the individual has requested assistance from the Member with respect to the subject matter of the record.
4. A record in this system of records may be disclosed, as a routine use, to a contractor of the Agency having need for the information in order to perform a contract. Recipients of information shall be required to comply with the requirements of the Privacy Act of 1974, as amended, pursuant to 5 U.S.C. 552a(m).
5. A record related to an International Application filed under the Patent Cooperation Treaty in this system of records may be disclosed, as a routine use, to the International Bureau of the World Intellectual Property Organization, pursuant to the Patent Cooperation Treaty.
6. A record in this system of records may be disclosed, as a routine use, to another federal agency for purposes of National Security review (35 U.S.C. 181) and for review pursuant to the Atomic Energy Act (42 U.S.C. 218(c)).
7. A record from this system of records may be disclosed, as a routine use, to the Administrator, General Services, or his/her designee, during an inspection of records conducted by GSA as part of that agency's responsibility to recommend improvements in records management practices and programs, under authority of 44 U.S.C. 2904 and 2906. Such disclosure shall be made in accordance with the GSA regulations governing inspection of records for this purpose, and any other relevant (*i.e.*, GSA or Commerce) directive. Such disclosure shall not be used to make determinations about individuals.
8. A record from this system of records may be disclosed, as a routine use, to the public after either publication of the application pursuant to 35 U.S.C. 122(b) or issuance of a patent pursuant to 35 U.S.C. 151. Further, a record may be disclosed, subject to the limitations of 37 CFR 1.14, as a routine use, to the public if the record was filed in an application which became abandoned or in which the proceedings were terminated and which application is referenced by either a published application, an application open to public inspection or an issued patent.
9. A record from this system of records may be disclosed, as a routine use, to a Federal, State, or local law enforcement agency, if the USPTO becomes aware of a violation or potential violation of law or regulation.

(12) INTERNATIONAL APPLICATION PUBLISHED UNDER THE PATENT COOPERATION TREATY (PCT)

(19) World Intellectual Property Organization
International Bureau

(43) International Publication Date
25 February 2010 (25.02.2010)

PCT

(10) International Publication Number
WO 2010/022180 A1

(51) International Patent Classification:
A61M 25/00 (2006.01)

(21) International Application Number:
PCT/US2009/054353

(22) International Filing Date:
19 August 2009 (19.08.2009)

(25) Filing Language: English

(26) Publication Language: English

(30) Priority Data:
61/090,188 19 August 2008 (19.08.2008) US
61/090,185 19 August 2008 (19.08.2008) US

(71) Applicant *(for all designated States except US)*: **MICRO THERAPEUTICS, INC.** [US/US]; 9775 Toledo Way, Irvine, CA 92618 (US).

(72) Inventors; and
(75) Inventors/Applicants *(for US only)*: **SUTHERLAND, Karl** [US/US]; 25015 Hendon Street, Laguna Hills, CA 92653 (US). **SLEE, Earl, Howard** [US/US]; 7 White Sail, Laguna Niguel, CA 92677 (US). **SIPELIS, Vitas, Jonas** [CA/US]; 16 Calle Mandarina, San Clemente, CA 92673 (US). **SIMINUK, Mark, Anthony** [US/US]; 23911 Larkwood Lane, Lake Forest, CA 92630 (US). **STRAUSS, Brian, Michael** [US/US]; 20592 Porter Ranch Road, Trabuco Canyon, CA 92679 (US).

(74) Agent: **ALTMAN, Daniel, E.**; Knobbe Martens Olsen & Bear, LLP, 2040 Main Street, Fourteenth Floor, Irvine, CA 92614 (US).

(81) Designated States *(unless otherwise indicated, for every kind of national protection available)*: AE, AG, AL, AM, AO, AT, AU, AZ, BA, BB, BG, BH, BR, BW, BY, BZ, CA, CH, CL, CN, CO, CR, CU, CZ, DE, DK, DM, DO, DZ, EC, EE, EG, ES, FI, GB, GD, GE, GH, GM, GT, HN, HR, HU, ID, IL, IN, IS, JP, KE, KG, KM, KN, KP, KR, KZ, LA, LC, LK, LR, LS, LT, LU, LY, MA, MD, ME, MG, MK, MN, MW, MX, MY, MZ, NA, NG, NI, NO, NZ, OM, PE, PG, PH, PL, PT, RO, RS, RU, SC, SD, SE, SG, SK, SL, SM, ST, SV, SY, TJ, TM, TN, TR, TT, TZ, UA, UG, US, UZ, VC, VN, ZA, ZM, ZW.

(84) Designated States *(unless otherwise indicated, for every kind of regional protection available)*: ARIPO (BW, GH, GM, KE, LS, MW, MZ, NA, SD, SL, SZ, TZ, UG, ZM, ZW), Eurasian (AM, AZ, BY, KG, KZ, MD, RU, TJ,

[Continued on next page]

(54) Title: DETACHABLE TIP MICROCATHETER

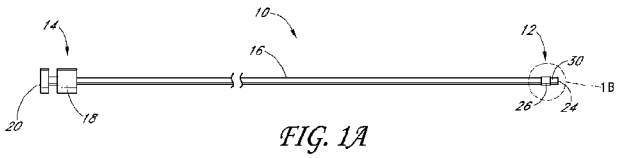

FIG. 1A

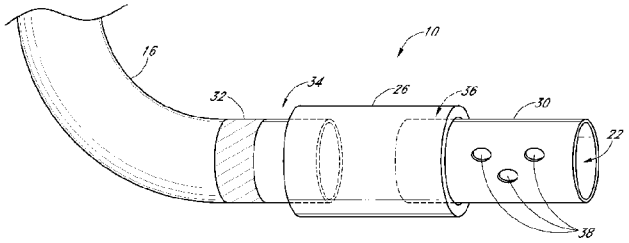

FIG. 1B

(57) Abstract: A microcatheter for delivering embolic agent to a vascular site is provided. The microcatheter has a biocompatible or biocompatible and biodegradable tip which can be detachably engaged to the microcatheter body by a thermoplastic sleeve. Once the embolic agent is delivered to the desired vascular site, the tip of the microcatheter is often entrapped within the mass of the liquid embolic fluid. Using the microcatheter, the clinician can retract the microcatheter at a predetermined retraction force thereby disengaging the tip from the microcatheter body allowing for easier removal of the microcatheter.

WO 2010/022180 A1

TM), European (AT, BE, BG, CH, CY, CZ, DE, DK, EE, ES, FI, FR, GB, GR, HR, HU, IE, IS, IT, LT, LU, LV, MC, MK, MT, NL, NO, PL, PT, RO, SE, SI, SK, SM, TR), OAPI (BF, BJ, CF, CG, CI, CM, GA, GN, GQ, GW, ML, MR, NE, SN, TD, TG).

Published:

— *with international search report (Art. 21(3))*

— *before the expiration of the time limit for amending the claims and to be republished in the event of receipt of amendments (Rule 48.2(h))*

DETACHABLE TIP MICROCATHETER

Claim of Priority

[0001] This application claims benefit under 35 U.S.C. §119(e) to U.S. Provisional Patent Application No. 61/090,185, filed August 19, 2008, and U.S. Provisional Patent Application No. 61/090,188, filed August 19, 2008, each of which is incorporated in its entirety by reference herein.

Field of the Inventions

[0002] This application relates to detachable tip catheters, including a detachable, biocompatible tip microcatheter having a thermoplastic sleeve.

BACKGROUND

[0003] Microcatheters, including neuromicrocatheters, are generally microtubes inserted into the body through a blood vessel such as the femoral artery and have a variety of uses (see, e.g., U.S. Patent Nos. 6,306,124 and 6,454,738). Microcatheters have a distal and a proximal end where, typically, at or near the very distal end, a marker band is employed to permit the clinician to visualize the microcatheter positioning during *in vivo* use. The marker band typically comprises a metal or metal alloy ring such as platinum, nitinol and/or gold rings which can be visualized via fluoroscopy.

[0004] Microcatheters are typically used to embolize the neurovasculature such as in treating arteriovenous malformations (AVMs), aneurysms, and the like in a relatively non-invasive manner. See, for example, Jones, et al., (U.S. Patent No. 5,843,050), which discloses a microcatheter for negotiating small tortuous vessels or the neurovasculature.

[0005] A variety of microcatheters, suitable for the wide variety of applications, are available commercially. Neurovascular embolization devices include intravascular compositions which solidify *in vivo* so as to permanently occlude blood flow to cerebral aneurysms and cerebral arteriovenous malformations. Suitable intravascular compositions include, by way of example only, cyanoacrylates which polymerize *in vivo* to form a solid mass as well as solutions of a biocompatible, water insoluble polymer dissolved in a non-aqueous solvent such as dimethyl sulfoxide ("DMSO") whereupon introduction into the vasculature, the DMSO dissipates and the polymer precipitates in the aqueous based blood

composition. Such intravascular compositions further comprise a contrast agent to assist in visualization of the formed mass.

[0006] One problem associated with microcatheter use particularly in effecting neurovascular embolization is the phenomena referred to as "reflux." Typically, during neurovascular embolization, a solid mass is formed from an embolic agent, such as for example an embolic liquid, delivered in *situ* to the embolization site. The embolic agent, in the form of a prepolymer such as a cyanoacrylate prepolymer or a polymeric solution such as an Onyx® formulation (available from ev3 Neurovascular, Irvine, CA and comprises ethylene vinyl alcohol copolymer, DMSO and tantalum) is ejected distally from the microcatheter tip and forms a solid mass at this distal point. However, in certain cases, "flow back" or "reflux" of the liquid composition prior to solidification can occur and the embolic agent can engulf the microcatheter tip. In such cases, the microcatheter tip can be entrapped in the solid mass upon solidification of the embolic agent. Even in instances where reflux is avoided, the microcatheter may become trapped in the blood vessel as a result of vasospasm causes by the presence of DMSO or other spasmodic materials in the embolic composition.

[0007] When reflux or vasospasm occurs, the clinician is often reluctant to use excessive force to remove the neuromicrocatheter for concerns over vessel tear or rupture. Typically, the clinician either must attempt to withdraw the neuromicrocatheter by force, often resulting in microcatheter breakage, or must cut the microcatheter. In either event, a portion of the neuromicrocatheter remains in the patient's vasculature. Alternatively, the clinician can attempt to minimize reflux by underfilling the cavity thereby leaving less than a desirable therapeutic outcome and yet not completely eliminating the risk of a trapped neuromicrocatheter.

SUMMARY

[0008] An aspect of at least one of the embodiments described herein includes the realization that it is advantageous to provide microcatheters which can be safely removed from the patient in the event that they become trapped in the vasculature for any reason, while minimizing the potential deleterious effects caused by such complications. It is further advantageous to provide microcatheters which can maintain a high burst strength so as to inhibit the microcatheters from separating or bursting during the injection of the embolic

agent, as well as a low retraction force for removal of the microcatheter in the event of reflux either before and/or after delivery of the embolic agent.

[0009] Thus, in accordance with at least one embodiment, a method for using microcatheter can comprise advancing a microcatheter into the patient, the microcatheter comprising an elongate flexible tubular body having a proximal end, a distal end and at least one lumen extending axially there through, a tip body having a proximal end and a distal end and a lumen extending axially there through, and a thermoplastically fitted sleeve covering a distal end of the tubular body and a proximal end of the tip body. The method can further comprise placing the tip body at the vascular site, delivering the embolic agent through the lumen of the tubular body and the lumen of the tip body, and detaching the tip body from the tubular body by applying a retraction force to the tubular body, the tip body remaining with the embolic agent.

[0010] In accordance with another embodiment, a microcatheter for delivering embolic agent to a vascular site within a patient can comprise an elongate flexible tubular body having a proximal end, a distal end and at least one lumen extending axially there through, a tip body having a proximal end and a distal end and a lumen extending axially there through, and a thermoplastically fitted sleeve covering a portion of both the tubular body and tip body, wherein the sleeve is frictionally engaged with both the tubular body and tip body, and the tip is detachable from one of the tubular body and tip body by application of a retraction force.

DETAILED DESCRIPTION OF THE DRAWINGS

[0011] These and other features and advantages of the present embodiments will become more apparent upon reading the following detailed description and with reference to the accompanying drawings of the embodiments, in which:

[0012] Figure 1A is a side elevation view of a microcatheter according to one embodiment.

[0013] Figure 1B is an enlarged view of a tip detachment portion of the microcatheter of Fig. 1A.

[0014] Figure 2A is a schematic view of a positioning method using the microcatheter of Fig. 1A to treat an aneurysm.

[0015] Figure 2B is an enlarged view of a portion of the microcatheter of Fig. 1A showing the microcatheter tip body and thermoplastic sleeve detachably released from the microcatheter tubular body.

[0016] Figure 2C is an enlarged view of a portion of the microcatheter of Fig. 1A showing the microcatheter tip body detachably released from the microcatheter tubular body and thermoplastic sleeve.

[0017] Figure 2D is a schematic view of an arteriovenous malformation.

[0018] Figure 2E is a schematic view of a positioning method using the microcatheter of Fig. 1A to treat the arteriovenous malformation.

[0019] Figure 3 is a schematic view of the microcatheter tubular body, the tip body, and the thermoplastic sleeve of Figure 1A.

[0020] Figure 4 is a schematic view of the thermoplastic sleeve of Figure 1A detachably engaged to the microcatheter tubular body.

[0021] Figure 5 is a schematic view of the thermoplastic sleeve of Figure 1A detachably engaged to the microcatheter tubular body and the tip body. Figure 5 also shows side holes in the tip body.

[0022] Figure 6 is a schematic side view of a microcatheter according to another embodiment.

[0023] Figure 7A is an enlarged cross-sectional view of a tip detachment area of the microcatheter of Figure 6.

[0024] Figure 7B is a perspective cross-sectional view of a sleeve according to another embodiment.

[0025] Figure 7C is a perspective cross-sectional view of a sleeve according to another embodiment.

[0026] Figure 8 is an enlarged cross-sectional view of the tip body of the microcatheter of Figure 6.

[0027] Figure 9 is a chart illustrating the relationship between burst strength and detachment force for the microcatheter of Figure 6.

[0028] Figure 10 is a cross-sectional view of a portion of a microcatheter according to another embodiment, including a thin-walled detachment portion.

[0029] Figure 11 is a cross-sectional view of a portion of a microcatheter according to another embodiment, including a detachment ring.

[0030] Figure 12 is a cross-sectional view of a portion of a microcatheter according to another embodiment with a separately manufactured detachable tip.

[0031] Figure 13 is a cross-sectional view of a portion of a microcatheter according to another embodiment, showing a tip having side holes.

[0032] Figure 14 is a perspective view of a portion of a microcatheter according to another embodiment, showing a catheter tip comprising gripping structures.

[0033] Figure 15 illustrates is a schematic side view of a microcatheter according to another embodiment having a detachable tip, side holes, and marker bands.

DETAILED DESCRIPTION OF THE PREFERRED EMBODIMENTS

[0034] Unless defined otherwise, all technical and scientific terms used herein have the same meanings as commonly understood by one of ordinary skill in the art. Although any methods and materials similar or equivalent to those described herein can be used in the practice or testing of the embodiments described herein, the preferred methods, devices, and materials are now described. All publications and patent applications cited herein are incorporated herein by reference in their entirety.

[0035] It must be noted that as used herein and in the appended claims, the singular forms "a," "an," and "the" include plural references unless the context clearly dictates otherwise.

Detachable Tip Microcatheter With Thermoplastic Sleeve

[0036] With reference to Fig. 1, a microcatheter 10 (e.g. a neuromicrocatheter) can be useful for delivering embolic agents to vascular sites of patients. Typically, these vascular sites are located in the neurovasculature, and include AVMs and aneurysms. However, this technique can be used in any vessel in the body, and can be useful for embolizing any body lumen. Microcatheter 10 can comprise a distal end 12, a proximal end 14, and an elongate flexible tubular body 16 extending therebetween.

[0037] The distal end 12 of the microcatheter can be comprised of a biocompatible tip body 30 which is detachably engaged and coaxial with the tubular body 16 by a sleeve 26, such as for example a thermoplastic sleeve (see, e.g. Fig. 1B). What is meant

by "detachably engaged" is that the tip body 30 is engaged with or attached to the tubular body 16; however, the two may be disengaged or detached upon application of a retraction force that may be predetermined. What is meant by "retraction force" is generally a tensile force applied along the longitudinal axis of the microcatheter 10 (e.g., parallel to the central lumen 22) in the proximal direction (e.g., in the direction that would withdraw the microcatheter from the patient). The retraction force used to detach the tubular body 16 from the tip body 30 can, for example, be no more than about 160 gram-force and more preferably can range from about 10 to about 160 gram-force. In certain embodiments, the retraction force is about 20 gram-force to about 40 gram-force. In other embodiments, the retraction force is about 30 gram-force to about 50 gram-force. Other ranges than those described above can also be used. The tubular body 16 and the tip body 30 can be of the same or different outer and inner diameters. The proximal end 14 of microcatheter 10 can be provided with a manifold 18. Manifold 18 can be provided with at least one access port 20 in fluid communication with a distal access port 24 by way of an elongate central lumen 22. Central lumen 22 allows for the microcatheter 10 to track over a guidewire (not shown). After removal of the guidewire, the central lumen 22 may be used to deliver an embolic agent to the desired vascular site.

[0038] To further assist in the delivery of the embolic agent to the desired vascular site, the tip body 30 may optionally contain a plurality of lateral apertures or holes 38. The shape of the apertures 38 can be selected from round, elliptical, or other shapes.

[0039] Also shown in Fig. 1B is the central lumen 22. Although not specifically illustrated, the microcatheter may contain a plurality of lumens. For example, one lumen may be dedicated for use by a guidewire, while another lumen may be dedicated to delivery of the embolic agent. The microcatheter 10 can contain a marker 32, for example a radiopaque marker, located on the distal end 34 of the tubular body 16. The marker 32 can be a ring or band made from a metal or metal alloy, such as platinum, platinum/iridium, gold, nitinol and the like.

[0040] Fig. 2A shows the use of the microcatheter 10 within the human body. Specifically, the microcatheter 10 is inserted into the patient in a convenient location, such as the groin. Various positioning systems can be used, such as a guide microcatheter, and a

guidewire may also be employed to assist with the positioning. The microcatheter 10, or another microcatheter described herein, can be moved through the vascular until the tip body 30 reaches a treatment site 40, such as for example an AVM or aneurysm. The position of the microcatheter 10 can be monitored by visualizing the radiopaque marker 32. Once the microcatheter 10 is in its appropriate position in the vasculature, embolic agent 42 can be delivered to the treatment site 40. The embolic agent 42 can be a liquid embolic agent and can comprise of a number of materials. Suitable embolic agents 42 include those containing biocompatible polymers and prepolymers which polymerize *in situ*. The liquid embolic agent can also comprise a biocompatible solvent and a contrast agent. In one embodiment, the contrast agent is water-insoluble. One such example is Onyx®, a non-adhesive liquid embolic agent comprised of EVOH (ethylene vinyl alcohol) copolymer dissolved in DMSO (dimethyl sulfoxide) and suspended micronized tantalum powder to provide contrast for visualization under fluoroscopy. Further description of suitable embolic agent are described in U.S. Patents 5,667,767; 5,695,480; 6,051,607; 6,342,202; 6,531,111; and 6,562,317 all of which are incorporated by reference herein and made a part of this specification.

[0041] Referring to Fig. 2A, after delivery of the embolic agent 42, the tip body 30 can be entrapped within the agent 42. In certain embodiments, the sleeve 26 can also be entrapped or partially trapped by the agent 42. To remove the microcatheter 10 from the patient, the attending clinician can apply a retraction force to the tubular body 16. When the retraction force is applied, the thermoplastic sleeve 26 can either 1) remain attached to the tip body 30 (Fig. 2B); 2) remain attached to the tubular body 16 (Fig. 2C); or 3) break into two components thereby remaining partially attached to both the tubular body 16 and the tip body 30 (not shown).

[0042] Similarly, the microcatheter 10, or another microcatheter described herein, can be used to treat an arteriovenous malformation (AVM). Figure 2D illustrates an example of an AVM, and Figure 2E illustrates how the microcatheter 10 can be moved to the AVM site to deliver embolic agent 42 to the site. Similar to Figures 2A-C, the tip 30 can be detached through use of the sleeve 26 and a retraction force.

[0043] The location of the sleeve 26 after application of the force can be influenced by the construction of how the sleeve 26 is engaged to the tip body 30 and the

tubular body 16 (see Fig. 3). The engagement of the tip body 30 to the sleeve 26 and the engagement of the tubular body 16 to the sleeve 26 can be accomplished in variety of ways. For example, the sleeve 26 can overlap with a distal end 34 of the tubular body 16 (see Fig. 4) and/or can overlap with a proximal end 36 of the tip body 30 (see Fig. 5). The amount of overlap can be a factor in determining the retraction force used for detaching the tip body 30. In some embodiments, one or both attachments of the sleeve 26 to the tip body 30 or the tubular body 16 can be a butt joint (end to end). In some embodiments, the distal end 34 and proximal end 36 can form a butt joint.

[0044] One advantage of the microcatheters described herein is the ability to have a low and consistent detachment force while maintaining a high burst strength. In addition to the use of the sleeve 26 to detachably engage the tip body 30 to the tubular body 16, this advantage can also be accomplished by the materials selected for the tubular body 16 and the sleeve 26, the overlap length of the sleeve 26 with the tubular body 16 and the tip body 30, and/or the construction of affixing the sleeve 26 to the tubular body 16 and the tip body 30.

[0045] The tubular body 16 can be constructed of a variety of materials and in a variety of ways known in the art to optimize the burst strength. In one embodiment, the tubular body 16 can be constructed of a material that is compatible with dimethylsulfoxide. The tubular body 16 can also contain zones with varying flexibility which can also be controlled by the methods of construction and materials employed. It can be desirable to have a more flexible zone at the distal end of the tubular body 34. Description of the construction of the zones can be found in U.S. Patent 5,843,050, which is hereby incorporated by reference and made a part of this specification. The tubular body 16 can be constructed by layering various polymers, such polyimide, polytetrafluoroethylene, polyether block amides, polyamide and the like. The tubular body 16 can also optionally include a braid of varying pitches to enhance the burst strength. Description of the braid can be found, for example, in U.S. Publ. 2004-0153049, which is hereby incorporated by reference and made a part of this specification.

[0046] The tip body 30 can be made from a biocompatible material. What is meant by "biocompatible" is that the material, in the amounts employed, are substantially non-toxic and substantially non-immunogenic when used internally in the patient. A

biocompatible material can include shrink-tubing polymers, for example, polyethylene block amides, including those branded Pebax®.

[0047] In certain embodiments, the tip body 30 can also be "biodegradable." A wide variety of biodegradable/bioerodable and non-biodegradable materials are known which are useful for constructing microcatheter tips. The tip body 30 can be formed of a material which is biodegradable or bioabsorbable *in situ*. Biodegradable or bioabsorbable materials, or some combination thereof, can be used which allow for the biodegradation/bioabsorption in predetermined conditions.

[0048] A variety of biocompatible-biodegradable materials are commercially available. The general criteria for selecting a polymer for use as a biomaterial is to match the mechanical properties and the time of degradation to the needs of the application. Polymeric substances which may be used are set forth in U.S. Patent No. 4,938,763. For example, the following polymers are biocompatible as well as biodegradable:

DLPLA — poly(dl-lactide)

LPLA — poly(l-lactide)

PGA — polyglycolide

PDO — poly(dioxanone)

PGA-TMC — poly(glycolide-co-trimethylene carbonate)

PGA-LPLA — poly(l-lactide-co-glycolide)

PGA-DLPLA — poly(dl-lactide-co-glycolide)

LPLA-DLPLA — poly(l-lactide-co-dl-lactide)

PDO-PGA-TMC — poly(glycolide-co-trimethylene carbonate-co-dioxanone)

[0049] One such class of absorbable material which may be suitable is the polyhydroxyalkanoate class of biopolymers ("PHA"). For example one such PHA is produced recombinantly, and branded TephaFLEX polymer, currently available from Tepha, Inc. Cambridge MA, USA.

[0050] The sleeve 26 can be comprised of a thermoplastic material or a material that is heat-shrinkable. The thermoplastic selected is ideally complimentary to the tubular body 16 material and may be either filled or unfilled. The sleeve 26 can comprise more than one thermoplastic material. Examples include thermoplastic polyolefin elastomer (TPE);

acrylic; celluloid; cellulose acetate; ethylene-vinyl acetate (EVA); ethylene vinyl alcohol (EVAL); fluoroplastics (PTFE, FEP, PFA, CTFE, ECTFE, ETFE); ionomers; acrylic/PVC alloy; liquid crystal polymer (LCP); polyacetal (POM or Acetal); polyacrylonitrile (PAN or acrylonitrile); polyamide (PA or Nylon); polyaryletherketone (PAEK or Ketone); polybutadiene (PBD); polybutylene (PB); polycaprolactone (PCL); polychlorotrifluoroethylene (PCTFE); polyhydroxyalkanoates (PHAs); polyketone (PK); polyester; low density polyethylene (LDPE); linear low density polyethylene (LLDPE); polyethylene (PE); polyetherimide (PEI); polyethersulfone (PES); polysulfone; polyethylenechlorinates (PEC); polylactic acid (PLA); polymethylpentene (PMP); polyphenylene oxide (PPO); polyphenylene sulfide (PPS); polyphthalamide (PPA); polypropylene (PP); polystyrene (PS); polyvinyl chloride (PVC); polyvinylidene chloride (PVDC); and combinations thereof.

[0051] The sleeve 26 can be filled or not filled with a radiopaque material, such as barium sulfate.

[0052] In one embodiment, the thermoplastic is a thermoplastic elastomer. In one embodiment, the thermoplastic is a heat shrinkable polyolefin, such as polyethylene and in another embodiment the thermoplastic is a low density polyethylene and polyolefin elastomer (DuPont Engage®) blend.

[0053] As mentioned above, the ability to detach the tip body 30 from the tubular body 16 can be influenced by the construction of the microcatheter 10 and particularly, the construction of detachably engaging the sleeve 26 to the tip body 30 and the tubular body 16. The total length of the microcatheter 10 can generally be in the range of form about 150 cm to about 175 cm, although other ranges are also possible. The tubular body 16 can be selected to have an outside diameter within the range of from 0.5 mm to about 1.5 mm, although other diameters are also possible. In some embodiments, the diameter of the central lumen 22 can be about 0.002 to about 0.005 inches larger than the outside diameter of the guidewire, if one is used. This diameter can be modified appropriately at the proximal and distal ends. Other dimensions than those described herein can be readily utilized by those of ordinary skill in the art in view of the disclosure herein to suit particular intended uses of the microcatheter 10.

[0054] The tubular body 16 and tip body 30 can be provided as described above. The sleeve 26 can then be provided and detachably engaged to the tubular body 16 and the tip body 30 by applying a controlled temperature heat source for a designated time at the juncture of the sleeve 26 and the tubular body 16 and the tip body 30. The time that the heat source is applied, as well as the temperature, can influence the bond that forms between the sleeve 26 and the other components. When the heat source is applied, the sleeve 26 can attach to the tubular body 16 and the tip body 26 by either a mechanical bond (force of the heat shrinking around the smaller microcatheter and tip body) or a fused bond (where the materials of the sleeve, the tubular body, and/or the tip body are melting together). The bond can be a weaker tensile strength bond to allow the tip body 30 to detach from the tubular body 16 upon application of a retraction force of about 10 to about 160 gram-force, preferably about 20 to 50 gram-force.

[0055] In an alternative method of construction, the sleeve 26 can be attached to the tip body 30 and/or tubular body 16 by use of adhesives or solvents.

[0056] As described above, there can be varying amounts of overlap of the sleeve 26 with the tubular body 16 and/or the tip body 30. The amount of overlap can be one factor in the retraction force required to separate the tip body 30 from the tubular body 16. The larger the overlap of the sleeve 26 on either the tubular body 16 and/or the tip body 30, the greater the retraction force required to detach the two components. In some embodiments, this overlap can be from about 0.5 to about 5 mm. In some embodiments, the overlap can be about 2 to about 4 mm. Other overlap ranges are also possible.

[0057] A kit comprising a microcatheter 10, or other microcatheter described herein, and a liquid embolic agent as described above can be provided.

[0058] With reference to Figures 6-8, a microcatheter 110 can be similar to the microcatheter 10 described above. Therefore, similar components of the microcatheter 110 are referenced by the same reference numeral as the corresponding component in the microcatheter 10, incremented by one hundred.

[0059] With reference to Figure 7A, a tip detachment area can comprise a tubular body 116, a thermoplastically fitted sleeve 126, and a tip body 130. The thermoplastic sleeve 126 can be fitted over a distal end 134 of the tubular body 116 and proximal end 136 of the

tip body 130, similar to sleeve 26 described above. In some embodiments, the sleeve 126, or any sleeve described herein, can be frictionally engaged with both the tubular body 116 and tip body 130 prior to detachment, and can form a tighter frictional engagement with the tubular body 116 than with the tip body 116. Once a retraction force is applied, the sleeve 126 can thus tend to remain on the tubular body 116, thus leaving the tip body 130 behind.

[0060] With continued reference to Figure 7A, the tubular body 116 can comprise a marker 132. The marker 132 can be positioned such that it lies underneath the sleeve 126, thereby identifying a position of the sleeve 126 and tip body 130 prior to detachment of the tip body 130.

[0061] Figure 7B illustrates an alternative embodiment of a sleeve 126'. The sleeve 126' can be similar to the sleeve 126 described above, except the sleeve 126' can include an internal separation element 127. The internal separation element 127 can be designed to separate the distal end 134 and proximal end 136 of the tubular body 116 and tip body 130, respectively, while still allowing embolic agent to flow through the microcatheter. The separation described above can inhibit the distal end 134 and proximal end 136 from contacting one another and/or sticking or adhering to one another after heating of the thermoplastically fitted sleeve 126'. If the distal end 134 and proximal end 136 stick to one another, the amount of detachment force required to separate them can increase. Thus, the separation element 127 can facilitate reduced detachment forces. The separation element 127 can be formed integrally with the sleeve 126', or can be attached or inserted separately. The separation element 127 can comprise a variety of materials, including but not limited to metal or plastic, and in some embodiments can be in the shape of a washer.

[0062] Figure 7C illustrates another alternative embodiment of a sleeve 126''. The sleeve 126'' can be similar to the sleeves 126' and 126'' described above, except that the sleeve 126'' can comprise two discrete components 128a and 128b. The components 128a and 128b can be mirror images of one another, and can be attached (e.g. adhered together or held together) to form the sleeve 126''. As with the sleeve 126', the sleeve 126'' can include separation elements 127 which can be used to separate the distal end 134 and proximal end 136 of the tubular body 116 and tip body 130.

[0063] With reference to Figure 8, the tip body 130 can also comprise a marker 133. The marker 133 can be a radiopaque marker located along a portion of the tip body 130, and can be used to identify a position of the tip body 130 prior to and/or after detachment of the tip body 130 from the tubular body 116.

[0064] With reference to Figure 9, a chart illustrating the relationship between static burst strength and detachment force for the microcatheter of Figures 6-8 is provided. Static burst strength, as described above, generally describes an internal pressure (for example applied by embolic liquid within the catheter) which can cause radial bursting of the microcatheter. Static burst strength is that pressure at which the microcatheter's tubular wall bursts. It is generally desired to have a high static burst strength, so as to limit the possibility of the microcatheter bursting during use. If the static pressure is raised high enough, this internal pressure can cause the microcatheter to burst, or break. Static burst strength can be tested, for example, by clamping or otherwise securing both ends of a microcatheter tube, injecting liquid into the microcatheter, and allowing the static pressure inside the microcatheter to press radially against the tubular wall. Static burst strength can also be tested at various stages, for example, prior to a first use of the device and/or after use of the device for a given period of time (e.g. after pushing embolic agent through the microcatheter 110 during a simulated one hour procedure). Generally, prior to first use a higher burst strength can be achieved for a given detachment force. Figure 9 represents a static burst test conducted after approximately one hour of simulated use of the microcatheter 110.

[0065] Detachment force, as described above, generally describes an axially applied tensile force required for detaching the tip body 130 from the tubular body 116. Detachment force can be applied by the user, for example by pulling proximally on a proximal end of the tubular body 116. It is generally desired to have a low detachment force, so as to limit the amount of force required to detach the tip body 130.

[0066] One potential problem when dealing with burst and detachment at the same time is the possibility of bursting at the intersection between the tubular body 116 and the tip body 130. Thus, a mechanism such as one of the sleeves described above can act to both inhibit bursting of the microcatheter 110, while facilitating detachment of the tip body

130. For example, the sleeve 26, 126, 126', or 126'' can allow for a desired detachment force while maintaining a high burst strength.

[0067] As the chart in Figure 9 illustrates, in one embodiment the detachment force for maintaining a static burst strength between approximately 50 and 400 psi can range from approximately 20 to 40 gram-force while using the sleeve 126'. Thus, if the sleeve 126' is thermoplastically fitted around the tubular body 116 to such a degree that the retraction force required for detachment increases (i.e. a tighter fit), so too will the amount of static pressure required to burst the microcatheter radially. In certain embodiments, the microcatheter 10 or 110 can be designed to have a sufficiently high burst strength, for example in the range of about 150 psi to 450 psi, and more preferably at least 250 psi, with an associated desired detachment force for example between about 24 and 54 gram-force, and in certain embodiments no more than about 40, 35, 30 or 25 gram-force. In certain embodiments, the microcatheter 10 or 110 can exhibit a burst strength of between about 150 psi to 225 psi with detachment forces less than about 30 gram-force. In certain embodiments, the microcatheter 10 or 110 can exhibit a burst strength of about 275 psi at a detachment force between about 32 to 33 gram-force.

[0068] The microcatheters 10 and 110 described above include thermoplastically fitted sleeves 26, 126, 126' and 126'' which are used for detachably engaging the tubular bodies and tip bodies of the microcatheters. Thermoplastically fitted sleeves can provide an advantage over other types of structures or systems for detachably holding a tip body to a tubular body of a microcatheter. For example, metallic sleeves (e.g. metallic rings) can be used which require an adhesive to bond the ring to the distal end of the tubular body and tip body. However, the adhesive used with such metallic rings could undesirably deteriorate, allowing the metallic ring to dislodge from the microcatheter and become an emboli in the patient's body. Additionally, using adhesive in this manner requires that the adhesive be broken down before detachment. If the adhesive is broken down by the embolic agent itself, the procedure of detachment can become time-dependent and take longer than desired, or in some cases could be unpredictable in terms of the time required for detachment. Additionally, the retraction force needed to detach the tip body could vary, depending on the amounts of adhesive used, the consistency of the adhesive used, the application of the

adhesive, etc. In contrast, the microcatheters described above have the advantage of utilizing a single retraction force to quickly, efficiently, and consistently detach the tip body from the tubular body of the microcatheter.

[0069] Furthermore, in some embodiments the sleeves 26, 126, 126', and 126'' described above can have length (e.g. axially along the inner lumen) to outer diameter ratios which provide a further advantage in inhibiting bursting of the microcatheters 10 or 110. For example, in certain embodiments, the sleeve 126' can have a length to outer diameter ratio of approximately 8:1 at a distal end, and 9:1 at a proximal end. Other ratios are also possible. In certain embodiments, the length to outer diameter ratio is at least 6:1 or 7:1. Ratios for example as large as 8:1 or 9:1 can provide added stability to the microcatheter, and inhibit bursting by providing greater coverage or overlap along the tubular body 116 and tip body 130.

[0070] Additionally, having a length to outer diameter ratio which is larger on the proximal end as compared to the distal end of the sleeve 126' can facilitate a tighter fit of the sleeve 126' about the tubular body 116 as compared to the tip body 130. This difference in fit can facilitate detachment of the tip body 130, while allowing the sleeve 126' to remain attached to the tubular body 116 after detachment.

[0071] With reference to Figure 10-15, other types of detachable tip catheters can be used to deliver an embolic agent. The components of the catheters illustrated in Figures 10-15 and described herein can, at least in some embodiments, be used with the catheters 10 and 110 described above.

[0072] As described above, catheters are generally constructed according to known principles of catheter design and typically consist of a proximally-disposed rigid section, an intermediate semi-flexible section, and a distal flexible portion designed to facilitate negotiation of the small, tortuous vessels expected to be encountered during each particular medical application. The distal end of a catheter can contain one or more radiopaque markers to aid a clinician in visualization of the catheter location during a medical procedure. Typically, the radiopaque markers are positioned at fixed distances from the distal end of the catheter. For example, one radiopaque marker can be optionally placed proximally adjacent to a tip detachment area in order to aid the clinician in visualizing the

catheter and anatomical sequela of the medical procedure (e.g., embolization) and tip detachment.

[0073] Some catheters comprise a unibody catheter with a detachable tip. The term "unibody", as used herein, is a broad term referring generally to a catheter or component that is manufactured as a single element. It is recognized that a "unibody catheter" does not imply that the entire catheter device consists of a single element. Rather, a "unibody catheter" refers to the unibody construction of a portion of the distal end of the catheter, including a predetermined detachment area and detachable tip region.

[0074] The predetermined tip detachment area may be, in essence, a weak or rigid portion of the catheter body. Put another way, the predetermined tip detachment area may be less resilient with applied force than the tubular body. This unibody construction can be similar to traditional catheter tip design except that the weak/rigid construction of the predetermined detachment point controls the location of breakage. This design improves upon existing unibody catheter tip construction in which the tip is substantially uniform and breakage occurs randomly along the catheter tip body, upon the application of excessive force. In practice, the catheter can deform while inserted into the patient, particularly in a microvasculature environment. The catheter can be relatively inflexible or flexible at the predetermined tip detachment area. Thus the catheter tip can selectively detach at this predetermined area due to the detachment area having a lower tensile strength than the adjacent tubing.

[0075] Resilience properties of the predetermined detachment area, such as elasticity (reversible deformation) or plasticity (non-reversible deformation) can be calculated to occur per unit force at a predetermined tubular body location largely based on the physicochemical properties of the materials and the conditions under which the catheter is used.

[0076] In one configuration, the predetermined detachment area can be made of the same material as the catheter, but the detachment area is thinner than the adjacent portions of the catheter, providing a weakened point susceptible to breakage upon the application of an appropriate (e.g., retraction) force. The relative weakness of the detachment area, and the concomitant difference in thickness of the catheter wall can be modified in

order to facilitate detachment (i.e., breakage) upon application of the desired amount of force. Typically, the detachment area will be at least 10%, 20%, 30%, 40%, 50%, 65%, or 80% thinner than the adjacent catheter wall.

[0077] Alternatively, the predetermined detachment area can be constructed of a different material than the proximally adjacent catheter body. As described above, the detachment area can be weaker and/or more rigid than the catheter body immediately proximal to it in order that the catheter preferentially breaks at the detachment area. The catheter tip body (i.e., distal to the detachment area) can be the same material as the catheter body, the same material as the detachment area, or a different material.

[0078] Figure 10 is a schematic illustration of a unibody catheter 210 having a detachable tip constructed according to the principles described above. The catheter 210 forms a tubular body consisting of substantially parallel walls 214 forming a lumen 212. The material of the catheter walls 214 are weakened at the detachment area 218. This weakening of the detachment area 218 can be a thinning of the catheter wall 214 material, a different (weaker or more rigid) material compared to the catheter wall 214 material. The detachable tip 216 can be the portion of the catheter 210 that is distal to the detachment area 218 and is detached with the breakage of the catheter 210 at the detachment area 218 upon application of predetermined force to the catheter 210. A marker 215 can be positioned just proximal to the detachment area 218 and preferably is positioned within 1 centimeter of the detachment area 218.

[0079] Figure 11 shows an alternative embodiment of a unibody catheter 220 having a predetermined detachment area. In this alternative embodiment, a detachment ring 228 is embedded in the catheter wall 214 at the predetermined detachment area 218. The detachment ring 228 can serve as point of weakness which effects detachment of the tip 216. Alternatively, the detachment ring 228 can be attached to a guidewire (not shown), under control of the operator which, when effected, causes catheter 220 breakage at the detachment area 218. Typically, the detachment ring 228 can be designed to remain with the distal catheter wall 214, but it can also be designed to detach and remain with the tip 216. Again, marker 215 can be positioned just proximal to the detachment area 218 and preferably can be positioned within 1 centimeter of the detachment area 218.

[0080] In some embodiments the tip 216 can be detached via electrolytic detachment. A ring of electrically resistive material can be imbedded in the catheter at the detachment area 218. When an electrical current is passed through the ring, the resistive material can heat, melting the catheter at the detachment area 218 and releasing the tip 216.

[0081] Some catheters can have detachable tips which are separately manufactured and affixed to the distal end of the catheter. The detachable tips can be constructed of the same or different material as the catheter body. Biodegradable/bioerodable detachable tips, as described herein, are preferred.

[0082] Optionally, the distal end of the catheter can be configured to receive a detachable tip. The design of the catheter and tip can facilitate separation upon application of a predetermined amount of force.

[0083] Figure 12 shows one embodiment of a catheter 230 with a separate detachable tip 236. The distal catheter end is enlarged to form a flange 238 and the detachable tip 236 is fitted over the flange as an integral concentric coupling (i.e., in a sleeve-like fashion). Optionally, the distal catheter end does not contain a flange or other specialized receiving structure (i.e., has substantially the same outer diameter as the adjacent portion of the distal catheter). The tip 236 can be weakly bonded or press or heat fitted (such as heat welded or shrink-wrapped) to the tubular body of the catheter, with a predetermined bond strength allowing for a predetermined force for removal, similar to sleeves 26 and 126 described above.

[0084] The tip 236 can be fitted with a "locking" design such that the tip 236 is protected from inadvertent removal until a predetermined time. Where the catheter tip 236 reaches the desired location, the tip 236 can be "unlocked" from the underlying catheter body. A type of lock, such as an undercut, flange-lock, or luer-lock, or other means as available in the state of the art can be used. The unlocking means can be mechanical, or it can be fully or partially electronic, such as remote means for instituting the mechanical unlocking as described more fully herein. Thus, as a separate element, the tip 236 can have as a surface feature a protrusion or intrusion capable of forming a lockable assembly with the catheter tubular body.

[0085] In another embodiment, the catheter can contain a predetermined detachment area as described herein and the separate tip can be attached to the catheter distal to the detachment area. In this embodiment, the force required to cause structural failure (breakage) at the predetermined detachment area can be less than the force required to detach the tip from the catheter.

[0086] For most *in vivo* uses of the catheters described herein, including catheters 10 and 110, the tip (i.e. tip body) can be designed to be detached upon the application of a force of about 10 to about 160 gram-force, although the force can depend largely on the environment and characteristics of the catheter and tip. Typically, the detaching force can be applied by retraction of the catheter with a force sufficient to effect tip detachment. The detachment force can be selected such that the tip will not detach under conditions of normal catheter use (i.e., normal traction associated with positioning the catheter), but will detach with a smaller amount of traction force than would be expected to damage the vessel in which the catheter is placed. This is a particularly important consideration when the tip is trapped (accidentally or by design) in an embolic polymer or under conditions of vasospasm.

[0087] Detachable tips can be designed to be purposely embedded in the embolic polymers. In one design, as shown in Figure 13, the tip can contain one or more "side holes" 243 in order that embolic agent (e.g. embolic polymer) or other injected material flows laterally out of the catheter 240. Such a tip can have only side holes 243, or can have both side holes 243 and a standard terminal opening 245 at a distal terminus of the catheter tip 216. In practice, such a tip can be used to deliver an amount of the embolic polymer first from a side hole 243 which is first allowed to harden, followed by delivery of additional embolic polymer through the terminal opening 245. Desirably, the side hole 243 delivers polymer into an AVM or aneurysmal sac and the terminally-delivered polymer continues to fill an area distal the tip. Such a procedure is designed to entrap the catheter tip in the embolic polymer, necessitating tip detachment. The force required for detachment should be less than would be expected to cause damage to the vessel or dislodge the embolic polymer.

[0088] In general the detachable tip can have other features which are decorative or functional. For example, Figure 14 illustrates a detachable tip 256 with side grips 257. The side grips 257 can be used for mechanical removal via a guidewire looped around the end of

the detachable tip 256. The side grips 257 can be protrusions or invaginations designed to further anchor the tip 256 in an embolic polymer when tip detachment is desired, as described herein. The side grips can also be used to aid in the mechanical retrieval of the tip once it has been detached from the catheter. Alternatively, the design of the grips can add no function apart from decorative to give the medical device an aesthetically pleasing design.

[0089] A wide variety of biodegradable/bioerodable and non-biodegradable materials are known which are useful for constructing catheter tips. For separately manufactured tips, shrink-tubing polymers can be used including, for example, polyethylene block amides, including those branded Pebax®, polyamide, polyolefines, etc.

[0090] Alternatively, the tip can be formed of a material which is biodegradable or bioabsorbable *in situ*. Biodegradable or bioabsorbable materials, or some combination thereof, may be used which allow for the biodegradation/bioabsorption in predetermined conditions.

[0091] A variety of biocompatible-biodegradable materials are commercially available. A general criteria for selecting a polymer for use as a biomaterial is to match the mechanical properties and the time of degradation to the needs of the application. Polymeric substances which can be used are set forth in U.S. Patent No. 4,938,763. For example, the following polymers are biocompatible as well as biodegradable:

DLPLA — poly(dl-lactide)

LPLA — poly(l-lactide)

PGA — polyglycolide

PDO — poly(dioxanone)

PGA-TMC — poly(glycolide-co-trimethylene carbonate)

PGA-LPLA — poly(l-lactide-co-glycolide)

PGA-DLPLA — poly(dl-lactide-co-glycolide)

LPLA-DLPLA — poly(l-lactide-co-dl-lactide)

PDO-PGA-TMC — poly(glycolide-co-trimethylene carbonate-co-dioxanone)

[0092] One such class of absorbable material which can be suitable is the polyhydroxyalkanoate class of biopolymers ("PHA"). For example one such PHA is

produced recombinantly, and branded TephaFLEX polymer, currently available from Tepha, Inc. Cambridge MA, USA.

[0093] In addition, a biodegradation region can be engineered into a wide variety of biocompatible polymers. Hydrolytically unstable linkages can be manufactured into biocompatible polymers, such as including functional groups containing esters, anhydrides, orthoesters, and amides. Enzymatic substrate sites, hydrolysis site, or other chemically (or bio-chemically) breaking sites can be incorporated into a biocompatible polymeric backbone otherwise having desired physico-chemical properties. Environmental degradation sites, such as light or temperature sensitive sites, can also be used. For example, one can employ a chemical moiety which is degraded upon exposure to light, and fiber optic light may be used as the light source for such degradation *in situ*.

[0094] The factors affecting the mechanical performance of biodegradable polymers are those that are well known in the art, and include monomer selection, polymerization initiator selection, process conditions, and the presence of additives. These factors in turn influence the polymer's hydrophilicity, crystallinity, melt and glass-transition temperatures, molecular weight, molecular-weight distribution, end groups, sequence distribution (random versus blocky), and presence of residual monomer or additives. In addition, each of these variables may affect the rate of biodegradation.

[0095] Alternatively, the tip can be formed of a material which is DMSO dissolvable, allowing it to degrade during a procedure using Onyx thereby lowering the detachable tip tensile strength.

[0096] The detachable tips described herein can also optionally be comprised of functional moieties, such as a detectable label or marking/imaging moiety. A detectable label or imaging moiety may be incorporated into the tip composition so that the presence, location, or degree of degradation or absorption may be monitored. The label or imaging moiety should be distinct from any other label or imaging moieties which may be delivered incident to the use of the catheter, so as to distinguish from the catheter delivery and the detachable tip.

[0097] The detachable tip can also contain one or more biologically active moieties, such as a therapeutic moiety. For example, one may wish to deliver an antibiotic or

an analgesic at the location where the tip is removed. Incorporation of a biologically active moiety, including a therapeutically active moiety, into the composition of the detachable tip in essence renders the detachable tip a drug delivery vehicle. The composition of the detachable tip can be selected for a desired pharmacokinetic or sustained duration drug delivery in addition to any therapeutic delivery incident to the catheter use.

[0098] Biologically active moieties may or may not be therapeutically effective. Although a biological activity can occur locally, this can be solely to inhibit, for example, a later condition from developing or as a prophylactic measure. Thus, any individual patient may or may not show therapeutic benefit, as the benefit may be the prevention of a harmful inflammatory response, for example.

[0099] Biologically active moieties can be selected from among: analgesic agents, anti-inflammatory agents, antibacterial agents, antiviral agents, antifungal agents, antiparasitic agents, tumoricidal or anti-cancer agents, proteins, toxins, enzymes, hormones, neurotransmitters, glycoproteins, immunoglobulins, immunomodulators, dyes, radiolabels, radiopaque compounds, fluorescent compounds, polysaccharides, cell receptor binding molecules, anti-glaucomic agents, mydriatic compounds, local anesthetics, and angiostatic agents such as endostatin and related agents.

[0100] The biologically active ingredient can be a cytokine, a peptidomimetic, a peptide, a protein, a toxoid, a serum, an antibody, a vaccine, a nucleoside, a nucleotide, a portion of genetic material, a nucleic acid, or a mixture thereof. In particular, where a catheter tip so removed is left in place at the site of vasculature repair, a tissue repair moiety may be included, such as a moiety involved in wound healing. Wound healing acutely involves the release of growth factors and cytokines, but also involves growth factors and tissue repair proteins, epidermal or vascular growth factors (or analogs thereof, such as recombinantly produced), hematopoietic factors, such as granulocyte colony stimulating factor, stem cell factor, or others and analogs thereof), platelet derived growth factors, fibroblast growth factors, and other naturally occurring or synthetic wound healing moieties. In addition, a blood thinner or anticoagulant, such as coumadin or heparin (or synthetic versions thereof) may be used.

[0101] Additional moieties can include microtubule inhibiting moieties (of which anti-tubulin moieties are a species). Microtubules are necessary for cytoskeletal and therefore cellular growth or division. By inhibiting cellular cytoskeletal growth, one may inhibit inflammatory or other unwanted cellular activity. One may inhibit microtubule growth by preventing inhibiting the tubule formation or by inhibiting the tubule deconstruction. Various microtubule inhibitors include anti-cancer compounds (taxanes and the vinca alkaloids, for example) as well as other synthetic antitubulin or microtubule inhibitors.

[0102] Figure 15 is a schematic side view illustrating a microcatheter 260 in accordance with one embodiment. The microcatheter 260 can comprise a tubular body 262, a detachable tip 264, and means 266 coupling the tip 264 to the tubular body 262. Means 66 can be adapted be able to detach the tip 264 from the tubular body 262.

[0103] The tubular body 262 can include a proximal portion 268 which is closer to an operator of the microcatheter 260, a distal portion 270, and a lumen (not shown) extending from the proximal portion 268 to the distal portion 270. The tubular body 262 can have a substantially uniform wall forming the lumen.

[0104] Detachment means 266 can be designed to be breakable to detach tip 264 from the tubular body 262 for most *in vivo* applications of the microcatheter 260. For example, the detachment means 26 can be breakable upon application of a force of about 10 to 160 gram-force. Alternatively, the detachment means can be designed to be breakable by electrical means. In some embodiments, the detachment means 266 can be an extension of the tubular body 264 and constructed from the same material of the tubular body 262. In such cases, the detachment means 266 can include a side wall that has a thickness smaller than the wall thickness of the tubular body 64. Alternatively, the detachment means 66 can be constructed from a different material from that making the tubular body 62.

[0105] In some embodiments, the detachment means 266 can comprise the sleeve 26 or 126 described above. In some embodiments, the detachment means 266 can be a detachment ring (not shown) that is embedded in the side wall of the tubular body 264. The detachment ring can serve as a point of weakness which affects detachment of the tip 264. The detachment ring can also be coupled to a guidewire (not shown) under control of an operator, which, when effected, causes the detachment of the tip 264 from the tubular body

262. Alternatively, the detachment ring can be made of an electrically resistive material which when an electrical current passes therethrough, heats the tip 264 causing the detachment of tip 64 from the tubular body 62.

[0106] Other embodiments of detachment means 266 are also possible. For example, the detachment means 266 can be a receiving structure such as a flange formed at the distal end of the tubular body 262 into which the tip 264 is fitted, or the detachment means 266 can be a heat or pressure bonding providing a predetermined bond strength between the tip 264 and the tubular body 262. The bonding can be broken upon application of a predetermined force.

[0107] The tip 264 can be provided with a channel (not shown) which is in fluid communication with the lumen of the tubular body and has at least one opening for delivering an embolic agent to a site in the vasculature. The tip 264 can have a plurality of openings 272 on the side wall of the tip for delivering the fluid agent. The tip 264 can also have an opening at the distal end of the tip for delivering the embolic agent. The tip 264 can be constructed from a material that is biodegradable. Alternatively, the tip 264 may be made of a material which is not biodegradable. Various materials, designs, compositions, and functions have been described above in connection with detachable tips, which are equally applicable to the tip 264 in this embodiment.

[0108] A marker or marker band 274 can be provided on the distal portion 270 of the tubular body 262. The marker band 274 can be disposed immediately proximal to the detachment means 266 to assist an operator to visualize the location of the detachable tip 264 and/or the detachment zone 266 inside the vascular system. The marker band 274 can be made of a radiopaque metal which can be identified by for example X-ray imaging. Since the marker band 274 is disposed on the tubular body 262, it remains on the tubular body 272 after the tip 264 is detached from the tubular body 62. As a result, the marker band 274 or the radiopaque metal can be removed out of the patient with the tubular body 62 after delivery of the fluid agent, thus minimizing or eliminating damages to the patient.

[0109] A second marker or marker band 276 can be provided on the tip 264. The additional marker band 276 can be disposed immediately proximal to the distal end of the tip 264 and thus remains at the site of delivery after the tip 264 is detached from the tubular body

262. In cases that the microcatheter 260 is used for delivering an embolic agent for treating an aneurysm, a solid mass can be formed from the embolic agent in situ. As a result, the additional marker band 276 can be embedded in the solid mass at the embolization site and does not enter the systemic fluid of the treated vascular, which is otherwise detrimental to the patient.

[0110] The attachment means can comprise a flange structure adapted to couple the tip body to the tubular body. The tip body can be made of a material that is biodegradable.

ADDITIONAL EXAMPLES

[0111] Presented below are additional examples illustrating methods of use for delivery of an embolic composition. These examples are merely for illustrative purposes, and are not intended to be limiting.

Example 1: Use of Detachable Biodegradable Tip

[0112] This example illustrates how one can embolize a blood vessel using a catheter. The term "embolizing" refers to a process wherein a material is injected into a blood vessel, typically to plug the vessel to stop unwanted blood flow. Materials and methods for embolizing are set forth in U.S. Patent No. 5,695,480, herein incorporated by reference in its entirety and made a part of this specification. Alternatively, materials for embolization can be purchased from ev3 Neurovascular Inc., Irvine, CA, USA. Examples include Onyx® embolic compositions sold as Onyx® 18, 20, 34 and 500 HD embolic compositions. For example, where a human patient has an aneurysm in the brain, embolizing materials set forth in US 6,454,738 can be delivered to the site of the aneurysm via a catheter.

[0113] As noted above, one commercially available embolic agent is Onyx® and its associated kit, the Onyx® Liquid Embolic System sold by ev3 Neurovascular, Inc. (MicroTherapeutics, Inc., Irvine, California, USA).

[0114] The embolic Onyx® compositions in the kits can be non-adhesive liquid embolic agents comprised of EVOH (ethylene vinyl alcohol) copolymer dissolved in DMSO (dimethyl sulfoxide) and suspended micronized tantalum powder to provide contrast for

visualization under fluoroscopy. The Onyx® embolic agents can be both biologically active agents as well as contain a diagnostic or imaging agent.

[0115] In some embodiments, such as with microcatheter 110, it is preferred to use an Onyx® 18 or 34 kit. Onyx® 18 and 34 kits can include a 1.5 ml vial of Onyx® embolic agent, a 1.5 ml vial of DMSO, one DMSO-compatible delivery syringe, and two Onyx® syringes. Onyx® 18 or 34 can be delivered by slow controlled injection through a microcatheter into the aneurysm or other vascular site under fluoroscopic control. The DMSO solvent can dissipate into the blood, causing the EVOH copolymer and suspended tantalum to precipitate *in situ* into a spongy, coherent embolus. The Onyx® 18 or 34 can immediately form a skin as the polymeric embolus solidifies from the outside to the inside, while filling more distally in the vascular site. Final solidification of this material can occur within five minutes.

[0116] A microcatheter having a predetermined tip detachment area as disclosed herein can be used to deliver the Onyx® embolic agent. Immediately proximal to the detachment area, or within the detachment area, can be a marker band. This band, which can be around or in the tubular body, can be continuous or discontinuous. In some embodiments, the microcatheter tubular body can be of uniform elasticity and plasticity except for a region approximately 1 cm from the distal end (e.g. the tip body of a unibody-constructed catheter). In some embodiments, the tip bodies 30 described herein can be between 1-10 cm in length, preferably between 1-6 cm in length, and even more preferably between 1-3 cm in length. Other ranges are also possible. The diameter of the microcatheter tubular body at 1 cm from the distal end can, for example, be between about 0.5 mm and about 1.5 mm. Other diameters and ranges are also possible. Additionally, at a distance, for example, of about 1–10 cm from a distal end of the distal tip the microcatheter body can contain a predetermined detachment area of lower plasticity and elasticity. Optionally this region can be biodegradable.

[0117] The practitioner will recognize that the distances, diameters, and other dimensions described above may vary depending on the type of catheter and the use to which the catheter will be put.

Example 2: Use of Detachable Biodegradable Tip

[0118] The catheter in Example 1 can be used, wherein the predetermined tip detachment area is a separate tip fitted over the distal end of the catheter as a sleeve, as illustrated in Figure 12. The separate tip can be comprised of a biocompatible, biodegradable polymer. The biodegradable polymer can contain enzymatic degradation sites which, in the presence of a suitable enzyme, degrade the tip to bioabsorbable constituents.

Example 3: Use of Detachable Tip Having Grips For Mechanical Retrieval

[0119] A tip as shown in Figure 14, with grippable elements, can be removed from the catheter. A guidewire or other mechanical element can be used to stabilize or retrieve the tip having grippable elements. The tip can then be inhibited from migrating in the systemic circulation or embedding in the vasculature. The tip so stabilized can be kept at its *in situ* location for local deployment of any other moiety, such as an imaging agent or biologically active moiety, if the tip has suitable delivery properties as described herein or known in the art. For example, active agents (such as biologically active agents) can be affixed to the tip non-covalently, for release in an aqueous environment under suitable conditions as is available.

Example 4: Use of Detachable Tip Containing Additional Labeling or Imaging Agents

[0120] A distal tip (or separate detachable tip) can further comprise an additional detectable label or imaging reagent. The practitioner can observe the degradation or subsequent absorption by suitable label detection (e.g., florescent labels detected via light sensor) or imaging viewing (e.g., a contrast agent which can be distinguished from the embolic agent).

Example 5: Use of Detachable Tip Containing Additional Biologically Active Moiety

[0121] A catheter can have a predetermined tip detachment area at, for example, 10 mm from the distal end. The tip portion of the catheter body (or, a separate tip) can be

biodegradable and can act as a sustained release delivery vehicle for biologically active moieties.

[0122] The catheter can be used to selectively deliver an anti-cancer chemotherapeutic agent to a specific location within a patient's body where a tumor is located. After delivery of the primary anti-cancer chemotherapeutic agent, the tip can be deployed at a location proximate to the tumor. The tip can contain a dosage of a second anti-tumor biologically active agent to be released over a selected duration.

[0123] The catheter and compositions described above can also be used in other embolic situations such as in the embolization of AVM's, in the embolization of blood vessels feeding into malignant and non-malignant tumors such as fibroid tumors, treating blood vessels involved in abdominal aortic aneurysms (AAA), and the like.

[0124] Although these inventions have been disclosed in the context of certain preferred embodiments and examples, it will be understood by those skilled in the art that the present inventions extend beyond the specifically disclosed embodiments to other alternative embodiments and/or uses of the inventions and obvious modifications and equivalents thereof. In addition, while several variations of the inventions have been shown and described in detail, other modifications, which are within the scope of these inventions, will be readily apparent to those of skill in the art based upon this disclosure. It is also contemplated that various combinations or sub-combinations of the specific features and aspects of the embodiments can be made and still fall within the scope of the inventions. It should be understood that various features and aspects of the disclosed embodiments can be combined with or substituted for one another in order to form varying modes of the disclosed inventions. Thus, it is intended that the scope of at least some of the present inventions herein disclosed should not be limited by the particular disclosed embodiments described above.

WHAT IS CLAIMED IS:

1. A microcatheter for delivering embolic agent to a vascular site within a patient comprising:

an elongate flexible tubular body having a proximal end, a distal end and at least one lumen extending axially there through;

a tip body having a proximal end and a distal end and a lumen extending axially there through; and

a thermoplastically fitted sleeve covering a portion of both the tubular body and tip body;

wherein the sleeve is frictionally engaged with both the tubular body and tip body, and the tip is detachable from one of the tubular body and tip body by application of a retraction force.

2. The microcatheter of Claim 1, wherein the sleeve forms a tighter frictional engagement with the tubular body than with the tip body.

3. The microcatheter of Claim 1, further comprising a first marker disposed on the distal end of the tubular body under the sleeve for indicating a position of the tip body prior to detachment of the tip body.

4. The microcatheter of Claim 3, wherein the first marker is a radiopaque marker band on an outer surface of the tubular body.

5. The microcatheter of Claim 1, further comprising a second marker disposed on the tubular body for indicating a position of the tip body after detachment of the tip body.

6. The microcatheter of Claim 1, wherein the tip body comprises a plurality of holes on a side wall of the tip body for delivering the embolic agent to the vascular site.

7. The microcatheter of Claim 1, wherein the sleeve is a thermoplastic selected from the group consisting of thermoplastic polyolefin elastomer (TPE).acrylic; celluloid; cellulose acetate; ethylene-vinyl acetate (EVA); ethylene vinyl alcohol (EVAL); fluoroplastics (PTFE, FEP, PFA, CTFE, ECTFE, ETFE); ionomers; acrylic/PVC alloy; liquid crystal polymer (LCP); polyacetal (POM or Acetal); polyacrylonitrile (PAN or acrylonitrile); polyamide (PA or Nylon);; polyaryletherketone (PAEK or Ketone); polybutadiene (PBD); polybutylene (PB); polycaprolactone (PCL); polychlorotrifluoroethylene (PCTFE);

polyhydroxyalkanoates (PHAs); polyketone (PK); polyester; low density polyethylene (LDPE); linear low density polyethylene (LLDPE); polyethylene (PE); polyetherimide (PEI); polyethersulfone (PES); polysulfone; polyethylenechlorinates (PEC); polylactic acid (PLA); polymethylpentene (PMP); polyphenylene oxide (PPO); polyphenylene sulfide (PPS); polyphthalamide (PPA); polypropylene (PP); polystyrene (PS); polyvinyl chloride (PVC); polyvinylidene chloride (PVDC); and combinations thereof.

8. The microcatheter of Claim 7, wherein the thermoplastic is a polyolefin.

9. The microcatheter of Claim 8, wherein the polyolefin is polyethylene or polyolefin elastomer or combinations thereof.

10. The microcatheter of Claim 1, wherein the retraction force is between approximately 10 to 160 gram-force.

11. The microcatheter of Claim 10, wherein the microcatheter has a static burst strength of between about 150 and 400 psi, and the retraction force is between about 25 and 40 gram-force.

12. The microcatheter of Claim 1, wherein the sleeve comprises an internal separation element.

13. A method for delivering an embolic agent to a vascular site within a patient, comprising:

advancing a microcatheter into the patient, the microcatheter comprising:

an elongate flexible tubular body having a proximal end, a distal end and at least one lumen extending axially there through;

a tip body having a proximal end and a distal end and a lumen extending axially there through; and

a thermoplastically fitted sleeve covering a distal end of the tubular body and a proximal end of the tip body;

placing the tip body at the vascular site;

delivering the embolic agent through the lumen of the tubular body and the lumen of the tip body; and

detaching the tip body from the tubular body by applying a retraction force to the tubular body, the tip body remaining with the embolic agent.

14. The method of Claim 13, wherein the sleeve remains with the tubular body after application of the retraction force.

15. The method of Claim 13, wherein detaching comprises applying a retraction force of between approximately 10 to 160 gram-force to detach the tubular body from the tip body.

16. The method of Claim 13, wherein the microcatheter has a static burst strength of between about 150 and 400 psi, and detaching comprises applying a retraction force of between about 20 to 40 gram-force to detach the tubular body from the tip body.

17. The method of Claim 13, wherein the microcatheter has a static burst strength of between about 150 psi to 225 psi after about one hour of simulated use, with a detachment forces less than about 30 gram-force.

18. The method of Claim 13, wherein the microcatheter has a static burst strength of about 275 psi after one hour of simulated use, with a detachment force between about 32 to 33 gram-force.

19. The method of Claim 13, wherein the sleeve remains with the tip body after application of the retraction force.

20. The method of Claim 13, wherein a portion of the sleeve remains with the tip body and the remainder of the sleeve remains with the tubular body.

21. The method of Claim 13, wherein the liquid embolic agent comprises a biocompatible polymer, a biocompatible solvent, and a water-insoluble contrast agent.

22. The method of Claim 21, wherein the biocompatible polymer is ethylene vinyl alcohol copolymer, the biocompatible solvent is dimethyl sulfoxide, and the contrast agent is tantalum.

23. The method of Claim 13, further comprising using at least one marker band on the distal end of the tubular body and at least one marker band on the distal tip to indicate the position of the tip body prior to and after detachment.

24. The method of Claim 13, wherein the vascular site is an arteriovenous malformation.

25. A microcatheter comprising:

a tubular body having a proximal portion, a distal portion, and a lumen extending from the proximal portion to the distal portion for introducing a fluid agent;

a tip body coupled to the distal portion of the tubular body for delivering the fluid agent to a site in the vasculature of a patient;

detachment means disposed between the distal portion of the tubular body and the tip body for detaching the tip body from the tubular body after delivery of the fluid agent; and

a first marker, said first marker is disposed on the distal portion of the tubular body immediately proximal to the detachment means for indicating a position of the tip body before the tip body being detached, and remains on the tubular body after the tip body being detached to be removed out of the patient with the tubular body.

26. The microcatheter of Claim 25 wherein said detachment site has a lower tensile strength than the adjacent tubing of the catheter.

27. The microcatheter of Claim 25 wherein said first marker is a radiopaque marker band on the outer surface of the tubular body.

28. The microcatheter of Claim 25 wherein said tip body comprises a plurality of holes on the side wall for delivering the fluid agent.

29. The microcatheter of Claim 25 wherein said tip body comprises a hole on a distal end of the tip body for delivering the fluid agent.

30. The microcatheter of Claim 25 further comprising a second marker which is disposed immediately proximal to a distal end of the tip body providing an indication of a position of the tip body after or before the tip body is detached from the tubular body.

31. The microcatheter of Claim 25 wherein said tip body is made of a biodegradable material.

32. The microcatheter of Claim 25 wherein said detachment means comprises a tubular member made of a same material of the tubular body and having a wall thickness that is at least 10 percent smaller than a wall thickness of the tubular body.

33. The microcatheter of Claim 25 wherein said detachment means comprises a structure that is breakable by mechanical or electrical means.

34. The microcatheter of Claim 25 wherein said detachment means comprises a receiving structure into which the tip body is fitted.

35. The microcatheter of Claim 25 wherein said detachment means comprises a thermal bonding or a pressure bonding that provides a predetermined bonding strength between the tip body and tubular body.

36. The microcatheter of Claim 25 which is adapted to deliver an embolic agent for treating an aneurysm.

37. A neuromicrocatheter for delivering a fluid embolic agent to a site in the neurovasculature of a patient, comprising:

an elongated tubular body having a proximal portion, a distal portion, and a lumen extending from the proximate portion to the distal portion for introducing a fluid embolic agent;

a tip body coupled to the distal portion of the tubular body for delivering the embolic agent from said lumen to a site in the neurovasculature of a patient;

detachment means disposed between the distal portion of the tubular body and the tip body and adapted to detach the tip body from the tubular body after delivering the embolic agent;

a first marker disposed on the distal portion of the tabular body immediately proximal to the detachment means providing an indication of a position of the tip body before being detached, said first marker remains on the tubular body to be removed out of the patient after the tip body being detached; and

optionally a second marker disposed immediately proximal to a distal end of the tip body providing an indication of a position of the tip body after and/or before the tip body is detached.

38. The microcatheter of Claim 37 in which said tip body comprises a plurality of holes on the side wall of the tip body for delivering the embolic agent to the site in the neurovasculature.

39. The microcatheter of Claim 37 in which said tip body is made of a material that is biodegradable.

40. The microcatheter of Claim 37 in which said detachment means is breakable by electrical or mechanical means.

41. A microcatheter kit comprising:

a tubular body having a proximal portion, a distal portion, and a lumen extending from the proximal portion to the distal portion for introducing a fluid agent;

a tip body adapted to be coupled to the distal portion of the tubular body for delivering the fluid agent from the lumen to a site in the neurovasculature in a patient;

attachment means for coupling the tip body to the distal portion of the tubular body, said attachment means is adapted to detach the tip body from the tubular body after delivery of the fluid agent;

a first marker disposed on the distal portion of the tubular body immediately proximate to the attachment means to provide an indication of a position of the tip body in the neurovasculature; and

optionally a second marker disposed immediately proximate to a distal end of the tip body.

42. The microcatheter kit of Claim 41 further comprising a second marker, said second marker is disposed on a distal end of the tip body to provide an indication of a position of the tip body before and/or after the tip body is detached from the tubular body.

43. The microcatheter kit of Claim 41 wherein said tip body comprises a plurality of holes on the side wall of the tip body.

44. The microcatheter kit of Claim 41 wherein said attachment means comprises a receiving structure into which the tip body is fitted.

45. The microcatheter kit of Claim 41 in which said tip body is made of a material that is biodegradable.

46. A method for controlled detachment of a catheter tip embedded in an embolized vascular site which method comprises:

selecting a catheter having a detachment zone proximate to the catheter tip and further placing a marker band proximal to the detachment zone such that visualization of the position of the detachment zone in vivo can be made;

placing the catheter tip into the vascular site to be embolized using a fluid composition which forms an embolizing mass wherein during embolization the catheter tip becomes embedded in the embolizing mass;

identifying the position of the detachment zone in vivo by locating the marker band proximal to the detachment zone and determining whether the marker is outside the embolizing mass; and

detaching the catheter at the detachment zone.

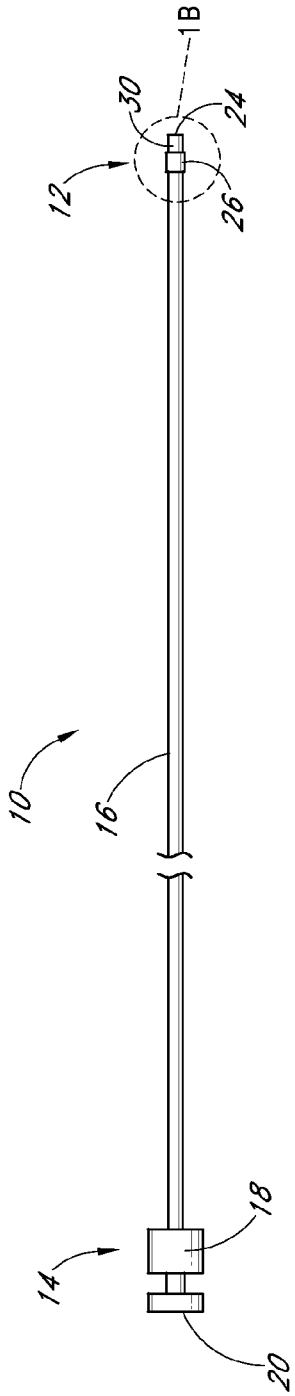

FIG. 1A

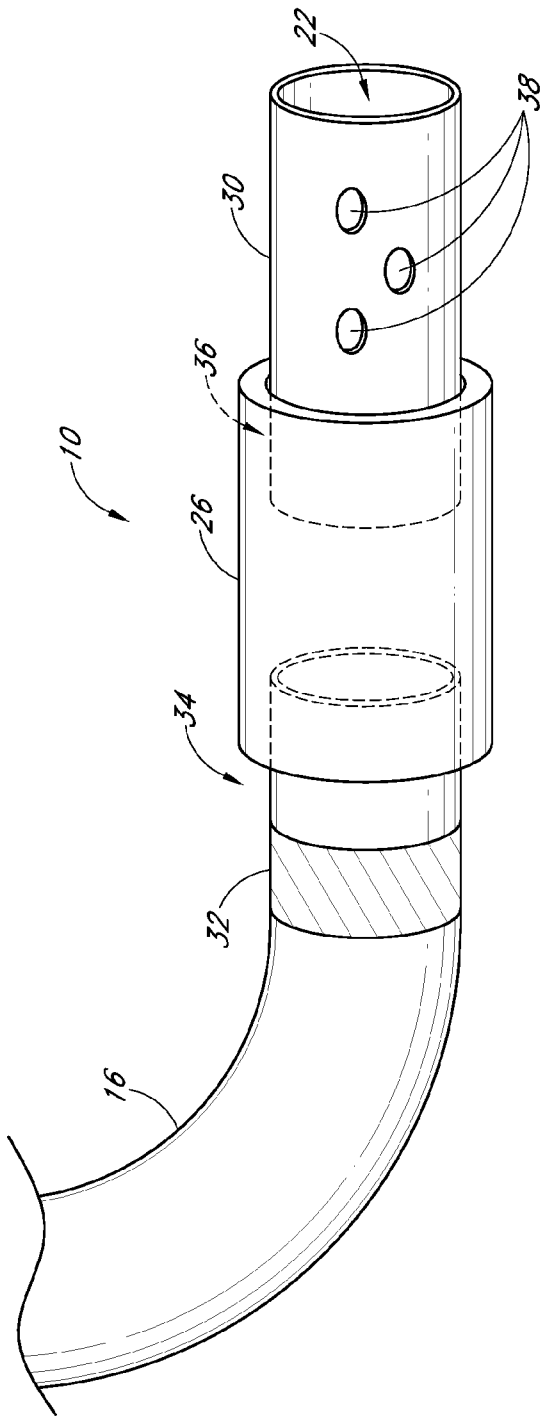

FIG. 1B

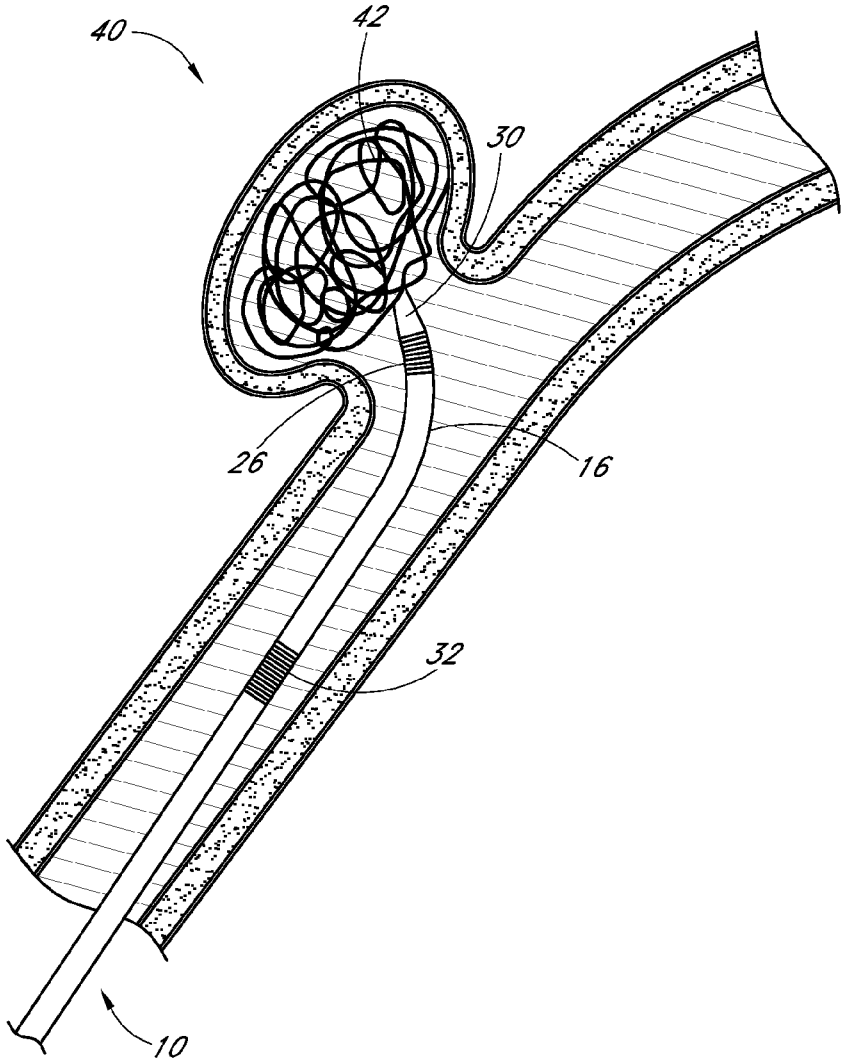

FIG. 2A

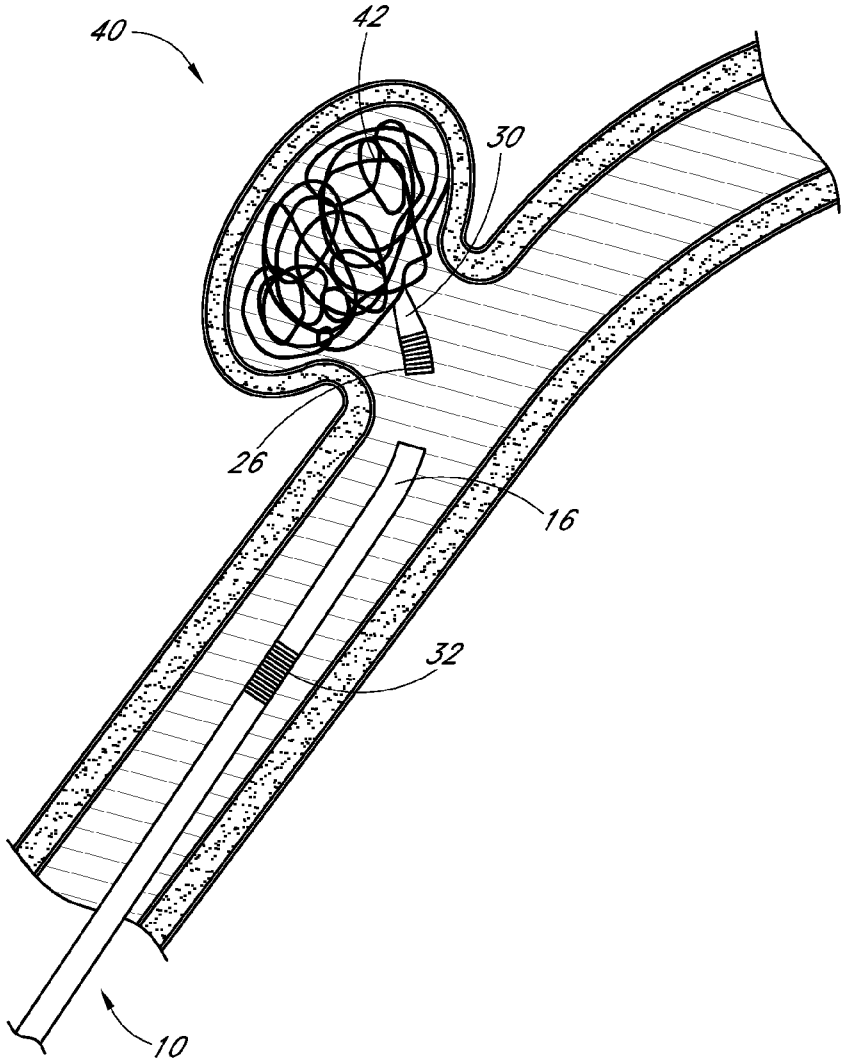

FIG. 2B

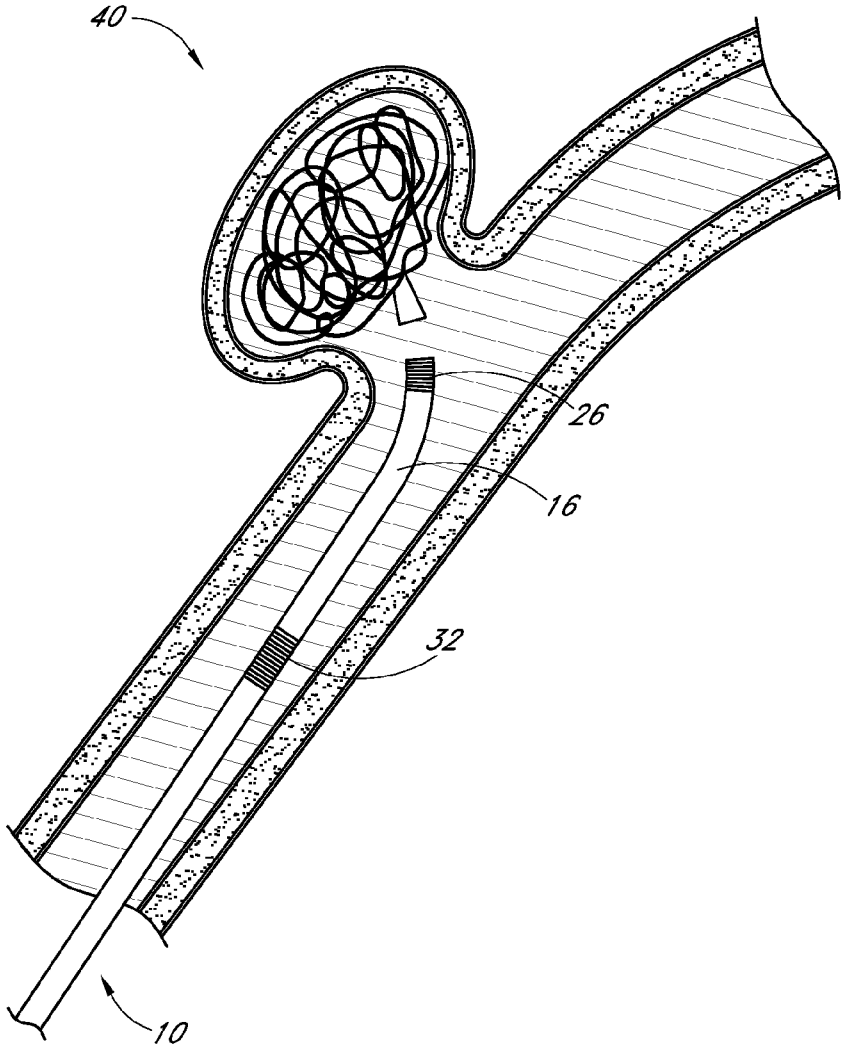

FIG. 2C

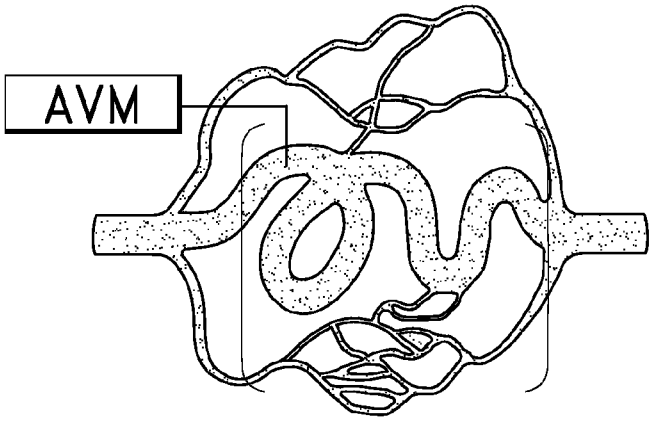

FIG.2D

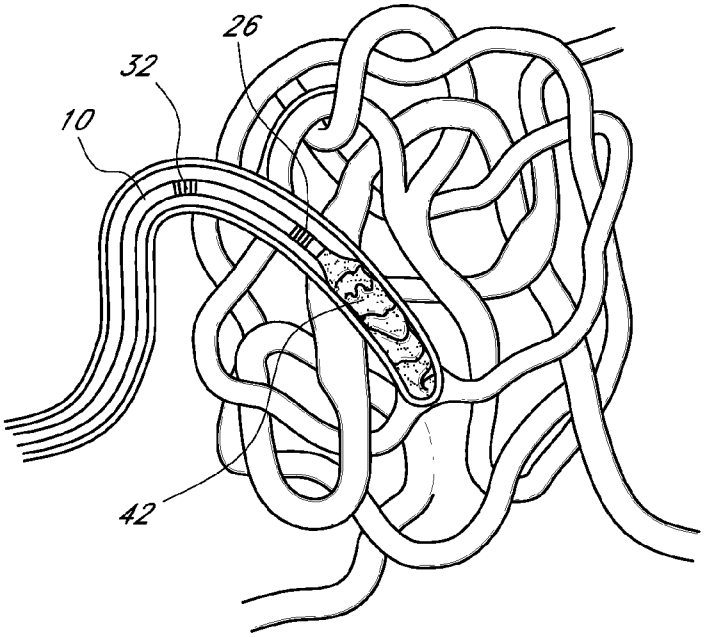

FIG.2E

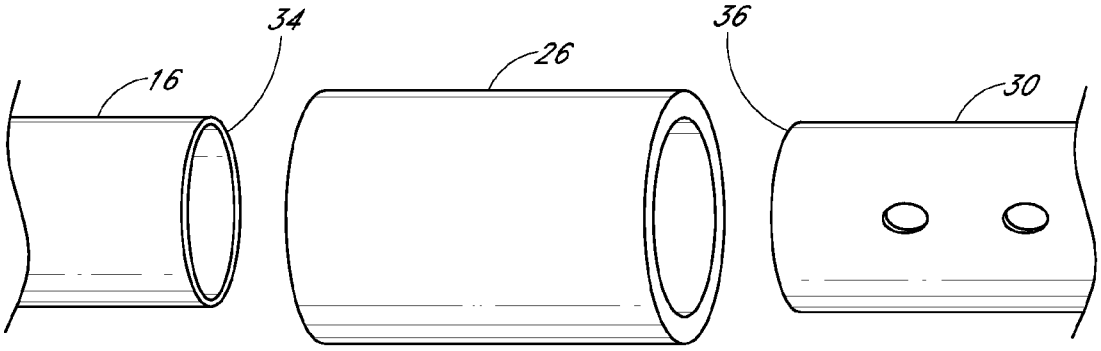

FIG. 3

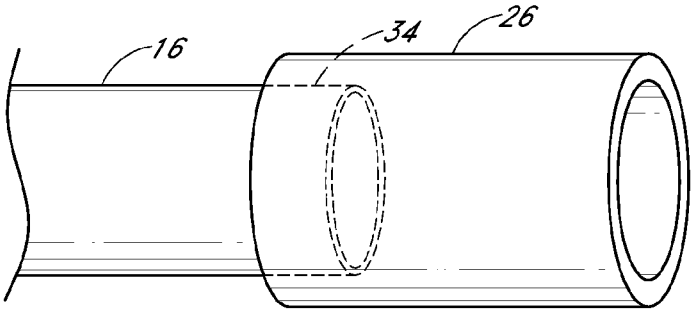

FIG. 4

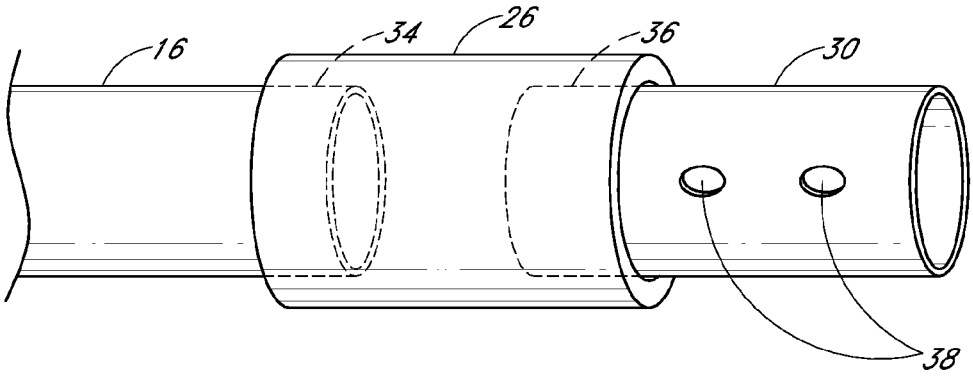

FIG. 5

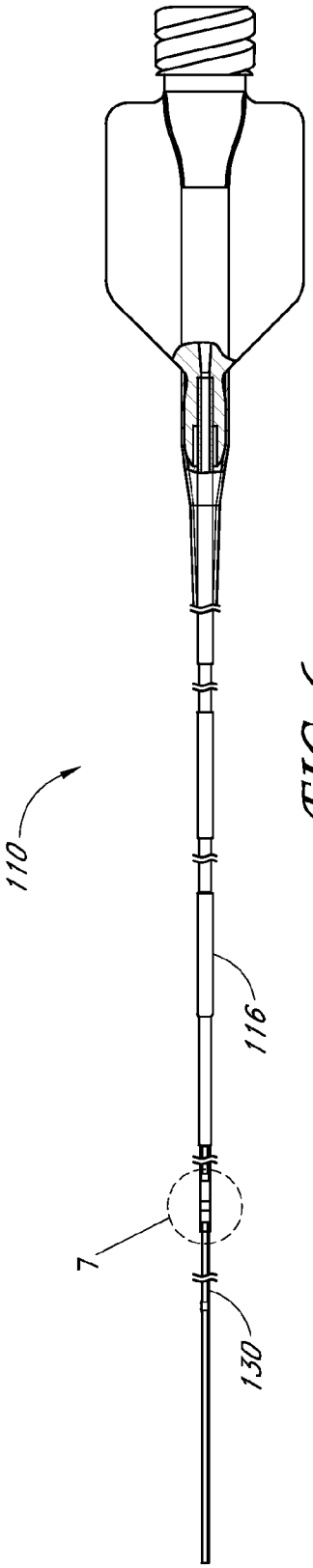

FIG. 6

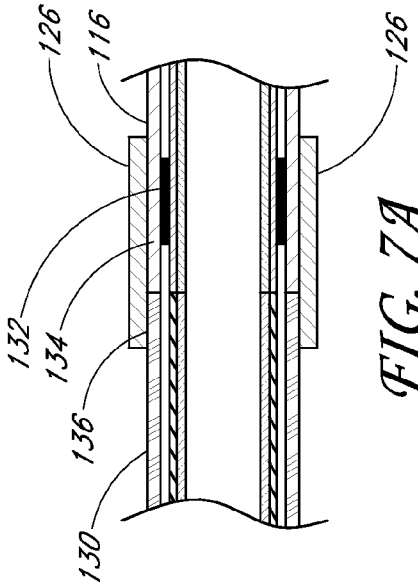

FIG. 7A

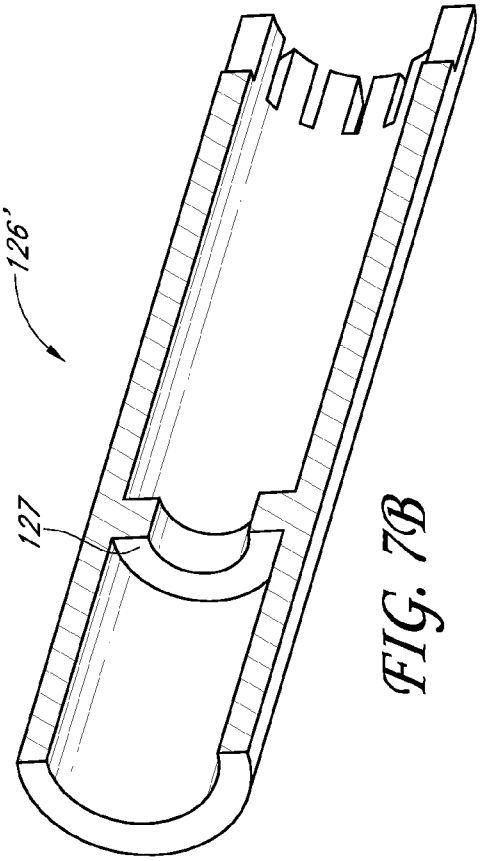

FIG. 7B

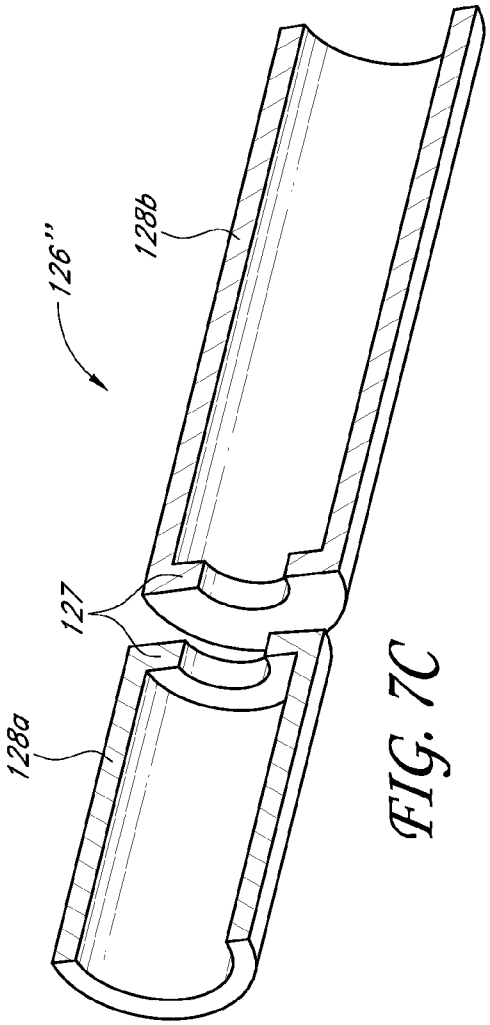

FIG. 7C

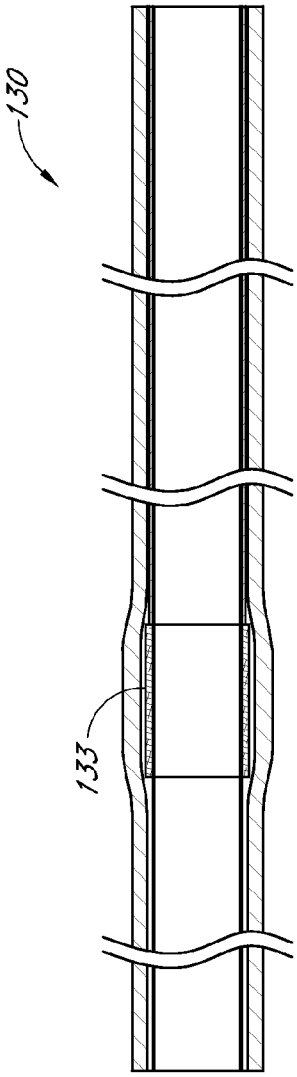

FIG. 8

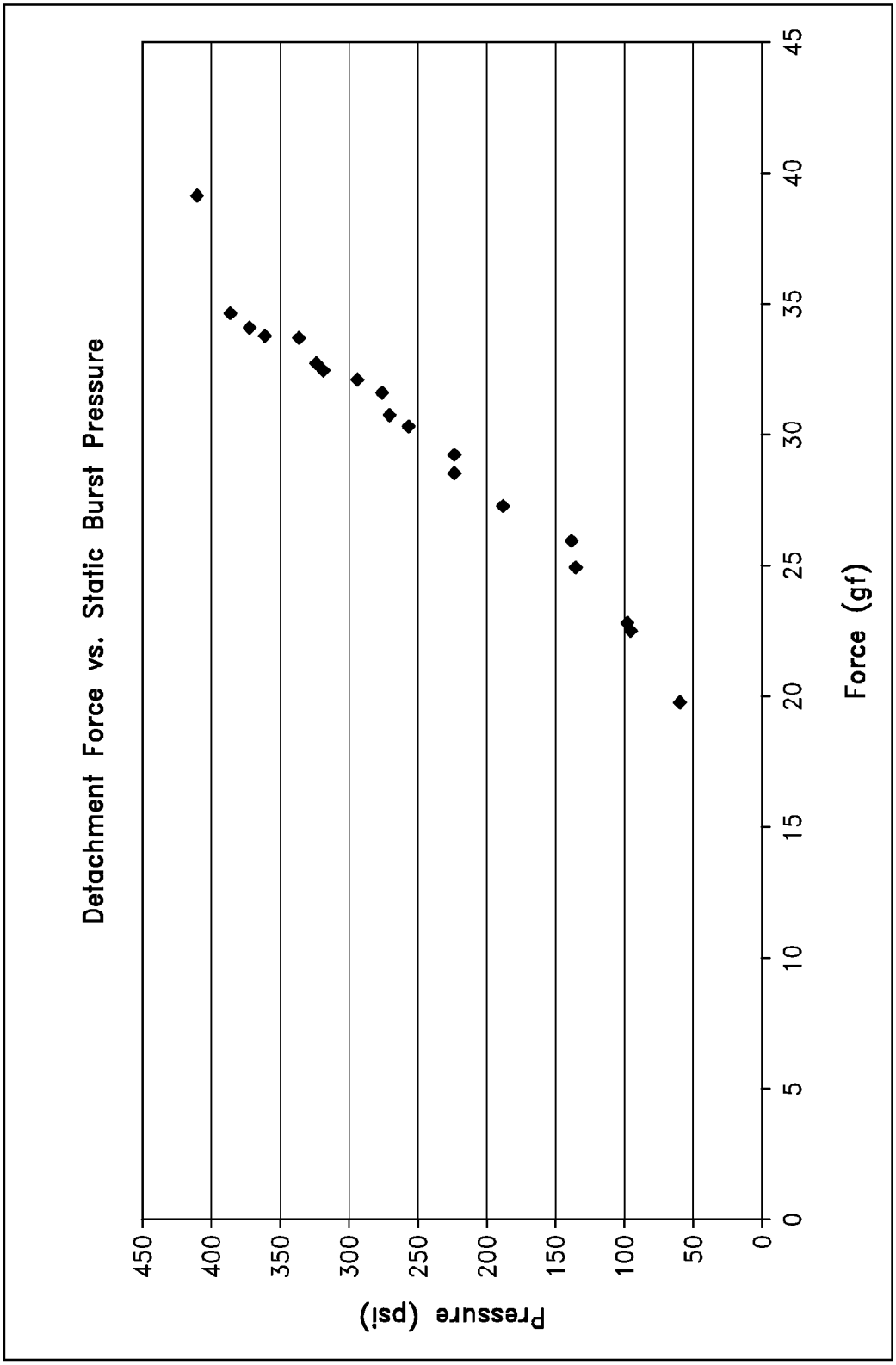
Detachment Force vs. Static Burst Pressure
Pressure (psi)
450
400
350
300
250
200
150
100
50
0
0
5
10
15
20
25
30
35
40
45
Force (gf)

FIG. 9

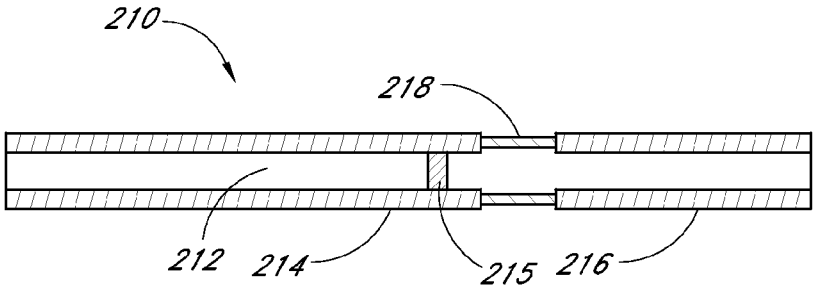

FIG. 10

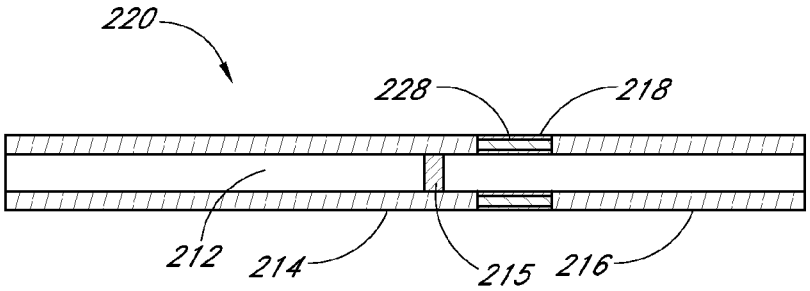

FIG. 11

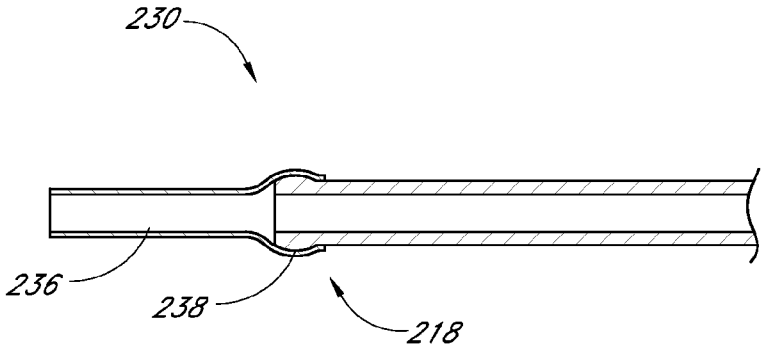

FIG. 12

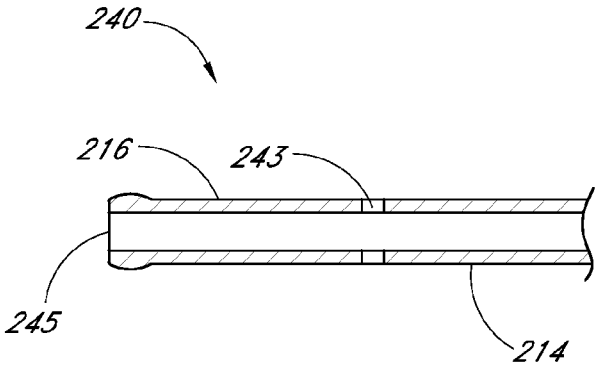

FIG. 13

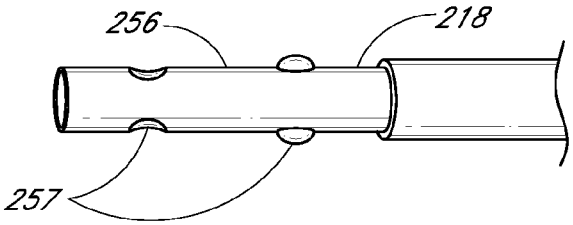

FIG. 14

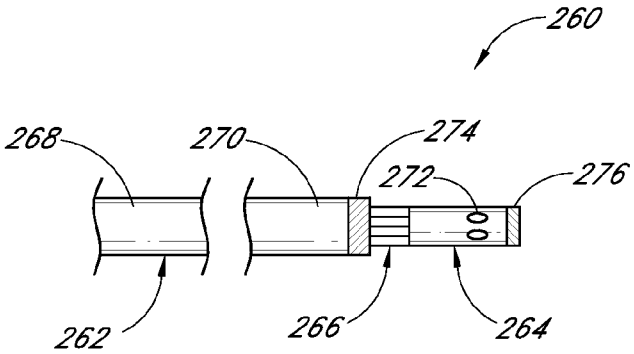

FIG. 15

INTERNATIONAL SEARCH REPORT

International application No
PCT/US2009/054353

A. CLASSIFICATION OF SUBJECT MATTER
INV. A61M25/00

According to International Patent Classification (IPC) or to both national classification and IPC

B. FIELDS SEARCHED

Minimum documentation searched (classification system followed by classification symbols)
A61M

Documentation searched other than minimum documentation to the extent that such documents are included in the fields searched

Electronic data base consulted during the international search (name of data base and, where practical, search terms used)

EPO-Internal, WPI Data

C. DOCUMENTS CONSIDERED TO BE RELEVANT

Category*	Citation of document, with indication, where appropriate, of the relevant passages	Relevant to claim No.
A	US 2002/198440 A1 (SNOW TODD [US]) 26 December 2002 (2002-12-26) abstract; figures 1A,1B -----	1-12, 25-45
A	US 4 698 056 A (CIANNELLA MICHAEL A [US]) 6 October 1987 (1987-10-06) abstract; figures 2-5 -----	1-12, 25-45

[ ] Further documents are listed in the continuation of Box C.

[X] See patent family annex.

* Special categories of cited documents :

"A" document defining the general state of the art which is not considered to be of particular relevance

"E" earlier document but published on or after the international filing date

"L" document which may throw doubts on priority claim(s) or which is cited to establish the publication date of another citation or other special reason (as specified)

"O" document referring to an oral disclosure, use, exhibition or other means

"P" document published prior to the international filing date but later than the priority date claimed

"T" later document published after the international filing date or priority date and not in conflict with the application but cited to understand the principle or theory underlying the invention

"X" document of particular relevance; the claimed invention cannot be considered novel or cannot be considered to involve an inventive step when the document is taken alone

"Y" document of particular relevance; the claimed invention cannot be considered to involve an inventive step when the document is combined with one or more other such documents, such combination being obvious to a person skilled in the art.

"&" document member of the same patent family

Date of the actual completion of the international search	Date of mailing of the international search report
21 December 2009	30/12/2009

Name and mailing address of the ISA/	Authorized officer
European Patent Office, P.B. 5818 Patentlaan 2 NL - 2280 HV Rijswijk Tel. (+31-70) 340-2040, Fax: (+31-70) 340-3016	Mausser, Thomas

International application No.
PCT/US2009/054353

INTERNATIONAL SEARCH REPORT

Box No. II Observations where certain claims were found unsearchable (Continuation of item 2 of first sheet)

This international search report has not been established in respect of certain claims under Article 17(2)(a) for the following reasons:

1. [X] Claims Nos.: 13-24, 46
because they relate to subject matter not required to be searched by this Authority, namely:

Rule 39.1(iv) PCT - Method for treatment of the human or animal body by surgery

2. [ ] Claims Nos.:
because they relate to parts of the international application that do not comply with the prescribed requirements to such an extent that no meaningful international search can be carried out, specifically:

3. [ ] Claims Nos.:
because they are dependent claims and are not drafted in accordance with the second and third sentences of Rule 6.4(a).

Box No. III Observations where unity of invention is lacking (Continuation of item 3 of first sheet)

This International Searching Authority found multiple inventions in this international application, as follows:

1. [ ] As all required additional search fees were timely paid by the applicant, this international search report covers all searchable claims.

2. [ ] As all searchable claims could be searched without effort justifying an additional fees, this Authority did not invite payment of additional fees.

3. [ ] As only some of the required additional search fees were timely paid by the applicant, this international search report covers only those claims for which fees were paid, specifically claims Nos.:

4. [ ] No required additional search fees were timely paid by the applicant. Consequently, this international search report is restricted to the invention first mentioned in the claims; it is covered by claims Nos.:

Remark on Protest

[ ] The additional search fees were accompanied by the applicant's protest and, where applicable, the payment of a protest fee.

[ ] The additional search fees were accompanied by the applicant's protest but the applicable protest fee was not paid within the time limit specified in the invitation.

[ ] No protest accompanied the payment of additional search fees.

INTERNATIONAL SEARCH REPORT

Information on patent family members

International application No
PCT/US2009/054353

Patent document cited in search report	Publication date	Patent family member(s)	Publication date
US 2002198440 A1	26-12-2002	WO 03000171 A1	03-01-2003
US 4698056 A	06-10-1987	NONE	

PATENT COOPERATION TREATY

From the INTERNATIONAL SEARCHING AUTHORITY

To:
KNOBBE, MARTENS, OLSON
Attn. Altman, Daniel E.
AND BEAR, LLP
2040 Main Street, Fourteenth Floor
Irvine, CA 92614
ETATS-UNIS D'AMERIQUE

PCT

NOTIFICATION OF TRANSMITTAL OF THE INTERNATIONAL SEARCH REPORT AND THE WRITTEN OPINION OF THE INTERNATIONAL SEARCHING AUTHORITY, OR THE DECLARATION

(PCT Rule 44.1)

	Date of mailing *(day/month/year)* 30/12/2009
Applicant's or agent's file reference EV3N.017VPC	**FOR FURTHER ACTION** See paragraphs 1 and 4 below
International application No. PCT/US2009/054353	International filing date *(day/month/year)* 19/08/2009
Applicant MICRO THERAPEUTICS, INC.	

1. [x] The applicant is hereby notified that the international search report and the written opinion of the International Searching Authority have been established and are transmitted herewith.

   Filing of amendments and statement under Article 19:
   The applicant is entitled, if he so wishes, to amend the claims of the International Application (see Rule 46):

   When? The time limit for filing such amendments is normally two months from the date of transmittal of the International Search Report.

   Where? Directly to the International Bureau of WIPO, 34 chemin des Colombettes 1211 Geneva 20, Switzerland, Fascimile No.: (41-22) 338.82.70

   For more detailed instructions, see the notes on the accompanying sheet.

2. [ ] The applicant is hereby notified that no international search report will be established and that the declaration under Article 17(2)(a) to that effect and the written opinion of the International Searching Authority are transmitted herewith.

3. [ ] **With regard to any protest** against payment of (an) additional fee(s) under Rule 40.2, the applicant is notified that:

   [ ] the protest together with the decision thereon has been transmitted to the International Bureau together with the applicant's request to forward the texts of both the protest and the decision thereon to the designated Offices.

   [ ] no decision has been made yet on the protest; the applicant will be notified as soon as a decision is made.

4. **Reminders**

   Shortly after the expiration of **18 months** from the priority date, the international application will be published by the International Bureau. If the applicant wishes to avoid or postpone publication, a notice of withdrawal of the international application, or of the priority claim, must reach the International Bureau as provided in Rules 90*bis*.1 and 90*bis*.3, respectively, before the completion of the technical preparations for international publication.

   The applicant may submit comments on an informal basis on the written opinion of the International Searching Authority to the International Bureau. The International Bureau will send a copy of such comments to all designated Offices unless an international preliminary examination report has been or is to be established. These comments would also be made available to the public but not before the expiration of 30 months from the priority date.

   Within **19 months** from the priority date, but only in respect of some designated Offices, a demand for international preliminary examination must be filed if the applicant wishes to postpone the entry into the national phase **until 30 months** from the priority date (in some Offices even later); otherwise, the applicant must, **within 20 months** from the priority date, perform the prescribed acts for entry into the national phase before those designated Offices.

   In respect of other designated Offices, the time limit of **30 months** (or later) will apply even if no demand is filed within 19 months.

   See the Annex to Form PCT/IB/301 and, for details about the applicable time limits, Office by Office, see the *PCT Applicant's Guide*, National Chapters.

Name and mailing address of the International Searching Authority	Authorized officer
European Patent Office, P.B. 5818 Patentlaan 2 NL-2280 HV Rijswijk Tel. (+31-70) 340-2040, Tx. 31 651 epo nl, Fax: (+31-70) 340-3016	Aline Oxfort-Thumser

NOTES TO FORM PCT/ISA/220

These Notes are intended to give the basic instructions concerning the filing of amendments under article 19. The Notes are based on the requirements of the Patent Cooperation Treaty, the Regulations and the Administrative Instructions under that Treaty. In case of discrepancy between these Notes and those requirements, the latter are applicable. For more detailed information, see also the *PCT Applicant's Guide*.

In these Notes, "Article", "Rule", and "Section" refer to the provisions of the PCT, the PCT Regulations and the PCT Administrative Instructions, respectively.

INSTRUCTIONS CONCERNING AMENDMENTS UNDER ARTICLE 19

The applicant has, after having received the international search report and the written opinion of the International Searching Authority, one opportunity to amend the claims of the international application. It should however be emphasized that, since all parts of the international application (claims,description and drawings) may be amended during the international preliminary examination procedure, there is usually no need to file amendments of the claims under Article 19 except where, e.g. the applicant wants the latter to be published for the purposes of provisional protection or has another reason for amending the claims before international publication. Furthermore, it should be emphasized that provisional protection is available in some States only (see *PCT Applicant's Guide*, Annex B).

The attention of the applicant is drawn to the fact that amendments to the claims under Article 19 are not allowed where the International Searching Authority has declared, under Article 17(2), that no international search report would be established (see *PCT Applicant's Guide*, International Phase, paragraph 296).

What parts of the international application may be amended?

Under Article 19, only the claims may be amended.

During the International phase, the claims may also be amended (or further amended) under Article 34 before the International Preliminary Examining Authority. The description and drawings may only be amended under Article 34 before the International Examining Authority.

Upon entry into the national phase, all parts of the international application may be amended under Article 28 or, where applicable, Article 41.

When? Within 2 months from the date of transmittal of the international search report or 16 months from the priority date, whichever time limit expires later. It should be noted, however, that the amendments will be considered as having been received on time if they are received by the International Bureau after the expiration of the applicable time limit but before the completion of the technical preparations for international publication (Rule 46.1).

Where not to file the amendments?

The amendments may only be filed with the International Bureau and not with the receiving Office or the International Searching Authority (Rule 46.2).

Where a demand for international preliminary examination has been/is filed, see below.

How? Either by cancelling one or more entire claims, by adding one or more new claims or by amending the text of one or more of the claims as filed.

A replacement sheet or sheets containing a complete set of claims in replacement of all the claims previously filed must be submitted.

Where a claim is cancelled, no renumbering of the other claims is required. In all cases where claims are renumbered, they must be renumbered consecutively in Arabic numerals (Section 205(a)).

The amendments must be made in the language in which the international application is to be published.

What documents must/may accompany the amendments?

Letter (Section 205(b)):

The amendments must be submitted with a letter.

The letter will not be published with the international application and the amended claims. It should not be confused with the "Statement under Article 19(1)" (see below, under "Statement under Article 19(1)").

The letter must be in English or French, at the choice of the applicant. However, if the language of the international application is English, the letter must be in English; if the language of the international application is French, the letter must be in French.

NOTES TO FORM PCT/ISA/220

These Notes are intended to give the basic instructions concerning the filing of amendments under article 19. The Notes are based on the requirements of the Patent Cooperation Treaty, the Regulations and the Administrative Instructions under that Treaty. In case of discrepancy between these Notes and those requirements, the latter are applicable. For more detailed information, see also the *PCT Applicant's Guide*.

In these Notes, "Article", "Rule", and "Section" refer to the provisions of the PCT, the PCT Regulations and the PCT Administrative Instructions, respectively.

INSTRUCTIONS CONCERNING AMENDMENTS UNDER ARTICLE 19

The applicant has, after having received the international search report and the written opinion of the International Searching Authority, one opportunity to amend the claims of the international application. It should however be emphasized that, since all parts of the international application (claims,description and drawings) may be amended during the international preliminary examination procedure, there is usually no need to file amendments of the claims under Article 19 except where, e.g. the applicant wants the latter to be published for the purposes of provisional protection or has another reason for amending the claims before international publication. Furthermore, it should be emphasized that provisional protection is available in some States only (see *PCT Applicant's Guide*, Annex B).

The attention of the applicant is drawn to the fact that amendments to the claims under Article 19 are not allowed where the International Searching Authority has declared, under Article 17(2), that no international search report would be established (see *PCT Applicant's Guide*, International Phase, paragraph 296).

What parts of the international application may be amended?

Under Article 19, only the claims may be amended.

During the international phase, the claims may also be amended (or further amended) under Article 34 before the International Preliminary Examining Authority. The description and drawings may only be amended under Article 34 before the International Examining Authority.

Upon entry into the national phase, all parts of the international application may be amended under Article 28 or, where applicable, Article 41.

When? Within 2 months from the date of transmittal of the international search report or 16 months from the priority date, whichever time limit expires later. It should be noted, however, that the amendments will be considered as having been received on time if they are received by the International Bureau after the expiration of the applicable time limit but before the completion of the technical preparations for international publication (Rule 46.1).

Where not to file the amendments?

The amendments may only be filed with the International Bureau and not with the receiving Office or the International Searching Authority (Rule 46.2).

Where a demand for international preliminary examination has been/is filed, see below.

How? Either by cancelling one or more entire claims, by adding one or more new claims or by amending the text of one or more of the claims as filed.

A replacement sheet or sheets containing a complete set of claims in replacement of all the claims previously filed must be submitted.

Where a claim is cancelled, no renumbering of the other claims is required. In all cases where claims are renumbered, they must be renumbered consecutively in Arabic numerals (Section 205(a)).

The amendments must be made in the language in which the international application is to be published.

What documents must/may accompany the amendments?

Letter (Section 205(b)):

The amendments must be submitted with a letter.

The letter will not be published with the international application and the amended claims. It should not be confused with the "Statement under Article 19(1)" (see below, under "Statement under Article 19(1)").

The letter must be in English or French, at the choice of the applicant. However, if the language of the international application is English, the letter must be in English; if the language of the international application is French, the letter must be in French.

PATENT COOPERATION TREATY

PCT

INTERNATIONAL SEARCH REPORT

(PCT Article 18 and Rules 43 and 44)

Applicant's or agent's file reference EV3N.017VPC	**FOR FURTHER ACTION**	see Form PCT/ISA/220 as well as, where applicable, item 5 below.
International application No. PCT/US2009/054353	International filing date *(day/month/year)* 19/08/2009	(Earliest) Priority Date *(day/month/year)* 19/08/2008
Applicant MICRO THERAPEUTICS, INC.		

This international search report has been prepared by this International Searching Authority and is transmitted to the applicant according to Article 18. A copy is being transmitted to the International Bureau.

This international search report consists of a total of 4 sheets.

[X] It is also accompanied by a copy of each prior art document cited in this report.

1. **Basis of the report**
   a. With regard to the **language**, the international search was carried out on the basis of:
      [X] the international application in the language in which it was filed
      [ ] a translation of the international application into _____, which is the language of a translation furnished for the purposes of international search (Rules 12.3(a) and 23.1(b))
   b. [ ] This international search report has been established taking into account the **rectification of an obvious mistake** authorized by or notified to this Authority under Rule 91 (Rule 43.6*bis*(a)).
   c. [ ] With regard to any **nucleotide and/or amino acid sequence** disclosed in the international application, see Box No. I.
2. [ ] **Certain claims were found unsearchable** (See Box No. II)
3. [ ] **Unity of invention is lacking** (see Box No III)
4. With regard to the **title**,
   [X] the text is approved as submitted by the applicant
   [ ] the text has been established by this Authority to read as follows:
5. With regard to the **abstract**,
   [X] the text is approved as submitted by the applicant
   [ ] the text has been established, according to Rule 38.2(b), by this Authority as it appears in Box No. IV. The applicant may, within one month from the date of mailing of this international search report, submit comments to this Authority
6. With regard to the **drawings**,
   a. the figure of the **drawings** to be published with the abstract is Figure No. 1
      [X] as suggested by the applicant
      [ ] as selected by this Authority, because the applicant failed to suggest a figure
      [ ] as selected by this Authority, because this figure better characterizes the invention
   b. [ ] none of the figures is to be published with the abstract

INTERNATIONAL SEARCH REPORT

International application No
PCT/US2009/054353

A. CLASSIFICATION OF SUBJECT MATTER
INV. A61M25/00

According to International Patent Classification (IPC) or to both national classification and IPC

B. FIELDS SEARCHED

Minimum documentation searched (classification system followed by classification symbols)
A61M

Documentation searched other than minimum documentation to the extent that such documents are included in the fields searched

Electronic data base consulted during the international search (name of data base and, where practical, search terms used)

EPO-Internal, WPI Data

C. DOCUMENTS CONSIDERED TO BE RELEVANT

Category*	Citation of document, with indication, where appropriate, of the relevant passages	Relevant to claim No.
A	US 2002/198440 A1 (SNOW TODD [US]) 26 December 2002 (2002-12-26) abstract; figures 1A,1B	1-12, 25-45
A	US 4 698 056 A (CIANNELLA MICHAEL A [US]) 6 October 1987 (1987-10-06) abstract; figures 2-5	1-12, 25-45

[ ] Further documents are listed in the continuation of Box C.

[X] See patent family annex.

* Special categories of cited documents :

"A" document defining the general state of the art which is not considered to be of particular relevance

"E" earlier document but published on or after the international filing date

"L" document which may throw doubts on priority claim(s) or which is cited to establish the publication date of another citation or other special reason (as specified)

"O" document referring to an oral disclosure, use, exhibition or other means

"P" document published prior to the international filing date but later than the priority date claimed

"T" later document published after the international filing date or priority date and not in conflict with the application but cited to understand the principle or theory underlying the invention

"X" document of particular relevance; the claimed invention cannot be considered novel or cannot be considered to involve an inventive step when the document is taken alone

"Y" document of particular relevance; the claimed invention cannot be considered to involve an inventive step when the document is combined with one or more other such documents, such combination being obvious to a person skilled in the art.

"&" document member of the same patent family

Date of the actual completion of the international search	Date of mailing of the international search report
21 December 2009	30/12/2009

Name and mailing address of the ISA/	Authorized officer
European Patent Office, P.B. 5818 Patentlaan 2 NL – 2280 HV Rijswijk Tel. (+31-70) 340-2040, Fax: (+31-70) 340-3016	Mausser, Thomas

INTERNATIONAL SEARCH REPORT

International application No.
PCT/US2009/054353

Box No. II Observations where certain claims were found unsearchable (Continuation of item 2 of first sheet)

This International search report has not been established in respect of certain claims under Article 17(2)(a) for the following reasons:

1. [X] Claims Nos.: 13-24, 46
because they relate to subject matter not required to be searched by this Authority, namely:

Rule 39.1(iv) PCT - Method for treatment of the human or animal body by surgery

2. [ ] Claims Nos.:
because they relate to parts of the International application that do not comply with the prescribed requirements to such an extent that no meaningful international search can be carried out, specifically:

3. [ ] Claims Nos.:
because they are dependent claims and are not drafted in accordance with the second and third sentences of Rule 6.4(a).

Box No. III Observations where unity of invention is lacking (Continuation of item 3 of first sheet)

This International Searching Authority found multiple inventions in this international application, as follows:

1. [ ] As all required additional search fees were timely paid by the applicant, this international search report covers all searchable claims.

2. [ ] As all searchable claims could be searched without effort justifying an additional fees, this Authority did not invite payment of additional fees.

3. [ ] As only some of the required additional search fees were timely paid by the applicant, this international search report covers only those claims for which fees were paid, specifically claims Nos.:

4. [ ] No required additional search fees were timely paid by the applicant. Consequently, this international search report is restricted to the invention first mentioned in the claims; it is covered by claims Nos.:

Remark on Protest

[ ] The additional search fees were accompanied by the applicant's protest and, where applicable, the payment of a protest fee.

[ ] The additional search fees were accompanied by the applicant's protest but the applicable protest fee was not paid within the time limit specified in the invitation.

[ ] No protest accompanied the payment of additional search fees.

INTERNATIONAL SEARCH REPORT

Information on patent family members

International application No
PCT/US2009/054353

Patent document cited in search report	Publication date	Patent family member(s)	Publication date
US 2002198440 A1	26-12-2002	WO 03000171 A1	03-01-2003
US 4698056 A	06-10-1987	NONE	

PATENT COOPERATION TREATY

From the
INTERNATIONAL SEARCHING AUTHORITY

To:

see form PCT/ISA/220

PCT

WRITTEN OPINION OF THE INTERNATIONAL SEARCHING AUTHORITY

(PCT Rule 43*bis*.1)

Date of mailing
(day/month/year) see form PCT/ISA/210 (second sheet)

Applicant's or agent's file reference
see form PCT/ISA/220

FOR FURTHER ACTION
See paragraph 2 below

International application No.	International filing date *(day/month/year)*	Priority date *(day/month/year)*
PCT/US2009/054353	19.08.2009	19.08.2008

International Patent Classification (IPC) or both national classification and IPC
INV. A61M25/00

Applicant
MICRO THERAPEUTICS, INC.

1. This opinion contains indications relating to the following items:

- ☒ Box No. I Basis of the opinion
- ☐ Box No. II Priority
- ☒ Box No. III Non-establishment of opinion with regard to novelty, inventive step and industrial applicability
- ☐ Box No. IV Lack of unity of invention
- ☒ Box No. V Reasoned statement under Rule 43*bis*.1(a)(i) with regard to novelty, inventive step or industrial applicability; citations and explanations supporting such statement
- ☐ Box No. VI Certain documents cited
- ☒ Box No. VII Certain defects in the international application
- ☒ Box No. VIII Certain observations on the international application

2. **FURTHER ACTION**

If a demand for international preliminary examination is made, this opinion will usually be considered to be a written opinion of the International Preliminary Examining Authority ("IPEA") except that this does not apply where the applicant chooses an Authority other than this one to be the IPEA and the chosen IPEA has notifed the International Bureau under Rule 66.1*bis*(b) that written opinions of this International Searching Authority will not be so considered.

If this opinion is, as provided above, considered to be a written opinion of the IPEA, the applicant is invited to submit to the IPEA a written reply together, where appropriate, with amendments, before the expiration of 3 months from the date of mailing of Form PCT/ISA/220 or before the expiration of 22 months from the priority date, whichever expires later.

For further options, see Form PCT/ISA/220.

3. For further details, see notes to Form PCT/ISA/220.

Name and mailing address of the ISA:

European Patent Office

D-80298 Munich
Tel. +49 89 2399 - 0
Fax: +49 89 2399 - 4465

Date of completion of this opinion

see form PCT/ISA/210

Authorized Officer

Mausser, Thomas

Telephone No. +49 89 2399-2355

Box No. I Basis of the opinion

1. With regard to the **language**, this opinion has been established on the basis of:

   ☒ the international application in the language in which it was filed

   ☐ a translation of the international application into , which is the language of a translation furnished for the purposes of international search (Rules 12.3(a) and 23.1 (b)).

2. ☐ This opinion has been established taking into account the **rectification of an obvious mistake** authorized by or notified to this Authority under Rule 91 (Rule 43bis.1(a))

3. With regard to any **nucleotide and/or amino acid sequence** disclosed in the international application and necessary to the claimed invention, this opinion has been established on the basis of:

   a. type of material:

   ☐ a sequence listing

   ☐ table(s) related to the sequence listing

   b. format of material:

   ☐ on paper

   ☐ in electronic form

   c. time of filing/furnishing:

   ☐ contained in the international application as filed.

   ☐ filed together with the international application in electronic form.

   ☐ furnished subsequently to this Authority for the purposes of search.

4. ☐ In addition, in the case that more than one version or copy of a sequence listing and/or table relating thereto has been filed or furnished, the required statements that the information in the subsequent or additional copies is identical to that in the application as filed or does not go beyond the application as filed, as appropriate, were furnished.

5. Additional comments:

Box No. III Non-establishment of opinion with regard to novelty, inventive step and industrial applicability

The questions whether the claimed invention appears to be novel, to involve an inventive step (to be non obvious), or to be industrially applicable have not been examined in respect of

☐ the entire international application

☒ claims Nos. 13-24, 46

because:

☐ the said international application, or the said claims Nos. relate to the following subject matter which does not require an international search *(specify)*:

☐ the description, claims or drawings *(indicate particular elements below)* or said claims Nos. are so unclear that no meaningful opinion could be formed *(specify)*:

☐ the claims, or said claims Nos. are so inadequately supported by the description that no meaningful opinion could be formed *(specify)*:

☒ no international search report has been established for the whole application or for said claims Nos. 13-24, 46

☐ a meaningful opinion could not be formed without the sequence listing; the applicant did not, within the prescribed time limit:

- ☐ furnish a sequence listing on paper complying with the standard provided for in Annex C of the Administrative Instructions, and such listing was not available to the International Searching Authority in a form and manner acceptable to it.
- ☐ furnish a sequence listing in electronic form complying with the standard provided for in Annex C of the Administrative Instructions, and such listing was not available to the International Searching Authority in a form and manner acceptable to it.
- ☐ pay the required late furnishing fee for the furnishing of a sequence listing in response to an invitation under Rules 13*ter*.1(a) or (b).

☐ a meaningful opinion could not be formed without the tables related to the sequence listings; the applicant did not, within the prescribed time limit, furnish such tables in electronic form complying with the technical requirements provided for in Annex C-*bis* of the Administrative Instructions, and such tables were not available to the International Searching Authority in a form and manner acceptable to it.

☐ the tables related to the nucleotide and/or amino acid sequence listing, if in electronic form only, do not comply with the technical requirements provided for in Annex C-*bis* of the Administrative Instructions.

☐ See Supplemental Box for further details

Box No. V Reasoned statement under Rule 43*bis*.1(a)(i) with regard to novelty, inventive step or industrial applicability; citations and explanations supporting such statement

1. Statement

Novelty (N)	Yes:	Claims	1-12, 25-45
	No:	Claims	
Inventive step (IS)	Yes:	Claims	1-12, 25-45
	No:	Claims	
Industrial applicability (IA)	Yes:	Claims	1-12, 25-45
	No:	Claims	

2. Citations and explanations

see separate sheet

Box No. VII Certain defects in the international application

The following defects in the form or contents of the international application have been noted:

see separate sheet

Box No. VIII Certain observations on the international application

The following observations on the clarity of the claims, description, and drawings or on the question whether the claims are fully supported by the description, are made:

see separate sheet

RE ITEM III

Claims 13 to 24 and 46 concern a method for treatment of the human or animal body by surgery (Rule 39.1(iv) PCT).

RE ITEM V

Reference is made to the following documents:
D1 : US 2002/198440 A1 (SNOW TODD [US]) 26 December 2002 (2002-12-26)
D2 : US 4 698 056 A (CIANNELLA MICHAEL A [US]) 6 October 1987 (1987-10-06)

The subject-matter of claims 1, 25, 37 and 41 seems to involve an inventive step (Article 33(3) PCT) because it allows easier removal of the microcatheter after delivery of embolic agent to a vascular site.

Claims 2-12, 26-36, 38-40, 42-45 are dependent on the above claims and as such also seem to meet the requirements of the PCT with respect to novelty and inventive step.

RE ITEM VII

The features of the claims are not provided with reference signs placed in parentheses (Rule 6.2(b) PCT).

It is appropriate to draft the independent claim in the two-part form, whereby the features known from D1 should be placed in the preamble.

If the applicant is of the opinion that a two-part form of the claim would be inappropriate he is invited to provide reasons in his reply. In addition, the applicant should ensure that it is clear from the description which features of the subject-matter of the independent

RE ITEM VIII

Although claims 1, 25, 37 and 41 have been drafted as separate independent claims, they appear to relate effectively to the same subject-matter and to differ from each other only with regard to the definition of the subject-matter for which protection is sought and in respect of the terminology used for the features of that subject-matter. The aforementioned claims therefore lack conciseness. Moreover, lack of clarity of the claims as a whole arises, since the plurality of independent claims makes it difficult, if not impossible, to determine the matter for which protection is sought, and places an undue burden on others seeking to establish the extent of the protection.

Hence, claims 1, 25, 37 and 41 do not meet the requirements of Article 6 PCT.

In order to overcome this objection, it would appear appropriate to file an amended set of claims defining the relevant subject-matter in terms of a single independent claim in each category followed by dependent claims covering features which are merely optional.

Possible steps after receipt of the international search report (ISR) and written opinion of the International Searching Authority (WO-ISA)

General information	For all international applications filed on or after 01/01/2004 the competent ISA will establish an ISR. It is accompanied by the WO-ISA. Unlike the former written opinion of the IPEA (Rule 66.2 PCT), the WO-ISA is not meant to be responded to, but to be taken into consideration for further procedural steps. This document explains about the possibilities.
Amending claims under Art. 19 PCT	Within 2 months after the date of mailing of the ISR and the WO-ISA the applicant may file amended claims under Art. 19 PCT directly with the International Bureau of WIPO. The PCT reform of 2004 did not change this procedure. For further information please see Rule 46 PCT as well as form PCT/ISA/220 and the corresponding Notes to form PCT/ISA/220.
Filing a demand for international preliminary examination	In principle, the WO-ISA will be considered as the written opinion of the IPEA. This should, in many cases, make it unnecessary to file a demand for international preliminary examination. If the applicant nevertheless wishes to file a demand this must be done before expiry of 3 months after the date of mailing of the ISR/WO-ISA or 22 months after priority date, whichever expires later (Rule 54bis PCT). Amendments under Art. 34 PCT can be filed with the IPEA as before, normally at the same time as filing the demand (Rule 66.1 (b) PCT). If a demand for international preliminary examination is filed and no comments/amendments have been received the WO-ISA will be transformed by the IPEA into an IPRP (International Preliminary Report on Patentability) which would merely reflect the content of the WO-ISA. The demand can still be withdrawn (Art. 37 PCT).
Filing informal comments	After receipt of the ISR/WO-ISA the applicant may file informal comments on the WO-ISA directly with the International Bureau of WIPO. These will be communicated to the designated Offices together with the IPRP (International Preliminary Report on Patentability) at 30 months from the priority date. Please also refer to the next box.
End of the international phase	At the end of the international phase the International Bureau of WIPO will transform the WO-ISA or, if a demand was filed, the written opinion of the IPEA into the IPRP, which will then be transmitted together with possible informal comments to the designated Offices. The IPRP replaces the former IPER (international preliminary examination report).
Relevant PCT Rules and more information	Rule 43 PCT, Rule 43bis PCT, Rule 44 PCT, Rule 44bis PCT, PCT Newsletter 12/2003, OJ 11/2003, OJ 12/2003

Please Direct All Correspondence to Customer Number 68716

TRANSMITTAL LETTER

REQUEST FOR PARTICIPATION IN THE PATENT PROSECUTION HIGHWAY (PPH) PROGRAM BETWEEN THE EPO AND THE USPTO

Applicant	:	Karl Sutherland, et al.
App. No	:	12/543,857
Filed	:	August 19, 2009
For	:	DETACHABLE TIP MICROCATHETER
Examiner	:	Jocelin C Tanner
Art Unit		3731
Conf. No.	:	8196

Commissioner for Patents
P.O. Box 1450
Alexandria, VA 22313-1450

Dear Sir:

(X) A Request for Participation in the Patent Prosecution Highway (PPH) Program between the EPO and the USPTO form PTO/SB/20PCT-EP in three (3) pages.

(X) A Copy of the Notification of Transmittal, International Search Report and the Written Opinion of the International Searching Authority for International Application No. PCT/US2009/054353, in 13 pages.

(X) A Copy of the International Preliminary Report on Patentability for International Application No. PCT/US2009/054353.

(X) A Copy of the Publication of Application No. PCT/US2009/054353, in 54 pages.

(X) A copy of the Allowable Claims for PCT/US2009/054353, in 5 pages.

(X) Preliminary Amendment in seven (7) pages.

(X) An Information Disclosure Statement and PTO/SB/08 equivalent listing references for consideration.

- (X) Listing four (4) references.
- (X) Enclosing two (2) references.

Please Direct All Correspondence to Customer Number **68716**

The Commissioner is hereby authorized to charge any additional fees which may be required, or credit any overpayment, to Account No. 11-1410.

Date __March 31, 2011___

__/Benjamin E. Evans/_____

Benjamin E. Evans
Registration No. 60,293
Attorney of Record
Customer No. 68716
(949) 760-0404

10983457:033111

UNITED STATES PATENT AND TRADEMARK OFFICE

UNITED STATES DEPARTMENT OF COMMERCE
United States Patent and Trademark Office
Address: COMMISSIONER FOR PATENTS
P.O. Box 1450
Alexandria, Virginia 22313-1450
www.uspto.gov

APPLICATION NO.	FILING DATE	FIRST NAMED INVENTOR	ATTORNEY DOCKET NO.	CONFIRMATION NO.
12/543,857	08/19/2009	Karl Sutherland	EV3N.017A	8196

68716 7590 04/04/2011
KNOBBE, MARTENS, OLSON & BEAR, LLP
2040 MAIN STREET
FOURTEENTH FLOOR
IRVINE, CA 92614

EXAMINER
TANNER, JOCELIN C

ART UNIT	PAPER NUMBER
3731	

NOTIFICATION DATE	DELIVERY MODE
04/04/2011	ELECTRONIC

Please find below and/or attached an Office communication concerning this application or proceeding.

The time period for reply, if any, is set in the attached communication.

Notice of the Office communication was sent electronically on above-indicated "Notification Date" to the following e-mail address(es):

JCARTEE@KMOB.COM
efiling@kmob.com

UNITED STATES PATENT AND TRADEMARK OFFICE

Commissioner for Patents
United States Patent and Trademark Office
P.O. Box 1450
Alexandria, VA 22313-1450
www.uspto.gov

KNOBBE, MARTENS, OLSON & BEAR, LLP
2040 MAIN STREET
FOURTEENTH FLOOR
IRVINE CA 92614

In re Application of	:
SUTHERLAND, KARL et al	: DECISION ON REQUEST TO
Application No. 12/543,857	: PARTICIPATE IN PATENT
Filed: 08/19/2009	: PROSECUTION HIGHWAY
Attorney Docket No EV3N.017A	: PILOT PROGRAM AND PETITION
For: DETACHABLE TIP MICROCATHETER	: TO MAKE SPECIAL UNDER
	: 37 CFR 1.102(a)

This is a decision on the request to participate in the Patent Prosecution Highway (PPH) program and the petition under 37 CFR 1.102(a), filed March 31, 2011 to make the above-identified application special.

The request and petition are Granted.

A grantable request to participate in the PPH program and petition to make special require:
(1) The U.S. application must disclose an eligible relationship to one or more PCT applications filed in the JPO, EPO, KIPO or USPTO;
(2) Applicant must submit a copy of the allowable/patentable claim(s) from the PCT application(s) latest international work product (the written opinion or the IPER) along with an English translation thereof and a statement that the English translation is accurate;
(3) All the claims in the U.S. application must sufficiently correspond or be amended to sufficiently correspond to the allowable/patentable claim(s) in the PCT application(s);
(4) Examination of the U.S. application has not begun;
(5) Applicant must submit a copy of the latest international work product from the PCT application containing the allowable/patentable claim(s) along with an English translation thereof and a statement that the English translation is accurate; and
(6) Applicant must submit an IDS listing the documents cited by the PCT examiner in the international work product along with copies of documents except U.S. patents or U.S. patent application publications.

In light of the petition being properly submitted, the request to participate in the PPH program and the petition comply with the above requirements. Accordingly, the above-identified application has been accorded "special" status.

The applicant is encouraged to cite and submit all relevant prior art references, if any, to facilitate examination in this application.

All other inquiries concerning the examination or status of the application should be directed to Anhtuan Nguyen, the SPE of Art Unit 3731 and (571)272-4963 for Class 623/1.110 and also accessible in the PAIR system at http://www.uspto.gov/ebc.index.html.

All other inquiries concerning the examination or status of the application should be directed to the Patent Application Information Retrieval (PAIR) system.

This application will be forwarded and docketed to an examiner for action on the merits commensurate with this decision.

Telephone inquiries concerning this decision should be directed to Henry C. Yuen, at 571-272-4856.

The petition is **granted.**

/Henry C. Yuen/

Henry C. Yuen, Special Programs Examiner
Technology Center 3700 – Mechanical Engineering,
Manufacturing and Products
571-272-4856

UNITED STATES PATENT AND TRADEMARK OFFICE

Commissioner for Patents
United States Patent and Trademark Office
P.O. Box 1450
Alexandria, VA 22313-1450
www.uspto.gov

MAILED
AUG 04 2010
OFFICE OF PETITIONS

WINSTEAD PC
P.O. BOX 50784
DALLAS TX 75201

In re Application of	:	
Tour et al.	:	
Application No. 12/544017	:	
Filing or 371(c) Date: 08/19/2009	:	ON PETITION
Attorney Docket Number:	:	
11321/P177US	:	

This decision is in response to the petition under 37 CFR 1.182 to change inventor's name in a patent application, filed March 29, 2010.

The MPEP 605.04(c), Inventor Changes Name, provides

> In cases where an inventor's name has been changed after the application has been filed and the inventor desires to change his or her name on the application, he or she must submit a petition under 37 CFR 1.182. Applicants are also strongly encouraged to submit an application data sheet (37 CFR 1.76) showing the new name. The petition should be directed to the attention of the Office of Petitions. The petition must include an appropriate petition fee and a statement signed by the inventor setting forth both names and the procedure whereby the change of name was effected, or a copy of the court order.

The petition is hereby granted.

The name of inventor Amanda Lynn Higginbothem has been changed to Amanda Lynn Duque and the name Amanda Lynn Duque has been entered and made of record in the above-identified application.

A Corrected Filing Receipt is enclosed with the inventor's name corrected to Amanda Lynn Duque.

The application is being referred to Technology Center Art Unit 1796 for examination in the normal course of business.

Telephone inquiries concerning this matter should be directed to the undersigned at (571) 272-3232.

/Derek L. Woods/

Derek L. Woods
Attorney
Office of Petitions

UNITED STATES PATENT AND TRADEMARK OFFICE

UNITED STATES DEPARTMENT OF COMMERCE
United States Patent and Trademark Office
Address: COMMISSIONER FOR PATENTS
P.O. Box 1450
Alexandria, Virginia 22313-1450
www.uspto.gov

APPLICATION NUMBER	FILING or 371(c) DATE	GRP ART UNIT	FIL FEE REC'D	ATTY.DOCKET.NO	TOT CLAIMS	IND CLAIMS
12/544,017	08/19/2009	1796	1715	11321/P177US	53	6

CONFIRMATION NO. 8511

CORRECTED FILING RECEIPT

61060
WINSTEAD PC
P.O. BOX 50784
DALLAS, TX 75201

OC000000042851877

Date Mailed: 08/02/2010

Receipt is acknowledged of this non-provisional patent application. The application will be taken up for examination in due course. Applicant will be notified as to the results of the examination. Any correspondence concerning the application must include the following identification information: the U.S. APPLICATION NUMBER, FILING DATE, NAME OF APPLICANT, and TITLE OF INVENTION. Fees transmitted by check or draft are subject to collection. Please verify the accuracy of the data presented on this receipt. **If an error is noted on this Filing Receipt, please submit a written request for a Filing Receipt Correction. Please provide a copy of this Filing Receipt with the changes noted thereon. If you received a "Notice to File Missing Parts" for this application, please submit any corrections to this Filing Receipt with your reply to the Notice. When the USPTO processes the reply to the Notice, the USPTO will generate another Filing Receipt incorporating the requested corrections**

Applicant(s)

James M. Tour, Bellaire, TX;
Dmitry V. Kosynkin, Houston, TX;
Amanda Duque, Los Alamos, NM;
Brandi Katherine Price, Houston, TX;

Power of Attorney: The patent practitioners associated with Customer Number 61060

Domestic Priority data as claimed by applicant

This appln claims benefit of 61/090,125 08/19/2008
and claims benefit of 61/178,136 05/14/2009
and claims benefit of 61/153,873 02/19/2009
and claims benefit of 61/180,505 05/22/2009
and claims benefit of 61/185,640 06/10/2009
and claims benefit of 61/187,071 06/15/2009
and claims benefit of 61/187,130 06/15/2009

Foreign Applications

If Required, Foreign Filing License Granted: 07/31/2010

The country code and number of your priority application, to be used for filing abroad under the Paris Convention, is **US 12/544,017**

Projected Publication Date: Not Applicable

Non-Publication Request: No

Early Publication Request: No

**** SMALL ENTITY ****

Title

Methods for Preparation of Graphene Nanoribbons From Carbon Nanotubes and Compositions, Thin Films and Devices Derived Therefrom

Preliminary Class

525

PROTECTING YOUR INVENTION OUTSIDE THE UNITED STATES

Since the rights granted by a U.S. patent extend only throughout the territory of the United States and have no effect in a foreign country, an inventor who wishes patent protection in another country must apply for a patent in a specific country or in regional patent offices. Applicants may wish to consider the filing of an international application under the Patent Cooperation Treaty (PCT). An international (PCT) application generally has the same effect as a regular national patent application in each PCT-member country. The PCT process **simplifies** the filing of patent applications on the same invention in member countries, but **does not result** in a grant of "an international patent" and does not eliminate the need of applicants to file additional documents and fees in countries where patent protection is desired.

Almost every country has its own patent law, and a person desiring a patent in a particular country must make an application for patent in that country in accordance with its particular laws. Since the laws of many countries differ in various respects from the patent law of the United States, applicants are advised to seek guidance from specific foreign countries to ensure that patent rights are not lost prematurely.

Applicants also are advised that in the case of inventions made in the United States, the Director of the USPTO must issue a license before applicants can apply for a patent in a foreign country. The filing of a U.S. patent application serves as a request for a foreign filing license. The application's filing receipt contains further information and guidance as to the status of applicant's license for foreign filing.

Applicants may wish to consult the USPTO booklet, "General Information Concerning Patents" (specifically, the section entitled "Treaties and Foreign Patents") for more information on timeframes and deadlines for filing foreign patent applications. The guide is available either by contacting the USPTO Contact Center at 800-786-9199, or it can be viewed on the USPTO website at http://www.uspto.gov/web/offices/pac/doc/general/index.html.

For information on preventing theft of your intellectual property (patents, trademarks and copyrights), you may wish to consult the U.S. Government website, http://www.stopfakes.gov. Part of a Department of Commerce initiative, this website includes self-help "toolkits" giving innovators guidance on how to protect intellectual property in specific countries such as China, Korea and Mexico. For questions regarding patent enforcement issues, applicants may call the U.S. Government hotline at 1-866-999-HALT (1-866-999-4158).

LICENSE FOR FOREIGN FILING UNDER

Title 35, United States Code, Section 184

Title 37, Code of Federal Regulations, 5.11 & 5.15

GRANTED

The applicant has been granted a license under 35 U.S.C. 184, if the phrase "IF REQUIRED, FOREIGN FILING LICENSE GRANTED" followed by a date appears on this form. Such licenses are issued in all applications where

the conditions for issuance of a license have been met, regardless of whether or not a license may be required as set forth in 37 CFR 5.15. The scope and limitations of this license are set forth in 37 CFR 5.15(a) unless an earlier license has been issued under 37 CFR 5.15(b). The license is subject to revocation upon written notification. The date indicated is the effective date of the license, unless an earlier license of similar scope has been granted under 37 CFR 5.13 or 5.14.

This license is to be retained by the licensee and may be used at any time on or after the effective date thereof unless it is revoked. This license is automatically transferred to any related applications(s) filed under 37 CFR 1.53(d). This license is not retroactive.

The grant of a license does not in any way lessen the responsibility of a licensee for the security of the subject matter as imposed by any Government contract or the provisions of existing laws relating to espionage and the national security or the export of technical data. Licensees should apprise themselves of current regulations especially with respect to certain countries, of other agencies, particularly the Office of Defense Trade Controls, Department of State (with respect to Arms, Munitions and Implements of War (22 CFR 121-128)); the Bureau of Industry and Security, Department of Commerce (15 CFR parts 730-774); the Office of Foreign AssetsControl, Department of Treasury (31 CFR Parts 500+) and the Department of Energy.

NOT GRANTED

No license under 35 U.S.C. 184 has been granted at this time, if the phrase "IF REQUIRED, FOREIGN FILING LICENSE GRANTED" DOES NOT appear on this form. Applicant may still petition for a license under 37 CFR 5.12, if a license is desired before the expiration of 6 months from the filing date of the application. If 6 months has lapsed from the filing date of this application and the licensee has not received any indication of a secrecy order under 35 U.S.C. 181, the licensee may foreign file the application pursuant to 37 CFR 5.15(b).

UNITED STATES PATENT AND TRADEMARK OFFICE

Commissioner for Patents
United States Patent and Trademark Office
P.O. Box 1450
Alexandria, VA 22313-1450
www.uspto.gov

ADDMG - 27975
1401 CITRUS CENTER 255 SOUTH ORANGE AVENUE
P.O. BOX 3791
ORLANDO FL 32802-3791

MAILED
JAN 12 2012
OFFICE OF PETITIONS

In re Application of	:	
Henry M. Whetstone, Jr.	:	
Application No. 12/544,032	:	DECISION ON PETITION
Filed: August 19, 2009	:	TO WITHDRAW
Attorney Docket No. 60387	:	FROM RECORD
	:	

This is a decision on the Request to Withdraw as attorney or agent of record under 37 C.F.R. § 1.36(b), filed December 20, 2011.

The request is **APPROVED**.

A grantable request to withdraw as attorney/agent of record must be signed by every attorney/agent seeking to withdraw or contain a clear indication that one attorney is signing on behalf of another/others. A request to withdraw will not be approved unless at least 30 (thirty) days would remain between the date of approval and the later of the expiration date of a time to file a response or the expiration date of the maximum time period which can be extended under 37 C.F.R. § 1.136(a).

The request was signed by Jeremy B. Berman on behalf of all attorneys/agents associated with customer number 27975. All attorneys/agents associated with customer number 27975 have been withdrawn.

Applicant is reminded that there is no attorney of record at this time.

The correspondence address has been changed and is copied below.

Telephone inquiries concerning this decision should be directed to Kimberly Inabinet at 571-272-4618.

/Kimberly Inabinet/

Kimberly Inabinet
Petitions Examiner
Office of Petitions

cc: Henry M. Whetstone, Jr.
Whetstone Industrial Holdings, Inc.
100 Whetstone Place, Suite 100
St. Augustine, FL 32086

UNITED STATES PATENT AND TRADEMARK OFFICE

UNITED STATES DEPARTMENT OF COMMERCE
United States Patent and Trademark Office
Address: COMMISSIONER FOR PATENTS
P.O. Box 1450
Alexandria, Virginia 22313-1450
www.uspto.gov

APPLICATION NUMBER	FILING OR 371(C) DATE	FIRST NAMED APPLICANT	ATTY. DOCKET NO./TITLE
12/544,032	08/19/2009	Henry M. Whetstone JR.	60387

CONFIRMATION NO. 8538

POWER OF ATTORNEY NOTICE

27975
ADDMG - 27975
1401 CITRUS CENTER 255 SOUTH ORANGE AVENUE
P.O. BOX 3791
ORLANDO, FL 32802-3791

OC000000051977020

Date Mailed: 01/12/2012

NOTICE REGARDING CHANGE OF POWER OF ATTORNEY

This is in response to the Power of Attorney filed 12/20/2011.

- The withdrawal as attorney in this application has been accepted. Future correspondence will be mailed to the new address of record. 37 CFR 1.33.

/kainabinet/

Office of Data Management, Application Assistance Unit (571) 272-4000, or (571) 272-4200, or 1-888-786-0101

UNITED STATES PATENT AND TRADEMARK OFFICE

Commissioner for Patents
United States Patent and Trademark Office
P.O. Box 1450
Alexandria, VA 22313-1450
www.uspto.gov

ADDMG - 27975
1401 CITRUS CENTER 255 SOUTH ORANGE AVENUE
P.O. BOX 3791
ORLANDO FL 32802-3791

MAILED

JAN 30 2012

OFFICE OF PETITIONS

In re Application of	:	
WHETSTONE, JR., Henry M.	:	
Application No. 12/544,050	:	DECISION ON PETITION
Filed: August 19, 2009	:	TO WITHDRAW
Attorney Docket No. **60388**	:	FROM RECORD
	:	

This is a decision on the Request to Withdraw as attorney or agent of record under 37 C.F.R. § 1.36(b), filed December 20, 2011.

The request is **APPROVED**.

A grantable request to withdraw as attorney/agent of record must be signed by every attorney/agent seeking to withdraw or contain a clear indication that one attorney is signing on behalf of another/others. The Office requires the practitioner(s) requesting withdrawal to certify that he, she, or they have: (1) given reasonable notice to the client, prior to the expiration of the response period, that the practitioner(s) intends to withdraw from employment; (2) delivered to the client or a duly authorized representative of the client all papers and property (including funds) to which the client is entitled; and (3) notified the client of any responses that may be due and the time frame within which the client must respond, pursuant 37 CFR 10.40(c).

The request was signed by Jeremy Berman on behalf of all attorneys of record who are associated with customer No. 27975. All attorneys/agents associated have been withdrawn. Applicant is reminded that there is no attorney of record at this time.

All future correspondence will be directed to the first named inventor Henry M. Whetstone, Jr. at the address indicated below.

There are no outstanding Office actions at this time.

Telephone inquiries concerning this decision should be directed to the undersigned at 571-272-4231.

/Michelle R. Eason/
Michelle R. Eason
Paralegal Specialist
Office of Petitions

cc: **HENRY M. WHETSTONE, JR.**
WHETSTONE INDUSTRIAL HOLDINGS, INC.
100 WHETSTONE PLACE
SUITE 100
ST, AUGUSTINE, FL 32086

UNITED STATES PATENT AND TRADEMARK OFFICE

Commissioner for Patents
United States Patent and Trademark Office
P.O. Box 1450
Alexandria, VA 22313-1450
www.uspto.gov

ADDMG - 27975
1401 CITRUS CENTER 255 SOUTH ORANGE AVENUE
P.O. BOX 3791
ORLANDO FL 32802-3791

MAILED

JAN 13 2012

OFFICE OF PETITIONS

In re Application of	:	
Henry M. Whetstone, Jr.	:	
Application No. 12/544,063	:	DECISION ON PETITION
Filed: August 19, 2009	:	TO WITHDRAW
Attorney Docket No. 60389	:	FROM RECORD
	:	

This is a decision on the Request to Withdraw as attorney or agent of record under 37 C.F.R. § 1.36(b), filed December 20, 2011.

The request is **APPROVED**.

A grantable request to withdraw as attorney/agent of record must be signed by every attorney/agent seeking to withdraw or contain a clear indication that one attorney is signing on behalf of another/others. A request to withdraw will not be approved unless at least 30 (thirty) days would remain between the date of approval and the later of the expiration date of a time to file a response or the expiration date of the maximum time period which can be extended under 37 C.F.R. § 1.136(a).

The request was signed by Jeremy B. Berman on behalf of all attorneys/agents associated with customer number 27975. All attorneys/agents associated with customer number 27975 have been withdrawn.

Applicant is reminded that there is no attorney of record at this time.

The correspondence address has been changed and is copied below.

Telephone inquiries concerning this decision should be directed to Kimberly Inabinet at 571-272-4618.

/Kimberly Inabinet/

Kimberly Inabinet
Petitions Examiner
Office of Petitions

cc: Henry M. Whetstone, Jr.
Whetstone Industrial Holdings, Inc.
100 Whetstone Place, Suite 100
St. Augustine, FL 32086

UNITED STATES PATENT AND TRADEMARK OFFICE

UNITED STATES DEPARTMENT OF COMMERCE
United States Patent and Trademark Office
Address: COMMISSIONER FOR PATENTS
P.O. Box 1450
Alexandria, Virginia 22313-1450
www.uspto.gov

APPLICATION NUMBER	FILING OR 371(C) DATE	FIRST NAMED APPLICANT	ATTY. DOCKET NO./TITLE
12/544,063	08/19/2009	Henry M. Whetstone JR.	60389

CONFIRMATION NO. 8588

POWER OF ATTORNEY NOTICE

27975
ADDMG - 27975
1401 CITRUS CENTER 255 SOUTH ORANGE AVENUE
P.O. BOX 3791
ORLANDO, FL 32802-3791

OC000000051977269

Date Mailed: 01/12/2012

NOTICE REGARDING CHANGE OF POWER OF ATTORNEY

This is in response to the Power of Attorney filed 12/20/2011.

- The withdrawal as attorney in this application has been accepted. Future correspondence will be mailed to the new address of record. 37 CFR 1.33.

/kainabinet/

Office of Data Management, Application Assistance Unit (571) 272-4000, or (571) 272-4200, or 1-888-786-0101

UNITED STATES PATENT AND TRADEMARK OFFICE

Commissioner for Patents
United States Patent and Trademark Office
P.O. Box 1450
Alexandria, VA 22313-1450
www.uspto.gov

SILVERSKY GROUP LLC
5422 LONGLEY LANE, SUITE B
RENO NV 89511

MAILED
NOV 18 2010
OFFICE OF PETITIONS

In re Application of	:	
Michael Carroll	:	DECISION ON PETITION
Application No. 12/544,085	:	TO WITHDRAW
Filed: August 19, 2009	:	FROM RECORD
Attorney Docket No. **300040-00001**	:	

This is a decision on the request to withdraw as attorney of record under 37 CFR § 1.36(b), filed April 12, 2010.

The request is **APPROVED**.

A grantable request to withdraw as attorney/agent of record must be signed by every attorney/agent seeking to withdraw or contain a clear indication that one attorney is signing on behalf of another/others. The Office requires the practitioner(s) requesting withdrawal to certify that he, she, or they have: (1) given reasonable notice to the client, prior to the expiration of the response period, that the practitioner(s) intends to withdraw from employment; (2) delivered to the client or a duly authorized representative of the client all papers and property (including funds) to which the client is entitled; and (3) notified the client of any responses that may be due and the time frame within which the client must respond , pursuant to 37 CFR 10.40.

The request was signed by Timothy D. Casey on behalf of all attorneys of record who are associated with Customer Number 71375.

All attorneys/agents associated with Customer Number 71375 have been withdrawn.

Applicant is reminded that there is no attorney of record at this time.

The correspondence address of record has been changed and all future correspondence will be directed to the first named inventor Michael Carroll at the address indicated below.

There is no outstanding Office action that requires a reply from the applicant.

Telephone inquiries concerning this decision should be directed to the undersigned at 571-272-4584.

/JoAnne Burke/
JoAnne Burke
Petitions Examiner
Office of Petitions

cc: Michael Carroll
P.O. Box 5143
Incline Village, NV 89450

UNITED STATES PATENT AND TRADEMARK OFFICE

Commissioner for Patents
United States Patent and Trademark Office
P.O. Box 1450
Alexandria, VA 22313-1450
www.uspto.gov

McDermott Will & Emery, LLP
600 13th Street, NW
Washington, DC 20005-3096

MAILED

JUL 15 2011

OFFICE OF PETITIONS

In re Application of
L. Michael Cutrer, et. al.
Application No. 12/544,101
Filed: August 19, 2009
Attorney Docket No. 087098-0011

DECISION ON PETITION TO WITHDRAW FROM RECORD

This is a decision on the Request to Withdraw as attorney or agent of record under 37 CFR §§ 1.36(b) or 10.40 filed June 24, 2011.

The request is **NOT APPROVED**.

The Office will no longer approve requests from practitioners to withdraw from application where the requesting practitioners is acting, or has acted, in a representative capacity pursuant to 37 CFR 1.34. In these situations, the practitioner is responsible for the correspondence the practitioner files in the application while acting in a representative capacity. As such, there is no need for the practitioner to obtain the Office's permission to withdraw from representation. However, practitioners acting in a representative capacity, like practitioners who have power of attorney in the application, remain responsible for noncompliance with 37 CFR 1.56, as well as 37 CFR 10.18, with respect to the documents they file.

The Office strongly encourages practitioner(s) requesting withdrawal from representation as practitioner of record in an application to review the record to determine whether he or she is, in fact, of record and how he or she was made of record. The practitioner(s) should determine whether he or she was appointed by naming each practitioner individually or through the use of a Customer Number. If the practitioner(s) were appointed by a specific designation, then the request should ask that each specified practitioner be withdrawn and should list each practitioner(s) in the Request. Similarly, if practitioner(s) was appointed by a Customer Number, the practitioner(s) should ensure that the correct number is provided in the Request. Additionally, as set forth in MPEP 403(I), the addition or deletion of a practitioner from the list of persons associated with a Customer Number should be done by way of a *Request for Customer umber Data Change* (PTO/SB/124) and not a *Request for Withdrawal As Attorney or Agent and Change of Correspondence Address* (PTO/SB/83).

Further, a review of the file record indicates that Marc E. Brown and the attorneys/agents associated with Customer Number 33401 do not have power of attorney in this patent application, but has been employed or otherwise engaged in the proceedings in this patent application. Accordingly, the request to withdraw under 37 CFR § 1.36(b) is not applicable.

All future communications from the Office will continue to be directed to the above listed address until otherwise properly notified by the applicant.

Telephone inquiries concerning this decision should be directed to the undersigned at (571) 272-3226.

Andrea Smith
Petitions Examiner
Office of Petitions

cc: Tibet Changdu Huiheng Development Co. Ltd.
Huiheng Building, GaoXin 7 Street South
Keyuannan Road, Nansan District
Shenzhen Guangdong 518057
CHINA

UNITED STATES PATENT AND TRADEMARK OFFICE

Commissioner for Patents
United States Patent and Trademark Office
P.O. Box 1450
Alexandria, VA 22313-1450
www.uspto.gov

DORSEY & WHITNEY LLP
INTELLECTUAL PROPERTY DEPARTMENT
SUITE 1500
50 SOUTH SIXTH STREET
MINNEAPOLIS MN 55402-1498

MAILED

JAN 10 2011

OFFICE OF PETITIONS

In re Application of	:	
Stephen K. Sundquist et al.	:	
Application No. 12/544,119	:	DECISION ON PETITION
Filed: August 19, 2009	:	
Attorney Docket No. 190418/US/2	:	

This is a decision on the petition under the unintentional provisions of 37 CFR 1.137(b), filed October 22, 2010, to revive the above-identified application.

The petition is **GRANTED**.

The application became abandoned for failure to reply in a timely manner to the Notice of File Corrected Application Papers, mailed September 1, 2009. The Notice set a period for reply of two (2) months from the mail date of the Notice. No extensions of time under the provisions of 37 CFR 1.136(a) were obtained. Accordingly, the application became abandoned on November 2, 2009. A Notice of Abandonment was mailed on September 15, 2010.

The petition satisfies the requirements of 37 CFR 1.137(b) in that petitioner has supplied (1) the reply in the form of replacement drawings, (2) the petition fee of $810, (3) a proper statement of unintentional delay. Accordingly the replacement drawings are accepted as being unintentionally delayed.

37 CFR 1.137(b)(3) requires a statement that "the entire delay in filing the required reply from the due date for the reply until the filing of a grantable petition pursuant to 37 CFR 1.137(b) was unintentional." Since the statement appearing in the petition varies from the language required by 37 CFR 1.137(b)(3), the statement is being construed as the required statement. Petitioner must notify the Office if this is **not** a correct reading of the statement appearing in the petition.

Telephone inquiries concerning this decision should be directed to Kimberly Inabinet at (571) 272-4618.

Application No. 12/544,119

This application is being referred to the Office of Patent Application Processing for appropriate action in the normal course of business on the reply received October 22, 2010.

/Kimberly Inabinet/

Kimberly Inabinet
Petitions Examiner
Office of Petitions

UNITED STATES PATENT AND TRADEMARK OFFICE

Commissioner for Patents
United States Patent and Trademark Office
P.O. Box 1450
Alexandria, VA 22313-1450
www.uspto.gov

DORSEY & WHITNEY, LLP
INTELLECTUAL PROPERTY DEPARTMENT
1400 WEWATTA STREET
SUITE 400
DENVER, CO 80202-5549

MAILED

NOV 17 2011

OFFICE OF PETITIONS

In re Application of :
Archana Gangakhedkar, et al. :
Application No.: 12/544,133 :
Filed: August 19, 2009 :
Attorney Docket No.: P190481.US.02 :

ON PETITION

This is a decision on the petition, filed November 16, 2011, under 37 CFR 1.313(c)(2) to withdraw the above-identified application from issue after payment of the issue fee.

The petition is **GRANTED**.

The above-identified application is withdrawn from issue for consideration of a submission under 37 CFR 1.114 (request for continued examination). See 37 CFR 1.313(c)(2).

Petitioner is advised that the issue fee paid on October 27, 2011, cannot be refunded. If, however, this application is again allowed, petitioner may request that it be applied towards the issue fee required by the new Notice of Allowance.[1]

Telephone inquiries relating to this decision should be directed to the undersigned at (571) 272-3204.

The application is being referred to Technology Center AU 1626 for further processing of the request for continued examination and for consideration of the concurrently filed Information Disclosure Statement (IDS).

/SDB/

Sherry D. Brinkley
Petitions Examiner
Office of Petitions

[1] *The request to apply the issue fee to the new Notice may be satisfied by completing and returning the new Part B – Fee(s) Transmittal Form (along with any balance due at the time of submission). Petitioner is advised that the Issue Fee Transmittal Form must be completed and timely submitted to avoid abandonment of the application.*

IN THE UNITED STATES PATENT AND TRADEMARK OFFICE

Applicants	:	Cynthia Tolibas-Spurlock et al.
Application No.	:	12/544,150
Filed	:	August 19, 2009
For	:	COMPOSTABLE CONTAINER FOR STORING FLUIDS

Art Unit	:	1794
Docket No.	:	410129.401
Date	:	November 30, 2010

Mail Stop Amendment
Commissioner for Patents
P.O. Box 1450
Alexandria, VA 22313-1450

PETITION TO MAKE SPECIAL UNDER THE GREEN TECHNOLOGY PILOT PROGRAM

Commissioner for Patents:

Applicant hereby requests to participate in the Green Technology Pilot Program for the above-identified application.

By filing this petition:

☐ Applicant hereby requests early publication under 37 CFR 1.219 and the publication fee set forth in 37 CFR 1.18(d) accompanies this request. The Commissioner is hereby authorized to charge Deposit Account No. (Order No.:) for the amount of $.

☒ Since this application was already published on February 25, 2010 , it is believed that there is no need to request early publication under 37 CFR 1.219 nor pay the publication fee set forth in 37 CFR 1.18(d). However, if the Office determines that another publication is necessary, the Commissioner is hereby authorized to charge our Deposit Account No. 19-1090 for any additional fees due.

By filing this petition, Applicant is agreeing to make an election without traverse in a telephonic interview and elect an invention that meets the eligibility requirement and the

classification requirement set forth in the Federal Register notice entitled "Pilot Program for Green Technologies Including Greenhouse Gas Reduction" that was published in the Federal Register if the Office determines that the claims are not obviously directed to a single invention.

STATEMENTS OF SPECIAL STATUS FOR THE ELIGIBILITY REQUIREMENT

The basis for the special status is that the invention claimed in the above-identified patent application materially enhances the equality of the environment. The claimed invention relates to a compostable container having various components, which are all configured to biodegrade in ambient conditions into nontoxic residue. This invention will avoid and replace the use of plastic in containers, such as water bottles and food containers. Both the manufacture of plastics and the disposal of plastics produce toxic byproducts that are harmful to the environment. In contrast, all components of this compostable container are fully biodegradable in a user's backyard.

REMARKS

A preliminary amendment has been submitted herewith to reduce the number of outstanding claims to no more than three (3) independent claims and twenty (20) total claims.

The application does not contain any multiple dependent claims.

Should the Commissioner feel that a telephone conference would expedite the granting of this petition, the Commissioner is invited to contact the undersigned attorney at (206) 622-4900.

Respectfully submitted,

SEED Intellectual Property Law Group PLLC

/Hayley J. Stevens/

Hayley J. Stevens
Registration No. 65,875

HJS:ks
701 Fifth Avenue, Suite 5400
Seattle, Washington 98104
Phone: (206) 622-4900
Fax: (206) 682-6031

UNITED STATES PATENT AND TRADEMARK OFFICE

UNITED STATES DEPARTMENT OF COMMERCE
United States Patent and Trademark Office
Address: COMMISSIONER FOR PATENTS
P.O. Box 1450
Alexandria, Virginia 22313-1450
www.uspto.gov

APPLICATION NO.	FILING DATE	FIRST NAMED INVENTOR	ATTORNEY DOCKET NO.	CONFIRMATION NO.
12/544,150	08/19/2009	Cynthia Tolibas-Spurlock	410129.401	8754

500 7590 12/07/2010
SEED INTELLECTUAL PROPERTY LAW GROUP PLLC
701 FIFTH AVE
SUITE 5400
SEATTLE, WA 98104

EXAMINER
PICKETT, JOHN G

ART UNIT	PAPER NUMBER
3728	

MAIL DATE	DELIVERY MODE
12/07/2010	PAPER

Please find below and/or attached an Office communication concerning this application or proceeding.

The time period for reply, if any, is set in the attached communication.

UNITED STATES PATENT AND TRADEMARK OFFICE

Commissioner for Patents
United States Patent and Trademark Office
P.O. Box 1450
Alexandria, VA 22313-1450
www.uspto.gov

SEED INTELLECTUAL PROPERTY LAW GROUP PLLC
701 FIFTH AVE
SUITE 5400
SEATTLE WA 98104

In re Application of	:	
TOLIBAS-SPURLOCK, CYNTHIA et al	:	DECISION ON PETITION
Application No. 12/544,150	:	TO MAKE SPECIAL UNDER
Filed: August 19, 2009	:	THE GREEN TECHNOLOGY
Attorney Docket No. 410129.401	:	PILOT PROGRAM

This is a decision on the petition under 37 CFR 1.102, filed Nov. 30, 2010, to make the above-identified application special under the pilot program for applications pertaining to Green Technologies as set forth in 74 Federal Register Notice 64666 (December 8, 2009) and amended by 75 Federal Register Notice 28554 (May 21, 2010) and 75 Federal Register Notice 69049 (November 10, 2010).

The petition is **DISMISSED**.

If reconsideration of this decision is desired, a petition for reconsideration must be filed within ONE (1) MONTH OR THIRTY (30) DAYS from the mail date of this decision, whichever is longer. No extension of this time limit can be granted under 37 CFR 1.136(a) or (b). The petition for reconsideration should include an exhaustive attempt to provide the lacking item(s) noted below, since, after a decision on the petition for reconsideration, no further reconsideration or review of the matter will be undertaken by the Director.

A grantable petition to make an application special under 37 CFR 1.102 and the pilot program as set forth in 74 FR 64666 must be directed to a nonprovisional application filed under 35 USC 111(a) or be a national stage entry under 35 USC 371, exclusive of any reissue applications.

In order to qualify for special status, the following requirements must be met. 1) The application must have no more than 3 independent claims and no more than 20 total claims. 2) The application must not contain any multiple dependent claims. 3) The petition must state the basis for seeking special status, i.e., the claimed invention either: A) materially enhances the quality of the environment or B) materially contributes to: i) the discovery or development of renewable energy resources, ii) the more efficient utilization and conservation of energy resources, or iii)

greenhouse gas emission reduction. 4) If the disclosure is not clear on its face that the claimed invention materially contributes under category (A) or (B), the petition must be accompanied by a statement by the applicant, assignee, or an attorney/agent registered to practice before the Office explaining how the materiality standard is met. 5) A statement that applicant will agree to make an election without traverse in a telephonic interview if a restriction requirement is made by the examiner. 6) The petition to make special must be filed electronically. 7) The petition must be filed at least one day prior to the date that a first Office Action appears in the Patent Application Information Retrieval (PAIR) system. 8) The petition must be accompanied by a request for early publication in compliance with 37 CFR 1.219 and include the publication fee as set forth in 37 CFR 1.18(d).

The requirement for a fee for consideration of the petition to make special for applications pertaining to Green Technologies has been waived.

The petition lacks item # 8.

In regard to item 8, petitioner should note that since no request in compliance with 37 CFR 1.219 has been made for the early publication of the present application and the publication fee $300.00 as set forth in 37 CFR 1.18(d) has not been received, the petition is dismissed.

Any reconsideration of this decision should be submitted through the USPTO electronic filing system, EFS-Web, and selecting the document description of "Petition for Green Tech Pilot" on the EFS-Web screen.

Telephone inquiries concerning this decision should be directed to Henry C. Yuen at 571-272-4856.

This application will be forwarded to the Technology Center Art Unit 3728 for action in its regular turn.

/Henry C. Yuen/

Henry C. Yuen
Quality Assurance Specialist
Technology Center 3700

PATENT

IN THE UNITED STATES PATENT AND TRADEMARK OFFICE

Applicants	:	Cynthia Tolibas-Spurlock et al.
Application No.	:	12/544,150
Filed	:	August 19, 2009
For	:	COMPOSTABLE CONTAINER FOR STORING FLUIDS

Art Unit	:	3728
Docket No.	:	410129.401
Date	:	January 7, 2011

Mail Stop Petition
Commissioner for Patents
P.O. Box 1450
Alexandria, VA 22313-1450

REQUEST FOR RECONSIDERATION

Commissioner for Patents:

Applicants hereby request reconsideration of the Decision on Petition under 37 C.F.R. § 1.102.

Statement of Facts

Applicants filed a Petition to Make Special Under the Green Technology Pilot Program and Preliminary Amendment on November 30, 2010.

On December 7, 2010, the U.S. Patent and Trademark Office Dismissed the Petition for failure to meet requirement #8 set forth under 37 C.F.R. § 1.102 and the Pilot Program under 74 F.R. Notice 64666 and amended by 75 F.R. Notice 28554 and 75 F.R. Notice 69049. Requirement #8 states that the "petition must be accompanied by a request for early publication in compliance with 37 C.F.R. § 1.219 and include the publication fee as set forth in 37 C.F.R. § 1.18(d).

Since this application published on February 25, 2010, it was believed there was no need to request early publication under 37 C.F.R. § 1.219. However, Applicants' Petition

authorized the U.S. Patent Office to charge Deposit Account No. 19-1090 for any additional fees due.

Submitted herewith is the required $300 publication fee to satisfy requirement #8. The Office of Petitions is encouraged to contact the undersigned by telephone to resolve any further issues with this Request.

Summary

In view of the foregoing, Applicants believe that all deficiencies in this application have been resolved and request this Petition be approved.

The Director is authorized to charge any additional fees due by way of this Request, or credit any overpayment, to our Deposit Account No. 19-1090.

Respectfully submitted,

SEED Intellectual Property Law Group PLLC

/David V. Carlson/

David V. Carlson
Registration No. 31,153

DVC/HJS:ks

701 Fifth Avenue, Suite 5400
Seattle, Washington 98104
Phone: (206) 622-4900
Fax: (206) 682-6031

1780744_1.DOCX

UNITED STATES PATENT AND TRADEMARK OFFICE

UNITED STATES DEPARTMENT OF COMMERCE
United States Patent and Trademark Office
Address: COMMISSIONER FOR PATENTS
P.O. Box 1450
Alexandria, Virginia 22313-1450
www.uspto.gov

APPLICATION NO.	FILING DATE	FIRST NAMED INVENTOR	ATTORNEY DOCKET NO.	CONFIRMATION NO.
12/544,150	08/19/2009	Cynthia Tolibas-Spurlock	410129.401	8754

500 7590 01/20/2011
SEED INTELLECTUAL PROPERTY LAW GROUP PLLC
701 FIFTH AVE
SUITE 5400
SEATTLE, WA 98104

EXAMINER
PICKETT, JOHN G

ART UNIT	PAPER NUMBER
3728	

MAIL DATE	DELIVERY MODE
01/20/2011	PAPER

Please find below and/or attached an Office communication concerning this application or proceeding.

The time period for reply, if any, is set in the attached communication.

UNITED STATES PATENT AND TRADEMARK OFFICE

Commissioner for Patents
United States Patent and Trademark Office
P.O. Box 1450
Alexandria, VA 22313-1450
www.uspto.gov

SEED INTELLECTUAL PROPERTY LAW GROUP PLLC
701 FIFTH AVE
SUITE 5400
SEATTLE WA 98104

In re Application of	:	
TOLIBAS-SPURLOCK, CYNTHIA et al	:	DECISION ON PETITION
Application No. 12/544,150	:	TO MAKE SPECIAL UNDER
Filed: August 19, 2009	:	THE GREEN TECHNOLOGY
Attorney Docket No. 410129.401	:	PILOT PROGRAM

This is a decision on the renewed petition under 37 CFR 1.102, filed Jan. 7, 2011, to make the above-identified application special under the pilot program for applications pertaining to Green Technologies as set forth in 74 Federal Register Notice 64666 (December 8, 2009) and amended by 75 Federal Register Notice 28554 (May 21, 2010) and 75 Federal Register Notice 69049 (November 10, 2010).

The petition is Granted.

If reconsideration of this decision is desired, a petition for reconsideration must be filed within ONE (1) MONTH OR THIRTY (30) DAYS from the mail date of this decision, whichever is longer. No extension of this time limit can be granted under 37 CFR 1.136(a) or (b). The petition for reconsideration should include an exhaustive attempt to provide the lacking item(s) noted below, since, after a decision on the petition for reconsideration, no further reconsideration or review of the matter will be undertaken by the Director.

A grantable petition to make an application special under 37 CFR 1.102 and the pilot program as set forth in 74 FR 64666 must be directed to a nonprovisional application filed under 35 USC 111(a) or be a national stage entry under 35 USC 371, exclusive of any reissue applications.

In order to qualify for special status, the following requirements must be met. 1) The application must have no more than 3 independent claims and no more than 20 total claims. 2) The application must not contain any multiple dependent claims. 3) The petition must state the basis for seeking special status, i.e., the claimed invention either: A) materially enhances the quality of the environment or B) materially contributes to: i) the discovery or development of renewable energy resources, ii) the more efficient utilization and conservation of energy resources, or iii)

greenhouse gas emission reduction. 4) If the disclosure is not clear on its face that the claimed invention materially contributes under category (A) or (B), the petition must be accompanied by a statement by the applicant, assignee, or an attorney/agent registered to practice before the Office explaining how the materiality standard is met. 5) A statement that applicant will agree to make an election without traverse in a telephonic interview if a restriction requirement is made by the examiner. 6) The petition to make special must be filed electronically. 7) The petition must be filed at least one day prior to the date that a first Office Action appears in the Patent Application Information Retrieval (PAIR) system. 8) The petition must be accompanied by a request for early publication in compliance with 37 CFR 1.219 and include the publication fee as set forth in 37 CFR 1.18(d).

The requirement for a fee for consideration of the petition to make special for applications pertaining to Green Technologies has been waived.

The instant petition complies with items 1 – 8 above. Accordingly, the above-identified application has been accorded "special" status.

Telephone inquires concerning this decision should be directed to Henry C. Yuen at 571-272-4856.

This application will be forwarded to the Technology Center Art Unit 3728 for action on the merits commensurate with this decision.

/Henry C. Yuen/

Henry C. Yuen
Quality Assurance Specialist
Technology Center TC 3700

The petition lacks item # 8.

In regard to item 8, petitioner should note that since no request in compliance with 37 CFR 1.219 has been made for the early publication of the present application and the publication fee $300.00 as set forth in 37 CFR 1.18(d) has not been received, the petition is dismissed.

Any reconsideration of this decision should be submitted through the USPTO electronic filing system, EFS-Web, and selecting the document description of "Petition for Green Tech Pilot" on the EFS-Web screen.

Telephone inquiries concerning this decision should be directed to Henry C. Yuen at 571-272-4856.

This application will be forwarded to the Technology Center Art Unit 3728 for action in its regular turn.

/Henry C. Yuen/

Henry C. Yuen
Quality Assurance Specialist
Technology Center 3700

UNITED STATES PATENT AND TRADEMARK OFFICE

Commissioner for Patents
United States Patent and Trademark Office
P.O. Box 1450
Alexandria, VA 22313-1450
www.uspto.gov

GLOBAL PATENT GROUP - KAL
1005 North Warson Road
Suite 201
St. Louis MO 63132

MAILED
FEB 14 2012
OFFICE OF PETITIONS

In re Application of	:	
Govek, et al.	:	
Application No. 12/544,185	:	NOTICE
Filed: August 19, 2009	:	
Atty. Dkt. No.: K0058-201CIP-US	:	

This is a notice regarding your request for acceptance of a fee deficiency submission under 37 CFR 1.28.

The Office no longer investigates or rejects original or reissue applications under 37 CFR 1.56. **1098 Off. Gaz. Pat. Office 502 (January 3, 1989)**. Therefore, nothing in this Notice is intended to imply that an investigation was done.

Your fee deficiency submission under 37 CFR 1.28 is hereby **ACCEPTED**.

This application is no longer entitled to small entity status. Accordingly, all future fees paid in this application must be paid at the large entity rate.

Inquiries related to this communication should be directed to the undersigned at (571) 272-3205.

/ALESIA M. BROWN/

Alesia M. Brown
Attorney Advisor
Office of Petitions

UNITED STATES PATENT AND TRADEMARK OFFICE

UNITED STATES DEPARTMENT OF COMMERCE
United States Patent and Trademark Office
Address: COMMISSIONER FOR PATENTS
P.O. Box 1450
Alexandria, Virginia 22313-1450
www.uspto.gov

APPLICATION NO.	FILING DATE	FIRST NAMED INVENTOR	ATTORNEY DOCKET NO.	CONFIRMATION NO.
12/544,240	08/20/2009	Koji Inagaki	U 017843-9	8949

140 7590 03/15/2011
LADAS & PARRY LLP
1040 Avenue of the Americas
NEW YORK, NY 10018-3738

EXAMINER
BANKS HAROLD, MARSHA DENISE

ART UNIT	PAPER NUMBER
2482	

NOTIFICATION DATE	DELIVERY MODE
03/15/2011	ELECTRONIC

Please find below and/or attached an Office communication concerning this application or proceeding.

The time period for reply, if any, is set in the attached communication.

Notice of the Office communication was sent electronically on above-indicated "Notification Date" to the following e-mail address(es):

nyuspatactions@ladas.com
nymail@ladas.com

UNITED STATES PATENT AND TRADEMARK OFFICE

Commissioner for Patents
United States Patent and Trademark Office
P.O. Box 1450
Alexandria, VA 22313-1450
www.uspto.gov

MAILED

MAR 15 2011

DIRECTOR OFFICE
TECHNOLOGY CENTER 2400

LADAS & PARRY LLP
26 WEST 61st STREET
NEW YORK, NY 10023

In re Application of	:	
INAGAKI, KOJI	:	DECISION ON REQUEST TO
Application No. 12/544,240	:	PARTICIPATE IN PATENT
Filed: August 20, 2009	:	PROSECUTION HIGHWAY
Attorney Docket No. **U 017843-9**	:	PROGRAM AND PETITION
	:	TO MAKE SPECIAL UNDER
	:	37 CFR 1.102(d)

This is a decision on the request to participate in the Patent Prosecution Highway (PPH) program and the petition under 37 CFR 1.102(d), filed December 30, 2010 to make the above-identified application special.

The request and petition are **GRANTED**.

A grantable request to participate in the PPH program and petition to make special require:

(1) The U.S. application must validly claim priority under 35 U.S.C. 119(a) to one or more applications filed in the JPO;
(2) Applicant must submit a copy of the allowable/patentable claim(s) from the JPO application(s) along with an English translation thereof and a statement that the English translation is accurate;
(3) All the claims in the U.S. application must sufficiently correspond or be amended to sufficiently correspond to the allowable/patentable claim(s) in the JPO application(s);
(4) Examination of the U.S. application has not begun;
(5) Applicant must submit a copy of all the office actions from each of the JPO application(s) containing the allowable/patentable claim(s) along with an English translation thereof and a statement that the English translation is accurate;
(6) Applicant must submit an IDS listing the documents cited by the JPO examiner in the JPO office action along with copies of documents except U.S. patents or U.S. patent application publications; and

The request to participate in the PPH program and petition comply with the above requirements. Accordingly, the above-identified application has been accorded "special" status.

The PPH petition fee has been eliminated for PPH requests filed on or after May 25, 2010 and the petition fee paid is being refunded.

Telephone inquiries concerning this decision should be directed to Mehrdad Dastouri at 571-272-7418.

All other inquiries concerning the examination or status of the application should be directed to Patent Application Information Retrieval (PAIR) system.

The application is being forwarded to the examiner for action on the merits commensurate with this decision.

/Mehrdad Dastouri/

Mehrdad Dastouri
Quality Assurance Specialist
Technology Center 2400

UNITED STATES PATENT AND TRADEMARK OFFICE

UNITED STATES DEPARTMENT OF COMMERCE
United States Patent and Trademark Office
Address: COMMISSIONER FOR PATENTS
P.O. Box 1450
Alexandria, Virginia 22313-1450
www.uspto.gov

APPLICATION NO.	FILING DATE	FIRST NAMED INVENTOR	ATTORNEY DOCKET NO.	CONFIRMATION NO.
12/544,269	08/20/2009	Ross Michael Kilby	FORR-019289-US-ORD	9012

26294 7590 07/05/2011
TAROLLI, SUNDHEIM, COVELL & TUMMINO L.L.P.
1300 EAST NINTH STREET, SUITE 1700
CLEVELAND, OH 44114

EXAMINER
ISMAIL, SHAWKI SAIF

ART UNIT	PAPER NUMBER
2819	

MAIL DATE	DELIVERY MODE
07/05/2011	PAPER

Please find below and/or attached an Office communication concerning this application or proceeding.

The time period for reply, if any, is set in the attached communication.

UNITED STATES PATENT AND TRADEMARK OFFICE

Commissioner for Patents
United States Patent and Trademark Office
P.O. Box 1450
Alexandria, VA 22313-1450
www.uspto.gov

TAROLLI, SUNDHEIM, COVELL & TUMMINO L.L.P.
1300 EAST NINTH STREET, SUITE 1700
CLEVELAND OH 44114

In re Application of	**: DECISION ON REQUEST TO**
Ross KILBY	**: PARTICIPATE IN THE PATENT**
Application No.: 12/544,269	**: PROSECUTION HIGHWAY**
Filed: 20 August 2009	**: PROGRAM AND PETITION**
Attorney Docket No.: FORR-019289-US-ORD	**: TO MAKE SPECIAL UNDER**
For: LIGHTING SYSTEM	**: 37 CFR 1.102(a)**

This is a decision on the request to participate in the Patent Prosecution Highway (PPH) program filed 17 June 2011.

The request and petition are **GRANTED**.

A grantable request to participate in the PPH program and petition to make special require:

(1) The U.S. application must validly claim priority under 35 U.S.C. 119(a) to one or more applications filed in the UK IPO, note where the UK IPO application with similar claims is not the same application from which the U.S. application claims priority that the applicant must identify the relationship between the UK IPO application with similar claims and the UK IPO priority application;

(2) Applicant must submit a copy of:
The allowable/patentable claim(s) from the UK IPO application(s);

(3) Applicant must:
a. Ensure all the claims in the U.S. application must sufficiently correspond or be amended to sufficiently correspond to the allowable/patentable claim(s) in the UK IPO application(s); and
b. Submit a claims correspondence table;

(4) Examination of the U.S. application has not begun;

(5) The required petition fee under 37 CFR 1.17(h).

(6) Applicant must submit:
A copy of all of the office actions from each of the UK IPO application(s) containing the allowable/patentable claims that are the basis for the request or request that the USPTO obtain a copy from the UK IPO. If the USPTO is not able to obtain a copy of all of the office actions from the UK IPO, the applicant will be notified and requested to provide the necessary documents.

(7) Applicant must submit:

a. An IDS listing the documents cited by the UK IPO examiner in the UK IPO office action (unless already submitted in this application); and
b. Copies of documents except U.S. patents or U.S. patent application publications (unless already submitted in this application)

The request to participate in the PPH program and petition comply with the above requirements. Accordingly, the above-identified application has been accorded "special" status.

This application will be forwarded to the examiner for action on the merits commensurate with this decision once the formalities review has been completed.

Any inquiry regarding this decision should be directed to Lee W. Young, Quality Assurance Specialist, at (571) 272-4549.

All other inquiries concerning the examination or status of the application is accessible in the PAIR system at http://www.uspto.gov/ebc/index.html.

Lee W. Young
TQAS
Technology Center 2800 – Semiconductors
Electrical & Optical Systems & Components

PTO/SB/20PCT-EP (05-10)
Approved for use through 01/31/2012. OMB 0651-0058
U.S. Patent and Trademark Office; U. S. DEPARTMENT OF COMMERCE
Under the Paperwork Reduction Act of 1995, no persons are required to respond to a collection of information unless it displays a valid OMB control number.

REQUEST FOR PARTICIPATION IN THE PATENT COOPERATION TREATY - PATENT PROSECUTION HIGHWAY (PCT-PPH) PILOT PROGRAM BETWEEN THE EUROPEAN PATENT OFFICE (EPO) AND THE USPTO

Application No:	12/544,346	Filing date:	August 20, 2009
First Named Inventor:	James Jay Benner		
Title of the Invention:	Speed Change Kit for an Absorbent Article Converting Line		

THIS REQUEST FOR PARTICIPATION IN THE PCT-PPH PILOT PROGRAM ALONG WITH THE REQUIRED DOCUMENTS MUST BE SUBMITTED VIA EFS-WEB. INFORMATION REGARDING EFS-WEB IS AVAILABLE AT HTTP://WWW.USPTO.GOV/EBC/EFS_HELP.HTML

APPLICANT HEREBY REQUESTS PARTICIPATION IN THE PCT-PPH PROGRAM AND PETITIONS TO MAKE THE ABOVE-IDENTIFIED APPLICATION SPECIAL UNDER THE PCT-PPH PROGRAM.

The above-identified application is (1) a national stage entry of the corresponding PCT application, or (2) a national stage entry of another PCT application which claims priority to the corresponding PCT application, or (3) a national application that claims domestic/ foreign priority to the corresponding PCT application, or (4) a national application which forms the basis for the priority claim in the corresponding PCT application, or (5) a continuing application of a U.S. application that satisfies one of (1) to (4) above, or (6) a U.S. application that claims domestic benefit to a U.S. provisional application which forms the basis for the priority claim in the corresponding PCT application.

The corresponding PCT application number(s) is/are: PCT/US2010/043498

The international filing date of the corresponding PCT application(s) is/are: July 28, 2010

I. List of Required Documents:

a. **A copy of the latest international work product (WO/ISA, WO/IPEA, or IPER) in the above–identified corresponding PCT application(s)**

- [x] Is attached
- [ ] Is not attached because the document is already in the U.S. application.

b. **A copy of all claims which were indicated as having novelty, inventive step and industrial applicability in the above-identified corresponding PCT application(s).**

- [x] Is attached.
- [ ] Is not attached because the document is already in the U.S. application.

c. **English translations of the documents in a. and b. above are attached (if the documents are not in the English language). A statement that the English translation is accurate is attached for the document in b. above.**

This collection of information is required by 35 U.S.C. 119, 37 CFR 1.55, and 37 CFR 1.102(d). The information is required to obtain or retain a benefit by the public, which is to file (and by the USPTO to process) an application. Confidentiality is governed by 35 U.S.C. 122 and 37 CFR 1.11 and 1.14. This collection is estimated to take 2 hours to complete, including gathering, preparing, and submitting the completed application form to the USPTO. Time will vary depending upon the individual case. Any comments on the amount of time you require to complete this form and/or suggestions for reducing this burden should be sent to the Chief Information Officer, U.S. Patent and Trademark Office, U.S. Department of Commerce, P.O. Box 1450, Alexandria, VA 22313-1450. DO NOT SEND FEES OR COMPLETED FORMS TO THIS ADDRESS.

Approved for use through 01/31/2012. OMB 0651-0058
U.S.Patent and Trademark Office; U.S. DEPARTMENT OF COMMERCE

Under the Paperwork Reduction Act of 1995, no persons are required to respond to a collection of information unless it displays a valid OMB control number.

REQUEST FOR PARTICIPATION IN THE PCT-PPH PILOT PROGRAM BETWEEN THE EPO AND THE USPTO

(continued)

Application No.:	12/544,346
First Named Inventor:	James Jay Benner

d. **(1) An information disclosure statement listing the documents cited in the international work products (ISR, WO/ISA, WO/IPEA, IPER) of the corresponding PCT application.**

☐ Is attached

☒ Has already been filed in the above-identified U.S. application on January 19, 2011

(2) Copies of all documents (except) for U.S. patents or U.S. patent application publications)

☐ Are attached.

☒ Have already been filed in the above-identified U.S. application on January 19, 2011

II. Claims Correspondence Table:

Claims in US Application	Patentable Claims in the corresponding PCT Application	Explanation regarding the correspondence
1-9	1-9	Please see attached Claims Correspondence Table.
10-18	Not Applicable	Claims 10-18 are canceled by the Preliminary Amendment submitted herewith.

III. All the claims in the US application sufficiently correspond to the patentable claims in the corresponding PCT application.

Signature /Amy M. Foust/	Date May 18, 2011
Name (Print/Typed) Amy M. Foust	Registration Number 57,782

Privacy Act Statement

The **Privacy Act of 1974 (P.L. 93-579)** requires that you be given certain information in connection with your submission of the attached form related to a patent application or patent. Accordingly, pursuant to the requirements of the Act, please be advised that: (1) the general authority for the collection of this information is 35 U.S.C. 2(b)(2); (2) furnishing of the information solicited is voluntary; and (3) the principal purpose for which the information is used by the U.S. Patent and Trademark Office is to process and/or examine your submission related to a patent application or patent. If you do not furnish the requested information, the U.S. Patent and Trademark Office may not be able to process and/or examine your submission, which may result in termination of proceedings or abandonment of the application or expiration of the patent.

The information provided by you in this form will be subject to the following routine uses:

1. The information on this form will be treated confidentially to the extent allowed under the Freedom of Information Act (5 U.S.C. 552) and the Privacy Act (5 U.S.C 552a). Records from this system of records may be disclosed to the Department of Justice to determine whether disclosure of these records is required by the Freedom of Information Act.
2. A record from this system of records may be disclosed, as a routine use, in the course of presenting evidence to a court, magistrate, or administrative tribunal, including disclosures to opposing counsel in the course of settlement negotiations.
3. A record in this system of records may be disclosed, as a routine use, to a Member of Congress submitting a request involving an individual, to whom the record pertains, when the individual has requested assistance from the Member with respect to the subject matter of the record.
4. A record in this system of records may be disclosed, as a routine use, to a contractor of the Agency having need for the information in order to perform a contract. Recipients of information shall be required to comply with the requirements of the Privacy Act of 1974, as amended, pursuant to 5 U.S.C. 552a(m).
5. A record related to an International Application filed under the Patent Cooperation Treaty in this system of records may be disclosed, as a routine use, to the International Bureau of the World Intellectual Property Organization, pursuant to the Patent Cooperation Treaty.
6. A record in this system of records may be disclosed, as a routine use, to another federal agency for purposes of National Security review (35 U.S.C. 181) and for review pursuant to the Atomic Energy Act (42 U.S.C. 218(c)).
7. A record from this system of records may be disclosed, as a routine use, to the Administrator, General Services, or his/her designee, during an inspection of records conducted by GSA as part of that agency's responsibility to recommend improvements in records management practices and programs, under authority of 44 U.S.C. 2904 and 2906. Such disclosure shall be made in accordance with the GSA regulations governing inspection of records for this purpose, and any other relevant (*i.e.*, GSA or Commerce) directive. Such disclosure shall not be used to make determinations about individuals.
8. A record from this system of records may be disclosed, as a routine use, to the public after either publication of the application pursuant to 35 U.S.C. 122(b) or issuance of a patent pursuant to 35 U.S.C. 151. Further, a record may be disclosed, subject to the limitations of 37 CFR 1.14, as a routine use, to the public if the record was filed in an application which became abandoned or in which the proceedings were terminated and which application is referenced by either a published application, an application open to public inspection or an issued patent.
9. A record from this system of records may be disclosed, as a routine use, to a Federal, State, or local law enforcement agency, if the USPTO becomes aware of a violation or potential violation of law or regulation.

PATENT COOPERATION TREATY

From the INTERNATIONAL SEARCHING AUTHORITY

To:
Hughett, Eileen L.
THE PROCTER & GAMBLE COMPANY
Global Patent Services
299 E. Sixth Street, Sycamore Bldg., 4th Floor
Cincinnati OH 45202
ETATS-UNIS D'AMERIQUE

PCT

NOTIFICATION OF TRANSMITTAL OF THE INTERNATIONAL SEARCH REPORT AND THE WRITTEN OPINION OF THE INTERNATIONAL SEARCHING AUTHORITY, OR THE DECLARATION

(PCT Rule 44.1)

Applicant's or agent's file reference 11398-CB	Date of mailing *(day/month/year)* 22 November 2010 (22-11-2010)
	FOR FURTHER ACTION See paragraphs 1 and 4 below
International application No. PCT/US2010/043498	International filing date *(day/month/year)* 28 July 2010 (28-07-2010)
Applicant THE PROCTER & GAMBLE COMPANY	

1. [X] The applicant is hereby notified that the international search report and the written opinion of the International Searching Authority have been established and are transmitted herewith.

   Filing of amendments and statement under Article 19:
   The applicant is entitled, if he so wishes, to amend the claims of the International Application (see Rule 46):

   When? The time limit for filing such amendments is normally two months from the date of transmittal of the International Search Report.

   Where? Directly to the International Bureau of WIPO, 34 chemin des Colombettes 1211 Geneva 20, Switzerland, Fascimile No.: (41-22) 338.82.70

   For more detailed instructions, see the notes on the accompanying sheet.

2. [ ] The applicant is hereby notified that no international search report will be established and that the declaration under Article 17(2)(a) to that effect and the written opinion of the International Searching Authority are transmitted herewith.

3. [ ] **With regard to any protest** against payment of (an) additional fee(s) under Rule 40.2, the applicant is notified that:

   [ ] the protest together with the decision thereon has been transmitted to the International Bureau together with the applicant's request to forward the texts of both the protest and the decision thereon to the designated Offices.

   [ ] no decision has been made yet on the protest; the applicant will be notified as soon as a decision is made.

4. **Reminders**

   Shortly after the expiration of **18 months** from the priority date, the international application will be published by the International Bureau. If the applicant wishes to avoid or postpone publication, a notice of withdrawal of the international application, or of the priority claim, must reach the International Bureau as provided in Rules 90*bis*.1 and 90*bis*.3, respectively, before the completion of the technical preparations for international publication.

   The applicant may submit comments on an informal basis on the written opinion of the International Searching Authority to the International Bureau. The International Bureau will send a copy of such comments to all designated Offices unless an international preliminary examination report has been or is to be established. These comments would also be made available to the public but not before the expiration of 30 months from the priority date.

   Within **19 months** from the priority date, but only in respect of some designated Offices, a demand for international preliminary examination must be filed if the applicant wishes to postpone the entry into the national phase **until 30 months** from the priority date (in some Offices even later); otherwise, the applicant must, **within 20 months** from the priority date, perform the prescribed acts for entry into the national phase before those designated Offices.

   In respect of other designated Offices, the time limit of **30 months** (or later) will apply even if no demand is filed within 19 months.

   See the Annex to Form PCT/IB/301 and, for details about the applicable time limits, Office by Office, see the *PCT Applicant's Guide*, National Chapters

Name and mailing address of the International Searching Authority European Patent Office, P.B. 5818 Patentlaan 2 NL-2280 HV Rijswijk Tel. (+31-70) 340-2040 Fax: (+31-70) 340-3016	Authorized officer KJELLSTRÖM, Maja Tel: +49 (0)89 2399-8092

NOTES TO FORM PCT/ISA/220

These Notes are intended to give the basic instructions concerning the filing of amendments under article 19. The Notes are based on the requirements of the Patent Cooperation Treaty, the Regulations and the Administrative Instructions under that Treaty. In case of discrepancy between these Notes and those requirements, the latter are applicable. For more detailed information, see also the *PCT Applicant's Guide*.

In these Notes, "Article", "Rule", and "Section" refer to the provisions of the PCT, the PCT Regulations and the PCT Administrative Instructions, respectively.

INSTRUCTIONS CONCERNING AMENDMENTS UNDER ARTICLE 19

The applicant has, after having received the international search report and the written opinion of the International Searching Authority, one opportunity to amend the claims of the international application. It should however be emphasized that, since all parts of the international application (claims,description and drawings) may be amended during the international preliminary examination procedure, there is usually no need to file amendments of the claims under Article 19 except where, e.g. the applicant wants the latter to be published for the purposes of provisional protection or has another reason for amending the claims before international publication. Furthermore, it should be emphasized that provisional protection is available in some States only (see *PCT Applicant's Guide*, Annex B).

The attention of the applicant is drawn to the fact that amendments to the claims under Article 19 are not allowed where the International Searching Authority has declared, under Article 17(2), that no international search report would be established (see *PCT Applicant's Guide*, International Phase, paragraph 296).

What parts of the international application may be amended?

Under Article 19, only the claims may be amended.

During the international phase, the claims may also be amended (or further amended) under Article 34 before the International Preliminary Examining Authority. The description and drawings may only be amended under Article 34 before the International Examining Authority.

Upon entry into the national phase, all parts of the international application may be amended under Article 28 or, where applicable, Article 41.

When?

Within 2 months from the date of transmittal of the international search report or 16 months from the priority date, whichever time limit expires later. It should be noted, however, that the amendments will be considered as having been received on time if they are received by the International Bureau after the expiration of the applicable time limit but before the completion of the technical preparations for international publication (Rule 46.1).

Where not to file the amendments?

The amendments may only be filed with the International Bureau and not with the receiving Office or the International Searching Authority (Rule 46.2).

Where a demand for international preliminary examination has been/is filed, see below.

How?

Either by cancelling one or more entire claims, by adding one or more new claims or by amending the text of one or more of the claims as filed.

A replacement sheet or sheets containing a complete set of claims in replacement of all the claims previously filed must be submitted.

Where a claim is cancelled, no renumbering of the other claims is required. In all cases where claims are renumbered, they must be renumbered consecutively in Arabic numerals (Section 205(a)).

The amendments must be made in the language in which the international application is to be published.

What documents must/may accompany the amendments?

Letter (Section 205(b)):

The amendments must be submitted with a letter.

The letter will not be published with the international application and the amended claims. It should not be confused with the "Statement under Article 19(1)" (see below, under "Statement under Article 19(1)").

The letter must be in English or French, at the choice of the applicant. However, if the language of the international application is English, the letter must be in English; if the language of the international application is French, the letter must be in French.

NOTES TO FORM PCT/ISA/220 (continued)

The letter must indicate the differences between the claims as filed and the claims as amended. It must, in particular, indicate, in connection with each claim appearing in the international application (it being understood that identical indications concerning several claims may be grouped),whether

(i) the claim is unchanged;

(ii) the claim is cancelled;

(iii) the claim is new;

(iv) the claim replaces one or more claims as filed;

(v) the claim is the result of the division of a claim as filed.

The following examples illustrate the manner in which amendments must be explained in the accompanying letter:

1. [Where originally there were 48 claims and after amendment of some claims there are 51]:
"Claims 1 to 29, 31, 32, 34, 35, 37 to 48 replaced by amended claims bearing the same numbers; claims 30, 33 and 36 unchanged; new claims 49 to 51 added."

2. [Where originally there were 15 claims and after amendment of all claims there are 11]:
"Claims 1 to 15 replaced by amended claims 1 to 11."

3. [Where originally there were 14 claims and the amendments consist in cancelling some claims and in adding new claims]:
"Claims 1 to 6 and 14 unchanged; claims 7 to 13 cancelled; new claims 15, 16 and 17 added." or
"Claims 7 to 13 cancelled; new claims 15, 16 and 17 added; all other claims unchanged."

4. [Where various kinds of amendments are made]:
"Claims 1-10 unchanged; claims 11 to 13, 18 and 19 cancelled; claims 14, 15 and 16 replaced by amended claim 14; claim 17 subdivided into amended claims 15, 16 and 17; new claims 20 and 21 added."

"Statement under article 19(1)" (Rule 46.4)

The amendments may be accompanied by a statement explaining the amendments and indicating any impact that such amendments might have on the description and the drawings (which cannot be amended under Article 19(1)).

The statement will be published with the international application and the amended claims.

It must be in the language in which the international application is to be published.

It must be brief, not exceeding 500 words if in English or if translated into English.

It should not be confused with and does not replace the letter indicating the differences between the claims as filed and as amended. It must be filed on a separate sheet and must be identified as such by a heading, preferably by using the words "Statement under Article 19(1)."

It may not contain any disparaging comments on the international search report or the relevance of citations contained in that report. Reference to citations, relevant to a given claim, contained in the international search report may be made only in connection with an amendment of that claim.

Consequence if a demand for international preliminary examination has already been filed

If, at the time of filing any amendments and any accompanying statement, under Article 19, a demand for international preliminary examination has already been submitted, the applicant must preferably, at the time of filing the amendments (and any statement) with the International Bureau, also file with the International Preliminary Examining Authority a copy of such amendments (and of any statement) and, where required, a translation of such amendments for the procedure before that Authority (see Rules 55.3(a) and 62.2, first sentence). For further information, see the Notes to the demand form (PCT/IPEA/401).

If a demand for international preliminary examination is made, the written opinion of the International Searching Authority will, except in certain cases where the International Preliminary Examining Authority did not act as International Searching Authority and where it has notified the International Bureau under Rule 66.1*bis*(b), be considered to be a written opinion of the International Preliminary Examining Authority. If a demand is made, the applicant may submit to the International Preliminary Examining Authority a reply to the written opinion together, where appropriate, with amendments before the expiration of 3 months from the date of mailing of Form PCT/ISA/220 or before the expiration of 22 months from the priority date, whichever expires later (Rule 43*bis*.1(c)).

Consequence with regard to translation of the international application for entry into the national phase

The applicant's attention is drawn to the fact that, upon entry into the national phase, a translation of the claims as amended under Article 19 may have to be furnished to the designated/elected Offices, instead of, or in addition to, the translation of the claims as filed.

For further details on the requirements of each designated/elected Office, see the *PCT Applicant's Guide*, National Chapters.

PATENT COOPERATION TREATY

PCT

INTERNATIONAL SEARCH REPORT

(PCT Article 18 and Rules 43 and 44)

Applicant's or agent's file reference 11398-CB	**FOR FURTHER ACTION** see Form PCT/ISA/220 as well as, where applicable, item 5 below.	
International application No. PCT/US2010/043498	International filing date *(day/month/year)* 28/07/2010	(Earliest) Priority Date *(day/month/year)* 20/08/2009
Applicant THE PROCTER & GAMBLE COMPANY		

This international search report has been prepared by this International Searching Authority and is transmitted to the applicant according to Article 18. A copy is being transmitted to the International Bureau.

This international search report consists of a total of 3 sheets.

[X] It is also accompanied by a copy of each prior art document cited in this report.

1. **Basis of the report**
   a. With regard to the **language**, the international search was carried out on the basis of:
      [X] the international application in the language in which it was filed
      [ ] a translation of the international application into _____, which is the language of a translation furnished for the purposes of international search (Rules 12.3(a) and 23.1(b))
   b. [ ] This international search report has been established taking into account the **rectification of an obvious mistake** authorized by or notified to this Authority under Rule 91 (Rule 43.6*bis*(a)).
   c. [ ] With regard to any **nucleotide and/or amino acid sequence** disclosed in the international application, see Box No. I.

2. [ ] **Certain claims were found unsearchable** (See Box No. II)

3. [ ] **Unity of invention is lacking** (see Box No III)

4. With regard to the **title**,
   [X] the text is approved as submitted by the applicant
   [ ] the text has been established by this Authority to read as follows:

5. With regard to the **abstract**,
   [X] the text is approved as submitted by the applicant
   [ ] the text has been established, according to Rule 38.2(b), by this Authority as it appears in Box No. IV. The applicant may, within one month from the date of mailing of this international search report, submit comments to this Authority

6. With regard to the **drawings**,
   a. the figure of the **drawings** to be published with the abstract is Figure No. 1
      [X] as suggested by the applicant
      [ ] as selected by this Authority, because the applicant failed to suggest a figure
      [ ] as selected by this Authority, because this figure better characterizes the invention
   b. [ ] none of the figures is to be published with the abstract

INTERNATIONAL SEARCH REPORT

International application No
PCT/US2010/043498

A. CLASSIFICATION OF SUBJECT MATTER
INV. A61F13/15
ADD.

According to International Patent Classification (IPC) or to both national classification and IPC

B. FIELDS SEARCHED

Minimum documentation searched (classification system followed by classification symbols)
A61F

Documentation searched other than minimum documentation to the extent that such documents are included in the fields searched

Electronic data base consulted during the international search (name of data base and, where practical, search terms used)
EPO-Internal

C. DOCUMENTS CONSIDERED TO BE RELEVANT

Category*	Citation of document, with indication, where appropriate, of the relevant passages	Relevant to claim No.
A	US 6 074 333 A (RAJALA GREGORY JOHN [US] ET AL) 13 June 2000 (2000-06-13) claims 1-22	1-9
A	WO 00/38608 A1 (KIMBERLY CLARK CO [US]) 6 July 2000 (2000-07-06) * abstract; claims 37-55	1-9
A	WO 2005/005296 A1 (ZUIKO CORP [JP]; NAKAKADO MASAKI [JP]) 20 January 2005 (2005-01-20) * abstract	1-9

☐ Further documents are listed in the continuation of Box C. ☒ See patent family annex.

* Special categories of cited documents :

"A" document defining the general state of the art which is not considered to be of particular relevance
"E" earlier document but published on or after the international filing date
"L" document which may throw doubts on priority claim(s) or which is cited to establish the publication date of another citation or other special reason (as specified)
"O" document referring to an oral disclosure, use, exhibition or other means
"P" document published prior to the international filing date but later than the priority date claimed

"T" later document published after the international filing date or priority date and not in conflict with the application but cited to understand the principle or theory underlying the invention
"X" document of particular relevance; the claimed invention cannot be considered novel or cannot be considered to involve an inventive step when the document is taken alone
"Y" document of particular relevance; the claimed invention cannot be considered to involve an inventive step when the document is combined with one or more other such documents, such combination being obvious to a person skilled in the art.
"&" document member of the same patent family

Date of the actual completion of the international search	Date of mailing of the international search report
10 November 2010	22/11/2010
Name and mailing address of the ISA/ European Patent Office, P.B. 5818 Patentlaan 2 NL - 2280 HV Rijswijk Tel. (+31-70) 340-2040, Fax: (+31-70) 340-3016	Authorized officer Gennari, Silvia

INTERNATIONAL SEARCH REPORT

Information on patent family members

International application No
PCT/US2010/043498

Patent document cited in search report		Publication date	Patent family member(s)			Publication date
US 6074333	A	13-06-2000	AU	2208400	A	31-07-2000
			WO	0038605	A1	06-07-2000
WO 0038608	A1	06-07-2000	AU	2386900	A	31-07-2000
			CO	5210959	A1	30-10-2002
			US	6149755	A	21-11-2000
WO 2005005296	A1	20-01-2005	NONE			

PATENT COOPERATION TREATY

From the
INTERNATIONAL SEARCHING AUTHORITY

To:

see form PCT/ISA/220

PCT

WRITTEN OPINION OF THE INTERNATIONAL SEARCHING AUTHORITY

(PCT Rule 43*bis*.1)

Date of mailing
(day/month/year) see form PCT/ISA/210 (second sheet)

Applicant's or agent's file reference
see form PCT/ISA/220

FOR FURTHER ACTION
See paragraph 2 below

International application No.	International filing date *(day/month/year)*	Priority date *(day/month/year)*
PCT/US2010/043498	28.07.2010	20.08.2009

International Patent Classification (IPC) or both national classification and IPC
INV. A61F13/15

Applicant
THE PROCTER & GAMBLE COMPANY

1. This opinion contains indications relating to the following items:

- ☒ Box No. I Basis of the opinion
- ☐ Box No. II Priority
- ☐ Box No. III Non-establishment of opinion with regard to novelty, inventive step and industrial applicability
- ☐ Box No. IV Lack of unity of invention
- ☒ Box No. V Reasoned statement under Rule 43*bis*.1(a)(i) with regard to novelty, inventive step and industrial applicability; citations and explanations supporting such statement
- ☐ Box No. VI Certain documents cited
- ☐ Box No. VII Certain defects in the international application
- ☒ Box No. VIII Certain observations on the international application

2. **FURTHER ACTION**

If a demand for international preliminary examination is made, this opinion will usually be considered to be a written opinion of the International Preliminary Examining Authority ("IPEA") except that this does not apply where the applicant chooses an Authority other than this one to be the IPEA and the chosen IPEA has notifed the International Bureau under Rule 66.1*bis*(b) that written opinions of this International Searching Authority will not be so considered.

If this opinion is, as provided above, considered to be a written opinion of the IPEA, the applicant is invited to submit to the IPEA a written reply together, where appropriate, with amendments, before the expiration of 3 months from the date of mailing of Form PCT/ISA/220 or before the expiration of 22 months from the priority date, whichever expires later.

For further options, see Form PCT/ISA/220.

3. For further details, see notes to Form PCT/ISA/220.

Name and mailing address of the ISA:

European Patent Office

D-80298 Munich
Tel. +49 89 2399 - 0
Fax: +49 89 2399 - 4465

Date of completion of this opinion

see form PCT/ISA/210

Authorized Officer

Gennari, Silvia

Telephone No. +49 89 2399-7167

WRITTEN OPINION OF THE INTERNATIONAL SEARCHING AUTHORITY

International application No.
PCT/US2010/043498

Box No. I Basis of the opinion

1. With regard to the **language**, this opinion has been established on the basis of:

   ☒ the international application in the language in which it was filed

   ☐ a translation of the international application into , which is the language of a translation furnished for the purposes of international search (Rules 12.3(a) and 23.1 (b)).

2. ☐ This opinion has been established taking into account the **rectification of an obvious mistake** authorized by or notified to this Authority under Rule 91 (Rule 43bis.1(a))

3. With regard to any **nucleotide and/or amino acid sequence** disclosed in the international application, this opinion has been established on the basis of a sequence listing filed or furnished:

   a. (means)

   ☐ on paper

   ☐ in electronic form

   b. (time)

   ☐ in the international application as filed

   ☐ together with the international application in electronic form

   ☐ subsequently to this Authority for the purposes of search

4. ☐ In addition, in the case that more than one version or copy of a sequence listing has been filed or furnished, the required statements that the information in the subsequent or additional copies is identical to that in the application as filed or does not go beyond the application as filed, as appropriate, were furnished.

5. Additional comments:

Box No. V Reasoned statement under Rule 43*bis*.1(a)(i) with regard to novelty, inventive step or industrial applicability; citations and explanations supporting such statement

1. Statement

Novelty (N)	Yes:	Claims	1-9
	No:	Claims	
Inventive step (IS)	Yes:	Claims	1-9
	No:	Claims	
Industrial applicability (IA)	Yes:	Claims	1-9
	No:	Claims	

2. Citations and explanations

   see separate sheet

Box No. VIII Certain observations on the international application

The following observations on the clarity of the claims, description, and drawings or on the question whether the claims are fully supported by the description, are made:

see separate sheet

Re. Item VIII

Objection concerning clarity

It is opinion of the Examiner that independent claim 1 does not fulfill the requirements of clarity of Article 6 PCT. As a matter of fact, the claimed "speed kit" (being the core of the invention) should have been more clearly defined in terms of clear technical features. As it stands, it is clear from the claim and from the description that a system where low and high production speeds can be integrated wants to be achieved. However, it is not at all clear **how to technically** practically achieve this objective. E.g., how are the two different velocity ranges claimed obtained and controlled (through which electronic and mechanical components?)? It is at present opinion of the Examiner that some features, which are essential for the definition of the invention, are missing from the independent claim. As a result, its formulation appears vague and unclear and the skilled person is not able to reproduce the invention without ambiguity and by arriving at the same result as the present application.

Re Item V

Reasoned statement with regard to novelty, inventive step or industrial applicability; citations and explanations supporting such statement

Reference is made to the following documents:

D1	US 6 074 333 A (RAJALA GREGORY JOHN [US] ET AL) 13 June 2000 (2000-06-13)
D2	WO 00/38608 A1 (KIMBERLY CLARK CO [US]) 6 July 2000 (2000-07-06)
D3	WO 2005/005296 A1 (ZUIKO CORP [JP]; NAKAKADO MASAKI [JP]) 20 January 2005 (2005-01-20)

D1 is regarded as being the prior art closest to the subject-matter of claim 1, and discloses (claims 1-22): a process for making (particularly focused on the "cutting" step) absorbent articles comprising registering webs moving at different speeds.

The subject-matter of claim 1 therefore differs from this known D1 in that D1 refers to different steps of a same production process having different speeds, while claim 1 claims that the speed of the production itself must changed by the control system, not only the speed of one step. The subject-matter of independent claim 1 is therefore new (Article 33(2) PCT).

The problem to be solved by the present invention may be regarded as providing a system comprising converting lines for both low speeds (hence low costs) and high speeds (hence high efficiency), so that the producer can choose between low costs and high efficiency depending on the needs.

The solution to this problem proposed in claim 1 of the present application is considered as involving an inventive step (Article 33(3) PCT) for the following reasons: none of the prior art documents cited in the search report discloses such method to integrate low and high production speeds. All documents cited refer to methods comprising steps with different speeds, each method being suitable either to overall low production speeds or to overall high production speeds.

Claims 2 to 9 are dependent on claim 1 and as such also meet the requirements of the PCT with respect to novelty and inventive step.

Possible steps after receipt of the international search report (ISR) and written opinion of the International Searching Authority (WO-ISA)

General information	For all international applications filed on or after 01/01/2004 the competent ISA will establish an ISR. It is accompanied by the WO-ISA. Unlike the former written opinion of the IPEA (Rule 66.2 PCT), the WO-ISA is not meant to be responded to, but to be taken into consideration for further procedural steps. This document explains about the possibilities.
Amending claims under Art. 19 PCT	Within 2 months after the date of mailing of the ISR and the WO-ISA the applicant may file amended claims under Art. 19 PCT directly with the International Bureau of WIPO. The PCT reform of 2004 did not change this procedure. For further information please see Rule 46 PCT as well as form PCT/ISA/220 and the corresponding Notes to form PCT/ISA/220.
Filing a demand for international preliminary examination	In principle, the WO-ISA will be considered as the written opinion of the IPEA. This should, in many cases, make it unnecessary to file a demand for international preliminary examination. If the applicant nevertheless wishes to file a demand this must be done before expiry of 3 months after the date of mailing of the ISR/WO-ISA or 22 months after priority date, whichever expires later (Rule 54bis PCT). Amendments under Art. 34 PCT can be filed with the IPEA as before, normally at the same time as filing the demand (Rule 66.1 (b) PCT). If a demand for international preliminary examination is filed and no comments/amendments have been received the WO-ISA will be transformed by the IPEA into an IPRP (International Preliminary Report on Patentability) which would merely reflect the content of the WO-ISA. The demand can still be withdrawn (Art. 37 PCT).
Filing informal comments	After receipt of the ISR/WO-ISA the applicant may file informal comments on the WO-ISA directly with the International Bureau of WIPO. These will be communicated to the designated Offices together with the IPRP (International Preliminary Report on Patentability) at 30 months from the priority date. Please also refer to the next box.
End of the international phase	At the end of the international phase the International Bureau of WIPO will transform the WO-ISA or, if a demand was filed, the written opinion of the IPEA into the IPRP, which will then be transmitted together with possible informal comments to the designated Offices. The IPRP replaces the former IPER (international preliminary examination report).
Relevant PCT Rules and more information	Rule 43 PCT, Rule 43bis PCT, Rule 44 PCT, Rule 44bis PCT, PCT Newsletter 12/2003, OJ 11/2003, OJ 12/2003

What is claimed is:

1. A system for fabricating disposable absorbent articles comprising:

a plurality of converting modules (101), each converting module defining an interior space ;

a plurality of absorbent article converting mechanisms (102), each converting mechanism arrange in the interior space of each converting module (101); and

a speed kit (800, 800a, 800b);

wherein the plurality of absorbent article converting mechanisms (102) can be configured from a first configuration to a second configuration by modifying the plurality of absorbent article converting mechanisms (102) to include the speed kit (800, 800a, 800b);

wherein in the first configuration, the plurality of absorbent article converting mechanisms (102) operate to produce absorbent articles at a first speed range; and

wherein in the second configuration, the plurality of absorbent article converting mechanisms (102) operate to produce absorbent articles at a second speed range different from the first speed range.

2. The system of claim 1, wherein:

the first speed range is defined by a first minimum speed and a first maximum speed greater than the first minimum speed;

the second speed range is defined by a second minimum speed and a second maximum speed greater than the second minimum speed.

3. The system of claim 2, wherein the second minimum speed is greater than the first maximum speed.

4. The system of claim 2, wherein the second minimum speed is greater than the first minimum speed and less than the first maximum speed.

5. The system of claim 4, wherein the second maximum speed is greater than the first maximum speed.

6. The system according to any of the preceding claims, further comprising at least one material delivery system (802) selected from the group consisting of: a hot melt glue system, an AGM feed system, and a web delivery system.

7. The system according to any of the preceding claims, further comprising at least one web handling system (808) selected from the group consisting of: a vacuum conveyor, a web idler, a web guider, and a scrap product conveyor.

8. The system according to any of the preceding claims, further comprising at least one process transformation apparatus (812) selected from the group consisting of: a folding device; a stretch activation unit; a cut and slip unit; a discrete component applicator; a cutting device; and a bonding unit.

9. The system according to any of the preceding claims, further comprising at least one utility system (818) selected from the group consisting of: a noise abatement enclosure; a vacuum fan; a vacuum pump; and a chilling unit.

Claims Correspondence Table
Comparing the claims of U.S. Patent Application No. 12/544,346 to the claims of PCT/US2010/043498

Claim from 12/544,346 after entry of the Preliminary Amendment filed May 18, 2011	Claim from PCT/US2010/043498	Comments
1. A system for fabricating disposable absorbent articles comprising: a plurality of converting modules, each converting module defining an interior space; a plurality of absorbent article converting mechanisms, each converting mechanism arranged in the interior space of each converting module; and a speed kit; wherein the plurality of absorbent article converting mechanisms can be configured from a first configuration to a second configuration by modifying the plurality of absorbent article converting mechanisms to include the speed kit; wherein in the first configuration, the plurality of absorbent article converting mechanisms operate to produce absorbent articles at a first speed range; and wherein in the second configuration, the plurality of absorbent article converting mechanisms operate to produce absorbent articles at a second speed range different from the first speed range.	1. A system for fabricating disposable absorbent articles comprising: a plurality of converting modules (101), each converting module defining an interior space; a plurality of absorbent article converting mechanisms (102), each converting mechanism arrange [sic] in the interior space of each converting module (101); and a speed kit (800, 800a, 800b); wherein the plurality of absorbent article converting mechanisms (102) can be configured from a first configuration to a second configuration by modifying the plurality of absorbent article converting mechanisms (102) to include the speed kit (800, 800a, 800b); wherein in the first configuration, the plurality of absorbent article converting mechanisms (102) operate to produce absorbent articles at a first speed range; and wherein in the second configuration, the plurality of absorbent article converting mechanisms (102) operate to produce absorbent articles at a second speed range different from the first speed range.	Essentially the same.
2. The system of claim 1, wherein: the first speed range is defined by a first minimum speed and a first maximum speed greater than the first minimum speed; the second speed range is defined by a	2. The system of claim 1, wherein: the first speed range is defined by a first minimum speed and a first maximum speed greater than the first minimum speed; the second speed range is defined by a second	Same.

second minimum speed and a second maximum speed greater than the second minimum speed.	minimum speed and a second maximum speed greater than the second minimum speed.	
3. The system of claim 2, wherein the second minimum speed is greater than the first maximum speed.	3. The system of claim 2, wherein the second minimum speed is greater than the first maximum speed.	Same.
4. The system of claim 2, wherein the second minimum speed is greater than the first minimum speed and less than the first maximum speed.	4. The system of claim 2, wherein the second minimum speed is greater than the first minimum speed and less than the first maximum speed.	Same.
5. The system of claim 4, wherein the second maximum speed is greater than the first maximum speed.	5. The system of claim 4, wherein the second maximum speed is greater than the first maximum speed.	Same.
6. The system of claim 1, further comprising at least one material delivery system selected from the group consisting of: a hot melt glue system, an AGM feed system, and a web delivery system.	6. The system according to any of the preceding claims, further comprising at least one material delivery system (802) selected from the group consisting of: a hot melt glue system, an AGM feed system, and a web delivery system.	Essentially the same.
7. The system of claim 1, further comprising at least one web handling system selected from the group consisting of: a vacuum conveyor, a web idler, a web guider, and a scrap product conveyor.	7. The system according to any of the preceding claims, further comprising at least one web handling system (808) selected from the group consisting of: a vacuum conveyor, a web idler, a web guider, and a scrap product conveyor.	Essentially the same.
8. The system of claim 1, further comprising at least one process transformation apparatus selected from the group consisting of: a folding device; a stretch activation unit; a cut and slip unit; a discrete component applicator; a cutting device; and a bonding unit.	8. The system according to any of the preceding claims, further comprising at least one process transformation apparatus (812) selected from the group consisting of: a folding device; a stretch activation unit; a cut and slip unit; a discrete component applicator; a cutting device; and a bonding unit.	Essentially the same.
9. The system of claim 1, further comprising at least one utility system selected from the group consisting of: a noise abatement enclosure; a vacuum	9. The system according to any of the preceding claims, further comprising at least one utility system (818) selected from the group consisting of: a noise abatement	Essentially the same.

fan; a vacuum pump; and a chilling unit.	enclosure; a vacuum fan; a vacuum pump; and a chilling unit.	
Claims 10-18	Not applicable.	Claims 10-18 are canceled by the Preliminary Amendment filed May 18, 2011.

UNITED STATES PATENT AND TRADEMARK OFFICE

UNITED STATES DEPARTMENT OF COMMERCE
United States Patent and Trademark Office
Address: COMMISSIONER FOR PATENTS
P.O. Box 1450
Alexandria, Virginia 22313-1450
www.uspto.gov

APPLICATION NO.	FILING DATE	FIRST NAMED INVENTOR	ATTORNEY DOCKET NO.	CONFIRMATION NO.
12/544,346	08/20/2009	James Jay Benner	11398	9185

27752 7590 08/25/2011
THE PROCTER & GAMBLE COMPANY
Global Legal Department - IP
Sycamore Building - 4th Floor
299 East Sixth Street
CINCINNATI, OH 45202

EXAMINER
RIVERA, JOSHEL

ART UNIT	PAPER NUMBER
1746	

MAIL DATE	DELIVERY MODE
08/25/2011	PAPER

Please find below and/or attached an Office communication concerning this application or proceeding.

The time period for reply, if any, is set in the attached communication.

UNITED STATES PATENT AND TRADEMARK OFFICE

Commissioner for Patents
United States Patent and Trademark Office
P.O. Box 1450
Alexandria, VA 22313-1450
www.uspto.gov

BC

8/25/11

In re application of	:	DECISION ON REQUEST TO
James J. Benner et al.	:	PARTICIPATE IN PATENT
Serial No. 12/544,346	:	PROSECUTION HIGHWAY
Filed: August 20, 2009	:	PROGRAM AND
Attorney Docket No: 11398	:	PETITION TO MAKE SPECIAL
	:	UNDER 37 CFR 1.102(a)

This is a decision on the request for reconsideration to participate in the PCT Patent Prosecution Highway (PCT-PPH) pilot program and the petition under 37 CFR 1.102(a), filed May 18, 2011, to make the above-identified application special.

The request and petition are **GRANTED**.

A grantable request to participate in the PCT-PPH pilot program and petition to make special require:

(1) The U.S. application must disclose an eligible relationship to one or more PCT applications where the ISA or IPEA are the APO, IPA, JPO, KIPO, NBPR, NPI, EPO, Rospatent, IPOS, SPTO, PRV, UK IPO or USPTO;

(2) At least one claim in the PCT application has novelty, inventive step, and industrial applicability and must be free of any observations in Box VIII in the latest work product in the international stage or applicant must identify and explain why the claim(s) is/are not subject to the observation in Box VIII;

(3) Applicant must submit a copy of the claim(s) from the PCT application(s) that have novelty, inventive step, and industrial applicability along with an English translation thereof and a statement that the English translation is accurate, if the claims are not in the English language;

(4) All the claims in the U.S. application must sufficiently correspond or be amended to sufficiently correspond to the claim(s) that have novelty, inventive step, and industrial applicability in the PCT application(s);

(5) Examination of the U.S. application has not begun;

(6) Applicant must submit a copy of the latest international work product from the PCT application indicating that the claim(s) have novelty, inventive step, and industrial applicability along with an English translation thereof if the latest international work

product is not in the English language; and

(7) Applicant must submit an IDS listing the documents cited by the PCT examiner in the international work product along with copies of documents except U.S. patents or U.S. patent application publications.

The request to participate in the PPH program and petition comply with the above requirements. Accordingly, the above-identified application has been accorded "special" status.

The application is being forwarded to the examiner for action on the merits commensurate with this decision.

Any inquiry regarding this decision should be directed to Blaine Copenheaver, Quality Assurance Specialist, at (571) 272-1156.

All other inquiries concerning the examination or status of the application is accessible in the PAIR system at http://www.uspto.gov/ebc/index.html.

/Blaine Copenheaver/

Blaine Copenheaver
Quality Assurance Specialist
Technology Center 1700

UNITED STATES PATENT AND TRADEMARK OFFICE

UNITED STATES DEPARTMENT OF COMMERCE
United States Patent and Trademark Office
Address: COMMISSIONER FOR PATENTS
P.O. Box 1450
Alexandria, Virginia 22313-1450
www.uspto.gov

APPLICATION NO.	FILING DATE	FIRST NAMED INVENTOR	ATTORNEY DOCKET NO.	CONFIRMATION NO.
12/544,356	08/20/2009	Nao Mishima	SAKAP208US	9207

7590 04/28/2011
TUROCY & WATSON, LLP
127 Public Square
57th Floor, Key Tower
CLEVELAND, OH 44114

EXAMINER
AHMED, SAMIR ANWAR

ART UNIT	PAPER NUMBER
2624	

NOTIFICATION DATE	DELIVERY MODE
04/28/2011	ELECTRONIC

DECISION GRANTING PETITION UNDER 37 CFR 1.138(d)

The declaration of express abandonment is recognized

This is in response to the petition under 37 CFR 1.138(d), requesting for a refund of any previously paid search fee and excess claims fee in the above-identified application.

The petition is granted.

The express abandonment is recognized. Any previously paid search fee and excess claims fee are hereby refunded.

Telephone inquiries should be directed to the Office of Data Management at (571) 272-4200.

Patent Publication Branch
Office of Data Management

FORM PET651G (Rev. 08/07)

UNITED STATES PATENT AND TRADEMARK OFFICE

Commissioner for Patents
United States Patent and Trademark Office
P.O. Box 1450
Alexandria, VA 22313-1450
www.uspto.gov

MAILED

DEC 20 2010

OFFICE OF PETITIONS

OSTERRIEDER, LLC
1109 GROSS STREET
HOUSTON TX 77019

In re Application of	:	
Steven Caldecott	:	
Application No. 12/544,387	:	ON PETITION
Filed: August 20, 2009	:	
Attorney Docket No. GJE.4010.PAT	:	

This is a decision regarding your request under 37 CFR 1.28. for acceptance of a fee deficiency submission and loss of small entity status filed October 19, 2010.

On September 1, 1998, the Court of Appeals for the Federal Circuit held that 37 CFR 1.28(c) is the sole provision governing the time for correction of the erroneous payment of the issue fee as a small entity. See DH Technology v. Synergystex International, Inc.. 154 F.33d 1333, 47 USPQ2d 1865 (Fed. Cir. Sept. 1, 1998).

The Office no longer investigates or rejects original or reissue applications under 37 CFR 1.56. 1098 Off. Gaz. Pat. Office 502 (January 3, 1989). Therefore nothing in this Notice is intended to imply that an investigation was done.

Your fee deficiency submission in the amount of $953, under 37 CFR 1.28, is hereby accepted and the petition is **GRANTED**. Status as a small entity has also been removed.

Inquiries related to this communication should be directed to the Office of Petitions Staff at (571) 272-3282.

Patricia Faison-Ball

Patricia Faison-Ball
Senior Petitions Attorney
Office of Petitions

Doc Code: PET.GREEN
Document Description: Petition for Green Tech Pilot

PTO/SB/420 (11-10)
Approved for use through 01/31/2011. OMB 0651-0062
U.S. Patent and Trademark Office; U. S. DEPARTMENT OF COMMERCE
Under the Paperwork Reduction Act of 1995, no persons are required to respond to a collection of information unless it displays a valid OMB control number.

PETITION TO MAKE SPECIAL UNDER THE GREEN TECHNOLOGY PILOT PROGRAM

Attorney Docket Number: 81167359	Application Number (if known): 12544389	Filing date: August 20, 2009
First Named Inventor: Quiping Qu		
Title: IGNITION COIL WITH IONIZATION AND DIGITIAL FEEDBACK FOR AN INTERNAL COMBUSTION ENGINE		

APPLICANT HEREBY REQUESTS TO PARTICIPATE IN THE GREEN TECHNOLOGY PILOT PROGRAM FOR THE ABOVE-IDENTIFIED APPLICATION. See Instruction Sheet on page 2.

This petition must be timely filed electronically using the USPTO electronic filing system, EFS-Web.

1. By filing this petition:

   Applicant is requesting early publication: Applicant hereby requests early publication under 37 CFR 1.219 and the publication fee set forth in 37 CFR 1.18(d) accompanies this request.

2. By filing this petition: applicant is agreeing to make an election without traverse in a telephonic interview and elect an invention that meets the eligibility requirements for the Green Technology Pilot Program, if the Office determines that the claims are not obviously directed to a single invention. See Instruction Sheet.

3. This request is accompanied by statements of special status for the eligibility requirement.

4. The application contains no more than three (3) independent claims and twenty (20) total claims.

5. The application does not contain any multiple dependent claims.

6. Other attachments: _____

Signature /David S. Bir/	Date 03-02-2011
Name (Print/Typed) David S. Bir	Registration Number 38383

Note: *Signatures of all the inventors or assignees of record of the entire interest or their representative(s) are required in accordance with 37 CFR 1.33 and 11.18. Please see 37 CFR 1.4(d) for the form of the signature. If necessary, submit multiple forms for more than one signature see below*.*

☐ *Total of ..... forms are submitted.

The information is required to obtain or retain a benefit by the public which is to file (and by the USPTO to process) an application. Confidentiality is governed by 35 U.S.C. 122 and 37 CFR 1.11 and 1.14. This collection is estimated to take 12 hours to complete, including gathering, preparing, and submitting the completed application form to the USPTO. Time will vary depending upon the individual case. Any comments on the amount of time you require to complete this form and/or suggestions for reducing this burden, should be sent to the Chief Information Officer, U.S. Patent and Trademark Office, U.S. Department of Commerce, P.O. Box 1450, Alexandria, VA 22313-1450. DO NOT SEND FEES OR COMPLETED FORMS TO THIS ADDRESS. **SEND TO: Commissioner for Patents, P.O. Box 1450, Alexandria, VA 22313-1450.**

If you need assistance in completing the form, call 1-800-PTO-9199 and select option 2.

Under the Paperwork Reduction Act of 1995, no persons are required to respond to a collection of information unless it displays a valid OMB control number.

Instruction Sheet for Petition to Make Special Under the Green Technology Pilot Program

(Not to be Submitted to the USPTO)

The following is a summary of the requirements (for more information see the notices (i) "Pilot Program for Green Technologies Including Greenhouse Gas Reduction," (ii) "Elimination of Classification Requirement in the Green Technology Pilot Program," and (iii) "Expansion and Extension of the Green Technology Pilot Program," available on the USPTO web site at http://www.uspto.gov/patents/init_events/green_tech.jsp):

1) The application must be a non-reissue, non-provisional utility application filed under 35 U.S.C. 111 (a), or an international application that has entered the national stage in compliance with 35 U.S.C. 371, irrespective of the filing date of the application. Reexamination proceedings are excluded from this pilot program.

2) The application must contain three or fewer independent claims and twenty or fewer total claims. The application must not contain any multiple dependent claims. For an application that contains more than three independent claims or twenty total claims, or multiple dependent claims, applicant must file a preliminary amendment in compliance with 37 CFR 1.121 to cancel the excess claims and/or the multiple dependent claims at the time the petition to make special is filed.

3) The claims must be directed to a single invention that materially enhances the quality of the environment, or that materially contributes to: (1) the discovery or development of renewable energy resources; (2) the more efficient utilization and conservation of energy resources; or (3) green house gas emission reduction (see the eligibility requirements of sections II and III of the notice (i) cited above). The petition must include a statement that, if the USPTO determines that the claims are directed to multiple inventions (e.g., in a restriction requirement), applicant will agree to make an election without traverse in a telephonic interview, and elect an invention that meets the eligibility requirements in section II or III of the notice (i) cited above.

4) The petition to make special must be timely filed electronically using the USPTO electronic filing system, EFS-Web, and selecting the document description of "Petition for Green Tech Pilot" on the EFS-Web screen. Applicant should use form PTO/SB/420, which is available as a Portable Document Format (PDF) fillable form in EFS-Web and on the USPTO Web site.

5) The petition to make special must be filed at least one day prior to the date that a first Office action (which may be an Office action containing only a restriction requirement) appears in the Patent Application Information Retrieval (PAIR) system. Applicant may check the status of the application using PAIR.

6) The petition to make special must be accompanied by a request for early publication in compliance with 37 CFR 1.219 and the publication fee set forth in 37 CFR 1.18(d).

Privacy Act Statement

The **Privacy Act of 1974 (P.L. 93-579)** requires that you be given certain information in connection with your submission of the attached form related to a patent application or patent. Accordingly, pursuant to the requirements of the Act, please be advised that: (1) the general authority for the collection of this information is 35 U.S.C. 2(b)(2); (2) furnishing of the information solicited is voluntary; and (3) the principal purpose for which the information is used by the U.S. Patent and Trademark Office is to process and/or examine your submission related to a patent application or patent. If you do not furnish the requested information, the U.S. Patent and Trademark Office may not be able to process and/or examine your submission, which may result in termination of proceedings or abandonment of the application or expiration of the patent.

The information provided by you in this form will be subject to the following routine uses:

1. The information on this form will be treated confidentially to the extent allowed under the Freedom of Information Act (5 U.S.C. 552) and the Privacy Act (5 U.S.C 552a). Records from this system of records may be disclosed to the Department of Justice to determine whether disclosure of these records is required by the Freedom of Information Act.
2. A record from this system of records may be disclosed, as a routine use, in the course of presenting evidence to a court, magistrate, or administrative tribunal, including disclosures to opposing counsel in the course of settlement negotiations.
3. A record in this system of records may be disclosed, as a routine use, to a Member of Congress submitting a request involving an individual, to whom the record pertains, when the individual has requested assistance from the Member with respect to the subject matter of the record.
4. A record in this system of records may be disclosed, as a routine use, to a contractor of the Agency having need for the information in order to perform a contract. Recipients of information shall be required to comply with the requirements of the Privacy Act of 1974, as amended, pursuant to 5 U.S.C. 552a(m).
5. A record related to an International Application filed under the Patent Cooperation Treaty in this system of records may be disclosed, as a routine use, to the International Bureau of the World Intellectual Property Organization, pursuant to the Patent Cooperation Treaty.
6. A record in this system of records may be disclosed, as a routine use, to another federal agency for purposes of National Security review (35 U.S.C. 181) and for review pursuant to the Atomic Energy Act (42 U.S.C. 218(c)).
7. A record from this system of records may be disclosed, as a routine use, to the Administrator, General Services, or his/her designee, during an inspection of records conducted by GSA as part of that agency's responsibility to recommend improvements in records management practices and programs, under authority of 44 U.S.C. 2904 and 2906. Such disclosure shall be made in accordance with the GSA regulations governing inspection of records for this purpose, and any other relevant (*i.e.*, GSA or Commerce) directive. Such disclosure shall not be used to make determinations about individuals.
8. A record from this system of records may be disclosed, as a routine use, to the public after either publication of the application pursuant to 35 U.S.C. 122(b) or issuance of a patent pursuant to 35 U.S.C. 151. Further, a record may be disclosed, subject to the limitations of 37 CFR 1.14, as a routine use, to the public if the record was filed in an application which became abandoned or in which the proceedings were terminated and which application is referenced by either a published application, an application open to public inspection or an issued patent.
9. A record from this system of records may be disclosed, as a routine use, to a Federal, State, or local law enforcement agency, if the USPTO becomes aware of a violation or potential violation of law or regulation.

UNITED STATES PATENT AND TRADEMARK OFFICE

UNITED STATES DEPARTMENT OF COMMERCE
United States Patent and Trademark Office
Address: COMMISSIONER FOR PATENTS
P.O. Box 1450
Alexandria, Virginia 22313-1450
www.uspto.gov

APPLICATION NO.	FILING DATE	FIRST NAMED INVENTOR	ATTORNEY DOCKET NO.	CONFIRMATION NO.
12/544,389	08/20/2009	Qiuping Qu	81167359	9270

28395 7590 03/18/2011
BROOKS KUSHMAN P.C./FGTL
1000 TOWN CENTER
22ND FLOOR
SOUTHFIELD, MI 48075-1238

EXAMINER
HAMAOUI, DAVID E

ART UNIT	PAPER NUMBER
3747	

MAIL DATE	DELIVERY MODE
03/18/2011	PAPER

Please find below and/or attached an Office communication concerning this application or proceeding.

The time period for reply, if any, is set in the attached communication.

UNITED STATES PATENT AND TRADEMARK OFFICE

Commissioner for Patents
United States Patent and Trademark Office
P.O. Box 1450
Alexandria, VA 22313-1450
www.uspto.gov

BROOKS KUSHMAN P.C./FGTL
1000 TOWN CENTER
22ND FLOOR
SOUTHFIELD MI 48075-1238

In re Application of	:	
QU, QIUPING et al	:	DECISION ON PETITION
Application No. 12/544,389	:	TO MAKE SPECIAL UNDER
Filed: Aug. 20, 2009	:	THE GREEN TECHNOLOGY
Attorney Docket No. 81167359	:	PILOT PROGRAM

This is a decision on the petition under 37 CFR 1.102, filed March 7, 2011, to make the above-identified application special under the pilot program for applications pertaining to Green Technologies as set forth in 74 Federal Register Notice 64666 (December 8, 2009) and amended by 75 Federal Register Notice 28554 (May 21, 2010) and 75 Federal Register Notice 69049 (November 10, 2010).

The petition is **dismissed**.

A grantable petition to make an application special under 37 CFR 1.102 and the pilot program as set forth in 74 FR 64666 must be directed to a nonprovisional application filed under 35 USC 111(a) or be a national stage entry under 35 USC 371, exclusive of any reissue applications.

If reconsideration of this decision is desired, a petition for reconsideration must be filed within ONE (1) MONTH OR THIRTY (30) DAYS from the mail date of this decision, whichever is longer. No extension of this time limit can be granted under 37 CFR 1.136(a) or (b). The petition for reconsideration should include an exhaustive attempt to provide the lacking item(s) noted below, since, after a decision on the petition for reconsideration, no further reconsideration or review of the matter will be undertaken by the Director.

In order to qualify for special status, the following requirements must be met. 1) The application must have no more than 3 independent claims and no more than 20 total claims. 2) The application must not contain any multiple dependent claims. 3) The petition must state the basis for seeking special status, i.e., the claimed invention either: A) materially enhances the quality of the environment or B) materially contributes to: i) the discovery or development of renewable energy resources, ii) the more efficient utilization and conservation of energy resources, or iii) greenhouse gas emission reduction. 4) If the disclosure is not clear on its face that the claimed

invention materially contributes under category (A) or (B), the petition must be accompanied by a statement by the applicant, assignee, or an attorney/agent registered to practice before the Office explaining how the materiality standard is met. 5) A statement that applicant will agree to make an election without traverse in a telephonic interview if a restriction requirement is made by the examiner. 6) The petition to make special must be filed electronically. 7) The petition must be filed at least one day prior to the date that a first Office Action appears in the Patent Application Information Retrieval (PAIR) system. 8) The petition must be accompanied by a request for early publication in compliance with 37 CFR 1.219 and include the publication fee as set forth in 37 CFR 1.18(d).

The requirement for a fee for consideration of the petition to make special for applications pertaining to Green Technologies has been waived. The petition lacks item # 4.

In regard to item 4, petitioner should note that the instant petition includes a statement identifying the basis for the special status (i.e., whether the instant invention (1) materially enhances the quality of the environment or materially contributes to (2) development of renewable energy resources or energy conservation, or (3) greenhouse gas reduction) as required by sections II and III of the notice. However, as stated in the notice, applicant must also provide a statement pertaining to the materiality standard if the application disclosure is not clear on its face as to the materiality of the basis for the special status of the invention. This petition lacks such a statement and it is not agreed that the application on its face meets that materiality standard. Petitioner states that the claimed invention relates to green technologies. This is not convincing. For example, it is not clear how the claimed step of "generating a pre-discharge ionization signal during charging of the ignition coil after reaching a first threshold charge level and prior to spark discharge; and determining engine operating condition in response to the pre-discharge ionization signal" will provide and enhance the quality of the environment or contribute to development of renewable energy resources or energy conservation or greenhouse gas reduction.

Any reconsideration of this decision should be submitted through the USPTO electronic filing system, EFS-Web, and selecting the document description of "Petition for Green Tech Pilot" on the EFS-Web screen.

Telephone inquiries concerning this decision should be directed to Henry C. Yuen at 571-272-4856.

The application will be forwarded to the Technology Center Art Unit 3747 for action in its regular turn.

/Henry C. Yuen/

Henry C. Yuen
Quality Assurance Specialist
Technology Center 3700

IN THE UNITED STATES PATENT AND TRADEMARK OFFICE

In re application of:

QUIPING QU

Serial No.: 12544389

Filed: August 20, 2009

For: IGNITION COIL WITH IONIZATION AND DIGITIAL FEEDBACK FOR AN INTERNAL COMBUSTION ENGINE

Attorney Docket No.: 81167359

Group Art Unit: 3747

Examiner: Hamaoui, David

REQUEST FOR RECONSIDERATION OF PETITION TO MAKE SPECIAL UNDER THE GREEN TECHNOLOGY PILOT PROGRAM

Commissioner for Patents
U.S. Patent and Trademark Office
P.O. Box 1450
Alexandria, VA 22313-1450

Dear Sir:

In response to the Decision on the Petition mailed March 18, 2011, Applicant respectfully requests reconsideration of the petition and Statement in support filed March 7, 2011 for the reasons stated herein.

The decision dismissing the petition states that the petition lacked item #4, i.e. a statement pertaining to the materiality standard. Applicant respectfully disagrees as a statement in support of the materiality standard was filed with the petition on March 7, 2011. The decision also states that it is unclear how the claimed step of "generating a pre-discharge ionization signal during charging of the ignition coil after reaching a first threshold charge level . . ." meets the requirements.

As explained in the Statement filed on March 7, 2011, the claimed invention is directed to detection and reduction of anomalous combustion conditions, such as pre-ignition or a fouled spark plug, for example, based on the ionization signal used to determine the engine operating

condition. This information is used to improve combustion control to improve fuel economy and reduce greenhouse gas emissions. As claimed in claim 6, for example, the method includes determining a misfire based on method claimed in claims 3 and 1. Similarly, claims 9 and 10 include "determining fouling of the plug associated with the second ignition coil in response to the pre-discharge ionization signal . . ." Conditions such as misfire and fouled spark plugs may lead to lower fuel economy and increased emissions. As such, detection and correction of these conditions improves fuel economy and reduces greenhouse gas emissions. For example, claim 4 recites "controlling number and duration of repetitive spark discharges . . ." and claim 18 recites "repetitively charging the ignition coil to generate repetitive spark discharges" which can be used to correct a fouled spark plug, for example, or to increase ignition energy for a partially fouled spark plug for more efficient combustion. Similarly, claim 20 is directed to detecting pre-ignition based on the ionization signal.

As described in greater detail in the specification, systems and methods for controlling an internal combustion engine according to the disclosure include an ignition coil associated with at least one cylinder that provides a pre-discharge ionization signal during charging of the ignition coil after reaching a threshold charge level but prior to spark discharge, and determines an operating condition, such as pre-ignition or a fouled plug, in response to the pre-discharge ionization signal. In one embodiment, the ignition coil provides a first digital signal in response to ignition coil charging that terminates when the threshold charge level is reached. In another embodiment, an ignition coil includes logic that generates a digital signal during a pre-discharge period to facilitate ionization signal monitoring of at least one other multiplexed coil connected via a common feedback signal line. In one embodiment, an ionization coil includes logic that provides at least two digital feedback signals to delineate four monitoring periods during each cylinder cycle including at least one ionization signal monitoring period to provide an indication of ignition coil dwell and spark duration in combination with combustion timing and quality.

Embodiments may be used both in applications with multiple spark plugs per cylinder, and single plug-per-cylinder applications, having multiplexed feedback signals to provide a digital feedback signal that can be used for ignition coil dwell control and diagnostics, as well as

spark duration control and diagnostics. The present disclosure also includes embodiments that provide ignition coil dwell and spark duration feedback for use in controlling the number and duration of multi-strike or repetitive spark events during a single combustion cycle.

Better detection and reduction of anomalous combustion conditions, such as misfire, pre-ignition, or a fouled spark plug, for example, improves combustion control to improve fuel economy and reduce greenhouse gas emissions.

For the reasons above, the present invention is believed to materially contribute to conservation of energy resources and the reduction of greenhouse gas emissions. Reconsideration of the decision dismissing the Petition to Make Special under the Green Technology Pilot Program is respectfully requested.

No fee is believed to be due. However, please charge any required fees to Deposit Account 06-1510.

Respectfully submitted,

ALEXANDER O'CONNOR GIBSON

By: /David S. Bir/
David S. Bir
Reg. No. 38383
Attorney for Applicant

Date: April 12, 2011

BROOKS KUSHMAN P.C.
1000 Town Center, 22nd Floor
Southfield, MI 48075-1238
Phone: 248-358-4400
Fax: 248-358-3351

UNITED STATES PATENT AND TRADEMARK OFFICE

UNITED STATES DEPARTMENT OF COMMERCE
United States Patent and Trademark Office
Address: COMMISSIONER FOR PATENTS
P.O. Box 1450
Alexandria, Virginia 22313-1450
www.uspto.gov

APPLICATION NO.	FILING DATE	FIRST NAMED INVENTOR	ATTORNEY DOCKET NO.	CONFIRMATION NO.
12/544,389	08/20/2009	Qiuping Qu	81167359	9270

28395 7590 05/04/2011
BROOKS KUSHMAN P.C./FGTL
1000 TOWN CENTER
22ND FLOOR
SOUTHFIELD, MI 48075-1238

EXAMINER
HAMAOUI, DAVID E

ART UNIT	PAPER NUMBER
3747	

MAIL DATE	DELIVERY MODE
05/04/2011	PAPER

Please find below and/or attached an Office communication concerning this application or proceeding.

The time period for reply, if any, is set in the attached communication.

UNITED STATES PATENT AND TRADEMARK OFFICE

Commissioner for Patents
United States Patent and Trademark Office
P.O. Box 1450
Alexandria, VA 22313-1450
www.uspto.gov

BROOKS KUSHMAN P.C./FGTL
1000 TOWN CENTER
22ND FLOOR
SOUTHFIELD MI 48075-1238

In re Application of	:	
QU, QIUPING et al	:	DECISION ON PETITION
Application No. 12/544,389	:	TO MAKE SPECIAL UNDER
Filed: Aug. 20, 2009	:	THE GREEN TECHNOLOGY
Attorney Docket No. 81167359	:	PILOT PROGRAM

This is a decision on the petition under 37 CFR 1.102, filed April 12, 2011, to make the above-identified application special under the pilot program for applications pertaining to Green Technologies as set forth in 74 Federal Register Notice 64666 (December 8, 2009) and amended by 75 Federal Register Notice 28554 (May 21, 2010) and 75 Federal Register Notice 69049 (November 10, 2010).

The petition is granted.

A grantable petition to make an application special under 37 CFR 1.102 and the pilot program as set forth in 74 FR 64666 must be directed to a nonprovisional application filed under 35 USC 111(a) or be a national stage entry under 35 USC 371, exclusive of any reissue applications.

In order to qualify for special status, the following requirements must be met. 1) The application must have no more than 3 independent claims and no more than 20 total claims. 2) The application must not contain any multiple dependent claims. 3) The petition must state the basis for seeking special status, i.e., the claimed invention either: A) materially enhances the quality of the environment or B) materially contributes to: i) the discovery or development of renewable energy resources, ii) the more efficient utilization and conservation of energy resources, or iii) greenhouse gas emission reduction. 4) If the disclosure is not clear on its face that the claimed invention materially contributes under category (A) or (B), the petition must be accompanied by a statement by the applicant, assignee, or an attorney/agent registered to practice before the Office explaining how the materiality standard is met. 5) A statement that applicant will agree to make an election without traverse in a telephonic interview if a restriction requirement is made by the examiner. 6) The petition to make special must be filed electronically. 7) The petition must be filed at least one day prior to the date that a first Office Action appears in the Patent Application Information Retrieval (PAIR) system. 8) The petition must be accompanied by a

request for early publication in compliance with 37 CFR 1.219 and include the publication fee as set forth in 37 CFR 1.18(d).

The requirement for a fee for consideration of the petition to make special for applications pertaining to Green Technologies has been waived.

The instant petition complies with items 1 – 8 above. Accordingly, the above-identified application has been accorded "special" status.

Telephone inquires concerning this decision should be directed to Henry C. Yuen at 571-272-4856.

This application will be forwarded to the Technology Center Art Unit 3747 for action on the merits commensurate with this decision.

/Henry C. Yuen/

Henry C. Yuen
Quality Assurance Specialist
Technology Center TC 3700

UNITED STATES PATENT AND TRADEMARK OFFICE

Commissioner for Patents
United States Patent and Trademark Office
P.O. Box 1450
Alexandria, VA 22313-1450
www.uspto.gov

BROUSE MCDOWELL LPA
388 SOUTH MAIN STREET
SUITE 500
AKRON OH 44311

MAILED

JAN 19 2011

OFFICE OF PETITIONS

In re Application of	:	
Donald R. Jamieson	:	
Application No. 12/544,442	:	DECISION ACCORDING STATUS
Filed: August 20, 2009	:	UNDER 37 CFR 1.47(b)
Attorney Docket No. 21384.50150	:	

This is in response to the renewed petition under 37 CFR 1.47(b), filed December 22, 2010.

The petition under 37 CFR 1.47(b) is **GRANTED**.

Applicant filed a petition under 37 CFR 1.47(b) on February 9, 2010. However, the petition was dismissed in a decision mailed on March 25, 2010. The petition was dismissed because Rule 47(b) applicant did not submit proof that the Rule 47(b) applicant had sufficient proprietary interest in the subject matter to justify the filing of the application. The decision stated that Rule 47 applicant must submit a copy of an assignment from non-signing inventor Jamieson or a copy of an employment agreement executed by Jamieson. However, if applicant could not show a sufficient proprietary interest by supplying a copy of the assignment for the above-identified application (or a copy of an agreement to assign, e.g. an employment agreement), a proprietary interest "may be demonstrated by an appropriate legal memorandum to the effect that a court of competent jurisdiction (federal, state, or foreign) would by the weight of authority in that jurisdiction award title of the invention to the 37 CFR 1.47(b) applicant."[1]

On renewed petition filed May 24, 2010, petitioner did not submit a copy of an assignment or an employment agreement executed by

[1] MPEP 409.03(f).

Jamieson, or a legal memorandum as set forth above. Rather, petitioner submitted an affidavit from Brian Vandrak, Vice President of Engineering for Enerco Group, stating that Jamieson has "assigned the Intellectual Property to CFM, or otherwise had a duty to assign the Intellectual Property to CFM". As such, the renewed petition was dismissed in a decision mailed on June 22, 2010. Rule 47 applicant was instructed to either submit a copy of an assignment (executed by Jamieson), and employment agreement (executed by Jamieson), or an appropriate legal memorandum to the effect that a court of competent jurisdiction would by the weight of authority in that jurisdiction award title of the invention to the 37 CFR 1.47(b) applicant.

With the instant renewed petition, Rule 47 applicant has submitted an appropriate legal memorandum to the effect that a court of competent jurisdiction would by the weight of authority in that jurisdiction award title of the invention to the 37 CFR 1.47(b) applicant.

The above-identified application and papers have been reviewed and found to be in compliance with 37 CFR 1.47(b). Accordingly, the above-identified application is hereby accorded Rule 1.47(b) status. As provided in 37 CFR 1.47(c), this Office will forward notice of this application's filing to the non-signing inventors at the last known address provided in the petition. Notice of the filing of this application will also be published in the Official Gazette.

The application is being forwarded to the Office of Patent Application Processing for pre-examination processing.

Telephone inquiries related to this decision may be directed to the undersigned at (571)272-3207.

Cliff Congo
Petitions Attorney
Office of Petitions

UNITED STATES PATENT AND TRADEMARK OFFICE

Commissioner for Patents
United States Patent and Trademark Office
P.O. Box 1450
Alexandria, VA 22313-1450
www.uspto.gov

DONALD JAMIESON
1420 ALDERCREST CT
OAKVILLE
ONTARIO
CANADA L6M 1X3

MAILED
JAN 19 2011
OFFICE OF PETITIONS

In re Application of Donald R. Jamieson Application No. 12/544,442 Filed: August 20, 2009 Title: Gas-Fired Heater with Carbon Dioxide Detector	: : : : :	LETTER

Dear Mr. Jamieson:

You are named as the sole inventor in the above-identified United States patent application filed under the provisions of 35 USC 116 (United States Code) and 37 CFR 1.47(b), Rules of Practice in Patent Cases. Should a patent be granted on the application you will be designated therein as the sole inventor.

As the named inventor you are entitled to inspect any paper in the file wrapper of the application, order copies of all or any part thereof (at a prepaid cost per 37 CFR 1.19) or make your position of record in the application. Alternatively, you may arrange to do any of the preceding through a registered patent attorney or agent presenting written authorization from you. If you care to join the application, agent of record would presumably assist you. Joining in the application would entail the filing of an appropriate oath or declaration by you pursuant to 37 CFR 1.63.

Telephone inquiries regarding this communication should be directed to Petitions Attorney Cliff Congo at (571)272-3207. Requests for information regarding your application should be directed to the File Information Unit at (703) 308-2733. Information regarding how to pay for and order a copy of the application, or a specific paper in the application, should be directed to the Certification Division at (703) 308-9726 or 1-800-972-6382 (outside the Washington D.C. area).

Cliff Congo
Petitions Attorney
Office of Petitions

UNITED STATES PATENT AND TRADEMARK OFFICE

Commissioner for Patents
United States Patent and Trademark Office
P.O. Box 1450
Alexandria, VA 22313-1450
www.uspto.gov

BROUSE MCDOWELL LPA
388 SOUTH MAIN STREET
SUITE 500
AKRON OH 44311

MAILED
JAN 11 2012
OFFICE OF PETITIONS

In re Application of	:	
Brian S. Vandrak	:	
Application No. 12/544,454	:	DECISION DISMISSING PETITIONS
Filed: August 20, 2009	:	UNDER 37 CFR 1.78(a)(3) AND (a)(6)
Attorney Docket No. 21384.49896	:	

This is a decision on the petition under 37 CFR §§ 1.78(a)(3) and 1.78(a)(6), filed October 24, 2011, to accept an unintentionally delayed claim under 35 U.S.C. §§ 120 and 119(e) for the benefit of priority to the prior-filed nonprovisional and provisional applications set forth in the concurrently filed amendment.

The petition is **DISMISSED**

A petition for acceptance of a claim for late priority under 37 CFR §§ 1.78(a)(3) and 1.78(a)(6) is only applicable to those applications filed on or after November 29, 2000 and after the expiration of the period specified in 37 CFR §§ 1.78(a)(2)(ii) and 1.78(a)(5)(ii). In addition, the petition under 37 CFR §§ 1.78(a)(3) and 1.78(a)(6) must be accompanied by:

(1) the reference required by 35 U.S.C. §§ 120 and 119(e) and 37 CFR §§ 1.78(a)(2)(i) and 1.78(a)(5)(i) of the prior-filed application, unless previously submitted;
(2) the surcharge set forth in § 1.17(t); and
(3) a statement that the entire delay between the date the claim was due under 37 CFR §§ 1.78(a)(2)(ii) and 1.78(a)(5)(ii) and the date the claim was filed was unintentional. The Director may require additional where there is a question whether the delay was unintentional.

The petition does not comply with item (1).

With regards to item (1), when a later-filed application is claiming the benefit of a prior- filed nonprovisional application under 35 U.S.C. 120, 121, or 365(c), the later-filed application must be copending with the prior application or with an intermediate nonprovisional application similarly entitled to the benefit of the filing date of the prior application. Copendency is defined in the clause which requires that the later-filed application must be filed before: (A) the patenting of the prior application; (B) the abandonment of the prior application; or (C) the termination of proceedings in the prior application.

Petitioner has requested benefit of Application No. 10/518,202, filed on December 16, 2004 and issued as Patent No. 7,300,278 on November 27, 2007. Since the instant application was filed on August 20, 2009, no copendency exists between these two applications. Copendency between the instant application and the prior application is required. Since the applications are not copending, the benefit claim to the prior-filed nonprovisional is improper. Applicant is required

to delete the reference to the prior-filed application from the first sentence(s) of the specification, unless applicant can establish copendency between the applications.

Additionally, petitioner should note that the continuity chain claimed is also improper.

MPEP 201.11(III)(3) states:

If applicant wishes that the pending application have the benefit of the filing date of the first filed application, applicant must, besides making reference to the intermediate application, also make reference to the first application. See *Sticker Indus. Supply Corp. v. Blaw-Knox Co.*, 405 F.2d 90, 160 USPQ 177 (7th Cir. 1968) and *Hovlid v. Asari*, 305 F. 2d 747, 134 USPQ 162 (9th Cir. 1962). The reference to the prior applications must identify all of the prior applications and indicate the relationship (i.e., continuation, divisional, or continuation-in-part) between each nonprovisional application in order to establish copendency throughout the entire chain of prior applications. Appropriate references must be made in each intermediate application in the chain of prior applications. If an applicant desires, for example, the following benefit claim: "this application is a continuation of Application No. C, filed ---, which is a continuation of Application No. B, filed ---, which claims the benefit of provisional Application No. A, filed ---," then Application No. C must have a reference to Application No. B and provisional Application No. A, and Application No.B must have a reference to provisional Application No. A.

A review of current USPTO records reveals no reference in Application No. 10/518,202 to Application Nos. 10/605,486, 10/051,561, 09/731,156, and 60,169,062. In order to claim the benefit of the previous applications, a petition under 37 CFR 1.78(a)(3) and 1.78(a)(6)would have to be filed in Application No. 10/518,202 to correct the above.

Before the petition under 37 CFR §§ 1.78(a)(3) and 1.78(a)(6) can be granted, a renewed petition and either an Application Data Sheet or a substitute amendment (complying with the provisions of 37 CFR 1.121 and 37 CFR 1.76(b)(5)) to correct the above matters are required.

Additionally, it is noted that attorney, John M. Skeriotis has a registration number of 43,129 not 43,127 as indicated on the petition.

Further correspondence with respect to this matter should be addressed as follows:

By mail: Mail Stop PETITIONS
Commissioner for Patents
Post Office Box 1450
Alexandria, VA 22313-1450

By hand: Customer Service Window
Mail Stop Petitions
Randolph Building
401 Dulany Street
Alexandria, VA 22314

By fax: (571) 273-8300
ATTN: Office of Petitions

Any questions concerning this matter may be directed to Joan Olszewski at (571) 272-7751.

/Liana Walsh/
Liana Walsh
Petitions Examiner
Office of Petitions

UNITED STATES PATENT AND TRADEMARK OFFICE

Commissioner for Patents
United States Patent and Trademark Office
P.O. Box 1450
Alexandria, VA 22313-1450
www.uspto.gov

FARIBA SIRJANI
925 DELWARE AVENUE, APT. 9C
BUFFALO, NY 14209

MAILED
MAR 14 2011
OFFICE OF PETITIONS

In re Application of	:	
Eri Miyasaka	:	
Application No. 12/544,462	:	DECISION ON PETITION
Filed: August 20, 2009	:	TO WITHDRAW
Attorney Docket No. MIYASAKA-002	:	FROM RECORD
	:	

This is a decision on the Request to Withdraw as attorney or agent of record under 37 C.F.R. § 1.36(b), filed February 2, 2011.

The request is **APPROVED**.

A grantable request to withdraw as attorney/agent of record must be signed by every attorney/agent seeking to withdraw or contain a clear indication that one attorney is signing on behalf of another/others. A request to withdraw will not be approved unless at least 30 (thirty) days would remain between the date of approval and the later of the expiration date of a time to file a response or the expiration date of the maximum time period which can be extended under 37 C.F.R. § 1.136(a).

The request was signed by Fariba Sirjani. Fariba Sirjani have been withdrawn as attorney or agent of record; all other attorneys remain of record.

The correspondence address of record remains unchanged.

Telephone inquiries concerning this decision should be directed to Terri Johnson at 571-272-2991.

/Terri Johnson/
Terri Johnson
Petitions Examiner
Office of Petitions

cc: **MEREDITH & KEYHANI, PLLC**
330 MADISON AVE.
6TH FLOOR
NEW YORK NY 10017

PTO/SB/20PCT-KR (06-10)
Approved for use through 01/31/2012. OMB 0651-0058
U.S. Patent and Trademark Office; U. S. DEPARTMENT OF COMMERCE
Under the Paperwork Reduction Act of 1995, no persons are required to respond to a collection of information unless it displays a valid OMB control number.

REQUEST FOR PARTICIPATION IN THE PATENT COOPERATION TREATY - PATENT PROSECUTION HIGHWAY (PCT-PPH) PILOT PROGRAM BETWEEN THE KOREAN INTELLECTUAL PROPERTY OFFICE (KIPO) AND THE USPTO

Application No:	12/544493	Filing date:	08/20/2009
First Named Inventor:	DUGGAN, Robert J.		
Title of the Invention:	POSITION LOCATING BY POLYHEDRAL MORPHING		

THIS REQUEST FOR PARTICIPATION IN THE PCT-PPH PILOT PROGRAM ALONG WITH THE REQUIRED DOCUMENTS MUST BE SUBMITTED VIA EFS-WEB. INFORMATION REGARDING EFS-WEB IS AVAILABLE AT HTTP://WWW.USPTO.GOV/EBC/EFS_HELP.HTML

APPLICANT HEREBY REQUESTS PARTICIPATION IN THE PCT-PPH PROGRAM AND PETITIONS TO MAKE THE ABOVE-IDENTIFIED APPLICATION SPECIAL UNDER THE PCT-PPH PROGRAM.

The above-identified application is (1) a national stage entry of the corresponding PCT application, or (2) a national stage entry of another PCT application which claims priority to the corresponding PCT application, or (3) a national application that claims domestic/ foreign priority to the corresponding PCT application, or (4) a national application which forms the basis for the priority claim in the corresponding PCT application, or (5) a continuing application of a U.S. application that satisfies one of (1) to (4) above, or (6) a U.S. application that claims domestic benefit to a U.S. provisional application which forms the basis for the priority claim in the corresponding PCT application.

The corresponding PCT application number(s) is/are: PCT/US2010/046047

The international date of the corresponding PCT application(s) is/are: 08/20/2010

I. List of Required Documents:

a. **A copy of the latest international work product (WO/ISA, WO/IPEA, or IPER) in the above–identified corresponding PCT application(s)**

- [x] Is attached.
- [ ] Is not attached because the document is already in the U.S. application.

b. **A copy of all claims which were indicated as having novelty, inventive step and industrial applicability in the above-identified corresponding PCT application(s).**

- [ ] Is attached.
- [x] Is not attached because the document is already in the U.S. application.

c. **English translations of the documents in a. and b. above are attached (if the documents are not in the English language). A statement that the English translation is accurate is attached for the document in b. above.**

This collection of information is required by 35 U.S.C. 119, 37 CFR 1.55, and 37 CFR 1.102(d). The information is required to obtain or retain a benefit by the public, which is to file (and by the USPTO to process) an application. Confidentiality is governed by 35 U.S.C. 122 and 37 CFR 1.11 and 1.14. This collection is estimated to take 2 hours to complete, including gathering, preparing, and submitting the completed application form to the USPTO. Time will vary depending upon the individual case. Any comments on the amount of time you require to complete this form and/or suggestions for reducing this burden should be sent to the Chief Information Officer, U.S. Patent and Trademark Office, U.S. Department of Commerce, P.O. Box 1450, Alexandria, VA 22313-1450. DO NOT SEND FEES OR COMPLETED FORMS TO THIS ADDRESS.

Approved for use through 01/31/2012. OMB 0651-0058
U.S.Patent and Trademark Office; U.S. DEPARTMENT OF COMMERCE
Under the Paperwork Reduction Act of 1995, no persons are required to respond to a collection of information unless it displays a valid OMB control number.

REQUEST FOR PARTICIPATION IN THE PCT-PPH PILOT PROGRAM BETWEEN THE KIPO AND THE USPTO

(continued)

Application No.:	12/544493
First Named Inventor:	DUGGAN, Robert J.

d. **(1) An information disclosure statement listing the documents cited in the international work products (ISR, WO/ISA, WO/IPEA, IPER) of the corresponding PCT application.**

☐ Is attached

☒ Has already been filed in the above-identified U.S. application on 05/04/2011

(2) Copies of all documents (except) for U.S. patents or U.S. patent application publications)

☐ Are attached.

Have already been filed in the above-identified U.S. application on 05/04/2011

II. Claims Correspondence Table:

Claims in US Application	Patentable Claims in the corresponding PCT Application	Explanation regarding the correspondence
1-20	1-20	Identical

III. All the claims in the US application sufficiently correspond to the patentable claims in the corresponding PCT application.

Signature /David A. Rardin, Reg. No. 52,153/	Date 05/04/2011
Name (Print/Typed) David A. Rardin	Registration Number 52,153

Privacy Act Statement

The **Privacy Act of 1974 (P.L. 93-579)** requires that you be given certain information in connection with your submission of the attached form related to a patent application or patent. Accordingly, pursuant to the requirements of the Act, please be advised that: (1) the general authority for the collection of this information is 35 U.S.C. 2(b)(2); (2) furnishing of the information solicited is voluntary; and (3) the principal purpose for which the information is used by the U.S. Patent and Trademark Office is to process and/or examine your submission related to a patent application or patent. If you do not furnish the requested information, the U.S. Patent and Trademark Office may not be able to process and/or examine your submission, which may result in termination of proceedings or abandonment of the application or expiration of the patent.

The information provided by you in this form will be subject to the following routine uses:

1. The information on this form will be treated confidentially to the extent allowed under the Freedom of Information Act (5 U.S.C. 552) and the Privacy Act (5 U.S.C 552a). Records from this system of records may be disclosed to the Department of Justice to determine whether disclosure of these records is required by the Freedom of Information Act.
2. A record from this system of records may be disclosed, as a routine use, in the course of presenting evidence to a court, magistrate, or administrative tribunal, including disclosures to opposing counsel in the course of settlement negotiations.
3. A record in this system of records may be disclosed, as a routine use, to a Member of Congress submitting a request involving an individual, to whom the record pertains, when the individual has requested assistance from the Member with respect to the subject matter of the record.
4. A record in this system of records may be disclosed, as a routine use, to a contractor of the Agency having need for the information in order to perform a contract. Recipients of information shall be required to comply with the requirements of the Privacy Act of 1974, as amended, pursuant to 5 U.S.C. 552a(m).
5. A record related to an International Application filed under the Patent Cooperation Treaty in this system of records may be disclosed, as a routine use, to the International Bureau of the World Intellectual Property Organization, pursuant to the Patent Cooperation Treaty.
6. A record in this system of records may be disclosed, as a routine use, to another federal agency for purposes of National Security review (35 U.S.C. 181) and for review pursuant to the Atomic Energy Act (42 U.S.C. 218(c)).
7. A record from this system of records may be disclosed, as a routine use, to the Administrator, General Services, or his/her designee, during an inspection of records conducted by GSA as part of that agency's responsibility to recommend improvements in records management practices and programs, under authority of 44 U.S.C. 2904 and 2906. Such disclosure shall be made in accordance with the GSA regulations governing inspection of records for this purpose, and any other relevant (*i.e.*, GSA or Commerce) directive. Such disclosure shall not be used to make determinations about individuals.
8. A record from this system of records may be disclosed, as a routine use, to the public after either publication of the application pursuant to 35 U.S.C. 122(b) or issuance of a patent pursuant to 35 U.S.C. 151. Further, a record may be disclosed, subject to the limitations of 37 CFR 1.14, as a routine use, to the public if the record was filed in an application which became abandoned or in which the proceedings were terminated and which application is referenced by either a published application, an application open to public inspection or an issued patent.
9. A record from this system of records may be disclosed, as a routine use, to a Federal, State, or local law enforcement agency, if the USPTO becomes aware of a violation or potential violation of law or regulation.

UNITED STATES PATENT AND TRADEMARK OFFICE

UNITED STATES DEPARTMENT OF COMMERCE
United States Patent and Trademark Office
Address: COMMISSIONER FOR PATENTS
P.O. Box 1450
Alexandria, Virginia 22313-1450
www.uspto.gov

APPLICATION NO.	FILING DATE	FIRST NAMED INVENTOR	ATTORNEY DOCKET NO.	CONFIRMATION NO.
12/544,493	08/20/2009	Robert J. Duggan	ARPT005-US	9448

24222 7590 05/25/2011
Vern Maine & Associates
547 AMHERST STREET, 3RD FLOOR
NASHUA, NH 03063-4000

EXAMINER
LEE, BENJAMIN C

ART UNIT	PAPER NUMBER
2612	

NOTIFICATION DATE	DELIVERY MODE
05/25/2011	ELECTRONIC

Please find below and/or attached an Office communication concerning this application or proceeding.

The time period for reply, if any, is set in the attached communication.

Notice of the Office communication was sent electronically on above-indicated "Notification Date" to the following e-mail address(es):

patents@vernmaine.com
jjudkins@vernmaine.com

UNITED STATES PATENT AND TRADEMARK OFFICE

Commissioner for Patents
United States Patent and Trademark Office
P.O. Box 1450
Alexandria, VA 22313-1450
www.uspto.gov

Vern Maine & Associates
547 AMHERST STREET, 3RD FLOOR
NASHUA NH 03063-4000

In re Application of	:	
DUGGAN, ROBERT J. et al.	:	DECISION ON REQUEST TO
Application No. **12/544,493**	:	PARTICIPATE IN PATENT
Filed: **August 20, 2009**	:	PROSECUTION HIGHWAY
Attorney Docket No. **ARPT005-US**	:	PROGRAM AND PETITION
	:	TO MAKE SPECIAL UNDER
	:	37 CFR 1.102(a)

This is a decision on the renewed request to participate in the PCT Patent Prosecution Highway (PPH) pilot program and the petition under 37 CFR 1.102(a), filed May 4, 2011 to make the above-identified application special.

The request and petition are **GRANTED**.

A grantable request to participate in the PCT-PPH pilot program and petition to make special require:

(1) The U.S. application be (a) a national stage entry of the corresponding PCT application, or (b) a national stage entry of another PCT application which claims priority to the corresponding PCT application, or (c) a national stage application that claims domestic/foreign priority to the corresponding PCT application, (d) a national application which forms the basis for the priority claim in the corresponding PCT application, or (e) a continuation application of the U.S. application which satisfies one of the above (a) to (d) scenarios.
(2) A copy of the latest international work product (WO/ISA, WO/IPEA, or IPER) in the corresponding PCT application(s) which indicates at least one claim in the PCT application has novelty, inventive step, and industrial applicability.
(3) A copy of all claims which were indicated as having novelty, inventive step and industrial applicability in the corresponding PCT application(s).
(4) English translations of the documents in (2) and (3) (if the documents are not in the English language).
(5) All the claims in the U.S. application must sufficiently correspond or be amended to sufficiently correspond to the claims which were indicated as having novelty, inventive step, and industrial applicability in the corresponding PCT application(s).
(6) Examination of the U.S. application has not begun; and
(7) An information disclosure statement listing the documents cited in the international work products (ISR, WO/ISA, WO/IPEA, IPER) of the corresponding PCT application(s).

The request to participate in the PCT-PPH pilot program and petition comply with the above requirements. Accordingly, the above-identified application has been accorded "special" status.

Telephone inquiries concerning this decision should be directed to Daniel Swerdlow at 571-272-7531.

All other inquiries concerning the examination or status of the application should be directed to Patent Application Information Retrieval (PAIR) system.

The application is undergoing pre-examination processing. Once it is released for examination, the application will be forwarded to the examiner for action on the merits commensurate with this decision.

/ Daniel Swerdlow /

Daniel Swerdlow
Quality Assurance Specialist
Technology Center 2600
Communications

UNITED STATES PATENT AND TRADEMARK OFFICE

UNITED STATES DEPARTMENT OF COMMERCE
United States Patent and Trademark Office
Address: COMMISSIONER FOR PATENTS
P.O. Box 1450
Alexandria, Virginia 22313-1450
www.uspto.gov

APPLICATION NO.	FILING DATE	FIRST NAMED INVENTOR	ATTORNEY DOCKET NO.	CONFIRMATION NO.
12/544,520	08/20/2009	Chang-bum Ko	LGCHEM 3.0-119	9497

86765 7590 07/13/2011
LGCHEM
Lerner, David, Littenberg, Krumholz & Mentlik, LLP
600 South Avenue West
Westfield, NJ 07090

EXAMINER
DESAI, ANISH P

ART UNIT	PAPER NUMBER
1788	

NOTIFICATION DATE	DELIVERY MODE
07/13/2011	ELECTRONIC

Please find below and/or attached an Office communication concerning this application or proceeding.

The time period for reply, if any, is set in the attached communication.

Notice of the Office communication was sent electronically on above-indicated "Notification Date" to the following e-mail address(es):

eOfficeAction@ldlkm.com

UNITED STATES PATENT AND TRADEMARK OFFICE

Commissioner for Patents
United States Patent and Trademark Office
P.O. Box 1450
Alexandria, VA 22313-1450
www.uspto.gov

CST

July 12, 2011

In re application of Chang-bum Ko et al Serial No. 12/544,520 Filed: August 20, 2009 For: COMPOSITION OF ACRYLIC PRESSURE-SENSITIVE ADHESIVE AND SURFACE FINISHING MATERIAL COMPRISING THE SAME	:	DECISION ON REQUEST TO PARTICIPATE IN PATENT PROSECUTION HIGHWAY PROGRAM AND PETITION TO MAKE SPECIAL UNDER 37 CFR 1.102(a)

This is a decision on the request to participate in the Patent Prosecution Highway (PPH) program, filed June 13, 2011.

The request and petition are **GRANTED**.

A grantable request to participate in the PPH program and petition to make special require:

(1) The U.S. application must validly claim priority under 35 U.S.C. 119(a) to one or more applications filed in the KIPO, note where the KIPO application with similar claims is not the same application from which the U.S. application claims priority that the applicant must identify the relationship between the KIPO application with similar claims and the KIPO priority application;

(2) Applicant must submit a copy of:
a. The allowable/patentable claim(s) from the KIPO application(s) or if a copy of the allowable/patentable claims is available via the Dossier Access System (DAS) applicant may request the USPTO to obtain a copy from DAS; however, if the USPTO is unable to obtain a copy from the DAS, the applicant will be required to submit a copy;
b. An English translation of the allowable/ patentable claim(s), if applicable; and
c. A statement that the English translation is accurate, if applicable;

(3) Applicant must:
a. Ensure all the claims in the U.S. application must sufficiently correspond or be amended to sufficiently correspond to the allowable/patentable claim(s) in the KIPO application(s); and
b. Submit a claims correspondence table in English;

(4) Examination of the U.S. application has not begun;

(5) Applicant must submit:
   a. Documentation of prior office action:
      i. a copy of the office action(s) just prior to the "Decision to Grant a Patent" from each of the KIPO application(s) containing the allowable/patentable claims(s) or
      ii. if the allowable/patentable claim(s) are from "Notification of Reasons for Refusal" then the Notification of Reasons for Refusal or
      iii. if the KIPO application is a first action allowance then no office action from the KIPO is necessary should be indicated on the request/petition form:
      Further, if a copy of the documents from (i) or (ii) is available via the Dossier Access System (DAS), applicant may request the USPO obtain a copy from the DAS; however, if the USPTO is unable to obtain a copy of the DAS, the applicant will be required to submit a copy;
   b. An English language translation of the KIPO Office action from (5)(a)(i)-(ii) above if applicable; and
   c. A statement that the English translation is accurate; and

(6) Applicant must submit:
   a. An IDS listing the documents cited by the KIPO examiner in the KIPO office action (unless already submitted in this application)
   b. Copies of documents except U.S. patents or U.S. patent application publications (unless already submitted in this application).

The request to participate in the PPH program and petition comply with the above requirements. Accordingly, the above-identified application has been accorded "special" status.

The application is being forwarded to the examiner for action on the merits commensurate with this decision.

Any inquiry regarding this decision should be directed to Christine Tierney, Quality Assurance Specialist, at (571) 272-1055.

All other inquiries concerning the examination or status of the application is accessible in the PAIR system at http://www.uspto.gov/ebc/index.html.

/Christine Tierney/

Christine Tierney
Quality Assurance Specialist
Technology Center 1700

Doc Code: PET.GREEN
Document Description: Petition for Green Tech Pilot

PTO/SB/420 (11-10)
Approved for use through 01/31/2011. OMB 0651-0062
U.S. Patent and Trademark Office; U. S. DEPARTMENT OF COMMERCE
Under the Paperwork Reduction Act of 1995, no persons are required to respond to a collection of information unless it displays a valid OMB control number.

PETITION TO MAKE SPECIAL UNDER THE GREEN TECHNOLOGY PILOT PROGRAM

Attorney Docket Number: 19660-4016	Application Number (if known): 12/544,553	Filing date: 08/20/2009
First Named Inventor: Peter E. Rose		
Title: Geothermal Well Diversion Agent Formed from in Situ Decomposition of Carbonyls at High Temperature		

APPLICANT HEREBY REQUESTS TO PARTICIPATE IN THE GREEN TECHNOLOGY PILOT PROGRAM FOR THE ABOVE-IDENTIFIED APPLICATION. See Instruction Sheet on page 2.

This petition must be timely filed electronically using the USPTO electronic filing system, EFS-Web.

1. By filing this petition:

   Applicant is requesting early publication: Applicant hereby requests early publication under 37 CFR 1.219 and the publication fee set forth in 37 CFR 1.18(d) accompanies this request.

2. By filing this petition: applicant is agreeing to make an election without traverse in a telephonic interview and elect an invention that meets the eligibility requirements for the Green Technology Pilot Program, if the Office determines that the claims are not obviously directed to a single invention. See Instruction Sheet.

3. This request is accompanied by statements of special status for the eligibility requirement.

4. The application contains no more than three (3) independent claims and twenty (20) total claims.

5. The application does not contain any multiple dependent claims.

6. Other attachments: Attachment to Petition

Signature /s/ Sanjeet K. Dutta	Date 11/18/2010
Name (Print/Typed) Sanjeet K. Dutta	Registration Number 46,145

Note: Signatures of all the inventors or assignees of record of the entire interest or their representative(s) are required in accordance with 37 CFR 1.33 and 11.18. Please see 37 CFR 1.4(d) for the form of the signature. If necessary, submit multiple forms for more than one signature see below.*

x *Total of 1 forms are submitted.

The information is required to obtain or retain a benefit by the public which is to file (and by the USPTO to process) an application. Confidentiality is governed by 35 U.S.C. 122 and 37 CFR 1.11 and 1.14. This collection is estimated to take 12 hours to complete, including gathering, preparing, and submitting the completed application form to the USPTO. Time will vary depending upon the individual case. Any comments on the amount of time you require to complete this form and/or suggestions for reducing this burden, should be sent to the Chief Information Officer, U.S. Patent and Trademark Office, U.S. Department of Commerce, P.O. Box 1450, Alexandria, VA 22313-1450. DO NOT SEND FEES OR COMPLETED FORMS TO THIS ADDRESS. **SEND TO: Commissioner for Patents, P.O. Box 1450, Alexandria, VA 22313-1450.**

If you need assistance in completing the form, call 1-800-PTO-9199 and select option 2.

IN THE UNITED STATES PATENT AND TRADEMARK OFFICE

Appl. No.	:	12/544,553	Confirmation No.: 9563
Applicant	:	Peter E. Rose	
Filing Date	:	August 20, 2009	
Title	:	GEOTHERMAL WELL DIVERSION AGENT FORMED FROM IN SITU DECOMPOSITION OF CARBONYLS AT HIGH TEMPERATURE	
Group Art Unit	:	3676	
Examiner	:	Not Yet Assigned	
Docket No.	:	19660-4016	
Customer No.	:	34313	

Commissioner for Patents
EFS-Web
Petition for Green Tech Pilot

ATTACHMENT TO PETITION TO MAKE SPECIAL UNDER THE GREEN TECHNOLOGY PILOT PROGRAM

Sir:

Applicant requests expedited examination based on the Petition to Make Special under the Green Technology Pilot Program, introduced in the Federal Register on December 8, 2009, and extended in the Federal Register on November 10, 2010.

Eligibility Requirements

☐ *Applications Pertaining to Environmental Quality:* Special status is sought because the invention materially enhances the quality of the environment by contributing to the restoration or maintenance of the basic life-sustaining natural elements.

<If the application does not clearly disclose that the claimed invention materially enhances the quality of the environment by contributing to the restoration or maintenance of one of the basic life-sustaining natural elements, the petition must be accompanied by a statement signed by the applicant, assignee, or an attorney/agent registered to practice before the USPTO, in accordance with 37 CFR 1.33(b) explaining how the materiality standard is met. The materiality standard does not permit an applicant to speculate as to how a hypothetical end-user might specially apply the invention in a manner that could materially enhance the quality of the environment. Nor does such standard permit an applicant to enjoy the benefit of advanced examination merely because some minor aspect of the claimed invention may enhance the quality of the environment. See MPEP § 708.02 (item V). >

Applicant	:	Peter E. Rose
Appl. No.	:	12/544,553
Examiner	:	Not Yet Assigned
Docket No.	:	19660-4016

☒ *Applications Pertaining to Energy Conservation, Development of Renewable Energy Resources, or Greenhouse Gas Emission Reduction:* Special status is sought because the application is for an invention that materially contributes to:

☒ (1) The discovery or development of renewable energy resources;

☐ (2) the more efficient utilization and conservation of energy resources; or

☐ (3) the reduction of greenhouse gas emissions.

<If the application disclosure is not clear on its face that the claimed invention materially contributes to (1) development of renewable energy or energy conservation, or (2) greenhouse gas emission reduction, the petition must be accompanied by a statement signed by the appl
icant, assignee, or an attorney/agent registered to practice before the USPTO, in accordance with 37 CFR 1.33(b) explaining how the materiality standard is met. The materiality standard does not permit an applicant to speculate as to how a hypothetical end-user might specially apply the invention in a manner that could materially contribute to (1) development of renewable energy or energy conservation, or (2) greenhouse gas emission reduction, nor does the standard permit an applicant to enjoy the benefit of advanced examination merely because some minor aspect of the claimed invention may be directed to (1) development of renewable energy or energy conservation, or (2) greenhouse gas emission reduction. See MPEP § 708.02 (item VI). >

Applicant hereby certifies that:

1. The application contains three or fewer independent claims and twenty or fewer total claims. Additionally, application does not contain any multiple dependent claims. If application does contain more than three independent claims, twenty total claims and/or multiple dependent claims, a preliminary amendment is filed herewith.

2. The claims are directed to a single invention that materially enhances the quality of the environment, or that materially contributes to: (1) The discovery or development of renewable energy resources; (2) the more efficient utilization and conservation of energy resources; or (3) greenhouse gas emission reduction. If the USPTO determines that the claims are directed to multiple inventions (e.g., in a restriction requirement), applicant will agree to make an election without traverse in a telephonic interview, and elect an invention that meets the eligibility requirements and is classified in one of the U.S. classifications listed in section 2 of this petition.

3. No Office Action, including an Office Action containing only a restriction requirement, has been issued.

4. Applicant hereby requests early publication under 37 CFR 1.219 and the publication fee set forth in 37 CFR 1.18(d) accompanies this request. If applicable, Applicant hereby rescinds under 37 CFR 1.213(b) any previous filed request that the above-identified application not be published under 35 U.S.C. 122(b).

5. Fees. This Petition to Make Special is being submitted under the Green Technology Pilot Program, therefore no fees are required. However, if the undersigned is in error in this regard, the Commissioner is authorized to charge any fees to Orrick, Herrington & Sutcliffe's Deposit Account No. 15-0665.

Respectfully submitted,
ORRICK, HERRINGTON & SUTCLIFFE LLP

Dated: November 18, 2010

By: /s/ Sanjeet K. Dutta
Sanjeet K. Dutta
Reg. No. 46,145

Orrick, Herrington & Sutcliffe LLP
4 Park Plaza, Suite 1600
Irvine, CA 92614-2558
Tel. 650-614-7647
Fax: 650-614-7401

UNITED STATES PATENT AND TRADEMARK OFFICE

UNITED STATES DEPARTMENT OF COMMERCE
United States Patent and Trademark Office
Address: COMMISSIONER FOR PATENTS
P.O. Box 1450
Alexandria, Virginia 22313-1450
www.uspto.gov

APPLICATION NO.	FILING DATE	FIRST NAMED INVENTOR	ATTORNEY DOCKET NO.	CONFIRMATION NO.
12/544,553	08/20/2009	Peter E. Rose	19660-4016	9563

34313 7590 12/03/2010
ORRICK, HERRINGTON & SUTCLIFFE, LLP
IP PROSECUTION DEPARTMENT
4 PARK PLAZA
SUITE 1600
IRVINE, CA 92614-2558

EXAMINER
SUCHFIELD, GEORGE A

ART UNIT	PAPER NUMBER
3676	

MAIL DATE	DELIVERY MODE
12/03/2010	PAPER

Please find below and/or attached an Office communication concerning this application or proceeding.

The time period for reply, if any, is set in the attached communication.

UNITED STATES PATENT AND TRADEMARK OFFICE

Commissioner for Patents
United States Patent and Trademark Office
P.O. Box 1450
Alexandria, VA 22313-1450
www.uspto.gov

DEC -2 2010

ORRICK, HERRINGTON & SUTCLIFFE, LLP
IP PROSECUTION DEPARTMENT
4 PARK PLAZA
SUITE 1600
IRVINE CA 92614-2558

In re Application of	:
Peter E. ROSE et al.	: LETTER ACKNOWLEDGING
Application No. 12/544,553	: SUBMISSION BY APPLICANT
Filed: August 20, 2009	: UNDER THE GREEN
Attorney Docket No. 19660-4016	: TECHNOLOGY PILOT PROGRAM

The submission filed on November 18, 2010 has been received. The record shows that a first decision dismissing the initial petition to make the application special under the Green Technologies pilot program was mailed on February 23, 2010, and a second decision denying the renewed petition was mailed on July 9, 2010. The Notice regarding the Pilot Program for Green Technologies Including Greenhouse Gas Reduction as set forth in 74 Federal Register Notice 64666 (December 8, 2009) states that applicant "will be given only one opportunity to correct the deficiency"; Therefore, no further consideration will be made of this matter.

Telephone inquiries concerning this decision should be directed to Lanna Mai at 571-272-6867.

The application is being forwarded to the Technology Center Art Unit 3676 for action in its regular turn.

/Lanna Mai/

Lanna Mai
Quality Assurance Specialist
Technology Center 3600

UNITED STATES PATENT AND TRADEMARK OFFICE

Commissioner for Patents
United States Patent and Trademark Office
P.O. Box 1450Alexandria, VA 22313-1450
www.uspto.gov

BARNES & THORNBURG LLP
11 SOUTH MERIDIAN
INDIANAPOLIS IN 46204

MAILED

OCT 13 2010

OFFICE OF PETITIONS

In re Application of
Thomas J. Webster et al.
Application No. 12/544,575
Filed: August 20, 2009
Attorney Docket No. 3220-208176

:DECISION ACCORDING STATUS
: UNDER 37 CFR 1.47(a)

This decision is in response to the request for reconsideration under 37 CFR §1.47(a)[1] filed June 11, 2010.

The petition under 37 CFR 1.47(a) is **GRANTED.**

The above-identified application was filed with an unsigned oth or declaration. Accordingly, on September 8, 2009, a "Notice To File Missing Parts Of Nonprovisional Application" ("Notice To File Missing Parts") was mailed, requiring an executed oath or declaration in compliance with 37 CFR 1.63 and a surcharge for its late filing. In response, on February 23, 2010, a petition, four month extension of time request, and a declaration executed by joint inventor Thomas J. Webster but not by joint inventor Venu Perla was filed. Petitioner claimed that despite applicant' s diligent efforts, they had not been able to locate inventor Venu Perla to obtain his signature on the Declaration under 37 CFR 1.63.

The petition was dismissed in a decision mailed April 23, 2010 because the petition lacked compliance with 37 CFR 1.47(a)(1).

Comes now petitioner with a renewed petition.

---

[1]A grantable petition under 37 CFR 1.47(a) requires:

(1) proof that the non-signing inventor cannot be reached or located, notwithstanding diligent effort, or refuses to sign the oath or declaration after having been presented with the application papers (specification, claims and drawings);

(2) an acceptable oath or declaration in compliance with 35 U.S.C. §§ 115 and 116;

(3) the petition fee;

(4) a statement of the last known address of the non-signing inventor.

In response to the decision dismissing the petition filed February 23, 2010, the request for reconsideration bears proof that efforts were undertaken to locate the non-signing inventor but those efforts were unsuccessful. The evidence is therefore sufficient to establish diligence as required by the regulation.

As provided in Rule 1.47(c), this Office will forward notice of this application's filing to the non-signing inventor at the address given in the petition. Notice of the filing of this application will also be published in the Official Gazette.

This matter is being referred to the Office of Patent Application Processing for further pre-examination processing.

Telephone inquiries concerning this matter may be directed to the undersigned Petitions Attorney at (571) 272-3212.

Patricia Faison-Ball

Patricia Faison-Ball
Senior Petitions Attorney
Office of Petitions

UNITED STATES PATENT AND TRADEMARK OFFICE

Commissioner for Patents
United States Patent and Trademark Office
P.O. Box 1450
Alexandria, VA 22313-1450
www.uspto.gov

PANDUIT CORP.
LEGAL DEPARTMENT
6200 W. 175TH STREET
TINLEY PARK, IL 60477

MAILED
AUG 18 2011
OFFICE OF PETITIONS

In re Application of	:	
Frank Straka, et al.	:	
Application No. 12/544,626	:	DECISION GRANTING PETITION
Filed: August 20, 2009	:	UNDER 37 CFR 1.313(c)(2)
Attorney No. LBC650	:	

This is a decision on the renewed petition under 37 CFR 1.313(c)(2), filed August 16, 2011, to withdraw the above-identified application from issue after payment of the issue fee.

The petition is **GRANTED**.

The above-identified application is withdrawn from issue for consideration of a submission under 37 CFR 1.114 (request for continued examination). *See* 37 CFR 1.313(c)(2).

Petitioner is advised that the issue fee paid on July 18, 2011 cannot be refunded. If, however, this application is again allowed, petitioner may request that it be applied towards the issue fee required by the new Notice of Allowance.[1]

Telephone inquiries regarding this decision should be directed to undersigned at (571) 272-1642. All other inquiries concerning the examination or status of this application should be directed to the Technology Center.

This application is being referred to Technology Center AU 2833 for processing of the request for continued examination under 37 CFR 1.114 and for consideration of the concurrently filed amendment and information disclosure statement.

/AMW/
April M. Wise
Petitions Examiner
Office of Petitions

[1] *The request to apply the issue fee to the new Notice may be satisfied by completing and returning the new Part B – Fee(s) Transmittal Form (along with any balance due at the time of submission). Petitioner is advised that the Issue Fee Transmittal Form must be completed and timely submitted to avoid abandonment of the application.*

UNITED STATES PATENT AND TRADEMARK OFFICE

UNITED STATES DEPARTMENT OF COMMERCE
United States Patent and Trademark Office
Address: COMMISSIONER FOR PATENTS
P.O. Box 1450
Alexandria, Virginia 22313-1450
www.uspto.gov

APPLICATION NO.	FILING DATE	FIRST NAMED INVENTOR	ATTORNEY DOCKET NO.	CONFIRMATION NO.
12/544,653	08/20/2009	Kazuchika TASHIMA	347276US26	9759

22850 7590 12/16/2010
OBLON, SPIVAK, MCCLELLAND MAIER & NEUSTADT, L.L.P.
1940 DUKE STREET
ALEXANDRIA, VA 22314

EXAMINER
KWON, JOHN

ART UNIT	PAPER NUMBER
3747	

NOTIFICATION DATE	DELIVERY MODE
12/16/2010	ELECTRONIC

Please find below and/or attached an Office communication concerning this application or proceeding.

The time period for reply, if any, is set in the attached communication.

Notice of the Office communication was sent electronically on above-indicated "Notification Date" to the following e-mail address(es):

patentdocket@oblon.com
oblonpat@oblon.com
jgardner@oblon.com

UNITED STATES PATENT AND TRADEMARK OFFICE

Commissioner for Patents
United States Patent and Trademark Office
P.O. Box 1450
Alexandria, VA 22313-1450
www.uspto.gov

OBLON, SPIVAK, MCCLELLAND MAIER & NEUSTADT, L.L.P.
1940 DUKE STREET
ALEXANDRIA VA 22314

In re Application of	:	
TASHIMA, KAZUCHIKA et al	:	DECISION ON REQUEST TO
Application No. 12/544,653	:	PARTICIPATE IN PATENT
Filed: August 20, 2009	:	PCT/PROSECUTION HIGHWAY
Attorney Docket No. 347276US26	:	PROGRAM AND PETITION
Title: FUEL INJECTION CONTROL APPARATUS FOR INTERNAL COMBUSTION ENGINE	:	37 CFR 1.102(a)

This is a decision on the request to participate in the Patent Prosecution Highway (PPH) program and the petition under 37 CFR 1.102(a), filed December 14, 2010, to make the above-identified application special.

The request and petition are granted.

A grantable request to participate in the PPH program and petition to make special require:
(1) The U.S. application must disclose an eligible relationship to one or more PCT applications filed in the KIPO, JPO, EPO or USPTO;
(2) Applicant must submit a copy of the allowable/patentable claim(s) from the PCT application(s) latest international work product (the written opinion or the IPER) along with an English translation thereof and a statement that the English translation is accurate;
(3) All the claims in the U.S. application must sufficiently correspond or be amended to sufficiently correspond to the allowable/patentable claim(s) in the PCT application(s);
(4) Examination of the U.S. application has not begun;
(5) Applicant must submit a copy of the latest international work product from the PCT application containing the allowable/patentable claim(s) along with an English translation thereof and a statement that the English translation is accurate; and
(6) Applicant must submit an IDS listing the documents cited by the PCT examiner in the international work product along with copies of documents except U.S. patents or U.S. patent application publications.

In light of the petition being properly submitted, the request to participate in the PPH program and the petition comply with the above requirements. Accordingly, the above-identified application has been accorded "special" status.

The applicant is encouraged to cite and submit all relevant prior art references, if any, to facilitate examination in this application. This application will be forwarded to an examiner for examination.

Telephone inquiries concerning this decision should be directed to Henry C. Yuen at 571-272-4856. All other inquiries concerning the examination or status of the application should be directed to Steven Cronin, SPE of Art Unit 3747, and 571-272-4536 for Class 701/103 and also accessible in the PAIR system at http://www.uspto.gov/ebc.index.html.

Petition is **granted**.

/Henry C. Yuen/

Henry C. Yuen, Special Programs Examiner
Technology Center 3700 – Mechanical Engineering,
Manufacturing and Products
571-272-4856

UNITED STATES PATENT AND TRADEMARK OFFICE

Commissioner for Patents
United States Patent and Trademark Office
P.O. Box 1450
Alexandria, VA 22313-1450
www.uspto.gov

GREER, BURNS & CRAIN, LTD.
300 SOUTH WACKER DRIVE
SUITE 2500
CHICAGO IL 60603

MAILED

SEP 27 2010

OFFICE OF PETITIONS

In re Application of
Li et al.
Application No. 12/544,707
Filed: 20 August, 2009
Attorney Docket No. 4031/2033.78519

DECISION ON PETITION

This is a decision on the petition filed on 24 September, 2010, pursuant to37 C.F.R. §1.47.

The petition pursuant to 37 C.F.R. §1.47(a) is **DISMISSED**.

A grantable petition pursuant to 37 C.F.R. §1.47(a) requires: (1) petition and fee; (2) proof that the non-signing inventor cannot be reached or refuses to sign the oath or declaration after having been presented with the application papers (specification: description, claims and drawings); (3) an acceptable oath or declaration in compliance with 35 U.S.C. §§ 115 and 116; and (4) a statement of the last known address of the non-signing inventor(s)—with diligence in the effort to ascertain the validity of the address set forth as the reasonably believed to be last known/current/valid address.

Petitioners always are reminded that for transmission by Email of any document to be accepted by the Office, written acknowledgment of receipt and readability will be required.

BACKGROUND

The record reflects as follows:

The application was deposited on 20 August, 2009, without, *inter alia*, a fully executed oath/declaration

On 9 September, 2009, the Office mailed a Notice of Missing Parts requiring, *inter alia*, a fully executed oath/declaration.

On 23 September, 2009, Petitioner Christopher S. Hermanson (Reg. No. 48,244) filed, *inter alia*, a petition (with fee) pursuant to 37 C.F.R. §1.47, with an oath/declaration executed by co-inventor Mr. Li for himself and on behalf of Kristen McKeever (Ms. McKeever), averred to be the non-signing legal representative of deceased co-inventor Arthur Kennedy (Mr. Kennedy), with a statement as to the current/valid/reasonably believed to be last known address for Ms. McKeever. There is no indication as to the basis for the conclusion that Ms. McKeever is the legal representative (e.g., a filing bearing such an averment in a court of competent jurisdiction). The supporting documentation (*inter alia*, the "Statement of Facts" is un-attributed and unsigned. The transmittal to Ms, McKeever of the packet averred to contain the entire application (description, claims, abstract and drawings) appears to have been left at an address without a signed or other acknowledged receipt—the courier form appears to have been executed to authorize such delivery. There are statements as to conversations, but without the acknowledgement and averment of such by any party thereto. The petition was dismissed on 7 December, 2009.

On 7 May, 2010, Petitioner re-advanced the petition pursuant to 37 C.F.R. §1.47, with, *inter alia*, an averment that the death certificate for the deceased inventor was attached as Exhibit A, with an inference that document would support the identification of Ms. McKeever as the proper legal representative herein. (If the death certificate is not the proper document to support in evidence that averment, Petitioner needed to identify and include that document). Thus, the materials were incomplete as to the showing; the petition was dismissed on 16 June, 2010.

On 24 September, 2010, Petitioner re-advanced the petition pursuant to 37 C.F.R. §1.47, with, *inter alia*, a request and fee for extension of time, and an averment that the legal representative of the non-signing inventor had signed/joined in the oath/declaration, and with what are averred to be true copies of documents evidencing her status as legal representative and of the executed oath/declaration in support of the averment(s).

The availability of applications and application papers online to applicants/practitioners who diligently associate their Customer Number with the respective application(s) now provides an applicant/practitioner on-demand information as to events/transactions in an application. Thus, now if one wishes to know the progress in and/or status of an application or the accuracy of the data therein, one need only look at the file online.

Out of an abundance of caution, Petitioners always are reminded that those registered to practice *and* all others who make representations before the Office must inquire into the underlying facts of representations made to the Office and support averments with the appropriate documentation–since all owe to the Office the continuing duty to disclose.[1]

---

[1] See supplement of 17 June, 1999. The Patent and Trademark Office is relying on petitioner's duty of candor and good faith and accepting a statement made by Petitioner. See Changes to Patent Practice and Procedure, 62 Fed. Reg. at 53160 and 53178, 1203 Off. Gaz. Pat. Office at 88 and 103 (responses to comments 64 and 109)(applicant obligated under 37 C.F.R. §10.18 to inquire into the underlying facts and circumstances when providing statements to the Patent and Trademark Office). See specifically, the regulations at 37 C.F.R. §10.18.

CONCLUSION

The instant petition under 37 C.F.R. §1.47 is **dismissed as moot for joinder**.

In view of the joinder of the inventor/legal representative thereof, further consideration under 37 C.F.R. §1.47 is not necessary. This application does not have any Rule 1.47 status and no such status should appear on the record for this file. This application should not be returned to this Office for any further consideration under 37 C.F.R. §1.47.

The instant application is released to the Office of Patent Application Processing (OPAP) for further processing in due course.

While telephone inquiries regarding this decision may be directed to the undersigned at (571) 272-3214—it is noted, however, that all practice before the Office is in writing (see: 37 C.F.R. §1.2[2]) and the proper authority for action on any matter in this regard are the statutes (35 U.S.C.), regulations (37 C.F.R.) and the commentary on policy (MPEP). Therefore, no telephone discussion may be controlling or considered authority for Petitioner's action(s).

/John J. Gillon, Jr./
John J. Gillon, Jr.
Senior Attorney
Office of Petitions

[2] The regulations at 37 C.F.R. §1.2 provide:
§1.2 Business to be transacted in writing.
All business with the Patent and Trademark Office should be transacted in writing. The personal attendance of applicants or their attorneys or agents at the Patent and Trademark Office is unnecessary. The action of the Patent and Trademark Office will be based exclusively on the written record in the Office. No attention will be paid to any alleged oral promise, stipulation, or understanding in relation to which there is disagreement or doubt.

UNITED STATES PATENT AND TRADEMARK OFFICE

Commissioner for Patents
United States Patent and Trademark Office
P.O. Box 1450
Alexandria, VA 22313-1450
www.uspto.gov

Cesari & Reed, L.L.P.
P.O. Box 9669
Austin, TX 78766

MAILED

MAR 14 2012

OFFICE OF PETITIONS

In re Application of	:	
Tyron Stading, et. al.	:	
Application No. 12/544,738	:	DECISION ON PETITION
Filed: August 20, 2009	:	TO WITHDRAW FROM
Attorney Docket No. 3025.009as1	:	RECORD

This is a decision on the Request to Withdraw as attorney or agent of record under 37 CFR §§ 1.36(b) or 10.40, filed February 6, 2012.

The request is **MOOT**.

A review of the file record indicates that any previous power of attorney was revoked by the assignee of the above application on February 23, 2012. Accordingly, the request to withdraw under 37 CFR §§ 1.36(b) or 10.40 is unnecessary.

All future communications from the Office will be directed to the new address of record unless otherwise instructed.

There is an outstanding Office action mailed on February 2, 2012, that requires a reply.

Telephone inquires concerning this decision should be directed to the undersigned at (571) 272-3226.

/Andrea Smith/
Andrea Smith
Petitions Examiner
Office of Petitions

UNITED STATES PATENT AND TRADEMARK OFFICE

UNITED STATES DEPARTMENT OF COMMERCE
United States Patent and Trademark Office
Address: COMMISSIONER FOR PATENTS
P.O. Box 1450
Alexandria, Virginia 22313-1450
www.uspto.gov

APPLICATION NO.	FILING DATE	FIRST NAMED INVENTOR	ATTORNEY DOCKET NO.	CONFIRMATION NO.
12/544,814	08/20/2009	Dennis L. Schultze	1423-141	1076

32905 7590 11/16/2011
JONDLE & ASSOCIATES, P.C.
858 HAPPY CANYON ROAD, SUITE 230
CASTLE ROCK, CO 80108

EXAMINER
WORLEY, CATHY KINGDON

ART UNIT	PAPER NUMBER
1638	

NOTIFICATION DATE	DELIVERY MODE
11/16/2011	ELECTRONIC

Please find below and/or attached an Office communication concerning this application or proceeding.

The time period for reply, if any, is set in the attached communication.

Notice of the Office communication was sent electronically on above-indicated "Notification Date" to the following e-mail address(es):

JondleOA@jondlelaw.com

UNITED STATES PATENT AND TRADEMARK OFFICE

Commissioner for Patents
United States Patent and Trademark Office
P.O. Box 1450
Alexandria, VA 22313-1450
www.uspto.gov

NOV 1 6 2011

JONDLE & ASSOCIATES P.C.
858 HAPPY CANYON ROAD SUITE 230
CASTLE ROCK CO 80108

In re Application of:	:
William H. Eby	:
Serial No.: 12/544,814	: PETITION DECISION
Filed: August 20, 2009	:
Attorney Docket No.: **1421-141**	

This is in response to the petition under 37 CFR § 1.59(b), filed November 4, 2011, to expunge information from the above identified application. This application has not been allowed.

Petitioner requests that the Reply to Request for Information under 37 CFR 1.105, and attachment thereto, submitted to the Patent Office on November 4, 2011, be expunged from the record. Petitioner states either: (A) that the information contains trade secret material, proprietary material and/or material that is subject to a protective order which has not been made public; or (B) that the information submitted was unintentionally submitted and the failure to obtain its return would cause irreparable harm to the party who submitted the information or to the party in interest on whose behalf the information was submitted, and the information has not otherwise been made public. The petition fee set forth in 37 CFR § 1.17(g) has been paid.

This is an examined application which is currently under non-final rejection. As such the information provided has been reviewed, in part, but proceedings in the application have not been terminated. As stated in M.P.E.P. 724, upon allowance or other action closing prosecution in an application, petition may be made for return of Proprietary information. The information cannot be expunged at this time.

The petition is **DISMISSED**. Petitioner may resubmit the petition subsequent to a Notice of Allowability or *ex parte Quayle* action being mailed in the application. No additional petition fee will be required at that time.

Should there be any questions about this decision please contact Marianne C. Seidel by letter addressed to Director, TC 1600, at the address listed above, or by telephone at 571-272-0584 or by facsimile sent to the general Office facsimile number, 571-273-8300.

/MC Seidel/
Marianne C. Seidel, Quality Assurance Specialist
Technology Center 1600

UNITED STATES PATENT AND TRADEMARK OFFICE

Commissioner for Patents
United States Patent and Trademark Office
P.O. Box 1450
Alexandria, VA 22313-1450
www.uspto.gov

Decision Date : December 2, 2011

In re Application of :

Dennis Schultze

Application No : 12544814

Filed : 20-Aug-2009

Attorney Docket No : 1423-141

DECISION ON REQUEST TO WITHDRAW AS ATTORNEY/AGENTOF RECORD

This is an electronic decision on the Request to Withdraw as attorney or agent of record under 37 CFR§ 1.36(b), filed December 2, 2011

The request is **APPROVED**

The request was signed by Robert J. Jondle (registration no. 33915) on behalf of all attorneys/agents associated with Customer Number 32905 . All attorneys/agents associated with Customer Number 32905 have been withdrawn.

Since there are no remaining attorneys of record, all future communications from the Office will be directed to the first named inventor or assignee that has properly made itself of record pursuant to 37 CFR 3.71, with Customer number 26263 .

As a reminder, requester is required to inform the first named inventor or assignee that has properly made itself of record pursuant to 37 CFR 3.71 of the electronically processed petition.

Telephone inquiries concerning this decision should be directed to the Patent Electronic Business Center (EBC) at 866-217-9197.

Office of Petitions

Doc Code: PET.AUTO **Document Description: Petition automatically granted by EFS-Web**	PTO/SB/83 U.S. Patent and Trademark Office Department of Commerce

Electronic Petition Request	**REQUEST FOR WITHDRAWAL AS ATTORNEY OR AGENT AND CHANGE OF CORRESPONDENCE ADDRESS**
Application Number	12544814
Filing Date	20-Aug-2009
First Named Inventor	Dennis Schultze
Art Unit	1638
Examiner Name	CATHY WORLEY
Attorney Docket Number	1423-141
Title	Soybean Cultivar 8235453

◉ Please withdraw me as attorney or agent for the above identified patent application and the practitioners of record associated with Customer Number: 32905

The reason(s) for this request are those described in 37 CFR:

10.40(b)(4)

Certifications

☒ I/We have given reasonable notice to the client, prior to the expiration of the response period, that the practitioner(s) intend to withdraw from employment

☒ I/We have delivered to the client or a duly authorized representative of the client all papers and property (including funds) to which the client is entitled

☒ I/We have notified the client of any responses that may be due and the time frame within which the client must respond

Change the correspondence address and direct all future correspondence to:
The address of the first named inventor or assignee that has properly made itself of record pursuant to 37 CFR 3.71, associated with Customer Number: 26263

I am authorized to sign on behalf of myself and all withdrawing practitioners.

Signature	/Robert J. Jondle/
Name	Robert J. Jondle
Registration Number	33915

UNITED STATES PATENT AND TRADEMARK OFFICE

UNITED STATES DEPARTMENT OF COMMERCE
United States Patent and Trademark Office
Address: COMMISSIONER FOR PATENTS
P.O. Box 1450
Alexandria, Virginia 22313-1450
www.uspto.gov

APPLICATION NO.	FILING DATE	FIRST NAMED INVENTOR	ATTORNEY DOCKET NO.	CONFIRMATION NO.
12/544,839	08/20/2009	Tomoaki UEDA	091619-0305	1121

23524 7590 01/31/2011
FOLEY & LARDNER LLP
150 EAST GILMAN STREET
P.O. BOX 1497
MADISON, WI 53701-1497

EXAMINER
DOTE, JANIS L

ART UNIT	PAPER NUMBER
1721	

MAIL DATE	DELIVERY MODE
01/31/2011	PAPER

Please find below and/or attached an Office communication concerning this application or proceeding.

The time period for reply, if any, is set in the attached communication.

UNITED STATES PATENT AND TRADEMARK OFFICE

Commissioner for Patents
United States Patent and Trademark Office
P.O. Box 1450
Alexandria, VA 22313-1450
www.uspto.gov

January 31, 2011 BC

In re application of	:	DECISION ON REQUEST TO
Tomoaki Ueda et al.	:	PARTICIPATE IN PATENT
Serial No. 12/544,839	:	PROSECUTION HIGHWAY
Filed: August 20, 2009	:	PROGRAM AND
For: METHOD FOR PRODUCING TONER	:	PETITION TO MAKE SPECIAL
	:	UNDER 37 CFR 1.102(a)

This is a decision on the request to participate in the Patent Prosecution Highway (PPH) program and the petition under 37 CFR 1.102(a) to make the above-identified application special filed December 29, 2010.

The request and petition are **GRANTED**.

A grantable request to participate in the PPH program and petition to make special require:

(1) The U.S. application must validly claim priority under 35 U.S.C. 119(a) to one or more applications filed in the JPO, note where the JPO application with similar claims is not the same application from which the U.S. application claims priority that the applicant must identify the relationship between the JPO application with similar claims and the JPO priority application;

(2) Applicant must submit a copy of:
   a. The allowable/patentable claim(s) from the JPO application(s) or if a copy of the allowable/patentable claims is available via the Dossier Access System (DAS) applicant may request the USPTO to obtain a copy from DAS; however, if the USPTO is unable to obtain a copy from the DAS, the applicant will be required to submit a copy;
   b. An English translation of the allowable/ patentable claim(s), if applicable; and
   c. A statement that the English translation is accurate, if applicable;

(3) Applicant must:
   a. Ensure all the independent claims in the U.S. application must sufficiently correspond or be amended to sufficiently correspond to the allowable/patentable claim(s) in the JPO application(s); and
   b. Submit a claims correspondence table in English;

(4) Examination of the U.S. application has not begun;

(5) Applicant must submit:
   a. Documentation of prior office action:

i. a copy of the office action(s) just prior to the "Decision to Grant a Patent" from each of the JPO application(s) containing the allowable/patentable claims(s) or
ii. if the allowable/patentable claim(s) are from "Notification of Reasons for Refusal" then the Notification of Reasons for Refusal or
iii. if the JPO application is a first action allowance then no office action from the JPO is necessary should be indicated on the request/petition form;
Further, if a copy of the documents from (i) or (ii) is available via the Dossier Access System (DAS), applicant may request the USPO obtain a copy from the DAS; however, if the USPTO is unable to obtain a copy of the DAS, the applicant will be required to submit a copy; and

b. An English language translation of the JPO Office action from (5)(a)(i)-(ii) above if applicable; and

(6) Applicant must submit:

a. An IDS listing the documents cited by the JPO examiner in the JPO office action (unless already submitted in this application)
b. Copies of documents except U.S. patents or U.S. patent application publications (unless already submitted in this application).

The request to participate in the PPH program and petition comply with the above requirements. Accordingly, the above-identified application has been accorded "special" status.

The application is being forwarded to the examiner for action on the merits commensurate with this decision.

Any inquiry regarding this decision should be directed to Blaine Copenheaver, Quality Assurance Specialist, at (571) 272-1156.

All other inquiries concerning the examination or status of the application is accessible in the PAIR system at http://www.uspto.gov/ebc/index.html.

/Blaine Copenheaver/

Blaine Copenheaver
Quality Assurance Specialist
Technology Center 1700

UNITED STATES PATENT AND TRADEMARK OFFICE

Commissioner for Patents
United States Patent and Trademark Office
P.O. Box 1450
Alexandria, VA 22313-1450
www.uspto.gov

INNOVATION COUNSEL LLP
21771 STEVENS CREEK BLVD.
STE. 200A
CUPERTINO CA 95014

MAILED
APR 19 2011
OFFICE OF PETITIONS

In re Application of	:	
Hyun-Wuk Kim et al	:	
Application No. 12/544,871	:	DECISION GRANTING PETITION
Filed: August 20, 2009	:	UNDER 37 CFR 1.313(c)(2)
Attorney Docket No. PANK01470-1C US	:	

This is a decision on the petition under 37 CFR 1.313(c)(2), filed April 18, 2011, to withdraw the above-identified application from issue after payment of the issue fee.

The petition is **GRANTED**.

The above-identified application is withdrawn from issue for consideration of a submission under 37 CFR 1.114 (request for continued examination). *See* 37 CFR 1.313(c)(2).

Petitioner is advised that the issue fee paid on March 16, 2011 cannot be refunded. If, however, this application is again allowed, petitioner may request that it be applied towards the issue fee required by the new Notice of Allowance.[1]

Telephone inquiries should be directed to the undersigned at (571) 272-3208.

This application is being referred to Technology Center AU 2871 for processing of the request for continued examination under 37 CFR 1.114 and for consideration of the concurrently filed IDS.

/Karen Creasy/
Karen Creasy
Petitions Examiner
Office of Petitions

---

[1] *The request to apply the issue fee to the new Notice may be satisfied by completing and returning the new Part B – Fee(s) Transmittal Form (along with any balance due at the time of submission). Petitioner is advised that the Issue Fee Transmittal Form must be completed and timely submitted to avoid abandonment of the application.*

UNITED STATES PATENT AND TRADEMARK OFFICE

Commissioner for Patents
United States Patent and Trademark Office
P.O. Box 1450
Alexandria, VA 22313-1450
www.uspto.gov

ROBERT J. KAPALKA
TYCO TECHNOLOGY RESOURCES
4550 NEW LINDEN HILL ROAD
SUITE 140
WILMINGTON, DE 19808

MAILED

JAN 12 2011

OFFICE OF PETITIONS

In re Application of
Christopher Scott Hertzler, et al.
Application No. 12/544,875
Filed: August 20, 2009
Attorney Docket No. GI-00656 (958-4029)

DECISION GRANTING PETITION
UNDER 37 CFR 1.313(c)(2)

This is a decision on the petition under 37 CFR 1.313(c)(2), filed January 7, 2011, to withdraw the above-identified application from issue after payment of the issue fee.

The petition is **GRANTED**.

The above-identified application is withdrawn from issue for consideration of a submission under 37 CFR 1.114 (request for continued examination). *See* 37 CFR 1.313(c)(2).

Petitioner is advised that the issue fee paid on December 6, 2010 cannot be refunded. If, however, this application is again allowed, petitioner may request that it be applied towards the issue fee required by the new Notice of Allowance.[1]

Telephone inquiries regarding this decision should be directed to undersigned at (571) 272-1642. All other inquiries concerning the examination or status of this application should be directed to the Technology Center.

This application is being referred to Technology Center AU 2839 for processing of the request for continued examination under 37 CFR 1.114 and for consideration of the concurrently filed information disclosure statement.

/AMW/
April M. Wise
Petitions Examiner
Office of Petitions

[1] *The request to apply the issue fee to the new Notice may be satisfied by completing and returning the new Part B – Fee(s) Transmittal Form (along with any balance due at the time of submission). Petitioner is advised that the Issue Fee Transmittal Form* ***must*** *be completed and timely submitted to avoid abandonment of the application.*

UNITED STATES PATENT AND TRADEMARK OFFICE

Commissioner for Patents
United States Patent and Trademark Office
P.O. Box 1450
Alexandria, VA 22313-1450
www.uspto.gov

MAYER & WILLIAMS PC
251 NORTH AVENUE WEST
2ND FLOOR
WESTFIELD NJ 07090

MAILED

SEP 07 2010

OFFICE OF PETITIONS

In re Application of
F. Anthony Headley, Jr., et al
Application No. 12/544,876
Filed: August 20, 2009
Attorney Docket No. 04-0091US2

DECISION ON PETITION

This is a decision on the petition under 37 CFR 1.181 (no fee), filed August 6, 2010, requesting refund of the filing fee for the above-identified application.

The petition is **DISMISSED**.

Petitioner asserts that the instant application was an unintended duplicate filing via EFS-Web.

37 CFR 1.26(a) states, in part: "The Director may refund any fee paid by mistake or in excess of that required. A change of purpose after the payment of a fee, such as when a party desires to withdraw a patent filing for which the fee was paid, including an application, an appeal, or a request for an oral hearing, will not entitle a party to a refund of such fee."

However, the Office may find a mistake pursuant to 37 CFR 1.26, waive the presumption in 37 CFR 1.26 that applications are not entitled to filing fee refunds, and refund the filing fees associated with unintended duplicate application filings via EFS-Web when the following conditions have been met:

(1) Applicant must certify that they had filed the duplicate application(s) prior to receiving appropriate confirmation from the Office that the initial application filing via EFS-Web was received by the Office;

(2) the request for a refund must be filed within three months from the filing date of the first application receiving an appropriate acknowledgement;

(3) the request must include a statement which attests on a personal knowledge basis or to the satisfaction of the Director that the duplicate application was intended to be the original application;

(4) the duplicate application must have been filed via EFS-Web on or after March 16, 2006;

(5) the request must list the other application(s) of which the instant application is deemed to be a "duplicate"; and

(6) the request should include a statement of express abandonment of the instant application as it was filed in error.

When the above conditions have been met, the Office will generally accept the statement as an assertion that the duplicate application was filed by mistake without requiring further information.

The instant petition lacks items (2) and (6) above.

Accordingly, the petition for refund of a duplicate filing fee under 37 CFR 1.181 cannot be granted at this time.

As an alternative, petitioner may wish to file a declaration of express abandonment of the instant application pursuant to 37 CFR 1.138(d) to obtain a refund of the search and excess claims fees. A copy of form PTO/SB/24B is provided for petitioner's convenience. Petitioner is advised to file the declaration without delay as the express abandonment can only be processed before an examination has been made of the application. Thereafter, petitioner cannot obtain a refund of such fees except as provided in 37 CFR 1.26.

Further correspondence with respect to this matter should be delivered through one of the following mediums:

By mail: Mail Stop PETITIONS
Commissioner for Patents
Post Office Box 1450
Alexandria, VA 22313-1450

By hand: Customer Service Window
Mail Stop Petitions
Randolph Building
401 Dulany Street
Alexandria, VA 22314

By fax: (571) 273-8300
ATTN: Office of Petitions

By internet: EFS-Web
www.uspto.gov/ebc/efs_help.html
(for help using EFS-Web call the
Patent Electronic Business Center
at (866) 217-9197)

Any questions concerning this matter may be directed to the undersigned at (571) 272-3208.

/KOC/
Karen Creasy
Petitions Examiner
Office of Petitions

enclosure: PTO/SB/24B

UNITED STATES PATENT AND TRADEMARK OFFICE

Commissioner for Patents
United States Patent and Trademark Office
P.O. Box 1450
Alexandria, VA 22313-1450
www.uspto.gov

MAHENDRA NAGINDAS MEHTA
6921 SPRING VALLEY WAY
FORT WORTH, TX 76132

MAILED
AUG 15 2011
OFFICE OF PETITIONS

Applicant: Mahendra Mehta
Appl. No.: 12/544,913
Filing Date: August 20, 2009
Title: A POWER OPERATED UNINAL APPARATUS FOR A COMMODE
Attorney Docket: NONE
Pub. No.: US 2010/0223720 A1
Pub. Date: September 9, 2010

This is a decision on the request for a corrected patent application publication under 37 CFR 1.221(b), received on November 5, 2010, for the above-identified application.

The request is DISMISSED.

Applicant requests that the application be republished because the patent application publication contains a material mistake in the claims, where the incorrect set was published.

37 CFR 1.221 (b) is applicable "only when the Office makes a **material mistake** which is apparent from Office records.... Any request for a corrected publication or revised patent application publication other than provided as provided in paragraph (a) of this section must be filed within two months from the date of the patent application publication. This period is not extendable". A material mistake must affect the public's ability to appreciate the technical disclosure of the patent application publication, to determine the scope of the patent application publication, or to determine the scope of the provisional rights that an applicant may seek to enforce upon issuance of a patent. [1]

37 C.F.R. 1.215(a) states that the patent application publication may also be based upon amendments to the specification (other than the abstract or the claims) that are reflected in a substitute specification under § 1.125(b), amendments to the abstract under § 1.121(b), amendments to the claims that are reflected in a complete claim listing under § 1.121(c), and amendments to the drawings under §1.121(d), provided that such substitute specification or amendment is submitted in sufficient time to be entered into the Office file wrapper of the application before technical preparations for publication of the application have begun. (emphasis added) 37 CFR 1.215(c) states that applicant may file an amended copy of the application for publication purposes, but such amendments, including a substitute specification,

[1] Changes to Implement Eighteen-Month Publication of Patent Applications, 65 FR 57023, 57038 (Sept. 20, 2000), 1239, Off. Gaz. Pat. Office Notices 63, 75 (Oct. 10, 2000) (final rule).

must be submitted in compliance with the Office electronic filing system requirements, and within one month of the mailing date of the first Office communication that includes a confirmation number for the application, or fourteen months of the earliest filing date for which a benefit is sought under title 35, United States Code, whichever is later.

The error noted by requestor wherein the incorrect set of claims was published in this case is not an Office error. The claims were printed as they appear in the first set of claims submitted by applicant on June 11, 2010. The second set of claims submitted on June 11, 2010 is improper because it does not show the proper changes made to the claims.

The applicant is advised that a "request for republication of an application previously published" may be filed under 37 CFR 1.221(a). Such a request for republication "must include a copy of the application compliance with the Office's electronic filing system requirements and be accompanied by the publication fee set forth in § 1.18(d) and the processing fee set forth in § 1.17(i)." If the request for republication does not comply with the electronic filing system requirements, the republication will not take place and the publication fee set forth in § 1.18(d) will be refunded. The processing fee will be retained.

A guide for filing a request for a Pre-Grant Publication, such as a request for republication, may be found on the link below:

http://www.uspto.gov/patents/process/file/efs/guidance/index.jsp

http://www.uspto.gov/ebc/portal/efs/pgpub_quickstart.pdf

Any request for republication under 37 CFR 1.221(a), must be submitted via the EFS system, as a "Pre-Grant Publication" and questions or request for reconsideration of the decision, should be addressed as follows:

By mail to: Mail Stop PGPUB
Commissioner for Patents
P.O. Box 1450
Alexandria, Va. 22313-1450

Inquiries relating to this matter may be directed to Mark Polutta at (571) 272-7709.

Mark Polutta
Senior Legal Advisor
Office of Patent Legal Administration
Office of the Deputy Commissioner
for Patent Examination Policy

SPE RESPONSE FOR CERTIFICATE OF CORRECTION

DATE : 02/13/12

TO SPE OF : ART UNIT 3695

SUBJECT : Request for Certificate of Correction for Appl. No.: 12544919 Patent No.: 8051007

CofC mailroom date: 01/17/12

Please respond to this request for a certificate of correction within 7 days.

FOR IFW FILES:

Please review the requested changes/corrections as shown in the **COCIN** document(s) in the IFW application image. No new matter should be introduced, nor should the scope or meaning of the claims be changed.

Please complete the response (see below) and forward the completed response to scanning using document code **COCX**.

FOR PAPER FILES:

Please review the requested changes/corrections as shown in the attached certificate of correction. Please complete this form (see below) and forward it with the file to:

Certificates of Correction Branch (CofC)
Randolph Square – 9D10-A
Palm Location 7580
You can fax the Directors/SPE response to 571-273-3421

Note: **Should the changes be made?**

Lamonte Newsome

Certificates of Correction Branch

571-272-3421

Thank You For Your Assistance

The request for issuing the above-identified correction(s) is hereby:
Note your decision on the appropriate box.

PAGE 1/2 * RCVD AT 2/27/2012 9:33:31 AM [Eastern Standard Time] * SVR:W-PTOFAX-003/16 * DNIS:2733421 * CSID: * DURATION (mm-ss):00-50

12544919

SPE RESPONSE FOR CERTIFICATE OF CORRECTION

☑ **Approved** — **All** changes apply.

☐ **Approved in Part** — Specify below which changes **do not** apply.

☐ **Denied** — State the reasons for denial below.

Comments: _____

Charles R. Kyle — 3695

SPE — **Art Unit**

PAGE 2/2 * RCVD AT 2/27/2012 9:33:31 AM [Eastern Standard Time] * SVR:W-PTOFAX-003/16 * DNIS:2733421 * CSID: * DURATION (mm-ss):00-50

UNITED STATES PATENT AND TRADEMARK OFFICE

Commissioner for Patents
United States Patent and Trademark Office
P.O. Box 1450
Alexandria, VA 22313-1450
www.uspto.gov

VIERRA MAGEN MARCUS & DENIRO, LLP
575 MARKET STREET, SUITE 2500
SAN FRANCISCO, CA 94105

MAILED

FEB 15 2012

OFFICE OF PETITIONS

In re Application of :
John R. JACKLICH et al :
Application No. 12/544,996 : DECISION ON PETITION
Filed: August 20, 2009 :
Attorney Docket No. SDVNT-71008US1 :

This is a decision on the petition under 37 CFR 1.59(b), filed September 20, 2011, to expunge information from the above identified application. The petition will be considered under 37 CFR 1.182. Authorization was given to charge any underpayment or credit any overpayment associated with the submitted communication to Deposit Account No. 50-1826.

The petition is **GRANTED.**

Petitioner requests that two terminal disclaimers filed July 22, 2011, be expunged from the record. Petitioner indicates that the electronically filed documents were erroneously submitted and was intended for another application. The documents in question have been determined by the undersigned to not be material to the examination of the instant application.

In a paper file, the unintentionally submitted documents could, but not necessarily would, have been physically removed from the file wrapper and returned to applicant. In the IFW realm the corresponding action(s) is to close the document and also remove such from the listing of "Publicly available Documents." It is agreed that it would be appropriate in this instance to close the information in application serial no. 12/544,996, which was erroneously filed in the above identified application, and also remove such from the listing of publicly available documents for this Image File Wrapper (IFW). Petitioner understands that upon granting the petition, the image of the inadvertently recorded document would remain in the records, but that the link to said information in the application would be deleted.

Applicant is required to retain the expunged material(s) for the life of the patent which issued on the above-identified application.

The petitions fee of $400.00, required under 37 CFR 1.182 will be charged to petitioner's Deposit Account No. 50-1826.

Telephone inquiries concerning this communication should be directed to the undersigned at 571-272-0602.

Thurman K. Page
Petitions Examiner
Office of Petitions

UNITED STATES PATENT AND TRADEMARK OFFICE

Commissioner for Patents
United States Patent and Trademark Office
P.O. Box 1450
Alexandria, VA 22313-1450
www.uspto.gov

HITACHI C/O WAGNER BLECHER LLP
123 WESTRIDGE DRIVE
WATSONVILLE CA 95076

MAILED
DEC 02 2010
OFFICE OF PETITIONS

In re Application of :
Yasuna, et al. :
Application No. 12/545,000 : ON PETITION
Filed: August 20, 2009 :
Attorney Docket No. HJP920080013US1 :

This is a decision on the petition under 37 CFR 1.137(b), filed November 23, 2010, to revive the above-identified application.

The petition is **GRANTED**.

The application became abandoned on November 9, 2009, for failure to respond to the Notice to File Corrected Application Papers mailed September 8, 2009.

The petition satisfies the requirements of 37 CFR 1.137(b) in that petitioner has supplied (1) the reply in the form of replacement drawings; (2) the petition fee of $1620.00, and (3) an adequate statement of unintentional delay.

Telephone inquiries concerning this decisiòn should be directed to the undersigned at (571) 272-3222.

The application file is being directed to the Office of Patent Application Processing further processing.

/Kenya A. McLaughlin/

Kenya A. McLaughlin
Petitions Attorney
Office of Petitions

PTO/SB/20PCT-EP (05-10)
Approved for use through 01/31/2012. OMB 0651-0058
U.S. Patent and Trademark Office; U. S. DEPARTMENT OF COMMERCE
Under the Paperwork Reduction Act of 1995, no persons are required to respond to a collection of information unless it displays a valid OMB control number.

REQUEST FOR PARTICIPATION IN THE PATENT COOPERATION TREATY - PATENT PROSECUTION HIGHWAY (PCT-PPH) PILOT PROGRAM BETWEEN THE EUROPEAN PATENT OFFICE (EPO) AND THE USPTO

Application No:	12/545,016	Filing date:	August 20, 2009
First Named Inventor:	Paul August Jaster		
Title of the Invention:	DAYLIGHTING DEVICES AND METHODS WITH AUXILIARY LIGHTING FIXTURES		

THIS REQUEST FOR PARTICIPATION IN THE PCT-PPH PILOT PROGRAM ALONG WITH THE REQUIRED DOCUMENTS MUST BE SUBMITTED VIA EFS-WEB. INFORMATION REGARDING EFS-WEB IS AVAILABLE AT HTTP://WWW.USPTO.GOV/EBC/EFS_HELP.HTML

APPLICANT HEREBY REQUESTS PARTICIPATION IN THE PCT-PPH PROGRAM AND PETITIONS TO MAKE THE ABOVE-IDENTIFIED APPLICATION SPECIAL UNDER THE PCT-PPH PROGRAM.

The above-identified application is (1) a national stage entry of the corresponding PCT application, or (2) a national stage entry of another PCT application which claims priority to the corresponding PCT application, or (3) a national application that claims domestic/ foreign priority to the corresponding PCT application, or (4) a national application which forms the basis for the priority claim in the corresponding PCT application, or (5) a continuing application of a U.S. application that satisfies one of (1) to (4) above, or (6) a U.S. application that claims domestic benefit to a U.S. provisional application which forms the basis for the priority claim in the corresponding PCT application.

The corresponding PCT application number(s) is/are: PCT/US2010/045215

The international filing date of the corresponding PCT application(s) is/are: August 11, 2010

I. List of Required Documents:

a. **A copy of the latest international work product (WO/ISA, WO/IPEA, or IPER) in the above–identified corresponding PCT application(s)**

[x] Is attached

[ ] Is not attached because the document is already in the U.S. application.

b. **A copy of all claims which were indicated as having novelty, inventive step and industrial applicability in the above-identified corresponding PCT application(s).**

[x] Is attached.

[ ] Is not attached because the document is already in the U.S. application.

c. **English translations of the documents in a. and b. above are attached (if the documents are not in the English language). A statement that the English translation is accurate is attached for the document in b. above.**

This collection of information is required by 35 U.S.C. 119, 37 CFR 1.55, and 37 CFR 1.102(d). The information is required to obtain or retain a benefit by the public, which is to file (and by the USPTO to process) an application. Confidentiality is governed by 35 U.S.C. 122 and 37 CFR 1.11 and 1.14. This collection is estimated to take 2 hours to complete, including gathering, preparing, and submitting the completed application form to the USPTO. Time will vary depending upon the individual case. Any comments on the amount of time you require to complete this form and/or suggestions for reducing this burden should be sent to the Chief Information Officer, U.S. Patent and Trademark Office, U.S. Department of Commerce, P.O. Box 1450, Alexandria, VA 22313-1450. DO NOT SEND FEES OR COMPLETED FORMS TO THIS ADDRESS.

Approved for use through 01/31/2012. OMB 0651-0058
U.S.Patent and Trademark Office; U.S. DEPARTMENT OF COMMERCE

Under the Paperwork Reduction Act of 1995, no persons are required to respond to a collection of information unless it displays a valid OMB control number.

REQUEST FOR PARTICIPATION IN THE PCT-PPH PILOT PROGRAM BETWEEN THE EPO AND THE USPTO

(continued)

Application No.:	12/545,016
First Named Inventor:	Paul August Jaster

d. **(1) An information disclosure statement listing the documents cited in the international work products (ISR, WO/ISA, WO/IPEA, IPER) of the corresponding PCT application.**

☐ Is attached

☒ Has already been filed in the above-identified U.S. application on Nov. 2, 2010 and Jan. 19, 2011

(2) Copies of all documents (except) for U.S. patents or U.S. patent application publications)

☐ Are attached.

☒ Have already been filed in the above-identified U.S. application on Nov. 2, 2010 and Jan.19, 2011

II. Claims Correspondence Table:

Claims in US Application	Patentable Claims in the corresponding PCT Application	Explanation regarding the correspondence
Claim 1	Claim 7	Claims is of the same or similar scope.
Claims 2-4	Claim 7	Claims are narrower in scope.
Claim 6	Claim 10	Claim is narrower in scope.
Claim 8	Claim 7	Claim is narrower in scope.
Claim 9	Claim 9	Claim is of the same or similar scope.
Claim 10	Claim 10	Claim is of the same or similar scope.
Claims 11-12	Claim 10	Claims are narrower in scope.
Claim 13	Claim 19	Claim is of the same or similar scope.
Claim 14	Claim 19	Claim is narrower in scope.
Claim 15	Claim 15	Claim is of the same or similar scope.
Claim 16	Claim 16	Claim is of the same or similar scope.
Claims 17-18	Claim 15	Claims are narrower in scope.
Claim 20	Claim 20	Claim is of the same or similar scope.
Claim 21	Claim 21	Claim is of the same or similar scope.
Claim 22	Claim 22	Claim is of the same or similar scope.

III. All the claims in the US application sufficiently correspond to the patentable claims in the corresponding PCT application.

Signature Lance Smemoe	Date May 5, 2011
Name (Print/Typed) Lance D. Smemoe	Registration Number 66,152

PATENT COOPERATION TREATY

PCT

INTERNATIONAL SEARCH REPORT

(PCT Article 18 and Rules 43 and 44)

Applicant's or agent's file reference SOLTB001VPC	**FOR FURTHER ACTION**	see Form PCT/ISA/220 as well as, where applicable, item 5 below.
International application No. PCT/US2010/045215	International filing date *(day/month/year)* 11/08/2010	(Earliest) Priority Date *(day/month/year)* 20/08/2009
Applicant SOLATUBE INTERNATIONAL, INC.		

This international search report has been prepared by this International Searching Authority and is transmitted to the applicant according to Article 18. A copy is being transmitted to the International Bureau.

This international search report consists of a total of 5 sheets.

[X] It is also accompanied by a copy of each prior art document cited in this report.

1. **Basis of the report**
   a. With regard to the **language**, the international search was carried out on the basis of:
      [X] the international application in the language in which it was filed
      [ ] a translation of the international application into _____, which is the language of a translation furnished for the purposes of international search (Rules 12.3(a) and 23.1(b))
   b. [ ] This international search report has been established taking into account the **rectification of an obvious mistake** authorized by or notified to this Authority under Rule 91 (Rule 43.6*bis*(a)).
   c. [ ] With regard to any **nucleotide and/or amino acid sequence** disclosed in the international application, see Box No. I.
2. [ ] **Certain claims were found unsearchable** (See Box No. II)
3. [X] **Unity of invention is lacking** (see Box No III)
4. With regard to the **title**,
   [X] the text is approved as submitted by the applicant
   [ ] the text has been established by this Authority to read as follows:
5. With regard to the **abstract**,
   [ ] the text is approved as submitted by the applicant
   [X] the text has been established, according to Rule 38.2(b), by this Authority as it appears in Box No. IV. The applicant may, within one month from the date of mailing of this international search report, submit comments to this Authority
6. With regard to the **drawings**,
   a. the figure of the **drawings** to be published with the abstract is Figure No. 1
      [X] as suggested by the applicant
      [ ] as selected by this Authority, because the applicant failed to suggest a figure
      [ ] as selected by this Authority, because this figure better characterizes the invention
   b. [ ] none of the figures is to be published with the abstract

Box No. IV Text of the abstract (Continuation of item 5 of the first sheet)

Daylighting systems and methods with auxiliary lighting fixtures are disclosed. Some embodiments disclosed herein provide a daylighting apparatus including a tube (24) having a sidewall with a reflective interior surface and an auxiliary light fixture (30,32). The tube (24) can be disposed between a transparent cover (20) positioned to receive daylight and a diffuser (26) positioned inside a target area (12) of a building (16). In certain embodiments, the tube is configured to direct the daylight transmitted through the transparent cover towards the diffuser. The auxiliary light fixture can include a lamp (30) disposed within the tube (24) and a light control surface (32) configured to reflect light exiting the lamp towards the diffuser and to transmit daylight propagating through the tube from the direction of the transparent cover (20). The lamp (30) can be disposed on the sidewall of the tube.

INTERNATIONAL SEARCH REPORT

International application No
PCT/US2010/045215

A. CLASSIFICATION OF SUBJECT MATTER
INV. F21S19/00 E04D13/00 F21S11/00
ADD. F21Y101/02

According to International Patent Classification (IPC) or to both national classification and IPC

B. FIELDS SEARCHED

Minimum documentation searched (classification system followed by classification symbols)
F21S E04D

Documentation searched other than minimum documentation to the extent that such documents are included in the fields searched

Electronic data base consulted during the international search (name of data base and, where practical, search terms used)

EPO-Internal, WPI Data

C. DOCUMENTS CONSIDERED TO BE RELEVANT

Category*	Citation of document, with indication, where appropriate, of the relevant passages	Relevant to claim No.
X	US 5 546 712 A (BIXBY JOSEPH A [US]) 20 August 1996 (1996-08-20)	1
Y	column 4, line 12 - line 15 column 5, line 3 - line 6 figure 8	2-4
Y	CA 2 337 293 A1 (MACDONALD THOMPSON [CA]) 20 August 2002 (2002-08-20) the whole document	2-4
X Y	JP 60 164704 U (UNKNOWN) 1 November 1985 (1985-11-01) figures 4,5,6	1,4,13, 14,23,24 17,18

-/--

[X] Further documents are listed in the continuation of Box C.

[X] See patent family annex.

* Special categories of cited documents :

"A" document defining the general state of the art which is not considered to be of particular relevance

"E" earlier document but published on or after the international filing date

"L" document which may throw doubts on priority claim(s) or which is cited to establish the publication date of another citation or other special reason (as specified)

"O" document referring to an oral disclosure, use, exhibition or other means

"P" document published prior to the international filing date but later than the priority date claimed

"T" later document published after the international filing date or priority date and not in conflict with the application but cited to understand the principle or theory underlying the invention

"X" document of particular relevance; the claimed invention cannot be considered novel or cannot be considered to involve an inventive step when the document is taken alone

"Y" document of particular relevance; the claimed invention cannot be considered to involve an inventive step when the document is combined with one or more other such documents, such combination being obvious to a person skilled in the art.

"&" document member of the same patent family

Date of the actual completion of the international search	Date of mailing of the international search report
29 November 2010	06/12/2010

Name and mailing address of the ISA/	Authorized officer
European Patent Office, P.B. 5818 Patentlaan 2 NL - 2280 HV Rijswijk Tel. (+31-70) 340-2040, Fax: (+31-70) 340-3016	Prévot, Eric

6

Form PCT/ISA/210 (second sheet) (April 2005)

INTERNATIONAL SEARCH REPORT

International application No
PCT/US2010/045215

C(Continuation). DOCUMENTS CONSIDERED TO BE RELEVANT

Category*	Citation of document, with indication, where appropriate, of the relevant passages	Relevant to claim No.
X	US 5 117 811 A (TAYLOR ROBERT F [US]) 2 June 1992 (1992-06-02) column 2, line 61 - line 68 column 3, line 44 - line 49 figure 3	1,4
X	JP 60 142413 U (UNKNOWN) 20 September 1985 (1985-09-20) figure 3	1,4
X	JP 60 166906 U (UNKNOWN) 6 November 1985 (1985-11-06) figure 6	1,5,6,8, 11,12
Y	WO 2006/028703 A2 (ZINCONE ROBERT [US]) 16 March 2006 (2006-03-16)	17,18
A	page 8, line 4 - line 13 * abstract figures 2,3	13,23,24
A	BE 1 014 530 A5 (PLASTICS N V AG [BE]) 2 December 2003 (2003-12-02) figure 3	1,13,23, 24

6

Form PCT/ISA/210 (continuation of second sheet) (April 2005)

INTERNATIONAL SEARCH REPORT

International application No.
PCT/US2010/045215

Box No. II Observations where certain claims were found unsearchable (Continuation of item 2 of first sheet)

This international search report has not been established in respect of certain claims under Article 17(2)(a) for the following reasons:

1. ☐ Claims Nos.:
because they relate to subject matter not required to be searched by this Authority, namely:

2. ☐ Claims Nos.:
because they relate to parts of the international application that do not comply with the prescribed requirements to such an extent that no meaningful international search can be carried out, specifically:

3. ☐ Claims Nos.:
because they are dependent claims and are not drafted in accordance with the second and third sentences of Rule 6.4(a).

Box No. III Observations where unity of invention is lacking (Continuation of item 3 of first sheet)

This International Searching Authority found multiple inventions in this international application, as follows:

see additional sheet

1. ☒ As all required additional search fees were timely paid by the applicant, this international search report covers all searchable claims.

2. ☐ As all searchable claims could be searched without effort justifying an additional fees, this Authority did not invite payment of additional fees.

3. ☐ As only some of the required additional search fees were timely paid by the applicant, this international search report covers only those claims for which fees were paid, specifically claims Nos.:

4. ☐ No required additional search fees were timely paid by the applicant. Consequently, this international search report is restricted to the invention first mentioned in the claims; it is covered by claims Nos.:

Remark on Protest

☐ The additional search fees were accompanied by the applicant's protest and, where applicable, the payment of a protest fee.

☐ The additional search fees were accompanied by the applicant's protest but the applicable protest fee was not paid within the time limit specified in the invitation.

☒ No protest accompanied the payment of additional search fees.

FURTHER INFORMATION CONTINUED FROM PCT/ISA/ 210

This International Searching Authority found multiple (groups of) inventions in this international application, as follows:

1. claims: 1-12

A daylighting apparatus comprising:
a tube having a sidewall with a reflective interior surface, the tube disposed between a transparent cover configured to receive daylight and a diffuser configured to be positioned inside a target area of a building, the tube configured to direct the daylight transmitted through the transparent cover towards the diffuser; and
an auxiliary light fixture comprising a lamp configured to provide illumination to the interior of the tube by emitting a cone of light, the lamp positioned such that light exiting the lamp along the angular center of the cone of light propagates such that the light is incident on a surface other than the diffuser before propagating to the diffuser.

---

2. claims: 13-24

A daylighting apparatus comprising:
a tube having a sidewall with a reflective interior surface, the tube disposed between a transparent cover positioned to receive daylight and a diffuser, the tube configured to direct the daylight transmitted through the transparent cover towards the diffuser; and
an auxiliary light fixture comprising:
a lamp disposed to direct light within the tube; and
a light control surface configured to reflect light exiting the lamp towards the diffuser and to transmit daylight propagating through the tube from the direction of the transparent cover.
Independent claims 23 and 24 are directed to methods of providing light inside of a structure comprising the step of providing a light control surface and are considered to belong to the second group of inventions.

INTERNATIONAL SEARCH REPORT

Information on patent family members

International application No
PCT/US2010/045215

Patent document cited in search report	Publication date	Patent family member(s)	Publication date
US 5546712 A	20-08-1996	NONE	
CA 2337293 A1	20-08-2002	NONE	
JP 60164704 U	01-11-1985	NONE	
US 5117811 A	02-06-1992	NONE	
JP 60142413 U	20-09-1985	NONE	
JP 60166906 U	06-11-1985	JP 63037686 Y2	05-10-1988
WO 2006028703 A2	16-03-2006	NONE	
BE 1014530 A5	02-12-2003	NONE	

PATENT COOPERATION TREATY

From the
INTERNATIONAL SEARCHING AUTHORITY

To:

see form PCT/ISA/220

PCT

WRITTEN OPINION OF THE INTERNATIONAL SEARCHING AUTHORITY

(PCT Rule 43*bis*.1)

Date of mailing
(day/month/year) see form PCT/ISA/210 (second sheet)

Applicant's or agent's file reference
see form PCT/ISA/220

FOR FURTHER ACTION
See paragraph 2 below

International application No.	International filing date *(day/month/year)*	Priority date *(day/month/year)*
PCT/US2010/045215	11.08.2010	20.08.2009

International Patent Classification (IPC) or both national classification and IPC
INV. F21S19/00 E04D13/00 F21S11/00
ADD. F21Y101/02

Applicant
SOLATUBE INTERNATIONAL, INC.

1. This opinion contains indications relating to the following items:

- ☒ Box No. I Basis of the opinion
- ☐ Box No. II Priority
- ☐ Box No. III Non-establishment of opinion with regard to novelty, inventive step and industrial applicability
- ☒ Box No. IV Lack of unity of invention
- ☒ Box No. V Reasoned statement under Rule 43*bis*.1(a)(i) with regard to novelty, inventive step and industrial applicability; citations and explanations supporting such statement
- ☐ Box No. VI Certain documents cited
- ☐ Box No. VII Certain defects in the international application
- ☐ Box No. VIII Certain observations on the international application

2. **FURTHER ACTION**

If a demand for international preliminary examination is made, this opinion will usually be considered to be a written opinion of the International Preliminary Examining Authority ("IPEA") except that this does not apply where the applicant chooses an Authority other than this one to be the IPEA and the chosen IPEA has notifed the International Bureau under Rule 66.1*bis*(b) that written opinions of this International Searching Authority will not be so considered.

If this opinion is, as provided above, considered to be a written opinion of the IPEA, the applicant is invited to submit to the IPEA a written reply together, where appropriate, with amendments, before the expiration of 3 months from the date of mailing of Form PCT/ISA/220 or before the expiration of 22 months from the priority date, whichever expires later.

For further options, see Form PCT/ISA/220.

3. For further details, see notes to Form PCT/ISA/220.

Name and mailing address of the ISA:	Date of completion of this opinion	Authorized Officer
European Patent Office P.B. 5818 Patentlaan 2 NL-2280 HV Rijswijk - Pays Bas Tel. +31 70 340 - 2040 Fax: +31 70 340 - 3016	see form PCT/ISA/210	Prévot, Eric Telephone No. +31 70 340-3903

WRITTEN OPINION OF THE INTERNATIONAL SEARCHING AUTHORITY

International application No.
PCT/US2010/045215

Box No. I Basis of the opinion

1. With regard to the **language**, this opinion has been established on the basis of:

   ☒ the international application in the language in which it was filed

   ☐ a translation of the international application into , which is the language of a translation furnished for the purposes of international search (Rules 12.3(a) and 23.1 (b)).

2. ☐ This opinion has been established taking into account the **rectification of an obvious mistake** authorized by or notified to this Authority under Rule 91 (Rule 43bis.1(a))

3. With regard to any **nucleotide and/or amino acid sequence** disclosed in the international application, this opinion has been established on the basis of a sequence listing filed or furnished:

   a. (means)

   ☐ on paper

   ☐ in electronic form

   b. (time)

   ☐ in the international application as filed

   ☐ together with the international application in electronic form

   ☐ subsequently to this Authority for the purposes of search

4. ☐ In addition, in the case that more than one version or copy of a sequence listing has been filed or furnished, the required statements that the information in the subsequent or additional copies is identical to that in the application as filed or does not go beyond the application as filed, as appropriate, were furnished.

5. Additional comments:

Box No. IV Lack of unity of invention

1. ☒ In response to the invitation (Form PCT/ISA/206) to pay additional fees, the applicant has, within the applicable time limit:

   ☒ paid additional fees

   ☐ paid additional fees under protest and, where applicable, the protest fee

   ☐ paid additional fees under protest but the applicable protest fee was not paid

   ☐ not paid additional fees

2. ☐ This Authority found that the requirement of unity of invention is not complied with and chose not to invite the applicant to pay additional fees.

3. This Authority considers that the requirement of unity of invention in accordance with Rule 13.1, 13.2 and 13.3 is

   ☐ complied with

   ☒ not complied with for the following reasons:

   see separate sheet

4. Consequently, this report has been established in respect of the following parts of the international application:

   ☒ all parts.

   ☐ the parts relating to claims Nos. 1-12

Box No. V Reasoned statement under Rule 43*bis*.1(a)(i) with regard to novelty, inventive step or industrial applicability; citations and explanations supporting such statement

1. Statement

Novelty (N)	Yes:	Claims	2, 3, 7, 9, 10, 15-22
	No:	Claims	1, 4-6, 8, 11-14, 23, 24
Inventive step (IS)	Yes:	Claims	7, 9, 10, 15, 16, 19-22
	No:	Claims	1-6, 8, 11-14, 17, 18, 23, 24
Industrial applicability (IA)	Yes:	Claims	1-24
	No:	Claims	

2. Citations and explanations

   see separate sheet

Re Item IV

Lack of unity of invention

1 This Authority considers that the application does not meet the requirements of unity of invention and that there are 2 inventions covered by the claims indicated as follows:

Claims 1-12 directed to a daylighting apparatus comprising:

a tube having a sidewall with a reflective interior surface, the tube disposed between a transparent cover configured to receive daylight and a diffuser configured to be positioned inside a target area of a building, the tube configured to direct the daylight transmitted through the transparent cover towards the diffuser; and

an auxiliary light fixture comprising a lamp configured to provide illumination to the interior of the tube by emitting a cone of light, the lamp positioned such that light exiting the lamp along the angular center of the cone of light propagates such that the light is incident on a surface other than the diffuser before propagating to the diffuser.

Claims 13-22 directed to a daylighting apparatus comprising:

a tube having a sidewall with a reflective interior surface, the tube disposed between a transparent cover positioned to receive daylight and a diffuser, the tube configured to direct the daylight transmitted through the transparent cover towards the diffuser; and

an auxiliary light fixture comprising:

a lamp disposed to direct light within the tube; and

a light control surface configured to reflect light exiting the lamp towards the diffuser and to transmit daylight propagating through the tube from the direction of the transparent cover.

Claims 23 and 24 are directed to methods of providing light inside of a structure comprising the step of providing a light control surface and are considered to belong to the second group of inventions.

2 The reasons for which the inventions are not so linked as to form a single general inventive concept, as required by Rule 13.1 PCT, are as follows:

The prior art has been identified as document US5546712 and discloses (see figure 8) a daylighting apparatus comprising a tube having (40) a sidewall with a reflective interior surface (41), the tube disposed between a transparent cover (12) configured to receive daylight and a diffuser (32) configured to be positioned inside a target area of a building, the tube configured to direct the daylight transmitted through the transparent cover towards the diffuser; and an auxiliary light fixture (62) comprising a lamp configured to provide illumination to the interior of the tube by emitting a cone of light, the lamp positioned such that light exiting the lamp along the angular center of the cone of light propagates such that the light is incident on a surface other than the diffuser before propagating to the diffuser (see column 5, line 3 - line 6).

It follows that the following technical features of claims 2 and 3 make a contribution over the prior art and can be considered as special technical features within the meaning of Rule 13.2 PCT:

The lamp comprises a surface-mount light-emitting diode having a planar surface from which the cone of light is emitted, the planar surface being substantially parallel to the sidewall of the tube.

The problem solved by these special technical features can therefore be construed as to reduce the size of the lighting device and to simplify its construction.

From a comparison of the disclosure of this prior art and the technical features of claim 13, the following features can be seen to make a contribution over this prior art:

The auxiliary light fixture further comprises a light control surface configured to reflect light exiting the lamp toward the diffuser and to transmit daylight propagating through the tube from the direction of the transparent cover.

These features allow the lighting device to be placed in the tube, and minimizes the fraction of daylight that could be absorbed by the auxiliary light fixture.

The above analysis shows that the special technical features of claims 1-12 are neither the same as nor corresponding to those of claims 13-24 because they solve different problems and have different technical effects.

In conclusion, the groups of claims are not linked by common or corresponding special technical features and define 2 different inventions not linked by a single general inventive concept.

The application, hence does not meet the requirements of unity of invention as defined in Rules 13.1 and 13.2 PCT.

Re Item V

Reasoned statement with regard to novelty, inventive step or industrial applicability; citations and explanations supporting such statement

3 Reference is made to the following documents:

D1 US 5 546 712 A (BIXBY JOSEPH A [US]) 20 August 1996 (1996-08-20)

D2 CA 2 337 293 A1 (MACDONALD THOMPSON [CA]) 20 August 2002 (2002-08-20)

D3 JP 60 164704 U (UNKNOWN) 1 November 1985 (1985-11-01)

D4 US 5 117 811 A (TAYLOR ROBERT F [US]) 2 June 1992 (1992-06-02)

D5 JP 60 142413 U (UNKNOWN) 20 September 1985 (1985-09-20)

D6 JP 60 166906 U (UNKNOWN) 6 November 1985 (1985-11-06)

D7 WO 2006/028703 A2 (ZINCONE ROBERT [US]) 16 March 2006 (2006-03-16)

FIRST INVENTION

4 INDEPENDENT CLAIM 1

The present application does not meet the criteria of Article 33(1) PCT, because the subject-matter of claim 1 is not new in the sense of Article 33(2) PCT.

4.1 Document D1 discloses (the references in parentheses applying to this document):

A daylighting apparatus comprising a tube having (40) a sidewall with a reflective interior surface (41), the tube disposed between a transparent cover (12) configured to receive daylight and a diffuser (32) configured to be positioned inside a target area of a building, the tube configured to direct the daylight transmitted through the transparent cover towards the diffuser; and an auxiliary light fixture (62) comprising a lamp configured to provide illumination to the interior of the tube by emitting a cone of light, the lamp positioned such that light exiting the lamp along the angular center of the cone of light propagates such that the light is incident on a surface other than the diffuser before propagating to the diffuser (see column 5, line 3 - line 6).

Equally, documents D3-D6 disclose all the technical features of claim 1.

5 DEPENDENT CLAIMS 2-6,8,11,12

Dependent claims 2-6,8,11,12 do not contain any features which, in combination with the features of any claim to which they refer, meet the requirements of the PCT in respect of novelty and/or inventive step (Article 33

(2) and (3) PCT), see document D2. Even though D2 does not disclose a surface-mount LED, the skilled person would consider a surface mount LED as a normal option, without the use of inventive skill.

6 DEPENDENT CLAIMS 7,9,10

The combination of the features of dependent claims 7,9,10 is neither known from, nor rendered obvious by, the available prior art.

SECOND INVENTION

7 INDEPENDENT CLAIM 13

7.1 The present application does not meet the criteria of Article 33(1) PCT, because the subject-matter of claim 13 is not new in the sense of Article 33(2) PCT.

7.2 Document D3 discloses in figures 4-6 (the references in parentheses applying to this document):

A daylighting apparatus comprising:

a tube (5) having a sidewall (5) with a reflective interior surface, the tube disposed between a transparent cover (4) positioned to receive daylight and a diffuser, the tube configured to direct the daylight transmitted through the transparent cover towards the diffuser; and

an auxiliary light fixture (7) comprising:

a lamp disposed to direct light within the tube; and

a light control surface (8) configured to reflect light exiting the lamp towards the diffuser and to transmit (by reflection) daylight propagating through the tube from the direction of the transparent cover.

8 INDEPENDENT CLAIM 23

8.1 The present application does not meet the criteria of Article 33(1) PCT, because the subject-matter of claim 23 is not new in the sense of Article 33(2) PCT.

8.2 Document D3 discloses in figures 4-6 (the references in parentheses applying to this document):

A method of providing light inside of a structure, the method comprising the steps of

positioning a tube (6) between a transparent cover (4) and a diffuser (implicit) in a manner that permits daylight to be directed from the cover (4) through the diffuser;

providing an auxiliary light source (7) that emits light to a region inside of the tube; and

providing a light control surface (8) near the auxiliary light source that reflects light exiting the lamp towards the diffuser and transmits daylight from the transparent cover in the general direction of the diffuser (see figures 5 and 6)

9 INDEPENDENT CLAIM 24

The present application does not meet the criteria of Article 33(1) PCT, because the subject-matter of claim 24 is not new in the sense of Article 33(2) PCT.

9.1 Document D3 discloses (the references in parentheses applying to this document):

A method of lighting an interior of a building, the method comprising the steps of:

permitting daylight to pass from a transparent cover through a tube (6) to a diffuser inside of the building;

emitting light from an auxiliary light source (7b) to a region within the tube; and

reflecting light from the auxiliary light source off of a light control surface toward the diffuser and simultaneously or at a different time permitting daylight to pass through the light control surface (see figures 5 and 6

Document D6 also discloses the technical features of claim 24 (see figure 9A and 9B)

10 DEPENDENT CLAIMS 14, 17, 18

Dependent claims 14, 17, 18 do not contain any features which, in combination with the features of any claim to which they refer, meet the requirements of the PCT in respect of novelty and/or inventive step (Article 33 (2) and (3) PCT).

11 DEPENDENT CLAIMS 15, 16, 19-22

The combination of the features of dependent claims 15, 16, 19-22 are neither known from, nor rendered obvious by, the available prior art.

Possible steps after receipt of the international search report (ISR) and written opinion of the International Searching Authority (WO-ISA)

General information	For all international applications filed on or after 01/01/2004 the competent ISA will establish an ISR. It is accompanied by the WO-ISA. Unlike the former written opinion of the IPEA (Rule 66.2 PCT), the WO-ISA is not meant to be responded to, but to be taken into consideration for further procedural steps. This document explains about the possibilities.
Amending claims under Art. 19 PCT	Within 2 months after the date of mailing of the ISR and the WO-ISA the applicant may file amended claims under Art. 19 PCT directly with the International Bureau of WIPO. The PCT reform of 2004 did not change this procedure. For further information please see Rule 46 PCT as well as form PCT/ISA/220 and the corresponding Notes to form PCT/ISA/220.
Filing a demand for international preliminary examination	In principle, the WO-ISA will be considered as the written opinion of the IPEA. This should, in many cases, make it unnecessary to file a demand for international preliminary examination. If the applicant nevertheless wishes to file a demand this must be done before expiry of 3 months after the date of mailing of the ISR/WO-ISA or 22 months after priority date, whichever expires later (Rule 54bis PCT). Amendments under Art. 34 PCT can be filed with the IPEA as before, normally at the same time as filing the demand (Rule 66.1 (b) PCT). If a demand for international preliminary examination is filed and no comments/amendments have been received the WO-ISA will be transformed by the IPEA into an IPRP (International Preliminary Report on Patentability) which would merely reflect the content of the WO-ISA. The demand can still be withdrawn (Art. 37 PCT).
Filing informal comments	After receipt of the ISR/WO-ISA the applicant may file informal comments on the WO-ISA directly with the International Bureau of WIPO. These will be communicated to the designated Offices together with the IPRP (International Preliminary Report on Patentability) at 30 months from the priority date. Please also refer to the next box.
End of the international phase	At the end of the international phase the International Bureau of WIPO will transform the WO-ISA or, if a demand was filed, the written opinion of the IPEA into the IPRP, which will then be transmitted together with possible informal comments to the designated Offices. The IPRP replaces the former IPER (international preliminary examination report).
Relevant PCT Rules and more information	Rule 43 PCT, Rule 43bis PCT, Rule 44 PCT, Rule 44bis PCT, PCT Newsletter 12/2003, OJ 11/2003, OJ 12/2003

WHAT IS CLAIMED IS:

1. A daylighting apparatus comprising:

a tube having a sidewall with a reflective interior surface, the tube disposed between a transparent cover configured to receive daylight and a diffuser configured to be positioned inside a target area of a building, the tube configured to direct the daylight transmitted through the transparent cover towards the diffuser; and

an auxiliary light fixture comprising a lamp configured to provide illumination to the interior of the tube by emitting a cone of light, the lamp positioned such that light exiting the lamp along the angular center of the cone of light propagates such that the light is incident on a surface other than the diffuser before propagating to the diffuser.

2. The daylighting apparatus of Claim 1, wherein the lamp comprises a surface-mount light-emitting diode having a planar surface from which the cone of light is emitted.

3. The daylighting apparatus of Claim 2, wherein the planar surface is substantially parallel to the sidewall of the tube.

4. The daylighting apparatus of Claim 1, wherein the lamp is disposed on the sidewall of the tube.

5. The daylighting apparatus of Claim 1, wherein the auxiliary light fixture further comprises a light control surface extending from the sidewall of the tube and configured to redirect at least a portion of light emanating from the lamp towards the diffuser.

6. The daylighting apparatus of Claim 5, wherein the light control surface comprises a reflector.

7. The daylighting apparatus of Claim 6, wherein the light control surface comprises a prismatic film configured to reflect the light exiting the lamp and to transmit daylight propagating through the tube from the direction of the transparent cover.

8. The daylighting apparatus of Claim 5, wherein the shape of the light control surface is substantially half-cylindrical.

9. The daylighting apparatus of Claim 8, wherein the light control surface comprises a top edge and a base perimeter, the top edge abutting the sidewall of the tube and the base perimeter being substantially coplanar with a base of the lamp.

10. The daylighting apparatus of Claim 8, wherein the light control surface is positioned such that a radius point of the light control surface is approximately at a base of the lamp.

11. The daylighting apparatus of Claim 5, wherein the light control surface is tilted at an angle away from a perpendicular orientation with respect to the sidewall.

12. The daylighting apparatus of Claim 11, wherein the angle between the light control surface and the perpendicular orientation is at least about 20 degrees.

13. A daylighting apparatus comprising:

a tube having a sidewall with a reflective interior surface, the tube disposed between a transparent cover positioned to receive daylight and a diffuser, the tube configured to direct the daylight transmitted through the transparent cover towards the diffuser; and

an auxiliary light fixture comprising:

a lamp disposed to direct light within the tube; and

a light control surface configured to reflect light exiting the lamp towards the diffuser and to transmit daylight propagating through the tube from the direction of the transparent cover.

14. The daylighting apparatus of Claim 13, wherein the lamp is connected to the sidewall of the tube.

15. The daylighting apparatus of Claim 14, wherein thermal grease is disposed between the lamp and the sidewall.

16. The daylighting apparatus of Claim 13, wherein a base perimeter of the light control surface is substantially coplanar with a lower edge of the lamp.

17. The daylighting apparatus of Claim 13, wherein the lamp comprises a light-emitting diode.

18. The daylighting apparatus of Claim 17, wherein the auxiliary light fixture comprises at least a second light-emitting diode.

19. The daylighting apparatus of Claim 18, wherein the auxiliary light fixture comprises at least a second light control surface.

20. The daylighting apparatus of Claim 13, wherein the light control surface comprises a polycarbonate film.

21. The daylighting apparatus of Claim 13, wherein the light control surface comprises turning microstructure disposed on a side of the surface closest to the transparent cover.

22. The daylighting apparatus of Claim 21, wherein the turning microstructure comprises a plurality of elongate prisms extending from the sidewall to a base perimeter of the light control surface.

23. A method of providing light inside of a structure, the method comprising the steps of:

positioning a tube between a transparent cover and a diffuser in a manner that permits daylight to be directed from the cover through the diffuser;

providing an auxiliary light source that emits light to a region inside of the tube; and

providing a light control surface near the auxiliary light source that reflects light exiting the lamp towards the diffuser and transmits daylight from the transparent cover in the general direction of the diffuser.

24. A method of lighting an interior of a building, the method comprising the steps of:

permitting daylight to pass from a transparent cover through a tube to a diffuser inside of the building;

emitting light from an auxiliary light source to a region within the tube; and

reflecting light from the auxiliary light source off of a light control surface toward the diffuser and simultaneously or at a different time permitting daylight to pass through the light control surface.

UNITED STATES PATENT AND TRADEMARK OFFICE

UNITED STATES DEPARTMENT OF COMMERCE
United States Patent and Trademark Office
Address: COMMISSIONER FOR PATENTS
P.O. Box 1450
Alexandria, Virginia 22313-1450
www.uspto.gov

APPLICATION NO.	FILING DATE	FIRST NAMED INVENTOR	ATTORNEY DOCKET NO.	CONFIRMATION NO.
12/545,016	08/20/2009	Paul August Jaster	SOLTB.001A	1494

20995 7590 06/09/2011
KNOBBE MARTENS OLSON & BEAR LLP
2040 MAIN STREET
FOURTEENTH FLOOR
IRVINE, CA 92614

EXAMINER
SEMBER, THOMAS M

ART UNIT	PAPER NUMBER
2885	

NOTIFICATION DATE	DELIVERY MODE
06/09/2011	ELECTRONIC

Please find below and/or attached an Office communication concerning this application or proceeding.

The time period for reply, if any, is set in the attached communication.

Notice of the Office communication was sent electronically on above-indicated "Notification Date" to the following e-mail address(es):

jcartee@kmob.com
efiling@kmob.com
eOAPilot@kmob.com

UNITED STATES PATENT AND TRADEMARK OFFICE

Commissioner for Patents
United States Patent and Trademark Office
P.O. Box 1450
Alexandria, VA 22313-1450
www.uspto.gov

KNOBBE MARTENS OLSON & BEAR LLP
2040 MAIN STREET
FOURTEENTH FLOOR
IRVINE CA 92614

In re Application of	**: DECISION ON REQUEST TO**
Paul JASTER	**: PARTICIPATE IN THE PATENT**
Application No.: 12/545,016	**: PROSECUTION HIGHWAY**
Filed: 20 August 2009	**: PROGRAM AND PETITION**
Attorney Docket No.: SOLTB.001A	**: TO MAKE SPECIAL UNDER**
For: DAYLIGHTING DEVICES AND METHODS WITH AUXILIARY LIGHTING FIXTURES	**: 37 CFR 1.102(a)**

This is a decision on the request to participate in the PCT Patent Prosecution Highway (PCT-PPH) pilot program and the petition under 37 CFR 1.102(a), filed 05 May 2011, to make the above-identified application special.

The request and petition are **GRANTED**.

Discussion

A grantable request to participate in the PCT-PPH pilot program and petition to make special require:

(1) The U.S. application must have an eligible relationship to one or more PCT applications where the ISA or IPEA are the JPO, EPO, KIPO, or USPTO;

(2) At least one claim in the PCT application has novelty, inventive step, and industrial applicability and must be free of any observations in Box VIII in the latest work product in the international stage or applicant must identify and explain why the claim(s) is/are not subject to the observation in Box VIII;

(3) Applicant must submit a copy of the claim(s) from the PCT application(s) that have novelty, inventive step, and industrial applicability along with an English translation thereof and a statement that the English translation is accurate, if the claims are not in the English language;

(4) All the claims in the U.S. application must sufficiently correspond or be amended to sufficiently correspond to the claim(s) that have novelty, inventive step, and industrial applicability in the PCT application(s);

(5) Examination of the U.S. application has not begun;

(6) Applicant must submit a copy of the latest international work product from the PCT application indicating that the claim(s) have novelty, inventive step, and industrial applicability along with an English translation thereof and a statement that the English translation is accurate if the latest international work product is not in the English language;

(7) Applicant must submit an IDS listing the documents cited by the PCT examiner in the international work product along with copies of documents except U.S. patents or U.S. patent application publications.

The request to participate in the PCT-PPH pilot program and petition comply with the above requirements. Accordingly, the above-identified application has been accorded "special" status.

Telephone inquiries concerning this decision should be directed to Lee W. Young at 571-272-4549.

All other inquiries concerning the examination or status of the application is accessible in the PAIR system at http://www.uspto.gov/ebc.index.html.

This application will be forwarded to the examiner for action on the merits commensurate with this decision once this application's formality reviews have been completed.

Lee W. Young
TQAS Technology Center 2800 - Semiconductors,
Electrical & Optical Systems & Components

PTO/SB/20PCT-EP (05-10)
Approved for use through 01/31/2015. OMB 0651-0058
U.S. Patent and Trademark Office; U.S DEPARTMENT OF COMMERCE
Under the Paperwork Reduction Act of 1995, no persons are required to respond to a collection of information unless it displays a valid OMB control number.

REQUEST FOR PARTICIPATION IN THE PATENT COOPERATION TREATY – PATENT PROSECUTION HIGHWAY (PCT-PPH) PILOT PROGRAM BETWEEN THE EUROPEAN PATENT OFFICE (EPO) AND THE USPTO

Application No.:	12/545098	First Named Inventor:	Diego Bonta, et al.
Filing Date:	August 21, 2009	Attorney Docket No.:	68550-US-NP
Title of the Invention:	END CAP ASSEMLBY ADAPTED FOR INTERCONNECTING FILTRATION ELEMENTS		

THIS REQUEST FOR PARTICIPATION IN THE PCT-PPH PILOT PROGRAM ALONG WITH THE REQUIRED DOCUMENTS MUST BE SUBMITTED VIA EFS-WEB. INFORMATION REGARDING EFS-WEB IS AVAILABLE AT HTTP://WWW.USPTO.GOV/EBC/EFS_HELP.HTML.

APPLICANT HEREBY REQUESTS PARTICIPATION IN THE PCT-PPH PILOT PROGRAM AND PETITIONS TO MAKE THE ABOVE-IDENTIFIED APPLICATION SPECIAL UNDER THE PCT-PPH PILOT PROGRAM.

The above-identified application is (1) a national stage entry of the corresponding PCT application, or (2) a national stage entry of another PCT application which claims priority to the corresponding PCT application, or (3) a national application that claims domestic/ foreign priority to the corresponding PCT application, or (4) a national application which forms the basis for the priority claim in the corresponding PCT application, or (5) a continuing application of a U.S. application that satisfies one of (1) to (4) above, or (6) a U.S. application that claims domestic benefit to a U.S. provisional application which forms the basis for the priority claim in the corresponding PCT application.

The corresponding PCT application number(s) is/are: PCT/US2010/044189

The international filing date of the corresponding PCT application(s) is/are: August 3, 2010

I. List of Required Documents:

a. **A copy of the latest international work product (WO/ISA, WO/IPEA, or IPER) in the above-identified corresponding PCT application(s)**

- ☑ is attached.
- ☐ is not attached because the document is already in the U.S. application.

b. **A copy of all claims which were indicated as having novelty, inventive step and industrial applicability in the above-identified corresponding PCT application(s)**

- ☑ is attached.
- ☐ is not attached because the document is already in the U.S. application.

c. **English translations of the documents in a. and b. above are attached (if the documents are not in the English language). A statement that the English translation is accurate is attached for the document in b. above.**

d. **(1) An information disclosure statement listing the documents cited in the international work products (ISR, WO/ISA, WO/IPEA, IPER) of the corresponding PCT application.**

- ☐ is attached.
- ☑ has already been filed in the above-identified U.S. application on December 29, 2010

(2) Copies of all documents (except for U.S. patents or U.S. patent application publications)

- ☐ are attached.
- ☑ have already been filed in the above-identified U.S. application on December 29, 2010

This collection of information is required by 35 U.S.C. 119, 37 CFR 1.55, and 37 CFR 1.102(d). The information is required to obtain or retain a benefit by the public, which is to file (and by the USPTO to process) an application. Confidentiality is governed by 35 U.S.C. 122 and 37 CFR 1.11 and 1.14. This collection is estimated to take 2 hours to complete, including gathering, preparing, and submitting the completed application form to the USPTO. Time will vary depending upon the individual case. Any comments on the amount of time you require to complete this form and/or suggestions for reducing this burden should be sent to the Chief Information Officer, U.S. Patent and Trademark Office, U.S. Department of Commerce, P.O. Box 1450, Alexandria, VA 22313-1450. DO NOT SEND FEES OR COMPLETED FORMS TO THIS ADDRESS.

Under the Paperwork Reduction Act of 1995, no persons are required to respond to a collection of information unless it displays a valid OMB control number.

REQUEST FOR PARTICIPATION IN THE PCT-PPH PILOT PROGRAM BETWEEN THE EPO AND THE USPTO

(continued)

Application No.:	12/545098	First Named Inventor:	Diego Bonta, et al.

II. Claims Correspondence Table:

Claims in US Application	Patentable Claims in the corresponding PCT application	Explanation regarding the correspondence
1 - 10	1 - 10	Claims are identical accept for claim dependency

III. All the claims in the US application sufficiently correspond to the patentable claims in the corresponding PCT application.

Signature /Edward W. Black/	Date March 2, 2012
Name (Print/Typed) Edward W. Black	Registration Number 36454

Privacy Act Statement

The **Privacy Act of 1974 (P.L. 93-579)** requires that you be given certain information in connection with your submission of the attached form related to a patent application or patent. Accordingly, pursuant to the requirements of the Act, please be advised that: (1) the general authority for the collection of this information is 35 U.S.C. 2(b)(2); (2) furnishing of the information solicited is voluntary; and (3) the principal purpose for which the information is used by the U.S. Patent and Trademark Office is to process and/or examine your submission related to a patent application or patent. If you do not furnish the requested information, the U.S. Patent and Trademark Office may not be able to process and/or examine your submission, which may result in termination of proceedings or abandonment of the application or expiration of the patent.

The information provided by you in this form will be subject to the following routine uses:

1. The information on this form will be treated confidentially to the extent allowed under the Freedom of Information Act (5 U.S.C. 552) and the Privacy Act (5 U.S.C 552a). Records from this system of records may be disclosed to the Department of Justice to determine whether disclosure of these records is required by the Freedom of Information Act.
2. A record from this system of records may be disclosed, as a routine use, in the course of presenting evidence to a court, magistrate, or administrative tribunal, including disclosures to opposing counsel in the course of settlement negotiations.
3. A record in this system of records may be disclosed, as a routine use, to a Member of Congress submitting a request involving an individual, to whom the record pertains, when the individual has requested assistance from the Member with respect to the subject matter of the record.
4. A record in this system of records may be disclosed, as a routine use, to a contractor of the Agency having need for the information in order to perform a contract. Recipients of information shall be required to comply with the requirements of the Privacy Act of 1974, as amended, pursuant to 5 U.S.C. 552a(m).
5. A record related to an International Application filed under the Patent Cooperation Treaty in this system of records may be disclosed, as a routine use, to the International Bureau of the World Intellectual Property Organization, pursuant to the Patent Cooperation Treaty.
6. A record in this system of records may be disclosed, as a routine use, to another federal agency for purposes of National Security review (35 U.S.C. 181) and for review pursuant to the Atomic Energy Act (42 U.S.C. 218(c)).
7. A record from this system of records may be disclosed, as a routine use, to the Administrator, General Services, or his/her designee, during an inspection of records conducted by GSA as part of that agency's responsibility to recommend improvements in records management practices and programs, under authority of 44 U.S.C. 2904 and 2906. Such disclosure shall be made in accordance with the GSA regulations governing inspection of records for this purpose, and any other relevant (*i.e.*, GSA or Commerce) directive. Such disclosure shall not be used to make determinations about individuals.
8. A record from this system of records may be disclosed, as a routine use, to the public after either publication of the application pursuant to 35 U.S.C. 122(b) or issuance of a patent pursuant to 35 U.S.C. 151. Further, a record may be disclosed, subject to the limitations of 37 CFR 1.14, as a routine use, to the public if the record was filed in an application which became abandoned or in which the proceedings were terminated and which application is referenced by either a published application, an application open to public inspection or an issued patent.
9. A record from this system of records may be disclosed, as a routine use, to a Federal, State, or local law enforcement agency, if the USPTO becomes aware of a violation or potential violation of law or regulation.

UNITED STATES PATENT AND TRADEMARK OFFICE

Commissioner for Patents
United States Patent and Trademark Office
P.O. Box 1450
Alexandria, VA 22313-1450
www.uspto.gov

THE DOW CHEMICAL COMPANY
P.O. BOX 1967
2040 DOW CENTER
MIDLAND, MI 48641

MAILED
MAR 15 2012
OFFICE OF PETITIONS

In re Application of
Diego Bonta, et al.
Application No.: 12/545,098
Filed: August 21, 2009
Attorney Docket No.: 68550-US-NP
For: **END CAP ASSEMBLY ADAPTED FOR INTERCONNECTING FILTRATION ELEMENTS**

: DECISION ON REQUEST TO
: PARTICIPATE IN THE PATENT
: PROSECUTION HIGHWAY
: PROGRAM AND PETITION
: TO MAKE SPECIAL UNDER
: 37 CFR 1.102(a)

This is a decision on the request to participate in the PCT Patent Prosecution Highway (PCT-PPH) pilot program and the petition under 37 CFR 1.102(a), filed on March 2, 2012 to make the above-identified application special.

The request and petition are **GRANTED**.

Discussion

A grantable request to participate in the PCT-PPH pilot program and petition to make special require:

(1) The U.S. application must have an eligible relationship to one or more PCT applications where the ISA or IPEA are the JPO, EPO, KIPO, NPI, NBPR, IPAU, APO, RU, SPTO, PRV, SIPO or USPTO;

(2) At least one claim in the PCT application has novelty, inventive step, and industrial applicability and must be free of any observations in Box VIII in the latest work product in the international stage or applicant must identify and explain why the claim(s) is/are not subject to the observation in Box VIII;

(3) Applicant must submit a copy of the claim(s) from the PCT application(s) that have novelty, inventive step, and industrial applicability along with an English translation thereof and a statement that the English translation is accurate, if the claims are not in the English language;

(4) All the claims in the U.S. application must sufficiently correspond or be amended to sufficiently correspond to the claim(s) that have novelty, inventive step, and industrial applicability in the PCT application(s);

(5) Examination of the U.S. application has not begun;

(6) Applicant must submit a copy of the latest international work product from the PCT application indicating that the claim(s) have novelty, inventive step, and industrial applicability along with an English translation thereof and a statement that the English translation is accurate if the latest international work product is not in the English language;

(7) Applicant must submit an IDS listing the documents cited by the PCT examiner in the international work product along with copies of documents except U.S. patents or U.S. patent application publications.

The request to participate in the PCT-PPH pilot program and petition comply with the above requirements. Accordingly, the above-identified application has been accorded "special" status.

Telephone inquiries concerning this decision should be directed to the undersigned at 571-272-3204.

All other inquiries concerning the examination or status of the application is accessible in the PAIR system at http://www.uspto.gov/ebc.index.html.

This application will be forwarded to the examiner for action on the merits commensurate with this decision.

/SDB/

Sherry D. Brinkley
Petitions Examiner
Office of Petitions

UNITED STATES PATENT AND TRADEMARK OFFICE

UNITED STATES DEPARTMENT OF COMMERCE
United States Patent and Trademark Office
Address: COMMISSIONER FOR PATENTS
P.O. Box 1450
Alexandria, Virginia 22313-1450
www.uspto.gov

APPLICATION NO.	FILING DATE	FIRST NAMED INVENTOR	ATTORNEY DOCKET NO.	CONFIRMATION NO.
12/545,139	08/21/2009	CHRISTIAN L. SCHOEN	P08903US01	1721

22885 7590 10/11/2011
MCKEE, VOORHEES & SEASE, P.L.C.
801 GRAND AVENUE
SUITE 3200
DES MOINES, IA 50309-2721

EXAMINER
EPPS -SMITH, JANET L

ART UNIT	PAPER NUMBER
1633	

NOTIFICATION DATE	DELIVERY MODE
10/11/2011	ELECTRONIC

Please find below and/or attached an Office communication concerning this application or proceeding.

The time period for reply, if any, is set in the attached communication.

Notice of the Office communication was sent electronically on above-indicated "Notification Date" to the following e-mail address(es):

patatty@ipmvs.com

UNITED STATES PATENT AND TRADEMARK OFFICE

Commissioner for Patents
United States Patent and Trademark Office
P.O. Box 1450
Alexandria, VA 22313-1450
www.uspto.gov

OCT 11 2011

MCKEE, VOORHEES & SEASE, P.L.C.
801 GRAND AVENUE
SUITE 3200
DES MOINES IA 50309-2721

In re Application of	:	
Schoen, et al.	:	
Serial No.: 12/545,139	:	Decision on Petition
Filed: August 21, 2009	:	
Attorney Docket No: **P08903US01**	:	

This letter is in response to the petition filed under 37 C.F.R. § 1.181 filed on August 16, 2011 requesting entry of the 1.132 Declaration of July 20, 2011 filed after final rejection.

BACKGROUND

The examiner mailed to applicants a non-final Office action on April 1, 2011. Claims 1-13 were pending and were rejected. Claims 1-13 were rejected under 35 U.S.C. 103 (a) as being unpatentable over Kataoka et al. and Huff et al. in view of publications from Cytodiagnostics Inc., Otogenetics Corp. and Sequetech Corp.

In response thereto, applicants submitted a Declaration under 1.132 and remarks on June 14, 2011 addressing the rejections set forth in the Office action of April 1, 2011.

The examiner mailed to applicants a final Office action on July 12, 2011. Claims 1-13, and newly added claims 14 were pending and were rejected. Claims 1-13 and newly added claim 14 were rejected under 35 U.S.C. 103 (a) as being unpatentable over Kataoka et al. and Huff et al. in view of publications from Cytodiagnostics Inc., Otogenetics Corp. and Sequetech Corp. The submitted Declaration under 1.132 was not considered as it was considered invalid due to the inventor statement.

On July 20, 2011, applicants submitted an after final amendment and a Declaration under 1.132.

On July 29, 2011, the examiner mailed to applicants an advisory action indicating that the Declaration under 1.132 would not be entered because applicant failed to provide a showing of good and sufficient reasons why it was not presented earlier.

On August 16, 2011, applicants submitted the petition currently under review.

DISCUSSION

The petition and file history have been carefully considered.

Applicants argue that that the Declaration filed under 1.132 should be entered and considered. Specifically, applicants point out "In view of the fact that the substance of the Rule 132 Declaration never changed, was submitted in the first instance responsive to the first Office Action and the corrected version was submitted in response to the Examiner's Final Rejection refusing to consider the first one, no changes other than the reference that he was a sole inventor to a joint inventor, it is submitted that the declaration was timely filed, should have been considered by the Examiner and should be part of the record for this appeal."

Applicants' argument is well-taken and found persuasive that the Declaration under 1.132 of July 20, 2011 was improperly denied consideration and entry.

DECISION

The petition is **GRANTED.** The advisory action mailed July 29, 2011, indicating that the Declaration under 1.132 of July 20, 2011 would not be entered is hereby **VACATED**.

The application will be forwarded to the examiner for consideration of the Declaration under 1.132 filed July 20, 2011 wherein the examiner will consider whether to allow the application in view of the Declaration or prepare a new advisory action indicating that the Declaration under 1.132 will be entered but the application still not allowed.

Should there be any questions about this decision please contact Marianne C. Seidel by letter addressed to Director, Technology Center 1600, at the address listed above, or by telephone at 571-272-1600 or by facsimile sent to the general Office facsimile number, 571-273-8300.

Jacqueline Stone
Director, Technology Center 1600

UNITED STATES PATENT AND TRADEMARK OFFICE

Commissioner for Patents
United States Patent and Trademark Office
P. O. Box 1450
Alexandria, VA 22313-1450
www.uspto.gov

MAILED

OCT 26 2010

OFFICE OF PETITIONS

WESTERNGECO L.L.C.
KEVIN MCENANEY, IP DEPT
10001 RICHMOND AVENUE
HOUSTON, TX 77042-4299

In re Application of	:	
Eskild Storteig et al	:	
Application No. 12/545,232	:	ON PETITION
Filed: August 21, 2009	:	
Attorney Docket No. 14.0482-US	:	

This is a decision on the petition under 37 CFR 1.137(b), filed September 30, 2010, to revive the above-identified application.

The petition is **GRANTED.**

The above-identified application became abandoned for failure to reply in a timely manner to the Notice To File Missing Parts of Nonprovisional Application (Notice) mailed September 9, 2009. The Notice set a period for reply of two (2) months from the mail date of the Notice. No extension of time under the provisions of 37 CFR 1.136(a) was obtained. Accordingly, the above-identified application became abandoned on November 10, 2009.

Telephone inquiries concerning this decision should be directed to Irvin Dingle at (571) 272-3210.

This matter is being referred to the Office of Patent Application Processing.

Irvin Dingle
Petitions Examiner
Office of Petitions

UNITED STATES PATENT AND TRADEMARK OFFICE

Commissioner for Patents
United States Patent and Trademark Office
P.O. Box 1450
Alexandria, VA 22313-1450
www.uspto.gov

TOWNSEND AND TOWNSEND AND CREW, LLP
TWO EMBARCADERO CENTER
EIGHTH FLOOR
SAN FRANCISCO CA 94111-3834

MAILED

DEC 15 2010

OFFICE OF PETITIONS

In re Application of	:	
Louise Wannier et al.	:	
Application No. 12/545,336	:	DECISION ON PETITION
Filed: August 21, 2009	:	TO WITHDRAW
Attorney Docket No. **026262-001510US**	:	FROM RECORD
	:	

This is a decision on the Request to Withdraw as attorney or agent of record under 37 CFR § 1.36(b), filed November 19, 2010.

The request is **APPROVED**.

A grantable request to withdraw as attorney/agent of record must be signed by every attorney/agent seeking to withdraw or contain a clear indication that one attorney is signing on behalf of another/others. The Office requires the practitioner(s) requesting withdrawal to certify that he, she, or they have: (1) given reasonable notice to the client, prior to the expiration of the response period, that the practitioner(s) intends to withdraw from employment; (2) delivered to the client or a duly authorized representative of the client all papers and property (including funds) to which the client is entitled; and (3) notified the client of any responses that may be due and the time frame within which the client must respond , pursuant to 37 CFR 10.40.

The request was signed by Philip H. Albert on behalf of all attorneys of record who are associated with Customer Number 20350.

All attorneys/agents associated with Customer Number 20350 have been withdrawn.

Applicant is reminded that there is no attorney of record at this time.

The correspondence address of record has been changed and all future correspondence will be directed to the assignee of the entire interest at the address indicated below.

There is an outstanding Office action mailed September 15, 2010, that requires a reply from the applicant.

Telephone inquiries concerning this decision should be directed to the undersigned at 571-272-4584.

/JoAnne Burke/
JoAnne Burke
Petitions Examiner
Office of Petitions

cc: MyShape, Inc.
210 W. Lexington Drive
Glendale, CA 91203

UNITED STATES PATENT AND TRADEMARK OFFICE

Commissioner for Patents
United States Patent and Trademark Office
P.O. Box 1450
Alexandria, VA 22313-1450
www.uspto.gov

GARDNER GROFF GREENWALD & VILLANUEVA. PC
2018 POWERS FERRY ROAD
SUITE 800
ATLANTA GA 30339

MAILED
AUG 30 2011
OFFICE OF PETITIONS

In re Application of	:	
Keith Howard, et al.	:	DECISION ON PETITION
Application No. 12/545,338	:	TO WITHDRAW
Filed: August 21, 2009	:	FROM RECORD
Attorney Docket No. **8J10.1-010**	:	

This is a decision on the request to withdraw as attorney of record under 37 CFR § 1.36, filed August 25, 2011.

The request is **NOT APPROVED**.

The request cannot be approved because it lacks a forwarding correspondence address of the first named inventor or a properly intervening assignee.

If the forwarding correspondence address is to the assignee, the Office will only accept correspondence address changes to the most current address information provided for the assignee of the entire interest *that properly became of record under 37 CFR 3.71.* 37 CFR 3.71(c) states:

> *An assignee becomes of record either in a national patent application or a reexamination proceeding by filing a statement in compliance with § 3.73(b) that is signed by a party who is authorized to act on behalf of the assignee.*

The assignee must establish its ownership of the patent to the satisfaction of the Director. In this regard, the statement under 37 CFR 3.73(b) must have either: (i) documentary evidence of a chain of title from the original owner to the assignee (*e.g.*, copy of an executed assignment), and a statement affirming that the documentary evidence of the chain of title from the original owner to the assignee was or concurrently is being submitted for recordation pursuant to § 3.11; or (ii) a statement specifying where documentary evidence of a chain of title from the original owner to the assignee is recorded in the assignment records of the Office (*e.g.*, reel and frame number).

All future communications from the Office will continue to be directed to the above-listed address until otherwise notified by applicant.

Telephone inquires concerning this decision should be directed to the undersigned at (571) 272-2991.

/Terri Johnson/
Terri Johnson
Petitions Examiner
Office of Petitions

cc: **JOE DESOUZA**
1376 YORK ROAD
NORTH ROYALTON, OH 44133

UNITED STATES PATENT AND TRADEMARK OFFICE

Commissioner for Patents
United States Patent and Trademark Office
P.O. Box 1450
Alexandria, VA 22313-1450
www.uspto.gov

GARDNER GROFF GREENWALD & VILLANUEVA, PC
2018 POWERS FERRY ROAD
SUITE 800
ATLANTA, GA 30339

MAILED

NOV 21 2011

OFFICE OF PETITIONS

In re Application of	:	
Keith Howard, et al.	:	
Application No. 12/545,338	:	DECISION ON PETITION
Filed: August 21, 2009	:	TO WITHDRAW
Attorney Docket No. 8J10.1-010	:	FROM RECORD
	:	

This is a decision on the renewed Request to Withdraw as attorney or agent of record under 37 C.F.R. § 1.36(b), filed October 27, 2011.

The request is **APPROVED**.

A grantable request to withdraw as attorney/agent of record must be signed by every attorney/agent seeking to withdraw or contain a clear indication that one attorney is signing on behalf of another/others. A request to withdraw will not be approved unless at least 30 (thirty) days would remain between the date of approval and the later of the expiration date of a time to file a response or the expiration date of the maximum time period which can be extended under 37 C.F.R. § 1.136(a).

The request was signed by Arthur A. Gardner on behalf of all attorneys of record. All attorneys/agents have been withdrawn. Applicant is reminded that there is no attorney of record at this time.

All future correspondence will be directed to the first named inventor Keith Howard at the address indicated below.

There is an outstanding Office action mailed October 31, 2011 that requires a reply from the applicant.

Telephone inquiries concerning this decision should be directed to Terri Johnson at 571-272-2991.

/Terri Johnson/
Terri Johnson
Petitions Examiner
Office of Petitions

cc: **Keith Howard**
800 Ople Arnold Road
Limestone, TN 37681

UNITED STATES PATENT AND TRADEMARK OFFICE

UNITED STATES DEPARTMENT OF COMMERCE
United States Patent and Trademark Office
Address: COMMISSIONER FOR PATENTS
P.O. Box 1450
Alexandria, Virginia 22313-1450
www.uspto.gov

APPLICATION NUMBER	FILING OR 371(C) DATE	FIRST NAMED APPLICANT	ATTY. DOCKET NO./TITLE
12/545,338	08/21/2009	Keith HOWARD	8J10.1-010

CONFIRMATION NO. 1122

POWER OF ATTORNEY NOTICE

23506
GARDNER GROFF GREENWALD & VILLANUEVA. PC
2018 POWERS FERRY ROAD
SUITE 800
ATLANTA, GA 30339

OC000000050881229

Date Mailed: 11/09/2011

NOTICE REGARDING CHANGE OF POWER OF ATTORNEY

This is in response to the Power of Attorney filed 10/27/2011.

- The withdrawal as attorney in this application has been accepted. Future correspondence will be mailed to the new address of record. 37 CFR 1.33.

/tsjohnson/

Office of Data Management, Application Assistance Unit (571) 272-4000, or (571) 272-4200, or 1-888-786-0101

UNITED STATES PATENT AND TRADEMARK OFFICE

Commissioner for Patents
United States Patent and Trademark Office
P.O. Box 1450
Alexandria, VA 22313-1450
www.uspto.gov

THE LAW OFFICES OF CALVIN B. WARD
18 CROW CANYON COURT, SUITE 305
SAN RAMON CA 94583

MAILED

DEC 06 2010

OFFICE OF PETITIONS

In re Application:	:	
Zhang et al.	:	
Application No. 12/545,358	:	ON PETITION
Filed: August 21, 2009	:	
Attorney Docket No. 54907	:	

This is a notice regarding your request for acceptance of a fee deficiency submission under 37 CFR 1.28 filed October 22, 2010.

On September 1, 1998, the Court of Appeals for the Federal Circuit held that 37 CFR 1.28(c) is the sole provision governing the time for correction of the erroneous payment of the issue fee as a small entity. **See DH Technology v. Synergystex International, Inc. 154 F.3d 1333, 47 USPQ2d 1865 (Fed. Cir. Sept. 1, 1998).**

The Office no longer investigates or rejects original or reissue applications under 37 CFR 1.56. **1098 Off. Gaz. Pat. Office 502 (January 3, 1989)**. Therefore, nothing in this Notice is intended to imply that an investigation was done.

Your fee deficiency submission under 37 CFR 1.28 is hereby **ACCEPTED**.

This application is no longer entitled to small entity status. Accordingly, all future fees paid in this application must be paid at the large entity rate.

Telephone inquires concerning this decision should be directed to the undersigned at (571) 272-7751.

Joan Olszewski
Petitions Examiner
Office of Petitions

UNITED STATES PATENT AND TRADEMARK OFFICE

UNITED STATES DEPARTMENT OF COMMERCE
United States Patent and Trademark Office
Address: COMMISSIONER FOR PATENTS
P.O. Box 1450
Alexandria, Virginia 22313-1450
www.uspto.gov

APPLICATION NO.	FILING DATE	FIRST NAMED INVENTOR	ATTORNEY DOCKET NO.	CONFIRMATION NO.
12/545,362	08/21/2009	Tsuyoshi SHIMIZU	KAS-7241	1172

7590 08/23/2011
MATTINGLY & MALUR, PC
1800 DIAGONAL ROAD
SUITE 370
ALEXANDRIA, VA 22314

EXAMINER
MAYO-PINNOCK, TARA LEIGH

ART UNIT	PAPER NUMBER
3671	

MAIL DATE	DELIVERY MODE
08/23/2011	PAPER

DECISION GRANTING PETITION UNDER 37 CFR 1.138(d)

The declaration of express abandonment is recognized

This is in response to the petition under 37 CFR 1.138(d), requesting for a refund of any previously paid search fee and excess claims fee in the above-identified application.

The petition is granted.

The express abandonment is recognized. Any previously paid search fee and excess claims fee are hereby refunded.

Telephone inquiries should be directed to the Office of Data Management at (571) 272-4200.

Nioni Farmer

Patent Publication Branch
Office of Data Management

FORM PET651G (Rev. 08/07)

UNITED STATES PATENT AND TRADEMARK OFFICE

Commissioner for Patents
United States Patent and Trademark Office
P.O. Box 1450
Alexandria, VA 22313-1450
www.uspto.gov

MAILED

NOV 05 2010

PCT LEGAL ADMINISTRATION

RADER, FISHMAN & GRAUER PLLC
39533 WOODWARD AVENUE
SUITE 140
BLOOMFIELD HILLS MI 48304-0610

In re Application of ELASSER et al.	:	
Application No.: 12/545,473	:	DECISION ON
PCT No.: PCT/EP08/52097	:	
Int. Filing: 21 February 2008	:	PETITION
Priority Date: 23 February 2007	:	
Attorney Docket No.: 66814-0065	:	
For: INTERNAL COMBUSTION ENGINE SYSTEM	:	

This is a decision on applicant's "RESPONSE TO COMMUNICATION AND IN THE ALTERNATIVE, A PETITION UNDER 37 CFR 1.78, 1.55 AND 1.57" filed in the United States Patent and Trademark Office (USPTO) on 09 February 2010.

BACKGROUND

On 21 August 2009, within the thirty month period, applicant filed a Transmittal Letter (Form PTO 1390) requesting entry into the U.S. national stage and paid the basic national fee as required by 35 U.S.C. 371(c).

On 17 September 2009, a Notice of Incomplete Nonprovisional Application was mailed to applicant indicating, *inter alia*, that the application was submitted without drawings and that an oath or declaration was required. On the same day, a Response to Request for Corrected Filing Receipt was mailed to applicant indicating, *inter alia*, that the application was submitted under 35 U.S.C. 111, rather than 371.

On 17 November 2009, applicant responded to the notice providing a declaration. On 30 December 2009, a Notice of Incomplete Nonprovisional Application was mailed to applicant indicating that the application was deposited without drawings under 35 U.S.C. 113.

On 09 February 2010, applicant filed a response to the communication.

DISCUSSION

Applicant states that the papers filed on 21 August 2009 were filed under 35 U.S.C. 371. However, the application type shown on the Electronic Filing Receipt for the 21 August 2009 submission is "Utility under 35 USC 111(a)".

The USPTO has adopted a bright-line test for determining whether application papers will be processed under 35 U.S.C. 371 or alternatively under 35 U.S.C. 111(a). Under this standard, any intended filing of an international application as a national stage application must clearly and unambiguously be identified as such and must satisfy all of the conditions set forth in 35 U.S.C. 371(c). See 37 CFR 1.495(g):

> The documents and fees submitted . . . must be clearly identified as a submission to enter the national stage under 35 U.S.C. 371. Otherwise the submission will be considered as being made under 35 U.S.C. 111(a).

In addition, section 1893.03(a) of the MPEP states the following:

> If there are any conflicting instructions as to whether the filing is under 35 U.S.C. 111(a) or 35 U.S.C. 371, the application will be accepted as filed under 35 U.S.C. 111(a).

Inspection of the instant application file reveals that the transmittal letter filed on 21 August 2009 referenced 35 U.S.C. 371, and indicated which international application sought to enter the national stage in the United States. However, on the Electronic Acknowledgement Receipt, applicant chose the application type shown for the 21 August 2009 EFS submission as "utility under 35 USC 111(a)".

The inclusion of these conflicting indications of applicant's intent in the materials filed on 21 August 2009 constitutes "conflicting instructions" which, pursuant to the MPEP, requires that the application be treated under 35 U.S.C. 111(a). Accordingly, the original papers deposited on 21 August 2009 will be treated as a filing under 35 U.S.C. 111(a). Applicant's request to treat the submission on 21 August 2009 as a submission under 35 U.S.C. 371 is DISMISSED. Applicant may wish to consider filing a petition under 37 CFR 1.78 to claim benefit to prior-filed applications.

With respect to the inclusion of the drawings, a review of the application file reveals that a drawing sheet (1/1) containing Figures 1 and 2 accompanied the originally filed papers on 21 August 2009. Therefore, these drawings are a part of the application as filed on 21 August 2009.

A review of the declaration submitted on 17 November 2009 reveals it is in compliance with 37 CFR 1.497(a) and (b) and is acceptable. Therefore, the Notice of Incomplete Nonprovisional Application mailed on 17 September 2010 is hereby vacated.

CONCLUSION

Applicant's request to treat the submission on 21 August 2009 as a submission under 35 U.S.C. 371 is DISMISSED without prejudice. In view of the above, it is proper to treat the initial filing as a

filing under 35 U.S.C. 111(a). The drawings filed on 21 August 2009 are part of the application as filed. The declaration filed on 17 November 2009 is acceptable.

This application is being referred to the National Stage Processing Branch of the office of PCT Operations for removal of all Article 20 papers and processing of the above referenced application as a U.S. application filed under 35 U.S.C. 111(a) with a filing date of 21 August 2009.

/Cynthia M. Kratz/
Cynthia M. Kratz
Attorney Advisor
PCT Legal Office
Office of PCT Legal Administration
Telephone: (571) 272-3286

UNITED STATES PATENT AND TRADEMARK OFFICE

Commissioner for Patents
United States Patent and Trademark Office
P.O. Box 1450
Alexandria, VA 22313-1450
www.uspto.gov

MAILED

MAY 02 2011

PCT LEGAL ADMINISTRATION

RADER, FISHMAN & GRAUER PLLC
39533 WOODWARD AVENUE
SUITE 140
BLOOMFIELD HILLS MI 48304-0610

In re Application of ELASSER et al.	:	
Application No.: 12/545,473	:	DECISION ON
Filing Date: 21 August 2009	:	PETITION UNDER
Attorney Docket No.: 66814-0065	:	37 CFR 1.78 AND 1.55
For: INTERNAL COMBUSTION ENGINE SYSTEM	:	

This is in response to applicant's petition filed on 15 November 2010.

The petition under 37 CFR 1.78 is **DISMISSED**.

A petition for acceptance of a claim for late priority under 37 CFR 1.78(a)(3) is only applicable to those applications filed on or after November 29, 2000. Further, the petition is appropriate only after the expiration of the period specified in 37 CFR 1.78(a)(2)(ii). In addition, the petition under 37 CFR 1.78(a)(3) must be accompanied by:

(1) the reference required by 35 U.S.C. § 120 and 37 CFR 1.78(a)(2)(i) of the prior-filed application, unless previously submitted;

(2) the surcharge set forth in § 1.17(t); and

(3) a statement that the entire delay between the date the claim was due under 37 CFR 1.78(a)(2)(ii) and the date the claim was filed was unintentional. The Director may require additional information where there is a question whether the delay was unintentional.

The instant petition does not comply with item (1).

37 CFR 1.78(a)(2)(i) requires that any nonprovisional application claiming the benefit of one or more prior-filed copending nonprovisional applications must contain or be amended to contain a reference to each such prior-filed application, identifying it by application number (consisting of the series code and

serial number) and indicating the relationship of the applications. The relationship between the applications is whether the subject application is a continuation, divisional, or continuation-in-part of a prior-filed nonprovisional application. A reference properly specifying the relationship between international application PCT/EP2008/052097 and the present added to the specification to comply with 37 CFR is needed since the proper relationship, which includes the type of continuing application, is not stated. See Manual of Patent Examining Procedure, (8th ed., Revision 7 (July 2008)), Section 201.11, Reference to Prior Application(s).

Furthermore, the reference to add the prior-filed applications on page one of the specification following the title of the invention is not acceptable as drafted since it improperly incorporates by reference the prior-filed applications. An incorporation by reference statement added after an application's filing date is not effective because no new matter can be added to an application after its filing date (*see* 35 U.S.C. § 132(a)). If an incorporation by reference statement is included in an amendment to the specification to add a benefit claim under 35 U.S.C. § 120 after the filing date of the application, the amendment would not be proper. When a benefit claim under 35 U.S.C. § 120 is submitted after the filing of an application, the reference to the prior application cannot include an incorporation by reference statement of the prior application. *See* Dart Industries v. Banner, 636 F.2d 684, 207 USPQ 273 (C.A.D.C. 1980). *Note* MPEP §§ 201.06(c) and 608.04(b).

Item (2), the petition fee of $ 1410, will be charged to applicant's deposit account per his authorization.

Item (3) has not been satisfied as the statement "that the entire delay between the date the claim was due under 37 CFR 1.78(a)(2)(ii) and the date the claim was filed was unintentional" was not provided.

With respect to applicant's petition under 37 CFR 1.55, such petition is not needed because applicant made a timely claim in the Application Data Sheet filed on August 21, 2009. Thus, applicant's petition under 37 CFR 1.55 is **DISMISSED AS MOOT**.

Accordingly, before the petition under 37 CFR § 1.78(a)(3) can be granted, U.S. application 12/545,473 must be amended to include the proper reference as discussed above.

Any further correspondence with respect to this matter may be filed electronically via EFS-Web selecting the document description "Petition for review and processing by the PCT Legal Office";

By mail: Mail Stop PCT LEGAL ADMINISTRATION
Commissioner for Patents
Post Office Box 1450
Alexandria, VA 22313-1450

By hand: Customer Window located at:

Mail Stop PCT
Randolph Building
401 Dulany Street
Alexandria, VA 22314

By fax: 571-273-0459
ATTN: Office of PCT Legal Administration

Any questions concerning this matter may be directed to Cynthia Kratz at (571) 272-3286.

/Bryan Lin/
Bryan Lin
PCT Legal Examiner
Office of PCT Legal Administration

UNITED STATES PATENT AND TRADEMARK OFFICE

Commissioner for Patents
United States Patent and Trademark Office
P.O. Box 1450
Alexandria, VA 22313-1450
www.uspto.gov

MAILED

JUL 08 2011

PCT LEGAL ADMINISTRATION

RADER, FISHMAN & GRAUER PLLC
39533 WOODWARD AVENUE
SUITE 140
BLOOMFIELD HILLS MI 48304-0610

In re Application of ELASSER et al.	:	
Application No.: 12/545,473	:	DECISION ON
Filing Date: 21 August 2009	:	PETITION UNDER
Attorney Docket No.: 66814-0065	:	37 CFR 1.78(a)(3)
For: INTERNAL COMBUSTION ENGINE SYSTEM	:	

This is in response to applicant's "Response to Decision on Petition" pursuant to 37 CFR 1.78(a)(3) filed in the United States Patent and Trademark Office (USPTO) on 05 May 2011 to accept an unintentionally delayed claim under 35 U.S.C. §120 for the benefit of priority to the international application identified in the concurrently filed amendment to the specification.

At the time of filing the present application, applicant did not make a proper claim for domestic priority. Thus, the filing of a petition under 37 CFR 1.78(a)(3) is necessary. Such petition is hereby **GRANTED**.

A petition for acceptance of a claim for late priority under 37 CFR 1.78(a)(3) is only applicable to those applications filed on or after November 29, 2000. Further, the petition is appropriate only after the expiration of the period specified in 37 CFR 1.78(a)(2)(ii). In addition, the petition under 37 CFR 1.78(a)(3) must be accompanied by:

(1) the reference required by 35 U.S.C. § 120 and 37 CFR 1.78(a)(2)(i) of the prior-filed application, unless previously submitted;

(2) the surcharge set forth in § 1.17(t); and

(3) a statement that the entire delay between the date the claim was due under 37 CFR 1.78(a)(2)(ii) and the date the claim was filed was unintentional. The Director may require additional information where there is a question whether the delay was unintentional.

The petition complies with the requirements for a grantable petition under 37 CFR 1.78(a)(3) in that (1) a reference to the prior-filed nonprovisional application has been included in an amendment to the first sentence of the specification following the title, as provided by 37 CFR 1.78(a)(2)(iii); (2) the surcharge set forth in § 1.17(t)[1]; and (3) the petition contains a proper statement of unintentional delay.

[1] Applicant submitted $400 on 9 February 2010, which was insufficient as the fee for a petition under 37 CFR 1.78 as required by 37 CFR 1.17(t) is $1410. The difference will be charged to applicant's deposit account per

Accordingly, having found that the petition for acceptance of an unintentionally delayed claim for the benefit of priority under 35 U.S.C. §§ 120 to the prior-filed nonprovisional application satisfies the conditions of 37 CFR 1.78(a)(3), the petition is granted.

The granting of the petition to accept the delayed benefit claim to the prior-filed application under 37 CFR 1.78(a)(3) should not be construed as meaning that this instant application is entitled to the benefit of the prior-filed application. In order for this application to be entitled to the benefit of the prior-filed application, all other requirements under 35 U.S.C. §120 and 37 CFR 1.78(a)(1) and (a)(2) must be met. Similarly, the fact that any Filing Receipt includes the prior-filed application should not be construed as meaning that applicant is entitled to the claim for benefit of priority to the prior-filed application noted thereon. Accordingly, the examiner will, in due course, consider this benefit claim and determine whether this application is entitled to the benefit of the earlier filing date.

Any inquiries concerning this decision may be directed to Cynthia M. Kratz at (571) 272-3286. All other inquiries concerning either the examination procedures or status of the application should be directed to the Technology Center.

This matter is being referred to the Office of Patent Application Processing for appropriate action. The examiner will consider applicant's entitlement to claim benefit of priority under 35 U.S.C. 120 to the prior-filed nonprovisional application in due course.

/Bryan Lin/
Bryan Lin
Legal Examiner
Office of Petitions

---

his authorization.

PTO/SB/20PCT-KR (06-10)
Approved for use through 01/31/2012. OMB 0651-0058
U.S. Patent and Trademark Office; U. S. DEPARTMENT OF COMMERCE
Under the Paperwork Reduction Act of 1995, no persons are required to respond to a collection of information unless it displays a valid OMB control number.

REQUEST FOR PARTICIPATION IN THE PATENT COOPERATION TREATY - PATENT PROSECUTION HIGHWAY (PCT-PPH) PILOT PROGRAM BETWEEN THE KOREAN INTELLECTUAL PROPERTY OFFICE (KIPO) AND THE USPTO

Application No:	12/545,504	Filing date:	08-21-2009
First Named Inventor:	Gregory Mooradian		
Title of the Invention:	SYSTEM AND METHOD FOR DETECTING A CAMERA		

THIS REQUEST FOR PARTICIPATION IN THE PCT-PPH PILOT PROGRAM ALONG WITH THE REQUIRED DOCUMENTS MUST BE SUBMITTED VIA EFS-WEB. INFORMATION REGARDING EFS-WEB IS AVAILABLE AT HTTP://WWW.USPTO.GOV/EBC/EFS_HELP.HTML

APPLICANT HEREBY REQUESTS PARTICIPATION IN THE PCT-PPH PROGRAM AND PETITIONS TO MAKE THE ABOVE-IDENTIFIED APPLICATION SPECIAL UNDER THE PCT-PPH PROGRAM.

The above-identified application is (1) a national stage entry of the corresponding PCT application, or (2) a national stage entry of another PCT application which claims priority to the corresponding PCT application, or (3) a national application that claims domestic/ foreign priority to the corresponding PCT application, or (4) a national application which forms the basis for the priority claim in the corresponding PCT application, or (5) a continuing application of a U.S. application that satisfies one of (1) to (4) above, or (6) a U.S. application that claims domestic benefit to a U.S. provisional application which forms the basis for the priority claim in the corresponding PCT application.

The corresponding PCT application number(s) is/are: PCT/US2009/054860

The international filing date of the corresponding PCT application(s) is/are: 08-25-2009

I. List of Required Documents:

a. **A copy of the latest international work product (WO/ISA, WO/IPEA, or IPER) in the above–identified corresponding PCT application(s)**

☐ Is attached.

☑ Is not attached because the document is already in the U.S. application.

b. **A copy of all claims which were indicated as having novelty, inventive step and industrial applicability in the above-identified corresponding PCT application(s).**

☐ Is attached.

☑ Is not attached because the document is already in the U.S. application.

c. **English translations of the documents in a. and b. above are attached (if the documents are not in the English language). A statement that the English translation is accurate is attached for the document in b. above.**

This collection of information is required by 35 U.S.C. 119, 37 CFR 1.55, and 37 CFR 1.102(d). The information is required to obtain or retain a benefit by the public, which is to file (and by the USPTO to process) an application. Confidentiality is governed by 35 U.S.C. 122 and 37 CFR 1.11 and 1.14. This collection is estimated to take 2 hours to complete, including gathering, preparing, and submitting the completed application form to the USPTO. Time will vary depending upon the individual case. Any comments on the amount of time you require to complete this form and/or suggestions for reducing this burden should be sent to the Chief Information Officer, U.S. Patent and Trademark Office, U.S. Department of Commerce, P.O. Box 1450, Alexandria, VA 22313-1450. DO NOT SEND FEES OR COMPLETED FORMS TO THIS ADDRESS.

Approved for use through 01/31/2012. OMB 0651-0058
U.S.Patent and Trademark Office; U.S. DEPARTMENT OF COMMERCE

Under the Paperwork Reduction Act of 1995, no persons are required to respond to a collection of information unless it displays a valid OMB control number.

REQUEST FOR PARTICIPATION IN THE PCT-PPH PILOT PROGRAM BETWEEN THE KIPO AND THE USPTO

(continued)

Application No.:	12/545,504
First Named Inventor:	Gregory Mooradian

d. **(1) An information disclosure statement listing the documents cited in the international work products (ISR, WO/ISA, WO/IPEA, IPER) of the corresponding PCT application.**

☐ Is attached

☑ Has already been filed in the above-identified U.S. application on 05-17-2010

(2) Copies of all documents (except) for U.S. patents or U.S. patent application publications)

☐ Are attached.

☑ Have already been filed in the above-identified U.S. application on 05-17-2010

II. Claims Correspondence Table:

Claims in US Application	Patentable Claims in the corresponding PCT Application	Explanation regarding the correspondence
1	1	Identical
2	2	Identical
3	3	Identical
4	4	Identical
5	5	Identical
6	6	Identical
7	7	Identical
8	8	Identical
9	9	Identical
10	10	Identical
11	11	Identical
12	12	Identical
13	13	Identical
14	14	Identical
15	15	Identical
16	16	Identical
17	17	Identical
18	18	Identical
19	19	Identical

III. All the claims in the US application sufficiently correspond to the patentable claims in the corresponding PCT application.

Signature Marlo M. Schepper	Date February 18, 2011
Name (Print/Typed) Marlo M. Schepper	Registration Number 57,194

II. Claims Correspondence Table (cont.):		
Claims in U.S. application	Patentable Claims in the corresponding PCT Application	Explanation regarding the correspondence
20	20	Identical
21	21	Identical
22	22	Identical
23	23	Identical
24	24	Identical
25	25	Identical

UNITED STATES PATENT AND TRADEMARK OFFICE

UNITED STATES DEPARTMENT OF COMMERCE
United States Patent and Trademark Office
Address: COMMISSIONER FOR PATENTS
P.O. Box 1450
Alexandria, Virginia 22313-1450
www.uspto.gov

APPLICATION NO.	FILING DATE	FIRST NAMED INVENTOR	ATTORNEY DOCKET NO.	CONFIRMATION NO.
12/545,504	08/21/2009	Gregory Mooradian	11913-124 US	1485

26486 7590 03/29/2011
BURNS & LEVINSON, LLP
125 SUMMER STREET
BOSTON, MA 02110

EXAMINER
YE, LIN

ART UNIT	PAPER NUMBER
2622	

NOTIFICATION DATE	DELIVERY MODE
03/29/2011	ELECTRONIC

Please find below and/or attached an Office communication concerning this application or proceeding.

The time period for reply, if any, is set in the attached communication.

Notice of the Office communication was sent electronically on above-indicated "Notification Date" to the following e-mail address(es):

docketing@burnslev.com

UNITED STATES PATENT AND TRADEMARK OFFICE

Commissioner for Patents
United States Patent and Trademark Office
P.O. Box 1450
Alexandria, VA 22313-1450
www.uspto.gov

BURNS & LEVINSON, LLP
125 SUMMER STREET
BOSTON MA 02110

In re Application of	:	
MOORADIAN, GREGORY, et al.	:	DECISION ON REQUEST TO
Application No. 12/545,504	:	PARTICIPATE IN PATENT
Filed: August 21, 2009	:	PROSECUTION HIGHWAY
Attorney Docket No. **11913-124 US**	:	PROGRAM AND PETITION
	:	TO MAKE SPECIAL UNDER
	:	37 CFR 1.102(a)

This is a decision on the request to participate in the PCT Patent Prosecution Highway (PPH) pilot program and the petition under 37 CFR 1.102(a), filed February 18, 2011 to make the above-identified application special.

The request and petition are **DISMISSED**.

A grantable request to participate in the PCT-PPH pilot program and petition to make special require:

(1) The U.S. application be (a) a national stage entry of the corresponding PCT application, or (b) a national stage entry of another PCT application which claims priority to the corresponding PCT application, or (c) a national stage application that claims domestic/foreign priority to the corresponding PCT application, (d) a national application which forms the basis for the priority claim in the corresponding PCT application, or (e) a continuation application of the U.S. application which satisfies one of the above (a) to (d) scenarios.
(2) A copy of the latest international work product (WO/ISA, WO/IPEA, or IPER) in the corresponding PCT application(s) which indicates at least one claim in the PCT application has novelty, inventive step, and industrial applicability.
(3) A copy of all claims which were indicated as having novelty, inventive step and industrial applicability in the corresponding PCT application(s).
(4) English translations of the documents in (2) and (3) (if the documents are not in the English language).
(5) All the claims in the U.S. application must sufficiently correspond or be amended to sufficiently correspond to the claims which were indicated as having novelty, inventive step, and industrial applicability in the corresponding PCT application(s).
(6) Examination of the U.S. application has not begun; and

(7) An information disclosure statement listing the documents cited in the international work products (ISR, WO/ISA. WO/IPEA, IPER) of the corresponding PCT application(s) and copies of all of the documents cited in the international work products of the PCT application (unless copies have already been filed in the U.S. application) corresponding to the U.S. application except U.S. patents or U.S. patent application publications.

The request to participate in the PCT-PPH pilot program and petition is deficient as follows:

Petitioner has not complied with items 3 and 5 above.

Regarding item 3, petitioner has checked the box on form PTO/SB/20PCT-KR which indicates that a copy of all claims which were indicated as having novelty, inventive step and industrial applicability in the corresponding PCT/US09/054860 is not attached because the document is already in the US application. However, a review of the file record indicates no copy has been submitted in this instant application. Therefore, Petitioner has not provided a copy of all claims which were indicated as having novelty, inventive step and industrial applicability in the corresponding PCT/US09/054860.

Regarding item 5, without a copy of all claims indicated as having novelty, inventive step and industrial applicability in the corresponding PCT application, it cannot be determined if the claims of the US application sufficiently corresponds to the claims of the PCT application.

Applicant is given a time period of **ONE MONTH or THIRTY DAYS**, whichever is longer, from the mailing date of this decision to correct the deficiencies. **NO EXTENSION OF TIME UNDER 37 CFR 1.136 IS PERMITTED.** If the deficiencies are not corrected with the time period given, the application will await action in its regular turn.

Any response must be submitted via EFS-web.

Telephone inquiries concerning this decision should be directed to Ken Wieder at 571-272-2986.

All other inquiries concerning the examination or status of the application should be directed to Patent Application Information Retrieval (PAIR) system.

/Kenneth A. Wieder/

Kenneth A. Wieder
Quality Assurance Specialist
Technology Center 2600
Communications

Attorney Docket No. 11913-124

IN THE UNITED STATES PATENT AND TRADEMARK OFFICE

Applicant(s): Gregory Mooradian et al.
Application Serial Number: 12/545,504
Filed: August 21, 2009
For: SYSTEM AND METHOD FOR DETECTING A CAMERA

Examiner: TBD
Group Art Unit: 2624
Confirm. No.: 1485

Burns & Levinson LLP
125 Summer Street
Boston, MA 02110
(617) 345-3000

To: Attn: Kenneth A. Wieder
Office of Petitions
Mail Stop Petitions
Commissioner for Patents
P.O. Box 1450
Alexandria, VA 22313-1450

RENEWED REQUEST AND PETITION UNDER 37 C.F.R. 1.102(a)

Sir:

In response to the Decision on Request to Participate in Patent Prosecution Highway Program and Petition to Make Special Under 37 C.F.R. 1.102(a) mailed on March 29, 2011 in the above-referenced patent application, Applicants transmit herewith a copy of all claims which were indicated as having novelty, inventive step and industrial applicability in the corresponding PCT application.

Since all requirements for a grantable request to participate in the PCT-PPH pilot program have now been submitted, Applicants respectfully request that this Renewed Request and Petition be granted.

The Director of Patents and Trademarks is hereby authorized to charge any fees which may be required for the submission of this renewed petition, and any deficiencies, to or credit any overpayment, to Deposit Account No. 03-2410, Order No. 44379-102.

Respectfully submitted,
Gregory Mooradian et al., Applicants

Dated: April 12, 2011

By: Marlo M. Schepper
Marlo M. Schepper
Reg. No. 47,194
Agent for Applicants

1. A system for detecting an optical device, comprising:

an illumination system for illuminating a target area;

an image acquisition system for capturing a first image of the target area on the same axis as the illumination system and for capturing a second image of the target area on a different axis from the illumination system; and

a processor and computer readable media having computer code for causing a processor to identify retro-reflections in the target area by analyzing the first image and the second image.

2. The system of claim 1 further comprising a beam splitter wherein:

the image acquisition system comprises a camera; and

the illumination system comprises on-axis illuminator for illuminating a target area on the same axis as the camera and an off-axis illuminator for illuminating a target area on a different axis from the camera.

3. The system of claim 1 further comprising a beam splitter and a moveable mirror wherein:

the image acquisition system comprises a camera; and

the illumination system comprises a dual-axis illuminator;

wherein when the moveable mirror is in a first position the dual-axis illuminator illuminates the target area on the same axis as the camera and when the moveable mirror is in a second position the dual-axis illuminator illuminates the target area on a different axis from the camera.

4. The system of claim 1 further comprising a beam splitter wherein:

the illumination system comprises an illuminator; and

the image acquisition system comprises an on-axis camera for capturing an image of the target area on the same axis as the illuminator and an off-axis camera for capturing an image of the target area on a different axis from the illuminator.

5. The system of claim 1 wherein the computer code for causing a processor to identify retro-reflections filters the first image to isolate retro-reflections.

6. The system of claim 5 wherein the computer code for causing a processor to identify retro-reflections filters the first image to isolate retro-reflections by applying a low pass filter and applying a high pass filter.

7. The system of claim 5 further comprising an image acquisition system for capturing a third image of the non-illuminated target area and wherein the computer code for causing a processor to identify retro-reflections subtracts the third image from the first image before it filters the first image to isolate retro-reflections.

8. The system of claim 7 wherein the computer code for causing a processor to identify retro-reflections creates an image mask and applies the image mask to the first image after it filters the first image to isolate retro-reflections.

9. The system of claim 8 wherein the image mask comprises:
a maximum image created using the second image and the third image.

10. The system of claim 8 wherein the computer code for causing a processor to identify retro-reflections applies a low pass filter to the image mask and applies a high pass filter to the image mask before it applies the image mask.

11. The system of claim 8 wherein the computer code for causing a processor to identify retro-reflections magnifies the image mask to separate the foreground from the background in the image mask before it applies the image mask.

12. The system of claim 8 wherein the computer code for causing a processor to identify retro-reflections applies a histogram of thresholds to the image mask before it applies the image mask

13. The system of claim 8 wherein the computer code for causing a processor to identify retro-reflections separates the foreground from the background in the first image after it applies the image mask.

14. The system of claim 13 wherein the computer code for causing a processor to identify retro-reflections separates features in the foreground in the first image larger than a predetermined size.

15. The system of claim 1 wherein the illumination system comprises an LED light.

16. The system of claim 15 wherein the LED light pulses in periods of less than approximately 5 milliseconds.

17. The system of claim 15 further comprising a steering mirror that directs the LED light.

18. The system of claim 1 further comprising a filter adjacent to the image acquisition system.

19. The system of claim 1 further comprising a forensic image acquisition system for acquiring a forensic image of a person when an optical device is detected.

20. The system of claim 1 further comprising a user alert system for alerting a user when an optical device is detected.

21. The system of claim 1 wherein the processor and computer readable media are remote from the illumination system.

22. The system of claim 21 wherein the processor and computer readable media communicate with more than one image acquisition system.

23. A method of detecting an optical device, comprising the steps of:

(a) acquiring a first image of a target area on the same axis as an illumination source;

(b) acquiring a second image of the target area on a different axis from the illumination source; and

(c) identifying retro-reflections in the target area by analyzing the first image and the second image by:

filtering the first image;

creating an image mask using the second image;

applying the image mask to the first image; and

separating features in the foreground in the first image larger than a predetermined size.

24. The method of claim 23 wherein the target area is a movie theater.

25. A system for detecting an optical device, comprising:

means for illuminating a target area with illumination;

means for capturing a first image of the target area on the same axis as the illumination;

means for capturing a second image of the target area on a different axis from the illumination;

a processor and computer readable media having computer code for causing a processor to identify retro-reflections in the target area by:

filtering the first image;

creating an image mask using the second image;

applying the image mask to the first image; and

separating features in the foreground in the first image larger than a predetermined size.

UNITED STATES PATENT AND TRADEMARK OFFICE

UNITED STATES DEPARTMENT OF COMMERCE
United States Patent and Trademark Office
Address: COMMISSIONER FOR PATENTS
P.O. Box 1450
Alexandria, Virginia 22313-1450
www.uspto.gov

APPLICATION NO.	FILING DATE	FIRST NAMED INVENTOR	ATTORNEY DOCKET NO.	CONFIRMATION NO.
12/545,504	08/21/2009	Gregory Mooradian	11913-124 US	1485

26486 7590 05/06/2011
BURNS & LEVINSON, LLP
125 SUMMER STREET
BOSTON, MA 02110

EXAMINER
YE, LIN

ART UNIT	PAPER NUMBER
2622	

NOTIFICATION DATE	DELIVERY MODE
05/06/2011	ELECTRONIC

Please find below and/or attached an Office communication concerning this application or proceeding.

The time period for reply, if any, is set in the attached communication.

Notice of the Office communication was sent electronically on above-indicated "Notification Date" to the following e-mail address(es):

docketing@burnslev.com

UNITED STATES PATENT AND TRADEMARK OFFICE

Commissioner for Patents
United States Patent and Trademark Office
P.O. Box 1450
Alexandria, VA 22313-1450
www.uspto.gov

BURNS & LEVINSON, LLP
125 SUMMER STREET
BOSTON MA 02110

In re Application of	:	
MOORADIAN, GREGORY, et al.	:	DECISION ON REQUEST TO
Application No. 12/545,504	:	PARTICIPATE IN PATENT
Filed: August 21, 2009	:	PROSECUTION HIGHWAY
Attorney Docket No.: **11913-124 US**	:	PROGRAM AND PETITION
	:	TO MAKE SPECIAL UNDER
	:	37 CFR 1.102(a)

This is a decision on the renewed request to participate in the Patent Prosecution Highway (PPH) program and the petition under 37 CFR 1.102(a), filed April 12, 2011, to make the above-identified application special.

The request and petition are **GRANTED**.

A grantable request to participate in the PPH program and petition to make special require:

(1) The U.S. application must validly claim priority under 35 U.S.C. 119(a) to one or more applications filed in the KIPO;
(2) Applicant must submit a copy of the allowable/patentable claim(s) from the KIPO application(s) along with an English translation thereof and a statement that the English translation is accurate;
(3) All the claims in the U.S. application must sufficiently correspond or be amended to sufficiently correspond to the allowable/patentable claim(s) in the KIPO application(s);
(4) Examination of the U.S. application has not begun;
(5) Applicant must submit a copy of all the office actions from each of the KIPO application(s) containing the allowable/patentable claim(s) along with an English translation thereof and a statement that the English translation is accurate; and
(6) Applicant must submit an IDS listing the documents cited by the KIPO examiner in the KIPO office action along with copies of documents except U.S. patents or U.S. patent application publications.

The request to participate in the PPH program and petition comply with the above requirements. Accordingly, the above-identified application has been accorded "special" status.

Telephone inquiries concerning this decision should be directed to Kenneth Wieder at 571-272-2986.

All other inquiries concerning the examination or status of the application should be directed to Patent Application Information Retrieval (PAIR) system.

The application is being forwarded to the examiner for action on the merits commensurate with this decision.

/Kenneth A. Wieder/

Kenneth Wieder
Quality Assurance Specialist
Technology Center 2600
Communications

UNITED STATES PATENT AND TRADEMARK OFFICE

Commissioner for Patents
United States Patent and Trademark Office
P.O. Box 1450
Alexandria, VA 22313-1450
www.uspto.gov

HOUSTON ELISEEVA
420 BEDFORD ST
SUITE 155
LEXINGTON MA 02420

MAILED

AUG 24 2010

OFFICE OF PETITIONS

In re Application of	:	
Peter Genrievich Lokhov	:	
Application No. 12/545,518	:	DECISION ON PETITION
Filed: August 21, 2009	:	
Attorney Docket No. 0228.0001US1	:	

This is a decision on the petition under the unintentional provisions of 37 CFR 1.137(b), filed July 13, 2010, to revive the above-identified application.

The petition is **GRANTED**.

The application became abandoned for failure to reply in a timely manner to the Notice to File Missing Parts of Nonprovisional Application (Notice), mailed September 10, 2009. The Notice set a period for reply of two (2) months from the mail date of the Notice. No extensions of time under the provisions of 37 CFR 1.136(a) were obtained. Accordingly, the application became abandoned on November 11, 2009. The Notice of Abandonment was mailed May 21, 2010.

The petition satisfies the requirements of 37 CFR 1.137(b) in that petitioner has supplied (1) the reply in the form of a properly signed declaration, an English translation of the specification and the $130 fee, replacement drawings, the $65 surcharge, the $82 basic filing fee, the $270 search fee and the $110 examination fee, (2) the petition fee of $810, and (3) a proper statement of unintentional delay.

Telephone inquiries concerning this decision should be directed to Terri Johnson at (571) 272-2991.

This application is being referred to the Office of Patent Application Processing for appropriate action on the reply received.

Terri Johnson

Terri Johnson
Petitions Examiner
Office of Petitions

UNITED STATES PATENT AND TRADEMARK OFFICE

Commissioner for Patents
United States Patent and Trademark Office
P.O. Box 1450
Alexandria, VA 22313-1450
www.uspto.gov

HOUSTON ELISEEVA
420 BEDFORD ST
SUITE 155
LEXINGTON MA 02420

MAILED

AUG 02 2010

OFFICE OF PETITIONS

In re Application of	:	
Peter Genrievich Lokhov	:	
Application No. 12/545,560	:	DECISION ON PETITION
Filed: August 21, 2009	:	
Attorney Docket No. 0228.0002US1	:	

This is a decision on the petition under the unintentional provisions of 37 CFR 1.137(b), filed July 13, 2010, to revive the above-identified application.

The petition is **GRANTED**.

The application became abandoned for failure to reply in a timely manner to the Notice to File Missing Parts of Nonprovisional Application (Notice), mailed September 9, 2009. The Notice set a period for reply of two (2) months from the mail date of the Notice. No extensions of time under the provisions of 37 CFR 1.136(a) were obtained. Accordingly, the application became abandoned on November 10, 2009.

The petition satisfies the requirements of 37 CFR 1.137(b) in that petitioner has supplied (1) the reply in the form of the $82 basic filing fee, a properly signed oath or declaration, $130 English translation fee, replacement drawings, $110 examination fee and $270 search fee, (2) the petition fee of $810, and (3) a proper statement of unintentional delay.

It is not apparent whether the person signing the statement of unintentional delay was in a position to have firsthand or direct knowledge of the facts and circumstances of the delay at issue. Nevertheless, such statement is being treated as having been made as the result of a reasonable inquiry into the facts and circumstances of such delay. See 37 CFR 10.18(b) and Changes to Patent Practice and Procedure; Final Rule Notice, 62 Fed. Reg. 53131, 53178 (October 10, 1997), 1203 Off. Gaz. Pat. Office 63, 103 (October 21, 1997). In the event that such an inquiry has not been made, petitioner must make such an inquiry. If such inquiry results in the discovery that it is not correct that the entire delay in filing the required reply from the due date for the reply until the filing of a grantable petition pursuant to 37 CFR 1.137(b) was unintentional, petitioner must notify the Office.

There is no indication that the person signing the petition was ever given a power of attorney to prosecute the application. If the person signing the petition desires to receive future correspondence regarding this application, the appropriate power of attorney document must be submitted. While a courtesy copy of this decision is being mailed to the person signing the petition, all future correspondence will be directed to the address currently of record until appropriate instructions are received.

Telephone inquiries concerning this decision should be directed to Terri Johnson at (571) 272-2991.

This application is being referred to the Office of Patent Application Processing for appropriate action on the reply received.

Terri Johnson
Petitions Examiner
Office of Petitions

cc: **Maria M. Eliseeva**
4 Militia Drive, Suite 4
Lexington, MA 02421

UNITED STATES PATENT AND TRADEMARK OFFICE

Commissioner for Patents
United States Patent and Trademark Office
P.O. Box 1450
Alexandria, VA 22313-1450
www.uspto.gov

THE NATH LAW GROUP
112 SOUTH WEST STREET
ALEXANDRIA, VA 22314

MAILED

DEC 20 2010

OFFICE OF PETITIONS

In re Application of	:	DECISION ON PETITION
Robson Splane	:	TO WITHDRAW
Application No. 12/545,627	:	FROM RECORD
Filed: August 21, 2009	:	
Attorney Docket No. 90875UX	:	

This is a decision on the Request to Withdraw as attorney or agent of record under 37 C.F.R. § 1.36(b), filed November 23, 2010.

The request is **APPROVED**.

A grantable request to withdraw as attorney/agent of record must be signed by every attorney/agent seeking to withdraw or contain a clear indication that one attorney is signing on behalf of another/others. The Office will require the practitioner(s) to certify that he, she or they have: (1) given reasonable notice to the client, prior to the expiration of the reply period, which the practitioner(s) intends to withdraw from employment; (2) delivered to the client or a duly authorized representative of the client all papers and property (including funds) to which the client is entitled; and (3) notified the client of any replies that may be due and the time frame within which the client must respond, pursuant to 37 CFR 10.40 (c).

The request was signed by Laurie A. Axford, on behalf of the practitioners of record associated with Customer No. 20529.

Customer Number 20529 has been withdrawn as attorney of record. Applicant is reminded that there is no attorney of record at this time.

There is an outstanding Notice of Allowance mailed December 10, 2010 that requires a reply from the applicant.

As no change of correspondence address was indicated therefore, the address will remain unchanged.

Telephone inquires concerning this decision should be directed to the undersigned at (571) 272-6059. All other inquires concerning either the examination or status of the application should be directed to the Technology Center.

A. Kelley

Alicia Kelley
Petitions Examiner
Office of Petitions

UNITED STATES PATENT AND TRADEMARK OFFICE

UNITED STATES DEPARTMENT OF COMMERCE
United States Patent and Trademark Office
Address: COMMISSIONER FOR PATENTS
P.O. Box 1450
Alexandria, Virginia 22313-1450
www.uspto.gov

APPLICATION NUMBER	FILING OR 371(C) DATE	FIRST NAMED APPLICANT	ATTY. DOCKET NO./TITLE
12/545,627	08/21/2009	Robson SPLANE	90875UX

CONFIRMATION NO. 1732

POWER OF ATTORNEY NOTICE

20529
THE NATH LAW GROUP
112 South West Street
Alexandria, VA 22314

OC000000045057292

Date Mailed: 12/20/2010

NOTICE REGARDING CHANGE OF POWER OF ATTORNEY

This is in response to the Power of Attorney filed 11/23/2010.

- The withdrawal as attorney in this application has been accepted. Future correspondence will be mailed to the new address of record. 37 CFR 1.33.

/atkelley/

Office of Data Management, Application Assistance Unit (571) 272-4000, or (571) 272-4200, or 1-888-786-0101

UNITED STATES PATENT AND TRADEMARK OFFICE

Commissioner for Patents
United States Patent and Trademark Office
P.O. Box 1450
Alexandria, VA 22313-1450
www.uspto.gov

ANDREW B. HUANG
28442 LOMO DR.
RANCHO P.V CA 90275

MAILED
JAN 17 2012
OFFICE OF PETITIONS

In re Application of :
Huang :
Application No. 12/545,630 : ON PETITION
Filed: August 21, 2009 :
Attorney Docket No.

This is a decision on the petition under 37 CFR 1.137(a), filed December 21, 2011, to revive the above-identified application.

The petition under 37 CFR 1.137(a) is **DISMISSED**.

The above-identified application became abandoned for failure to reply to the non-final Office action mailed December 21, 2010, which set a shortened statutory period for reply of three (3) month from its mailing date. No response was received within the allowable period, and the application became abandoned on March 22, 2011. A Notice of Abandonment was mailed on November 3, 2011.

A grantable petition under 37 CFR 1.137(a)[1] must be accompanied by: (1) the required reply,[2] unless previously filed; (2) the petition fee as set forth in 37 CFR 1.17(1); (3) a showing to the satisfaction of the Commissioner that the entire delay in filing the required reply from the due date for the reply until the filing of a grantable petition pursuant to this paragraph was unavoidable; and (4) any terminal disclaimer required by 37 CFR 1.137(c).

The instant petition lacks item (3).

The Commissioner is responsible for determining the standard for unavoidable delay and for applying that standard.

"In the specialized field of patent law, . . . the Commissioner of Patent and Trademarks is

[1]As amended effective December 1, 1997. See Changes to Patent Practice and Procedure; Final Rule Notice 62 Fed. Reg. 53131, 53194-95 (October 10, 1997), 1203 Off. Gaz. Pat. Office 63, 119-20 (October 21, 1997).

[2] In a nonprovisional application abandoned for failure to prosecute, the required reply may be met by the filing of a continuing application. In an application or patent, abandoned or lapsed for failure to pay the issue fee or any portion thereof, the required reply must be the payment of the issue fee or any outstanding balance thereof.

primarily responsible for the application and enforcement of the various narrow and technical statutory and regulatory provisions. The Commissioner's interpretation of those provisions is entitled to considerable deference."[3]

"[T]he Commissioner's discretion cannot remain wholly uncontrolled, if the facts **clearly** demonstrate that the applicant's delay in prosecuting the application was unavoidable, and that the Commissioner's adverse determination lacked **any** basis in reason or common sense."[4]

"The court's review of a Commissioner's decision is 'limited, however, to a determination of whether the agency finding was arbitrary, capricious, an abuse of discretion, or otherwise not in accordance with the law.'"[5]
"The scope of review under the arbitrary and capricious standard is narrow and a court is not to substitute its judgment for that of the agency."[6]

The standard

"[T]he question of whether an applicant's delay in prosecuting an application was unavoidable must be decided on a case-by-case basis, taking all of the facts and circumstances into account."[7]

The general question asked by the Office is: "Did petitioner act as a reasonable and prudent person in relation to his most important business?"[8] Nonawarness of a PTO rule will not constitute unavoidable delay.[9]

---

[3]Rydeen v. Quigg, 748 F.Supp. 900, 904, 16 U.S.P.Q.2d (BNA) 1876 (D.D.C. 1990), aff'd without opinion (Rule 36), 937 F.2d 623 (Fed. Cir.1991) (citing Morganroth v. Quigg, 885 F.2d 843, 848, 12 U.S.P.Q.2d (BNA) 1125 (Fed. Cir. 1989); Ethicon, Inc. v. Quigg 849 F.2d 1422, 7 U.S.P.Q.2d (BNA 1152 (Fed. Cir. 1988) ("an agency' interpretation of a statute it administers is entitled to deference"); see also Chevron U.S.A. Inc. v. Natural Resources Defence Council, Inc., 467 U.S. 837, 844, 81 L. Ed. 694, 104 S. Ct. 2778 (1984) ("if the statute is silent or ambiguous with respect to the specific issue, the question for the court is whether the agency's answer is based on a permissible construction of the statute.")

[4]Commissariat A L'Energie Atomique et al. v. Watson, 274 F.2d 594, 597, 124 U.S.P.Q. (BNA) 126 (D.C. Cir. 1960) (emphasis added).

[5]Haines v. Quigg, 673 F. Supp. 314, 316, 5 U.S.P.Q.2d (BNA) 1130 (N.D. Ind. 1987) (citing Camp v. Pitts, 411 U.S. 138, 93 S. Ct.1241, 1244 (1973) (citing 5 U.S.C. §706 (2)(A)); Beerly v. Dept. of Treasury, 768 F.2d 942, 945 (7th Cir. 1985); Smith v. Mossinghoff, 217 U.S. App. D.C. 27, 671 F.2d 533, 538 (D.C. Cir.1982)).

[6]Ray v. Lehman, 55 F.3d 606, 608, 34 U.S.P.Q2d (BNA) 1786 (Fed. Cir. 1995) (citing Motor Vehicles Mfrs. Ass'n v. State Farm Mut. Auto. Ins. Co., 463 U.S. 29, 43, 77 L.Ed.2d 443, 103 S. Ct. 2856 (1983)).

[7]Id.

[8]See In re Mattulah, 38 App. D.C. 497 (D.C. Cir. 1912).

[9]See Smith v. Mossinghoff, 671 F.2d 533, 538, 213 U.S.P.Q. (BNA) 977 (Fed. Cir. 1982) (citing Potter v. Dann, 201 U.S.P.Q. (BNA) 574 (D.D.C. 1978) for the proposition that counsel's nonawarness of PTO rules does not constitute "unavoidable" delay)). Although court decisions have only addressed the issue of lack of knowledge of an attorney, there is no reason to expect a different result due to lack of knowledge on the part of a pro se (one who prosecutes on his own) applicant. It would be inequitable for a court to determine that a client who spends his hard earned money on an attorney who happens not to know a specific rule should be held to a higher standard than a pro se applicant who makes (or is forced to make) the decision to file the application without the assistance of counsel.

Application of the standard to the current facts and circumstances

In the instant petition, petitioner maintains that the circumstances leading to the abandonment of the application meet the aforementioned unavoidable standard and, therefore, petitioner qualifies for relief under 37 CFR 1.137(a). In support thereof, petitioner asserts that petitioner attempted to file a response via EFS-Web, but a problem between petitioner's computer and the USPTO server prevented the response from being uploaded.

With regard to item (3) above, the aforementioned argument of petitioner in support of petitioner's belief that the above-cited application was unavoidably abandoned is not persuasive. The reason petitioner's argument must necessarily fail is addressed below.

Petitioner is required to file a timely and complete response to the Office action within the allowable period. Failure of the response to upload in the USPTO EFS-Web system where said failure results from applicant's error or a computer error on applicant's part is usually not a cause for unavoidable delay. In some instances, computer failure may be a cause for unavoidable delay where the computer failure was enduring and there was no other way for applicant to file a timely response, i.e.; via facsimile or mail, or where there is a documented failure in the EFS-Web system on the date and time applicant establishes that the transmission was attempted. In this instance, however, it appears that the computer failure was not enduring, but a temporary glitch. Applicant has not established that there was a failure of the EFS-Web system at the time and date the transmission was attempted. Further, applicant has not asserted that there was no other way to file a proper reply. Lastly, the failure of applicant to realize that the response had not been properly uploaded is not a cause for unavoidable delay. Applicant has not made a showing that the entire delay—from the due date for a reply to the non-final Office action until the filing of a grantable petition—was unavoidable. The petition is dismissed, accordingly.

Alternatively, petitioner may revive the application based on unintentional abandonment under 37 CFR 1.137(b) (enclosed). A grantable petition pursuant to 37 CFR 1.137(b) must be accompanied by the required reply, the required petition fee ($1,860.00 for a large entity and $930.00 for a verified small entity), and a statement that the entire delay in filing the required reply from the due date for the reply until the filing of a grantable petition pursuant to 37 CFR 1.137(b) was unintentional.

Further correspondence with respect to this matter should be addressed as follows:

By mail: Commissioner for Patents
United States Patent and Trademark Office
Box 1450
Alexandria, VA 22313-1450

By facsimile: (571) 273-8300
Attn: Office of Petitions

Telephone inquiries regarding this decision should be directed to the undersigned (571) 272-3222.

/Kenya A. McLaughlin/

Kenya A. McLaughlin
Petitions Attorney
Office of Petitions

UNITED STATES PATENT AND TRADEMARK OFFICE

OPAP IAP5 JAN 27 2012 PATENT & TRADEMARK OFFICE

Commissioner for Patents
United States Patent and Trademark Office
P.O. Box 1450
Alexandria, VA 22313-1450
www.uspto.gov

ANDREW B. HUANG
28442 LOMO DR.
RANCHO P.V CA 90275

MAILED
JAN 17 2012
OFFICE OF PETITIONS

In re Application of :
Huang :
Application No. 12/545,630 :
Filed: August 21, 2009 :
Attorney Docket No.

ON PETITION

This is a decision on the petition under 37 CFR 1.137(a), filed December 21, 2011, to revive the above-identified application.

The petition under 37 CFR 1.137(a) is **DISMISSED**.

The above-identified application became abandoned for failure to reply to the non-final Office action mailed December 21, 2010, which set a shortened statutory period for reply of three (3) month from its mailing date. No response was received within the allowable period, and the application became abandoned on March 22, 2011. A Notice of Abandonment was mailed on November 3, 2011.

A grantable petition under 37 CFR 1.137(a)[1] must be accompanied by: (1) the required reply,[2] unless previously filed; (2) the petition fee as set forth in 37 CFR 1.17(1); (3) a showing to the satisfaction of the Commissioner that the entire delay in filing the required reply from the due date for the reply until the filing of a grantable petition pursuant to this paragraph was unavoidable; and (4) any terminal disclaimer required by 37 CFR 1.137(c).

The instant petition lacks item (3).

The Commissioner is responsible for determining the standard for unavoidable delay and for applying that standard.

"In the specialized field of patent law, . . . the Commissioner of Patent and Trademarks is

[1] As amended effective December 1, 1997. See Changes to Patent Practice and Procedure; Final Rule Notice 62 Fed. Reg. 53131, 53194-95 (October 10, 1997), 1203 Off. Gaz. Pat. Office 63, 119-20 (October 21, 1997).

[2] In a nonprovisional application abandoned for failure to prosecute, the required reply may be met by the filing of a continuing application. In an application or patent, abandoned or lapsed for failure to pay the issue fee or any portion thereof, the required reply must be the payment of the issue fee or any outstanding balance thereof.

primarily responsible for the application and enforcement of the various narrow and technical statutory and regulatory provisions. The Commissioner's interpretation of those provisions is entitled to considerable deference."[3]

"[T]he Commissioner's discretion cannot remain wholly uncontrolled, if the facts **clearly** demonstrate that the applicant's delay in prosecuting the application was unavoidable, and that the Commissioner's adverse determination lacked **any** basis in reason or common sense."[4]

"The court's review of a Commissioner's decision is 'limited, however, to a determination of whether the agency finding was arbitrary, capricious, an abuse of discretion, or otherwise not in accordance with the law.'"[5]
"The scope of review under the arbitrary and capricious standard is narrow and a court is not to substitute its judgment for that of the agency."[6]

The standard

"[T]he question of whether an applicant's delay in prosecuting an application was unavoidable must be decided on a case-by-case basis, taking all of the facts and circumstances into account."[7]

The general question asked by the Office is: "Did petitioner act as a reasonable and prudent person in relation to his most important business?"[8] Nonawareness of a PTO rule will not constitute unavoidable delay.[9]

---

[3]Rydeen v. Quigg, 748 F.Supp. 900, 904, 16 U.S.P.Q.2d (BNA) 1876 (D.D.C. 1990), aff'd without opinion (Rule 36), 937 F.2d 623 (Fed. Cir.1991) (citing Morganroth v. Quigg, 885 F.2d 843, 848, 12 U.S.P.Q.2d (BNA) 1125 (Fed. Cir. 1989); Ethicon, Inc. v. Quigg 849 F.2d 1422, 7 U.S.P.Q.2d (BNA 1152 (Fed. Cir. 1988) ("an agency' interpretation of a statute it administers is entitled to deference"); see also Chevron U.S.A. Inc. v. Natural Resources Defence Council. Inc., 467 U.S. 837, 844, 81 L. Ed. 694, 104 S. Ct. 2778 (1984) ("if the statute is silent or ambiguous with respect to the specific issue, the question for the court is whether the agency's answer is based on a permissible construction of the statute.")

[4]Commissariat A L'Energie Atomique et al. v. Watson, 274 F.2d 594, 597, 124 U.S.P.Q. (BNA) 126 (D.C. Cir. 1960) (emphasis added).

[5]Haines v. Quigg, 673 F. Supp. 314, 316, 5 U.S.P.Q.2d (BNA) 1130 (N.D. Ind. 1987) (citing Camp v. Pitts, 411 U.S. 138, 93 S. Ct.1241, 1244 (1973) (citing 5 U.S.C. §706 (2)(A)); Beerly v. Dept. of Treasury, 768 F.2d 942, 945 (7th Cir. 1985); Smith v. Mossinghoff, 217 U.S. App. D.C. 27, 671 F.2d 533, 538 (D.C. Cir.1982)).

[6]Rav v. Lehman, 55 F.3d 606, 608, 34 U.S.P.Q2d (BNA) 1786 (Fed. Cir. 1995) (citing Motor Vehicles Mfrs. Ass'n v. State Farm Mut. Auto. Ins. Co., 463 U.S. 29, 43, 77 L.Ed.2d 443, 103 S. Ct. 2856 (1983)).

[7]Id.

[8]See In re Mattulah, 38 App. D.C. 497 (D.C. Cir. 1912).

[9]See Smith v. Mossinghoff, 671 F.2d 533, 538, 213 U.S.P.Q. (BNA) 977 (Fed. Cir. 1982) (citing Potter v. Dann, 201 U.S.P.Q. (BNA) 574 (D.D.C. 1978) for the proposition that counsel's nonawareness of PTO rules does not constitute "unavoidable" delay)). Although court decisions have only addressed the issue of lack of knowledge of an attorney, there is no reason to expect a different result due to lack of knowledge on the part of a pro se (one who prosecutes on his own) applicant. It would be inequitable for a court to determine that a client who spends his hard earned money on an attorney who happens not to know a specific rule should be held to a higher standard than a pro se applicant who makes (or is forced to make) the decision to file the application without the assistance of counsel.

Application of the standard to the current facts and circumstances

In the instant petition, petitioner maintains that the circumstances leading to the abandonment of the application meet the aforementioned unavoidable standard and, therefore, petitioner qualifies for relief under 37 CFR 1.137(a). In support thereof, petitioner asserts that petitioner attempted to file a response via EFS-Web, but a problem between petitioner's computer and the USPTO server prevented the response from being uploaded.

With regard to item (3) above, the aforementioned argument of petitioner in support of petitioner's belief that the above-cited application was unavoidably abandoned is not persuasive. The reason petitioner's argument must necessarily fail is addressed below.

Petitioner is required to file a timely and complete response to the Office action within the allowable period. Failure of the response to upload in the USPTO EFS-Web system where said failure results from applicant's error or a computer error on applicant's part is usually not a cause for unavoidable delay. In some instances, computer failure may be a cause for unavoidable delay where the computer failure was enduring and there was no other way for applicant to file a timely response, i.e.; via facsimile or mail, or where there is a documented failure in the EFS-Web system on the date and time applicant establishes that the transmission was attempted. In this instance, however, it appears that the computer failure was not enduring, but a temporary glitch. Applicant has not established that there was a failure of the EFS-Web system at the time and date the transmission was attempted. Further, applicant has not asserted that there was no other way to file a proper reply. Lastly, the failure of applicant to realize that the response had not been properly uploaded is not a cause for unavoidable delay. Applicant has not made a showing that the entire delay—from the due date for a reply to the non-final Office action until the filing of a grantable petition—was unavoidable. The petition is dismissed, accordingly.

Alternatively, petitioner may revive the application based on unintentional abandonment under 37 CFR 1.137(b) (enclosed). A grantable petition pursuant to 37 CFR 1.137(b) must be accompanied by the required reply, the required petition fee ($1,860.00 for a large entity and $930.00 for a verified small entity), and a statement that the entire delay in filing the required reply from the due date for the reply until the filing of a grantable petition pursuant to 37 CFR 1.137(b) was unintentional.

Further correspondence with respect to this matter should be addressed as follows:

By mail: Commissioner for Patents
United States Patent and Trademark Office
Box 1450
Alexandria, VA 22313-1450

By facsimile: (571) 273-8300
Attn: Office of Petitions

Telephone inquiries regarding this decision should be directed to the undersigned (571) 272-3222.

/Kenya A. McLaughlin/

Kenya A. McLaughlin
Petitions Attorney
Office of Petitions

UNITED STATES PATENT AND TRADEMARK OFFICE

Commissioner for Patents
United States Patent and Trademark Office
P.O. Box 1450
Alexandria, VA 22313-1450
www.uspto.gov

ANDREW B. HUANG
28442 LOMO DR.
RANCHO P.V CA 90275

MAILED
FEB 13 2012
OFFICE OF PETITIONS

In re Application of

Huang :

Application No. 12/545,630

: DECISION ON PETITION

Filed: August 21, 2009

:

Attorney Docket No.

This is a decision on the petition under 37 CFR 1.137(b), filed January 27, 2012, to revive the above-identified application.

The petition is **GRANTED**.

The above-cited application became abandoned for failure to reply in a timely manner to the non-final Office action mailed December 21, 2010, which set a shortened statutory period for reply of three (3) months from its mailing date. No extension of time pursuant to 37 CFR 1.136(a) was obtained within the allowable period. Accordingly, the application became abandoned on March 22, 2011. A Notice of Abandonment was mailed November 3, 2011.

The amendment filed January 27, 2012, is noted.

The application is being forwarded to Technology Center 3600, GAU 3673 for further processing.

Telephone inquiries concerning this decision should be directed to the undersigned at (571) 272-3222.

/Kenya A. McLaughlin/

Kenya A. McLaughlin
Petitions Attorney
Office of Petitions

UNITED STATES PATENT AND TRADEMARK OFFICE

Commissioner for Patents
United States Patent and Trademark Office
P.O. Box 1450
Alexandria, VA 22313-1450
www.uspto.gov

HITACHI C/O WAGNER BLECHER LLP
123 WESTRIDGE DRIVE
WATSONVILLE CA 95076

MAILED
JAN 03 2011
OFFICE OF PETITIONS
ON PETITION

In re Application of :
Takeuchi :
Application No. 12/545,685 :
Filed: August 21, 2009 :
Attorney Docket No. **HJP920070148US1** :

This is a decision on the petition under 37 CFR 1.137(b), filed November 22, 2010, to revive the above-identified application.

The petition is **GRANTED**.

The application became abandoned on November 3, 2009, for failure to respond to the Notice to File Corrected Application Papers mailed September 2, 2009.

The petition satisfies the requirements of 37 CFR 1.137(b) in that petitioner has supplied (1) the reply in the form of a replacement drawing sheet; (2) the petition fee of $1620.00, and (3) an adequate statement of unintentional delay.

Telephone inquiries concerning this decision should be directed to the undersigned at (571) 272-3222.

The application file is being directed to the Office of Patent Application Processing further processing.

/Kenya A. McLaughlin/

Kenya A. McLaughlin
Petitions Attorney
Office of Petitions

UNITED STATES PATENT AND TRADEMARK OFFICE

Commissioner for Patents
United States Patent and Trademark Office
P.O. Box 1450
Alexandria, VA 22313-1450
www.uspto.gov

WONG, CABELLO, LUTSCH, RUTHERFORD & BRUCCULERI, L.
20333 SH 249
6TH FLOOR
HOUSTON, TX 77070

MAILED

JUN 13 2011

OFFICE OF PETITIONS

In re Application of	:	
Kowalski, Vincent Joseph	:	
Application No. 12/545,753	:	DECISION ON PETITION
Filed: August 21, 2009	:	TO WITHDRAW
Attorney Docket No. 0081-172001	:	FROM RECORD

This is a decision on the Request to Withdraw as attorney or agent of record under 37 C.F.R. § 1.36(b), filed May 17, 2011.

The request is **NOT APPROVED** as moot.

A review of the file record indicates that the power of attorney to the attorneys/agents associated with Customer Number 29855 has been revoked by the assignee of the patent application on June 2, 2011. Accordingly, the request to withdraw under 37 C.F.R. § 1.36(b) is moot.

All future communications from the Office will continue to be directed to the below-listed address until otherwise notified by applicant.

Telephone inquires concerning this decision should be directed to the undersigned at 571-272-3206.

/Liana Walsh/
Liana Walsh
Petitions Examiner
Office of Petitions

cc: Brake Hughes Bellermann LLP
c/o CPA Global
P.O. Box 52050
Minneapolis MN 55402

UNITED STATES PATENT AND TRADEMARK OFFICE

Commissioner for Patents
United States Patent and Trademark Office
P.O. Box 1450
Alexandria, VA 22313-1450
www.uspto.gov

Ulric Todman
118 West 120th Street
New York NY 10027

MAILED

JAN 03 2011

OFFICE OF PETITIONS

In re Application of:
ULRIC TODMAN
Application No. 12/545,756
Filing Date: October 13, 2009

DECISION ON PETITION

This is a decision on the petition under the unintentional provisions of 37 CFR 1.137(b), filed on December 6, 2010, to revive the above-identified application.

The petition is **GRANTED**.

The above-identified application became abandoned for failure to file a proper reply in a timely manner to the Notice to File Missing Parts of Nonprovisional Application mailed October 21, 2009, which set a shortened statutory period for reply of two (2) months. No extensions of time under the provisions of 37 CFR 1.136(a) was obtained. Accordingly, the above-identified application became abandoned on December 22, 2009. The Notice of Abandonment was mailed June 25, 2010.

The petition satisfies the requirements of 37 CFR 1.137(b) in that petitioner has supplied (1) the reply in the form of the required fees, (2) the petition fee of $810, and (3) a proper statement of unintentional delay.

Telephone inquiries concerning this decision should be directed to Terri Johnson at 571-272-2991.

The application is being referred to the Office of Patent Application Processing for further processing.

/Terri Johnson/
Terri Johnson
Petitions Attorney
Office of Petitions

UNITED STATES PATENT AND TRADEMARK OFFICE

Commissioner for Patents
United States Patent and Trademark Office
P.O. Box 1450
Alexandria, VA 22313-1450
www.uspto.gov

HITACHI C/O WAGNER BLECHER LLP
123 WESTRIDGE DRIVE
WATSONVILLE CA 95076

MAILED
DEC 20 2010
OFFICE OF PETITIONS

In re Application of	:	
Masaki Yoshioka et al.	:	
Application No. 12/545,773	:	ON PETITION
Filed: August 21, 2009	:	
Attorney Docket No. **HJP920080036US1**	:	

This is a decision on the petition under the unintentional provisions of 37 CFR 1.137(b), filed November 22, 2010, to revive the above-identified application.

The petition is **GRANTED**.

The application became abandoned for failure to reply in a timely manner to the Notice to File Missing Parts of Nonprovisional Application (Notice), mailed September 2, 2009. The Notice set a period for reply of two (2) months from the mail date of the Notice. No extensions of time under the provisions of 37 CFR 1.136(a) were obtained. The application became abandoned on November 3, 2009.

The petition satisfies the requirements of 37 CFR 1.137(b) in that petitioner has supplied (1) the reply in the form of an oath or declaration, and surcharge, (2) the petition fee of $1,620 (3) a proper statement of unintentional delay.

Telephone inquiries concerning this decision should be directed to JoAnne Burke at 571-272-4584.

This application is being referred to the Office of Patent Application Processing.

/JoAnne Burke/
JoAnne Burke
Petitions Examiner
Office of Petitions

UNITED STATES PATENT AND TRADEMARK OFFICE

Commissioner for Patents
United States Patent and Trademark Office
P.O. Box 1450
Alexandria, VA 22313-1450
www.uspto.gov

HITACHI C/O WAGNER BLECHER LLP
123 WESTRIDGE DRIVE
WATSONVILLE CA 95076

MAILED

DEC 06 2010

OFFICE OF PETITIONS

In re Application of :
Yoshiju Watanabe et al. :
Application No. 12/545,788 : ON PETITION
Filed: August 21, 2009 :
Attorney Docket Number: HJP920080049US1 :

This is a decision on the petition filed November 19, 2010 under 37 CFR 1.137(b), to revive the above-identified application.

The petition is **GRANTED**.

The instant application became abandoned on November 3, 2009, for failure to timely reply to the Notice to File Missing Parts, mailed September 2, 2009, which set a two (2) month shortened statutory period for reply. No extensions of the time for reply in accordance with 37 CFR 1.136(a) were obtained. Accordingly, a Notice of Abandonment was mailed May 18, 2010.

The filing of the response to the Notice to File Missing Parts mailed September 2, 2009 is acknowledged.

All other requirements having been met, this matter is being referred to the Office of Patent Application Processing for further pre-examination processing.

Telephone inquiries concerning this matter may be directed to the undersigned Petitions Attorney at (571) 272-3212.

Patricia Faison-Ball

Patricia Faison-Ball
Senior Petitions Attorney
Office of Petitions

PATENT COOPERATION TREATY

From the INTERNATIONAL SEARCHING AUTHORITY

To:

GROOVER ROBERT O.

GROOVER & ASSOCIATES P.O. BOX 802889 DALLAS TX 75380 USA

RECEIVED MAY 2010

PCT

NOTIFICATION OF TRANSMITTAL OF THE INTERNATIONAL SEARCH REPORT AND THE WRITTEN OPINION OF THE INTERNATIONAL SEARCHING AUTHORITY, OR THE DECLARATION

(PCT Rule 44.1)

	Date of mailing *(day/month/year)* 22 APRIL 2010 (22.04.2010)
Applicant's or agent's file reference MXP-025PCT	**FOR FURTHER ACTION** See paragraphs 1 and 4 below
International application No. **PCT/US2009/054739**	International filing date *(day/month/year)* **24 AUGUST 2009 (24.08.2009)**
Applicant **MAXPOWER SEMICONDUCTOR INC. et al**	

1. ☒ The applicant is hereby notified that the international search report and the written opinion of the International Searching Authority have been established and are transmitted herewith.
   Filing of amendments and statement under Article 19:
   The applicant is entitled, if he so wishes, to amend the claims of the international application (see Rule 46):
   When? The time limit for filing such amendments is normally two months from the date of transmittal of the international search report.
   Where? Directly to the International Bureau of WIPO, 34 chemin des Colombettes 1211 Geneva 20, Switzerland, Facsimile No.: +41 22 338 82 70
   For more detailed instructions, see the notes on the accompanying sheet.

2. ☐ The applicant is hereby notified that no international search report will be established and that the declaration under Article 17(2)(a) to that effect and the written opinion of the International Searching Authority are transmitted herewith.

3. ☐ **With regard to any protest** against payment of (an) additional fee(s) under Rule 40.2, the applicant is notified that:
   ☐ the protest together with the decision thereon has been transmitted to the International Bureau together with the applicant's request to forward the texts of both the protest and the decision thereon to the designated Offices.
   ☐ no decision has been made yet on the protest; the applicant will be notified as soon as a decision is made.

4. **Reminders**

Shortly after the expiration of **18 months** from the priority date, the international application will be published by the International Bureau. If the applicant wishes to avoid or postpone publication, a notice of withdrawal of the international application, or of the priority claim, must reach the International Bureau as provided in Rules 90*bis* 1 and 90*bis*.3, respectively, before the completion of the technical preparations for international publication.

The applicant may submit comments on an informal basis on the written opinion of the International Searching Authority to the International Bureau. The International Bureau will send a copy of such comments to all designated Offices unless an international preliminary examination report has been or is to be established. These comments would also be made available to the public but not before the expiration of 30 months from the priority date.

Within **19 months** from the priority date, but only in respect of some designated Offices, a demand for international preliminary examination must be filed if the applicant wishes to postpone the entry into the national phase **until 30 months** from the priority date (in some Offices even later); otherwise, the applicant must, **within 20 months** from the priority date, perform the prescribed acts for entry into the national phase before those designated Offices.

In respect of other designated Offices, the time limit of **30 months** (or later) will apply even if no demand is filed within 19 months.

See the Annex to Form PCT/IB/301 and, for details about the applicable time limits, Office by Office, see the *PCT Applicant's Guide*, National Chapters.

Name and mailing address of the ISA/KR Korean Intellectual Property Office Government Complex-Daejeon, 139 Seonsa-ro, Seo-gu, Daejeon 302-701, Republic of Korea Facsimile No. 82-42-472-7140	Authorized officer COMMISSIONER Telephone No. 82-42-481-5131

NOTES TO FORM PCT/ISA/220

These Notes are intended to give the basic instructions concerning the filing of amendments under Article 19. The Notes are based on the requirements of the Patent Cooperation Treaty, the Regulations and the Administrative Instructions under that Treaty. In case of discrepancy between these Notes and those requirements, the latter are applicable. For more detailed information, see also the *PCT Applicant's Guide*.

In these Notes, "Article", "Rule" and "Section" refer to the provisions of the PCT, the PCT Regulations and the PCT Administrative Instructions, respectively.

INSTRUCTIONS CONCERNING AMENDMENTS UNDER ARTICLE 19

The applicant has, after having received the international search report and the written opinion of the International Searching Authority, one opportunity to amend the claims of the international application. It should however be emphasized that, since all parts of the international application (claims, description and drawings) may be amended during the international preliminary examination procedure, there is usually no need to file amendments of the claims under Article 19 except where, e.g. the applicant wants the latter to be published for the purposes of provisional protection or has another reason for amending the claims before international publication. Furthermore, it should be emphasized that provisional protection is available in some States only (see *PCT Applicant's Guide*, Annex B).

The attention of the applicant is drawn to the fact that ammendments to the claims under Article 19 are not allowed where the International Searching Authority has declared, under Article 17(2), that no international search report would be established (see *PCT Applicant's Guide*, paragraph 296).

What parts of the international application may be amended ?

Under Article 19, only the claims may be amended.

During the international phase, the claims may also be amended (or further amended) under Article 34 before the International Preliminary Examining Authority. The description and drawings may only be amended under Article 34 before the International Preliminary Examining Authority.

Upon entry into the national phase, all parts of the international application may be amended under Article 28 or, where applicable, Article 41.

When ? Within 2 months from the date of transmittal of the international search report or 16 months from the priority date, whichever time limit expires later. It should be noted, however, that the amendments will be considered as having been received on time if they are received by the International Bureau after the expiration of the applicable time limit but before the completion of the technical preparations for international publication (Rule 46.1).

Where not to file the amendments ?

The amendments may only be filed with the International Bureau and not with the receiving Office or the International Searching Authority (Rule 46.2).

Where a demand for international preliminary examination has been/is filed, see below.

How ? Either by cancelling one or more entire claims, by adding one or more new claims or by amending the text of one or more of the claims as filed.

A replacement sheet or sheets containing a complete set of claims in replacement of all the claims previously filed must be submitted.
Where a claim is cancelled, no renumbering of the other claims is required. In all cases where claims are renumbered, they must be renumbered consecutively in Arabic numerals (Section 205(a)).

The amendments must be made in the language in which the international application is to be published.

What documents must/may accompany the amendments ?

Letter (Section 205(b)):
The amendments must be submitted with a letter.
The letter will not be published with the international application and the amended claims. It should not be confused with the "Statement under Article 19(1)" (see below,under "Statement under Article 19(1)").
The letter must be in English or French, at the choice of the applicant. However, if the language of the international application is English, the letter must be in English; if the language of the international application is French, the letter must be in French.

NOTES TO FORM PCT/ISA/220 (continued)

The letter must indicate the differences between the claims as filed and the claims as amended. It must, in particular, indicate, in connection with each claim appearing in the international application (it being understood that identical indications concerning several claims may be grouped), whether

(i) the claim is unchanged,
(ii) the claim is cancelled;
(iii) the claim is new;
(iv) the claim replaces one or more claims as filed;
(v) the claim is the result of the division of a claim as filed.

The following examples illustrate the manner in which amendments must be explained in the accompanying letter:

1. [Where originally there were 48 claims and after amendment of some claims there are 51]:
   "Claims 1 to 29, 31, 32, 34, 35, 37 to 48 replaced by amended claims bearing the same numbers; claims 30, 33 and 36 unchanged; new claims 49 to 51 added."
2. [Where originally there were 15 claims and after amendment of all claims there are 11]:
   "Claims 1 to 15 replaced by amended claims 1 to 11."
3. [Where originally there were 14 claims and the amendments consist in cancelling some claims and in adding new claims]:
   "Claims 1 to 6 and 14 unchanged; claims 7 to 13 cancelled; new claims 15, 16 and 17 added." or
   "Claims 7 to 13 cancelled; new claims 15, 16 and 17 added; all other claims unchanged."
4. [Where various kinds of amendments are made]:
   "Claims 1 - 10 unchanged; claims 11 to 13, 18 and 19 cancelled; claims 14, 15 and 16 replaced by amended claim 14; claim 17 subdivided into amended claims 15, 16 and 17; new claims 20 and 21 added."

"Statement under Article 19(1)" (Rule 46.4)

The amendments may be accompanied by a statement explaining the amendments and indicating any impact that such amendments might have on the description and the drawings (which cannot be amended under Article 19(1)).

The statement will be published with the international application and the amended claims.

It must be in the language in which the international application is to be published.

It must be brief, not exceeding 500 words if in English or if translated into English.

It should not be confused with and does not replace the letter indicating the differences between the claims as filed and as amended. It must be filed on a separate sheet and must be indentified as such by a heading, preferably by using the words "Statement under Article 19(1)."

It may not contain any disparaging comments on the international search report or the relevance of citations contained in that report. Reference to citations, relevant to a given claim, contained in the international search report may be made only in connection with an amendment of that claim.

Consequence if a demand for international preliminary examination has already been filed

If, at the time of filing any amendments and any accompanying statement, under Article 19, a demand for international preliminary examination has already been submitted, the applicant must preferably, at the time of filing the amendments (and any statement) with the International Bureau, also file with the International Preliminary Examining Authority a copy of such amendments (and of any statement) and, where required, a translation of such amendments for the proceduer before that Authority (see Rules 55.3(a) and 62.2, first sentence). For further information, see the Notes to the demand form (PCT/IPEA/401).

If a demand for international preliminary examination is made, the written opinion of the International Searching Authority will, except in certain cases where the International Preliminary Examining Authority did not act as International Searching Authority and where it has notified the International Bureau under Rule 66.1*bis*(b), be considered to be a written opinion of the International Preliminary Examining Authority. If a demand is made, the applicant may submit to the International Preliminary Examining Authority a reply to the written opinion together, where appropriate, with amendments before the expiration of 3 months from the date of mailing of Form PCT/ISA/220 or before the expiration of 22 months from the priority date, whichever expires later (Rule 43*bis*.1(c)).

Consequence with regard to translation of the international application for entry into the national phase

The applicant's attention is drawn to the fact that, upon entry into the national phase, a translation of the claims as amended under Article 19 may have to be furnished to the designated/elected Offices, instead of, or in addition to, the translation of the claims as filed.

For further details on the requirements of each designated/elected Office, see the *PCT Applicant's Guide*, National Chapters.

* Attention

Copies of the documents cited in the international search report can be searched in the following Korean Intellectual Property Office English website for three months from the date of mailing of the international search report.

http://www.kipo.go.kr/en/ => Patent Search => PCT-Service

ID : PCT international application number
PW : **XS2OGDWX**

Inquiries related to PCT International Search Report or Written Opinion prepared by KIPO as an International Searching Authority can be answered not only by KIPO but also through IPKC (Intellectual Property Korea Center), located in Vienna, VA, which functions as a PCT Help Desk for PCT applicants.

Homepage: http://www.ipkcenter.com
Email: ipkc@ipkcenter.com
Phone: +1 703 388 1066
Fax: +1 703 388 1084

PATENT COOPERATION TREATY

PCT

INTERNATIONAL SEARCH REPORT

(PCT Article 18 and Rules 43 and 44)

Applicant's or agent's file reference MXP-025PCT	**FOR FURTHER ACTION**	see Form PCT/ISA/220 as well as, where applicable, item 5 below.
International application No. **PCT/US2009/054739**	International filing date *(day/month/year)* **24 AUGUST 2009 (24.08.2009)**	(Earliest) Priority Date *(day/month/year)* 25 AUGUST 2008 (25.08.2008)
Applicant **MAXPOWER SEMICONDUCTOR INC. et al**		

This International search report has been prepared by this International Searching Authority and is transmitted to the applicant according to Article 18. A copy is being transmitted to the International Bureau.

This international search report consists of a total of 4 sheets.

☐ It is also accompanied by a copy of each prior art document cited in this report.

1. **Basis of the report**
   a. With regard to the **language**, the international search was carried out on the basis of :
      ☒ the international application in the language in which it was filed
      ☐ a translation of the international application into _____ , which is the language of a translation furnished for the purposes of international search (Rules 12.3(a) and 23.1(b))
   b. ☐ This international search report has been established taking into account the **rectification of an obvious mistake** authorized by or notified to this Authority under Rule 91 (Rule 43.6*bis*(a)).
   c. ☐ With regard to any **nucleotide and/or amino acid sequence** disclosed in the international application, see Box No. I.
2. ☐ **Certain claims were found unsearchable** (See Box No. II)
3. ☐ **Unity of invention is lacking** (See Box No. III)
4. With regard to the **title**,
   ☒ the text is approved as submitted by the applicant.
   ☐ the text has been established by this Authority to read as follows:
5. With regard to the **abstract**,
   ☒ the text is approved as submitted by the applicant.
   ☐ the text has been established, according to Rule 38.2, by this Authority as it appears in Box No. IV. The applicant may, within one month from the date of mailing of this international search report, submit comments to this Authority.
6. With regard to the drawings,
   a. the figure of the **drawings** to be published with the abstract is Figure No. 1
      ☐ as suggested by the applicant.
      ☐ as selected by this Authority, because the applicant failed to suggest a figure.
      ☒ as selected by this Authority, because this figure better characterizes the invention.
   b. ☐ none of the figure is to be published with the abstract.

INTERNATIONAL SEARCH REPORT

International application No.
PCT/US2009/054739

A. CLASSIFICATION OF SUBJECT MATTER

H01L 21/336(2006.01)i, H01L 21/265(2006.01)i

According to International Patent Classification (IPC) or to both national classification and IPC

B. FIELDS SEARCHED

Minimum documentation searched (classification system followed by classification symbols)

H01L 21/336; H01L 21/3205; H01L 21/8238; H01L 21/8244; H01L 29/78; H01L 29/788

Documentation searched other than minimum documentation to the extent that such documents are included in the fields searched

Korean utility models and applications for utility models
Japanese utility models and applications for utility models
(Chinese Patents and application for patent)

Electronic data base consulted during the international search (name of data base and, where practicable, search terms used)

e-KOMPASS(KIPO internal) : "transistor", "permanent", "charge", "trench", "dielectric", "gate", "termination", "field plate"

C. DOCUMENTS CONSIDERED TO BE RELEVANT

Category*	Citation of document, with indication, where appropriate, of the relevant passages	Relevant to claim No.
X Y	US 2005-0176204 A1 (THOMAS LANGDO et al.) 11 August 2005 See the abstract, paragraphs [0042]-[0056], claim 1, and figures 4-6	74-76 77-80
Y	US 2004-0121572 A1 (MOHAMED N. DARWISH et al.) 24 June 2004 See the abstract, paragraphs [0048]-[0063], and figures 5-6	77-80
A	US 2005-0285182 A1 (FRANZ SCHULER) 29 December 2005 See the abstract, paragraphs [0047]-[0062], and figures 3-8	1-100
A	US 2008-0023763 A1 (RICHARD BLANCHARD) 31 January 2008 See the abstract, paragraphs [0038]-[0052], and figures 3a-3d	1-100
A	US 2002-0197786 A1 (CHIH-CHEN CHO et al.) 26 December 2002 See the abstract, paragraphs [0028]-[0032], and figures 3A-3C	1-100

☐ Further documents are listed in the continuation of Box C ☒ See patent family annex.

* Special categories of cited documents:
"A" document defining the general state of the art which is not considered to be of particular relevance
"E" earlier application or patent but published on or after the international filing date
"L" document which may throw doubts on priority claim(s) or which is cited to establish the publication date of citation or other special reason (as specified)
"O" document referring to an oral disclosure, use, exhibition or other means
"P" document published prior to the international filing date but later than the priority date claimed
"T" later document published after the international filing date or priority date and not in conflict with the application but cited to understand the principle or theory underlying the invention
"X" document of particular relevance; the claimed invention cannot be considered novel or cannot be considered to involve an inventive step when the document is taken alone
"Y" document of particular relevance; the claimed invention cannot be considered to involve an inventive step when the document is combined with one or more other such documents,such combination being obvious to a person skilled in the art
"&" document member of the same patent family

Date of the actual completion of the international search	Date of mailing of the international search report
21 APRIL 2010 (21.04.2010)	**22 APRIL 2010 (22.04.2010)**
Name and mailing address of the ISA/KR Korean Intellectual Property Office Government Complex-Daejeon, 139 Seonsa-ro, Seo-gu, Daejeon 302-701, Republic of Korea Facsimile No. 82-42-472-7140	Authorized officer PARK, Keun Yong Telephone No. 82-42-481-8508

Form PCT/ISA/210 (second sheet) (July 2009)

INTERNATIONAL SEARCH REPORT

Information on patent family members

International application No.

PCT/US2009/054739

Patent document cited in search report	Publication date	Patent family member(s)	Publication date
US 2005-0176204 A1	11.08.2005	US 2004-0045499 A1	11.03.2004
		US 2006-0258125 A1	16.11.2006
		US 6946371 B2	20.09.2005
		US 7122449 B2	17.10.2006
		US 7439164 B2	21.10.2008
US 2004-0121572 A1	24.06.2004	AU 2002-310514 A8	21.01.2003
		AU 2002-355547 A8	24.02.2003
		AU 2003-296987 A1	30.06.2004
		AU 2003-300924 A1	29.07.2004
		CN 100424887 C	08.10.2008
		CN 1541417 A	27.10.2004
		CN 1541417 C0	07.03.2007
		CN 1726596 A	25.01.2006
		CN 1726596 C0	08.10.2008
		CN 1729578 A	01.02.2006
		CN 1729578 C0	01.02.2006
		EP 1376675 A2	02.01.2004
		EP 1376675 A3	19.01.2005
		EP 1425802 A2	09.06.2004
		EP 1435115 A2	07.07.2004
		JP 04-028482 B2	26.12.2007
		JP 04-299665 B2	24.04.2009
		JP 04-388017 B2	09.10.2009
		JP 2004-031959 A	29.01.2004
		JP 2004-535067 A	18.11.2004
		JP 2004-538649 A	24.12.2004
		JP 2006-510198 A	23.03.2006
		JP 2006-511974 A	06.04.2006
		JP 2009-152630 A	09.07.2009
		KR 10-0771815 B1	30.10.2007
		TW 544913 A	01.08.2003
		US 2003-0006454 A1	09.01.2003
		US 2003-0008460 A1	09.01.2003
		US 2003-0030104 A1	13.02.2003
		US 2003-0032247 A1	13.02.2003
		US 2003-0032248 A1	13.02.2003
		US 2003-0102564 A1	05.06.2003
		US 2003-0235958 A1	25.12.2003
		US 2004-0038467 A1	26.02.2004
		US 2004-0166636 A1	26.08.2004
		US 2004-0227182 A1	18.11.2004
		US 2004-038481 A1	26.02.2004
		US 2005-0236665 A1	27.10.2005
		US 2006-0038223 A1	23.02.2006
		US 2006-0121676 A1	08.06.2006
		US 6569738 B2	27.05.2003
		US 6600193 B2	29.07.2003
		US 6709930 B2	23.03.2004
		US 6764906 B2	20.07.2004

INTERNATIONAL SEARCH REPORT

Information on patent family members

International application No.

PCT/US2009/054739

Patent document cited in search report	Publication date	Patent family member(s)	Publication date
		US 6849898 B2	01.02.2005
		US 6875657 B2	05.04.2005
		US 6903412 B2	07.06.2005
		US 7009247 B2	07.03.2006
		US 7033876 B2	25.04.2006
		US 7291884 B2	06.11.2007
		US 7326995 B2	05.02.2008
		US 7416947 B2	26.08.2008
		US 7435650 B2	14.10.2008
		WO 03-005452 A2	16.01.2003
		WO 03-005452 A3	16.01.2003
		WO 03-015180 A2	20.02.2003
		WO 03-015180 A3	20.02.2003
		WO 2004-054000 A1	24.06.2004
		WO 2004-061975 A1	22.07.2004
US 2005-0285182 A1	29.12.2005	CN 1774808 A	17.05.2006
		CN 1774808 C0	16.04.2008
		DE 10304654 A1	19.08.2004
		EP 1590832 A2	02.11.2005
		EP 1590832 B1	18.11.2009
		US 7176519 B2	13.02.2007
		WO 2004-070841 A2	19.08.2004
		WO 2004-070841 A3	19.08.2004
		WO 2004-070841 A3	04.11.2004
US 2008-0023763 A1	31.01.2008	US 2008-023763 A1	31.01.2008
US 2002-0197786 A1	26.12.2002	US 2004-0219756 A1	04.11.2004
		US 2006-0091479 A1	04.05.2006
		US 2008-0128820 A1	05.06.2008
		US 6448129 B1	10.09.2002
		US 6756264 B2	29.06.2004
		US 7037775 B2	02.05.2006
		US 7342273 B2	11.03.2008

PATENT COOPERATION TREATY

From the
INTERNATIONAL SEARCHING AUTHORITY

To:
GROOVER ROBERT O.

GROOVER & ASSOCIATES P.O. BOX 802889 DALLAS
TX 75380 USA

PCT

WRITTEN OPINION OF THE INTERNATIONAL SEARCHING AUTHORITY

(PCT Rule 43bis.1)

Date of mailing *(day/month/year)*	**22 APRIL 2010 (22.04.2010)**
Applicant's or agent's file reference MXP-025PCT	**FOR FURTHER ACTION** See paragraph 2 below

International application No.	International filing date *(day/month/year)*	Priority date *(day/month/year)*
PCT/US2009/054739	**24 AUGUST 2009 (24.08.2009)**	25 AUGUST 2008 (25.08.2008)

International Patent Classification (IPC) or both national classification and IPC

H01L 21/336(2006.01)i, H01L 21/265(2006.01)i

Applicant

MAXPOWER SEMICONDUCTOR INC. et al

1. This opinion contains indications relating to the following items:

- [x] Box No. I Basis of the opinion
- [ ] Box No. II Priority
- [ ] Box No. III Non-establishment of opinion with regard to novelty, inventive step and industrial applicability
- [ ] Box No. IV Lack of unity of invention
- [x] Box No. V Reasoned statement under Rule 43bis.1(a)(i) with regard to novelty, inventive step or industrial applicability; citations and explanations supporting such statement
- [ ] Box No. VI Certain documents cited
- [ ] Box No. VII Certain defects in the international application
- [x] Box No. VIII Certain observations on the international application

7/22/10

PATENT
MAY 0 6 2010
DOCKETED

2. **FURTHER ACTION**
If a demand for international preliminary examination is made, this opinion will be considered to be a written opinion of the International Preliminary Examining Authority ("IPEA") except that this does not apply where the applicant chooses an Authority other than this one to be the IPEA and the chosen IPEA has notified the International Bureau under Rule 66.1bis(b) that written opinions of this International Searching Authority will not be so considered.

If this opinion is, as provided above, considered to be a written opinion of the IPEA, the applicant is invited to submit to the IPEA a written reply together, where appropriate, with amendments, before the expiration of 3 months from the date of mailing of Form PCT/ISA/220 or before the expiration of 22 months from the priority date, whichever expires later.
For further options, see Form PCT/ISA/220.

3. For further details, see notes to Form PCT/ISA/220.

Name and mailing address of the ISA/KR	Date of completion of this opinion	Authorized officer
Korean Intellectual Property Office Government Complex-Daejeon, 139 Seonsa-ro, Seo-gu, Daejeon 302-701, Republic of Korea Facsimile No. 82-42-472-7140	21 APRIL 2010 (21.04.2010)	PARK, Keun Yong Telephone No.82-42-481-8508

WRITTEN OPINION OF THE INTERNATIONAL SEARCHING AUTHORITY

International application No.
PCT/US2009/054739

Box No. I Basis of this opinion

1. With regard to the **language**, this opinion has been established on the basis of :

   ☒ the international application in the language in which it was filed

   ☐ a translation of the international application into _____ , which is the language of a translation furnished for the purposes of international search (Rules 12.3(a) and 23.1(b))

2. ☐ This opinion has been established taking into account the **rectification of an obvious mistake** authorized by or notified to this Authority under Rule 91 (Rule 43*bis*.1(a))

3. With regard to any **nucleotide and/or amino acid sequence** disclosed in the international application, this opinion has been established on the basis of:

   a. a sequence listing filed or furnished
      ☐ on paper
      ☐ in electronic form

   b. time of filing or furnishing:
      ☐ contained in the international application as filed
      ☐ filed together with the international application in electronic form
      ☐ furnished subsequently to this Authority for the purposes of search

4. ☐ In addition, in the case that more than one version or copy of a sequence listing has been filed or furnished, the required statements that the information in the subsequent or additioanl copies is identical to that in the application as filed or does not go beyond the application as filed, as appropriate, were furnished

5. Additional comments:

WRITTEN OPINION OF THE INTERNATIONAL SEARCHING AUTHORITY

International application No.
PCT/US2009/054739

Box No. V Reasoned statement under Rule 43bis.1(a)(i) with regard to novelty, inventive step or industrial applicability; citations and explanations supporting such statement

1. Statement

Novelty (N)	Claims	1-73,77-100	YES
	Claims	74-76	NO
Inventive step (IS)	Claims	1-73,81-100	YES
	Claims	74-80	NO
Industrial applicability (IA)	Claims	1-100	YES
	Claims	NONE	NO

2. Citations and explanations :

Reference is made to the following documents:

D1: US 2005-0176204 A1 (THOMAS LANGDO et al.) 11 August 2005
D2: US 2004-0121572 A1 (MOHAMED N. DARWISH et al.) 24 June 2004
D3: US 2005-0285182 A1 (FRANZ SCHULER) 29 December 2005
D4: US 2008-0023763 A1 (RICHARD BLANCHARD) 31 January 2008
D5: US 2002-0197786 A1 (CHIH-CHEN CHO et al.) 26 December 2002

The present invention relates to a high-voltage solid-state device having a permanent charge and a method for fabricating thereof.

2) Novelty

Regarding claims 74-76

D1 discloses a method of fabricating a semiconductor device, comprising: forming a doped layer on top of a heavily doped layer; depositing an epitaxial layer; and doping a dopant or impurity into the epitaxial layer. As all of the features of claim 74 are disclosed in D1, this claim is anticipated by D1. Therefore, claim 74 lacks novelty under PCT Article 33 (2)

The additional features of claims 75-76, which are dependent on claim 74, are shown in D1. Therefore, the invention of claims 75-76 does not meet the requirements of PCT Article 33 (2).

Regarding the other claims

The subject matter of claims 1-73, 77-100 is considered to be novel under PCT Article 33 (2).

3) Inventive step

Regarding claims 74-76

As mentioned above, since the subject matter of claims 74-76 lacks novelty under PCT Article 33 (2), claims 74-76 also lack an inventive step under PCT Article 33 (3).

Continued on Supplemental Box

Box No. VIII Certain observations on the international application

The following observations on the clarity of the claims, description, and drawings or on the question whether the claims are fully supported by the description, are made:

Claim 76 is worded in reference to "said impurity" of claim 74. However, "said impurity" has not been worded in claim 74. Therefore, claim 76 does not meet the requirements of PCT Article 6.

Supplemental Box

In case the space in any of the preceding boxes is not sufficient.
Continuation of :

Box V

Regarding claims 77-80

D1, which is considered to be the closest prior art to the subject matter of claim 79, discloses a method of fabricating a semiconductor device, comprising: forming a doped layer on top of a heavily doped layer; depositing an epitaxial layer; and doping a dopant or impurity into the epitaxial layer. Claim 79 differs from D1 in that the fabricating process does not include the step of etching a trench. However, D2 discloses a method of fabricating a trench MIS device having an etching process for making a trench. Accordingly, it would be obvious to a person skilled in the art to combine the composition of D1 with the composition related to the etching process for making the trench of D2. Therefore, claim 79 lacks an inventive step under PCT Article 33 (3).

The additional feature of claim 80, which is dependent on claim 79, is shown in D1. Therefore, claim 80 lacks an inventive step under PCT Article 33 (3).

The technical features of claims 77-78 of the present invention are substantially the same as those of claims 79-80. Therefore, claims 77-78 also lack an inventive step under PCT Article 33 (3).

Regarding claims 1-73,81-100

The subject matter of claims 1,41 differs from the documents D1-D5 in that a device or a method further comprises a portion or a process related to a permanent chare. And it is not obvious to a person skilled in the art by the documents, taken alone or in combination. Therefore, claims 1,41 meet the requirements of PCT Article 33 (3) with respect to inventive step.

The technical features of claims 2-40,42-73,81-100 of the present invention are substantially the same as those of claim 1 or claim 41. Therefore, claims 2-40,42-73,81-100 meet the requirements of PCT Article 33 (3).

4) Industrial Applicability

The inventions as defined in claims 1-100 are industrially applicable under PCT Article 33 (4).

CLAIMS

What is claimed is:

1. A high-voltage solid-state device, comprising:
   an array of active device portions, containing at least some trenches which
      have added permanent charge therein, and
      are laterally surrounded, for the majority of their vertical extent, by semiconductor material which is doped with a first conductivity type; and
   a termination structure which surrounds said array, and which includes a final dielectric trench containing permanent charge:
   wherein said final dielectric trench is surrounded by said material of said first conductivity type, and wherein doping of said material tapers off laterally to a junction, and said material outside of said junction is predominantly of a second conductivity type.

2. The device of Claim 1, wherein said permanent charge is provided by immobile cesium ions.

3. The device of Claim 1, wherein said termination structure further comprises a field plate.

4. The device of Claim 1, wherein said termination structure extends out toward the edge of the semiconductor material in which said device is built.

5. The device of Claim 1, wherein said termination structure includes at least one diffused guard ring.

6. The device of Claim 1, wherein said first conductivity type is n-type, and said termination structure includes at least one p-type ring diffusion.

7. The device of Claim 1, wherein said junction is predominantly vertical.

8. The device of Claim 1, wherein said first conductivity type is p-type.

9. The device of Claim 1, wherein said trenches within said array include conductive gate electrodes.

10. The device of Claim 1, wherein some of said trenches within said array include conductive gate electrodes, and others of said trenches within said array do not.

11. A high-voltage solid-state device, comprising:

an array of active device portions, containing at least some trenches which

include gate electrodes, and

have added permanent charge therein, and

are laterally surrounded, for the majority of their vertical extent, by semiconductor material which is doped with a first conductivity type and is capacitively coupled, at least in part, to ones of said gate electrodes; and

a termination structure which surrounds said array, and which includes a final dielectric trench which contains permanent charge and which has approximately the same depth as said trenches in said array:

wherein said final dielectric trench is surrounded by said material of said first conductivity type, and wherein doping of said material tapers off laterally to a predominantly vertical junction, and said material outside of said junction is predominantly of a second conductivity type.

12. The device of Claim 11, wherein said added permanent charge is provided by immobile cesium ions.

13. The device of Claim 11, wherein said termination structure further comprises at least one conductive field plate.

14. The device of Claim 11, wherein said termination structure extends out toward the edge of the semiconductor material in which said device is built.

15. The device of Claim 11, wherein said termination structure includes at least one diffused guard ring.

16. The device of Claim 11, wherein said first conductivity type is n-type, and said termination structure includes at least one p-type ring diffusion.

17. The device of Claim 11, wherein said first conductivity type is p-type.

18. The device of Claim 11, wherein some of said trenches within said array include conductive gate electrodes, and others of said trenches within said array do not.

19. A high-voltage solid-state device, comprising:

an array of active device portions, containing

first trenches which have added permanent charge, and contain conductive gate electrodes, and are laterally surrounded, for at least some of their vertical extent, by semiconductor material which is doped with a first conductivity type; and also

source diffusions of a second conductivity type, at least partly overlying said semiconductor material which laterally surrounds ones of said first trenches; and

second trenches which are different from said first trenches; and

a termination structure which laterally surrounds said array, and which includes a final dielectric trench which is also surrounded by said material of said first conductivity type, and wherein doping of said material tapers off laterally to a substantially vertical junction, and wherein said termination structure also contains peak-field-reducing structures outside said junction.

20. The device of Claim 19, wherein said final trench is structurally similar to said first trenches, but not said second trenches.

21. The device of Claim 19, wherein said final trench is structurally similar to said second trenches, but not to said first trenches.

22. The device of Claim 19, wherein said permanent charge is provided by immobile cesium ions.

23. The device of Claim 19, wherein said termination structure further comprises at least one field plate.

24. The device of Claim 19, wherein said termination structure extends out toward the edge of the semiconductor material in which said device is built.

25. The device of Claim 19, wherein said termination structure includes at least one diffused guard ring.

26. The device of Claim 19, wherein said first conductivity type is n-type, and said termination structure includes at least one p-type ring diffusion.

27. The device of Claim 19, wherein said junction is vertical for the depth of said first trenches.

28. The device of Claim 19, wherein said junction is predominantly vertical.

29. The device of Claim 19, wherein said first conductivity type is p-type.

30. An edge termination structure comprising:

a final dielectric trench containing permanent charge:

a junction region adjacent said final dielectric trench, said junction region having a first conductivity type; and

a termination region having a second conductivity type forming a termination junction with the junction region;

wherein said termination region includes at least one guard ring and at least one field plate.

31. The edge termination structure of Claim 30, wherein said permanent charge is embedded cesium ions.

32. The edge termination structure of Claim 30, further comprising a field plate which has a stepped profile and overlies a patterned dielectric layer.

33. The edge termination structure of Claim 30, further comprising both n-type and p-type guard ring diffusions within said termination region.

34. An edge termination structure comprising:

a final dielectric trench containing permanent charge:

a junction region adjacent said final dielectric trench, said junction region having a first conductivity type;

a termination region having a second conductivity type and forming a termination junction with the junction region; and

a combination of field plates with at least one and ring diffusion within said termination region.

35. The edge termination structure of Claim 34, wherein said permanent charge is embedded cesium.

36. The edge termination structure of Claim 34, further comprising a field plate.

37. An edge termination structure comprising:

a final dielectric trench containing permanent charge:

a junction region adjacent said final dielectric trench, said junction region having a first conductivity type;

a termination region having a second conductivity type and forming a termination junction with the junction region; wherein said junction termination region extends into said termination region with decreasing doping density.

38. The edge termination structure of Claim 37, wherein said permanent charge is embedded cesium ions.

39. The edge termination structure of Claim 37, further comprising a field plate.

40. The edge termination structure of Claim 37, further comprising a guard ring structure within said termination region.

41. A method of operating a power semiconductor device, comprising the actions of:

controlling carrier flow through an array of active device portions, said array containing at least some trenches which have added permanent charge, and are laterally surrounded, for the majority of their vertical extent, by semiconductor material which is doped with a first conductivity type; and

dropping voltage difference between front-side and backside contacts through a termination structure which surrounds said array, and which includes a final dielectric trench containing permanent charge: wherein said final dielectric trench is surrounded by said material of said first conductivity type, and wherein doping of said material tapers off laterally to a junction, and said material outside of said junction is predominantly of a second conductivity type.

42. The method of Claim 41, wherein said permanent charge is provided by immobile cesium ions.

43. The method of Claim 41, wherein said termination structure further comprises a field plate.

44. The method of Claim 41, wherein said termination structure extends out toward the edge of the semiconductor material in which said device is built.

45. The method of Claim 41, wherein said termination structure includes at least one diffused guard ring.

46. The method of Claim 41, wherein said first conductivity type is n-type, and said termination structure includes at least one p-type ring diffusion.

47. The method of Claim 41, wherein said junction is predominantly vertical.

48. The method of Claim 41, wherein said first conductivity type is p-type.

49. The method of Claim 41, wherein said trenches within said array include conductive gate electrodes.

50. The method of Claim 41, wherein some of said trenches within said array include conductive gate electrodes, and others of said trenches within said array do not.

51. A method of operating a power semiconductor device, comprising the actions of:

controlling vertical carrier flow through an array of active device portions, said array containing at least some trenches which include gate electrodes, and have added permanent charge, and are laterally surrounded, for the majority of their vertical extent, by semiconductor material which is doped with a first conductivity type and is capacitively coupled, at least in part, to ones of said gate electrodes; and

dropping voltage difference between front-side and backside contacts through a termination structure which surrounds said array, and which includes a final dielectric trench which contains permanent charge and which has approximately the same depth as said trenches in said array:

wherein said final dielectric trench is surrounded by said material of said first conductivity type, and wherein doping of said material tapers off laterally to a predominantly vertical junction, and said material outside of said junction is predominantly of a second conductivity type.

52. The method of Claim 51, wherein said added permanent charge is provided by immobile cesium ions.

53. The method of Claim 51, wherein said termination structure further comprises at least one conductive field plate.

54. The method of Claim 51, wherein said termination structure extends out toward the edge of the semiconductor material in which said device is built.

55. The method of Claim 51, wherein said termination structure includes at least one diffused guard ring.

56. The method of Claim 51, wherein said first conductivity type is n-type, and said termination structure includes at least one p-type ring diffusion.

57. The method of Claim 51, wherein said first conductivity type is p-type.

58. The method of Claim 51, wherein some of said trenches within said array include conductive gate electrodes, and others of said trenches within said array do not.

59. A method of operating a power semiconductor device, comprising the actions of:

controlling vertical carrier flow through an array of active device portions, said array containing

first trenches which have added permanent charge, and contain conductive gate electrodes, and are laterally surrounded, for at least some of their vertical extent, by semiconductor material which is doped with a first conductivity type; and also

injecting majority carriers into said first conductivity type material, when said gate electrodes turn conduction on, from source diffusions of a second conductivity type, which at least partly overlying said semiconductor material which laterally surrounds ones of said first trenches; and

second trenches which are different from said first trenches;

dropping voltage difference between frontside and backside contacts through a termination structure which laterally surrounds said array, and which includes a final dielectric trench which is also surrounded by said material of said first conductivity type, and wherein doping of said material tapers off laterally to a substantially vertical junction, and wherein said termination structure also contains peak-field-reducing structures outside said junction.

60. The method of Claim 59, wherein said final trench is structurally similar to said first trenches, but not said second trenches.

61. The method of Claim 59, wherein said final trench is structurally similar to said second trenches, but not to said first trenches.

62. The method of Claim 59, wherein said permanent charge is provided by immobile cesium ions.

63. The method of Claim 59, wherein said termination structure further comprises at least one field plate.

64. The method of Claim 59, wherein said termination structure extends out toward the edge of the semiconductor material in which said device is built.

65. The method of Claim 59, wherein said termination structure includes at least one diffused guard ring.

66. The method of Claim 59, wherein said first conductivity type is n-type, and said termination structure includes at least one p-type ring diffusion.

67. The method of Claim 59, wherein said junction is predominantly vertical.

68. The method of Claim 59, wherein said first conductivity type is p-type.

69. A method of fabricating an edge termination structure comprising
forming a doped layer on top of a more heavily doped layer;
etching a trench in said doped layer;
implanting an impurity along walls of said trench;
diffusing the impurity to form a diffusion region; and
implanting permanent charge in said trench.

70. The method of Claim 69, wherein said impurity is boron.

71. The method of Claim 69, wherein said diffusing is performed using vapor phase doping techniques.

72. A method of fabricating an edge termination structure comprising:
forming a doped layer on top of a more heavily doped layer;
etching a trench in said doped layer;
forming an insulating layer within said trench; and
diffusing an impurity having a first conductivity type to said doped layer through said insulating layer, and forming a first diffusion and second diffusion in said doped layer.

73. The method of Claim 72, wherein said impurity having a first conductivity type is boron.

74. A method of fabricating an edge termination structure comprising:
forming a doped layer on top of a more heavily doped layer;
depositing at least one epitaxial layer; and
introducing a dopant into said epitaxial layer.

75. The method of Claim 74, wherein said epitaxial layer is a phosphorus-doped layer.

76. The method of Claim 74, wherein said impurity is boron.

77. A method of fabricating an edge termination structure comprising:
forming a doped layer on top of a more heavily doped layer;
etching a trench in said doped layer;
forming a sequence of doped regions to form a collective region; and
introducing an impurity to said collective region.

78. The method of Claim 78, wherein said impurity is boron.

79. A method of fabricating an edge termination structure comprising:
forming a doped layer on top of a more heavily doped layer;
etching a trench in said doped layer;
growing an oxide layer within said trench;
forming an epitaxial region filling the trench using a selective epitaxial growth technique; and
introducing an impurity to said epitaxial region.

80. The method of Claim 79, wherein said impurity is boron.

81. The device of Claim 1, wherein said permanent charge is located in proximity to sidewalls of said trench.

82. The device of Claim 11, wherein said permanent charge is located in proximity to sidewalls of said trench.

83. The device of Claim 19, wherein said permanent charge is located in proximity to sidewalls of said trench.

84. The structure of Claim 30, wherein said permanent charge is located in proximity to sidewalls of said trench.

85. The structure of Claim 34, wherein said permanent charge is located in proximity to sidewalls of said trench.

86. The structure of Claim 37, wherein said permanent charge is located in proximity to sidewalls of said trench.

87. The method of Claim 41, wherein said permanent charge is located in proximity to sidewalls of said trench.

88. The method of Claim 51, wherein said permanent charge is located in proximity to sidewalls of said trench.

89. The method of Claim 59, wherein said permanent charge is located in proximity to sidewalls of said trench.

90. The method of Claim 69, wherein said permanent charge is located in proximity to sidewalls of said trench.

91. The device of Claim 1, wherein said permanent charge is located in a dielectric layer at sidewalls of said trench.

92. The device of Claim 11, wherein said permanent charge is located in a dielectric layer at sidewalls of said trench.

93. The device of Claim 19, wherein said permanent charge is located in a dielectric layer at sidewalls of said trench.

94. The structure of Claim 30, wherein said permanent charge is located in a dielectric layer at sidewalls of said trench.

95. The structure of Claim 34, wherein said permanent charge is located in a dielectric layer at sidewalls of said trench.

96. The structure of Claim 37, wherein said permanent charge is located in a dielectric layer at sidewalls of said trench.

97. The method of Claim 41, wherein said permanent charge is located in a dielectric layer at sidewalls of said trench.

98. The method of Claim 51, wherein said permanent charge is located in a dielectric layer at sidewalls of said trench.

99. The method of Claim 59, wherein said permanent charge is located in a dielectric layer at sidewalls of said trench.

100. The method of Claim 69, wherein said permanent charge is located in a dielectric layer at sidewalls of said trench.

PTO/SB/20PCT-KR (06-10)
Approved for use through 01/31/2012. OMB 0651-0058
U.S. Patent and Trademark Office; U. S. DEPARTMENT OF COMMERCE
Under the Paperwork Reduction Act of 1995, no persons are required to respond to a collection of information unless it displays a valid OMB control number.

REQUEST FOR PARTICIPATION IN THE PATENT COOPERATION TREATY - PATENT PROSECUTION HIGHWAY (PCT-PPH) PILOT PROGRAM BETWEEN THE KOREAN INTELLECTUAL PROPERTY OFFICE (KIPO) AND THE USPTO

Application No:	12/545,808	Filing date:	08-21-2009
First Named Inventor:	Mohamed N. Darwish		
Title of the Invention:	Devices Containing Permanent Charge		

THIS REQUEST FOR PARTICIPATION IN THE PCT-PPH PILOT PROGRAM ALONG WITH THE REQUIRED DOCUMENTS MUST BE SUBMITTED VIA EFS-WEB. INFORMATION REGARDING EFS-WEB IS AVAILABLE AT HTTP://WWW.USPTO.GOV/EBC/EFS_HELP.HTML

APPLICANT HEREBY REQUESTS PARTICIPATION IN THE PCT-PPH PROGRAM AND PETITIONS TO MAKE THE ABOVE-IDENTIFIED APPLICATION SPECIAL UNDER THE PCT-PPH PROGRAM.

The above-identified application is (1) a national stage entry of the corresponding PCT application, or (2) a national stage entry of another PCT application which claims priority to the corresponding PCT application, or (3) a national application that claims domestic/ foreign priority to the corresponding PCT application, or (4) a national application which forms the basis for the priority claim in the corresponding PCT application, or (5) a continuing application of a U.S. application that satisfies one of (1) to (4) above, or (6) a U.S. application that claims domestic benefit to a U.S. provisional application which forms the basis for the priority claim in the corresponding PCT application.

The corresponding PCT application number(s) is/are: PCT/US09/54739, claiming priority from US 61/091,442 filed 08-25-2008, and also from the present application.

The international date of the corresponding PCT application(s) is/are: 08/24/2009

I. List of Required Documents:

a. **A copy of the latest international work product (WO/ISA, WO/IPEA, or IPER) in the above–identified corresponding PCT application(s)**

- [x] Is attached.
- [ ] Is not attached because the document is already in the U.S. application.

b. **A copy of all claims which were indicated as having novelty, inventive step and industrial applicability in the above-identified corresponding PCT application(s).**

- [x] Is attached.
- [ ] Is not attached because the document is already in the U.S. application.

c. **English translations of the documents in a. and b. above are attached (if the documents are not in the English language). A statement that the English translation is accurate is attached for the document in b. above.**

This collection of information is required by 35 U.S.C. 119, 37 CFR 1.55, and 37 CFR 1.102(d). The information is required to obtain or retain a benefit by the public, which is to file (and by the USPTO to process) an application. Confidentiality is governed by 35 U.S.C. 122 and 37 CFR 1.11 and 1.14. This collection is estimated to take 2 hours to complete, including gathering, preparing, and submitting the completed application form to the USPTO. Time will vary depending upon the individual case. Any comments on the amount of time you require to complete this form and/or suggestions for reducing this burden should be sent to the Chief Information Officer, U.S. Patent and Trademark Office, U.S. Department of Commerce, P.O. Box 1450, Alexandria, VA 22313-1450. DO NOT SEND FEES OR COMPLETED FORMS TO THIS ADDRESS.

Approved for use through 01/31/2012. OMB 0651-0058
U.S.Patent and Trademark Office; U.S. DEPARTMENT OF COMMERCE
Under the Paperwork Reduction Act of 1995, no persons are required to respond to a collection of information unless it displays a valid OMB control number.

REQUEST FOR PARTICIPATION IN THE PCT-PPH PILOT PROGRAM BETWEEN THE KIPO AND THE USPTO

(continued)

Application No.:	12/545,808
First Named Inventor:	Mohamed N. Darwish

d. **(1) An information disclosure statement listing the documents cited in the international work products (ISR, WO/ISA, WO/IPEA, IPER) of the corresponding PCT application.**

☐ Is attached

☒ Has already been filed in the above-identified U.S. application on 6/3/2010

(2) Copies of all documents (except) for U.S. patents or U.S. patent application publications)

☒ Are attached.

Have already been filed in the above-identified U.S. application on 6/3/2010

II. Claims Correspondence Table:

Claims in US Application	Patentable Claims in the corresponding PCT Application	Explanation regarding the correspondence
1-11, 16, 18-21, 25-27	1-11, 16, 18-21, 25-27	Claims are identical

III. All the claims in the US application sufficiently correspond to the patentable claims in the corresponding PCT application.

Signature	/Robert O. Groover III/	Date	09-22-2010
Name (Print/Typed)	Robert Groover	Registration Number	30059

Privacy Act Statement

The **Privacy Act of 1974 (P.L. 93-579)** requires that you be given certain information in connection with your submission of the attached form related to a patent application or patent. Accordingly, pursuant to the requirements of the Act, please be advised that: (1) the general authority for the collection of this information is 35 U.S.C. 2(b)(2); (2) furnishing of the information solicited is voluntary; and (3) the principal purpose for which the information is used by the U.S. Patent and Trademark Office is to process and/or examine your submission related to a patent application or patent. If you do not furnish the requested information, the U.S. Patent and Trademark Office may not be able to process and/or examine your submission, which may result in termination of proceedings or abandonment of the application or expiration of the patent.

The information provided by you in this form will be subject to the following routine uses:

1. The information on this form will be treated confidentially to the extent allowed under the Freedom of Information Act (5 U.S.C. 552) and the Privacy Act (5 U.S.C 552a). Records from this system of records may be disclosed to the Department of Justice to determine whether disclosure of these records is required by the Freedom of Information Act.
2. A record from this system of records may be disclosed, as a routine use, in the course of presenting evidence to a court, magistrate, or administrative tribunal, including disclosures to opposing counsel in the course of settlement negotiations.
3. A record in this system of records may be disclosed, as a routine use, to a Member of Congress submitting a request involving an individual, to whom the record pertains, when the individual has requested assistance from the Member with respect to the subject matter of the record.
4. A record in this system of records may be disclosed, as a routine use, to a contractor of the Agency having need for the information in order to perform a contract. Recipients of information shall be required to comply with the requirements of the Privacy Act of 1974, as amended, pursuant to 5 U.S.C. 552a(m).
5. A record related to an International Application filed under the Patent Cooperation Treaty in this system of records may be disclosed, as a routine use, to the International Bureau of the World Intellectual Property Organization, pursuant to the Patent Cooperation Treaty.
6. A record in this system of records may be disclosed, as a routine use, to another federal agency for purposes of National Security review (35 U.S.C. 181) and for review pursuant to the Atomic Energy Act (42 U.S.C. 218(c)).
7. A record from this system of records may be disclosed, as a routine use, to the Administrator, General Services, or his/her designee, during an inspection of records conducted by GSA as part of that agency's responsibility to recommend improvements in records management practices and programs, under authority of 44 U.S.C. 2904 and 2906. Such disclosure shall be made in accordance with the GSA regulations governing inspection of records for this purpose, and any other relevant (*i.e.*, GSA or Commerce) directive. Such disclosure shall not be used to make determinations about individuals.
8. A record from this system of records may be disclosed, as a routine use, to the public after either publication of the application pursuant to 35 U.S.C. 122(b) or issuance of a patent pursuant to 35 U.S.C. 151. Further, a record may be disclosed, subject to the limitations of 37 CFR 1.14, as a routine use, to the public if the record was filed in an application which became abandoned or in which the proceedings were terminated and which application is referenced by either a published application, an application open to public inspection or an issued patent.
9. A record from this system of records may be disclosed, as a routine use, to a Federal, State, or local law enforcement agency, if the USPTO becomes aware of a violation or potential violation of law or regulation.

UNITED STATES PATENT AND TRADEMARK OFFICE

UNITED STATES DEPARTMENT OF COMMERCE
United States Patent and Trademark Office
Address: COMMISSIONER FOR PATENTS
P.O. Box 1450
Alexandria, Virginia 22313-1450
www.uspto.gov

APPLICATION NO.	FILING DATE	FIRST NAMED INVENTOR	ATTORNEY DOCKET NO.	CONFIRMATION NO.
12/545,808	08/21/2009	Mohammed N. Darwish	MXP-025	2174

29106 7590 11/16/2010
GROOVER & Associates
BOX 802889
DALLAS, TX 75380-2889

EXAMINER

ART UNIT	PAPER NUMBER
2822	

MAIL DATE	DELIVERY MODE
11/16/2010	PAPER

Please find below and/or attached an Office communication concerning this application or proceeding.

The time period for reply, if any, is set in the attached communication.

UNITED STATES PATENT AND TRADEMARK OFFICE

Commissioner for Patents
United States Patent and Trademark Office
P.O. Box 1450
Alexandria, VA 22313-1450
www.uspto.gov

GROOVER & Associates
BOX 802889
DALLAS TX 75380-2889

In re Application of	
DARWISH et al.	**: DECISION ON REQUEST TO**
Application No.: 12/545,808	**: PARTICIPATE IN THE PCT PATENT**
Filed: 21 August 2009	**: PROSECUTION HIGHWAY PILOT**
Attorney Docket No.: MXP-025	**: PROGRAM AND PETITION**
For: DEVICES CONTAINING	**: TO MAKE SPECIAL UNDER**
PERMANENT CHARGE	**: 37 CFR 1.102(d)**

This is a decision on the request to participate in the PCT Patent Prosecution Highway (PCT-PPH) pilot program and the petition under 37 CFR 1.102(a), filed 22 September 2010, to make the above-identified application special.

The request and petition are **DISMISSED**.

Discussion

A grantable request to participate in the PCT-PPH pilot program and petition to make special require:

(1) The U.S. application must have an eligible relationship to one or more PCT applications where the ISA or IPEA are the JPO, EPO, KIPO, or USPTO;

(2) At least one claim in the PCT application has novelty, inventive step, and industrial applicability and must be free of any observations in Box VIII in the latest work product in the international stage or applicant must identify and explain why the claim(s) is/are not subject to the observation in Box VIII;

(3) Applicant must submit a copy of the claim(s) from the PCT application(s) that have novelty, inventive step, and industrial applicability along with an English translation thereof and a statement that the English translation is accurate, if the claims are not in the English language;

(4) All the claims in the U.S. application must sufficiently correspond or be amended to sufficiently correspond to the claim(s) that have novelty, inventive step, and industrial applicability in the PCT application(s);

(5) Examination of the U.S. application has not begun;

(6) Applicant must submit a copy of the latest international work product from the PCT application indicating that the claim(s) have novelty, inventive step, and industrial applicability along with an English translation thereof and a statement that the English translation is accurate

if the latest international work product is not in the English language;

(7) Applicant must submit an IDS listing the documents cited by the PCT examiner in the international work product along with copies of documents except U.S. patents or U.S. patent application publications.

Conditions (1-6) above are considered to have been met. However, the request to participate in the PPH pilot program and petition fails meet condition (7).

Regarding the requirement of condition (7), application has failed to submit an IDS listing all the prior art documents cited by the PCT examiner in the international work product. The three category A references on the ISA/210 were not listed on any of the IDSs currently in the file.

Applicant is given **ONE** opportunity within a time period of **ONE MONTH or THIRTY DAYS**, whichever is longer, from the mailing date of this decision to correct the deficiencies. **NO EXTENSION OF TIME UNDER 37 CFR 1.136 IS PERMITTED.** If the deficiencies are not corrected with the time period given, the application will await action in its regular turn.

Response must be filed via the Electronic Filing System (EFS) with the Document Code PPH.PCT.652. Any preliminary amendments and IDS submitted with the PPH documents must be separately indexed as a preliminary amendment and IDS, respectively.

Telephone inquiries concerning this decision should be directed to Lee W. Young at 571-272-4549.

All other inquiries concerning the examination or status of the application is accessible in the PAIR system at http://www.uspto.gov/ebc/index.html.

Lee W. Young
TQAS Technology Center 2800 - Semiconductors,
Electrical & Optical Systems & Components

PTO/SB/20PCT-KR (06-10)
Approved for use through 01/31/2012. OMB 0651-0058
U.S. Patent and Trademark Office; U. S. DEPARTMENT OF COMMERCE
Under the Paperwork Reduction Act of 1995, no persons are required to respond to a collection of information unless it displays a valid OMB control number.

REQUEST FOR PARTICIPATION IN THE PATENT COOPERATION TREATY - PATENT PROSECUTION HIGHWAY (PCT-PPH) PILOT PROGRAM BETWEEN THE KOREAN INTELLECTUAL PROPERTY OFFICE (KIPO) AND THE USPTO

Application No:	12/545,808	Filing date:	8/21/09
First Named Inventor:	Darwish		
Title of the Invention:	Devices Containing Permanent Charge		

THIS REQUEST FOR PARTICIPATION IN THE PCT-PPH PILOT PROGRAM ALONG WITH THE REQUIRED DOCUMENTS MUST BE SUBMITTED VIA EFS-WEB. INFORMATION REGARDING EFS-WEB IS AVAILABLE AT HTTP://WWW.USPTO.GOV/EBC/EFS_HELP.HTML

APPLICANT HEREBY REQUESTS PARTICIPATION IN THE PCT-PPH PROGRAM AND PETITIONS TO MAKE THE ABOVE-IDENTIFIED APPLICATION SPECIAL UNDER THE PCT-PPH PROGRAM.

The above-identified application is (1) a national stage entry of the corresponding PCT application, or (2) a national stage entry of another PCT application which claims priority to the corresponding PCT application, or (3) a national application that claims domestic/ foreign priority to the corresponding PCT application, or (4) a national application which forms the basis for the priority claim in the corresponding PCT application, or (5) a continuing application of a U.S. application that satisfies one of (1) to (4) above, or (6) a U.S. application that claims domestic benefit to a U.S. provisional application which forms the basis for the priority claim in the corresponding PCT application.

The corresponding PCT application number(s) is/are: PCT/US09/054739 (=WO 2010/027727), claiming priority from US 61/091,442 filed 8/25/08, and also from the present application.

The international filing date of the corresponding PCT application(s) is/are: 8/24/09

I. List of Required Documents:

a. **A copy of the latest international work product (WO/ISA, WO/IPEA, or IPER) in the above–identified corresponding PCT application(s)**

☐ Is attached.

☑ Is not attached because the document is already in the U.S. application.

b. **A copy of all claims which were indicated as having novelty, inventive step and industrial applicability in the above-identified corresponding PCT application(s).**

☐ Is attached.

☑ Is not attached because the document is already in the U.S. application.

c. **English translations of the documents in a. and b. above are attached (if the documents are not in the English language). A statement that the English translation is accurate is attached for the document in b. above.**

This collection of information is required by 35 U.S.C. 119, 37 CFR 1.55, and 37 CFR 1.102(d). The information is required to obtain or retain a benefit by the public, which is to file (and by the USPTO to process) an application. Confidentiality is governed by 35 U.S.C. 122 and 37 CFR 1.11 and 1.14. This collection is estimated to take 2 hours to complete, including gathering, preparing, and submitting the completed application form to the USPTO. Time will vary depending upon the individual case. Any comments on the amount of time you require to complete this form and/or suggestions for reducing this burden should be sent to the Chief Information Officer, U.S. Patent and Trademark Office, U.S. Department of Commerce, P.O. Box 1450, Alexandria, VA 22313-1450. DO NOT SEND FEES OR COMPLETED FORMS TO THIS ADDRESS.

Approved for use through 01/31/2012. OMB 0651-0058
U.S.Patent and Trademark Office; U.S. DEPARTMENT OF COMMERCE
Under the Paperwork Reduction Act of 1995, no persons are required to respond to a collection of information unless it displays a valid OMB control number.

REQUEST FOR PARTICIPATION IN THE PCT-PPH PILOT PROGRAM BETWEEN THE KIPO AND THE USPTO

(continued)

Application No.:	12/545,808
First Named Inventor:	Darwish

d. **(1) An information disclosure statement listing the documents cited in the international work products (ISR, WO/ISA, WO/IPEA, IPER) of the corresponding PCT application.**

☐ Is attached

☑ Has already been filed in the above-identified U.S. application on 11/30/10 and earlier.

(2) Copies of all documents (except) for U.S. patents or U.S. patent application publications)

☐ Are attached.

☑ Have already been filed in the above-identified U.S. application on 11/30/10 and earlier.

II. Claims Correspondence Table:

Claims in US Application	Patentable Claims in the corresponding PCT Application	Explanation regarding the correspondence
1-11, 16. 18-21, 25-27	1-11, 16. 18-21, 25-27	Claims are identical.

III. All the claims in the US application sufficiently correspond to the patentable claims in the corresponding PCT application.

Signature /Robert O. Groover III/	Date 12/15/2010
Name (Print/Typed) Robert Groover	Registration Number 30059

Privacy Act Statement

The **Privacy Act of 1974 (P.L. 93-579)** requires that you be given certain information in connection with your submission of the attached form related to a patent application or patent. Accordingly, pursuant to the requirements of the Act, please be advised that: (1) the general authority for the collection of this information is 35 U.S.C. 2(b)(2); (2) furnishing of the information solicited is voluntary; and (3) the principal purpose for which the information is used by the U.S. Patent and Trademark Office is to process and/or examine your submission related to a patent application or patent. If you do not furnish the requested information, the U.S. Patent and Trademark Office may not be able to process and/or examine your submission, which may result in termination of proceedings or abandonment of the application or expiration of the patent.

The information provided by you in this form will be subject to the following routine uses:

1. The information on this form will be treated confidentially to the extent allowed under the Freedom of Information Act (5 U.S.C. 552) and the Privacy Act (5 U.S.C 552a). Records from this system of records may be disclosed to the Department of Justice to determine whether disclosure of these records is required by the Freedom of Information Act.
2. A record from this system of records may be disclosed, as a routine use, in the course of presenting evidence to a court, magistrate, or administrative tribunal, including disclosures to opposing counsel in the course of settlement negotiations.
3. A record in this system of records may be disclosed, as a routine use, to a Member of Congress submitting a request involving an individual, to whom the record pertains, when the individual has requested assistance from the Member with respect to the subject matter of the record.
4. A record in this system of records may be disclosed, as a routine use, to a contractor of the Agency having need for the information in order to perform a contract. Recipients of information shall be required to comply with the requirements of the Privacy Act of 1974, as amended, pursuant to 5 U.S.C. 552a(m).
5. A record related to an International Application filed under the Patent Cooperation Treaty in this system of records may be disclosed, as a routine use, to the International Bureau of the World Intellectual Property Organization, pursuant to the Patent Cooperation Treaty.
6. A record in this system of records may be disclosed, as a routine use, to another federal agency for purposes of National Security review (35 U.S.C. 181) and for review pursuant to the Atomic Energy Act (42 U.S.C. 218(c)).
7. A record from this system of records may be disclosed, as a routine use, to the Administrator, General Services, or his/her designee, during an inspection of records conducted by GSA as part of that agency's responsibility to recommend improvements in records management practices and programs, under authority of 44 U.S.C. 2904 and 2906. Such disclosure shall be made in accordance with the GSA regulations governing inspection of records for this purpose, and any other relevant (*i.e.*, GSA or Commerce) directive. Such disclosure shall not be used to make determinations about individuals.
8. A record from this system of records may be disclosed, as a routine use, to the public after either publication of the application pursuant to 35 U.S.C. 122(b) or issuance of a patent pursuant to 35 U.S.C. 151. Further, a record may be disclosed, subject to the limitations of 37 CFR 1.14, as a routine use, to the public if the record was filed in an application which became abandoned or in which the proceedings were terminated and which application is referenced by either a published application, an application open to public inspection or an issued patent.
9. A record from this system of records may be disclosed, as a routine use, to a Federal, State, or local law enforcement agency, if the USPTO becomes aware of a violation or potential violation of law or regulation.

UNITED STATES PATENT AND TRADEMARK OFFICE

UNITED STATES DEPARTMENT OF COMMERCE
United States Patent and Trademark Office
Address: COMMISSIONER FOR PATENTS
P.O. Box 1450
Alexandria, Virginia 22313-1450
www.uspto.gov

APPLICATION NO.	FILING DATE	FIRST NAMED INVENTOR	ATTORNEY DOCKET NO.	CONFIRMATION NO.
12/545,808	08/21/2009	Mohammed N. Darwish	MXP-025	2174

29106 7590 01/27/2011
GROOVER & Associates
BOX 802889
DALLAS, TX 75380-2889

EXAMINER

ART UNIT	PAPER NUMBER
2822	

MAIL DATE	DELIVERY MODE
01/27/2011	PAPER

Please find below and/or attached an Office communication concerning this application or proceeding.

The time period for reply, if any, is set in the attached communication.

UNITED STATES PATENT AND TRADEMARK OFFICE

Commissioner for Patents
United States Patent and Trademark Office
P.O. Box 1450
Alexandria, VA 22313-1450
www.uspto.gov

GROOVER & Associates
BOX 802889
DALLAS TX 75380-2889

In re Application of	**: DECISION ON REQUEST TO**
DARWISH et al.	**: PARTICIPATE IN THE PATENT**
Application No.: 12/545,808	**: PROSECUTION HIGHWAY**
Filed: 21 August 2009	**: PROGRAM AND PETITION**
Attorney Docket No.: MXP-025	**: TO MAKE SPECIAL UNDER**
For: DEVICES CONTAINING	**: 37 CFR 1.102(a)**
PERMANENT CHARGE	

This is a decision on the request to participate in the Patent Prosecution Highway (PPH) program and the petition under 37 CFR 1.102(a), filed 15 November 2010 and renewed on 15 December 2010, to make the above-identified application special.

The request and petition are **GRANTED**.

Discussion

A grantable request to participate in the PCT-PPH pilot program and petition to make special require:

(1) The U.S. application must disclose an eligible relationship to one or more PCT applications where the ISA or IPEA are the JPO, EPO, KIPO, or USPTO;

(2) At least one claim in the PCT application has novelty, inventive step, and industrial applicability and must be free of any observations in Box VIII in the latest work product in the international stage or applicant must identify and explain why the claim(s) is/are not subject to the observation in Box VIII;

(3) Applicant must submit a copy of the claim(s) from the PCT application(s) that have novelty, inventive step, and industrial applicability along with an English translation thereof and a statement that the English translation is accurate, if the claims are not in the English language;

(4) All the claims in the U.S. application must sufficiently correspond or be amended to sufficiently correspond to the claim(s) that have novelty, inventive step, and industrial applicability in the PCT application(s);

(5) Examination of the U.S. application has not begun;

(6) Applicant must submit a copy of the latest international work product from the PCT application indicating that the claim(s) have novelty, inventive step, and industrial applicability

along with an English translation thereof and a statement that the English translation is accurate if the latest international work product is not in the English language;

(7) Applicant must submit an IDS listing the documents cited by the PCT examiner in the international work product along with copies of documents except U.S. patents or U.S. patent application publications.

The request to participate in the PCT-PPH pilot program and petition comply with the above requirements. Accordingly, the above-identified application has been accorded "special" status.

Telephone inquiries concerning this decision should be directed to Lee W. Young at 571-272-4549.

All other inquiries concerning the examination or status of the application is accessible in the PAIR system at http://www.uspto.gov/ebc.index.html.

This application will be forwarded to the examiner for action on the merits commensurate with this decision once this application's formality reviews have been completed.

Lee W. Young
TQAS Technology Center 2800 - Semiconductors,
Electrical & Optical Systems & Components

UNITED STATES PATENT AND TRADEMARK OFFICE

Commissioner for Patents
United States Patent and Trademark Office
P.O. Box 1450
Alexandria, VA 22313-1450
www.uspto.gov

BUCHANAN INGERSOLL & ROONEY PC
POST OFFICE BOX 1404
ALEXANDRIA VA 22313-1404

MAILED
MAR 12 2012
OFFICE OF PETITIONS

In re Application of	:	**DECISION**
Kamada, et al.	:	**ON PETITION**
Application No. 12/545,893	:	**ACCEPTANCE OF**
Filed: August 24, 2009	:	**COLOR DRAWINGS**
Attorney Docket Number: 1034228-000038	:	**AND PHOTOGRAPHS**

This is in response to the petition under 37 CFR 1.84(a)(2) and 37 CFR 1.84(b)(2), filed November 4, 2009, for acceptance of color photographs.

The petition is **GRANTED**.

37 CFR 1.84(b)(2) states that color photographs will be accepted if the conditions for accepting color drawings and black and white photographs have been satisfied under 37 CFR 1.84(a)(2) and 37 CFR 1.84(b)(1).

A grantable petition under 37 C.F.R. 1.84(a)(2) to accept color drawings must be accompanied by the following:

(1) The fee set forth in 37 C.F.R. 1.17(h);

(2) Three (3) sets of color drawings, or one (1) set if filed via EFS, and

(3) The specification contains appropriate language referring to the color drawings as the first paragraph in that portion of the specification relating to the brief description of the drawings.

Lastly, 37 CFR 1.84(b)(1) states that the Office will accept photographs when the photographs are the "only practical medium for illustrating the claimed invention."

Here, the petition was accompanied by the required fee and drawings. The amendment to the specification contains the appropriate language. Therefore, the petition is granted.

The application is being forwarded to Group Art Unit 2872 for examination.

Telephone inquiries regarding this decision should be directed to Petitions Attorney Cliff Congo at (571)272-3207.

Jose Dees
Petitions Examiner
Office of Petitions

UNITED STATES PATENT AND TRADEMARK OFFICE

UNITED STATES DEPARTMENT OF COMMERCE
United States Patent and Trademark Office
Address: COMMISSIONER FOR PATENTS
P.O. Box 1450
Alexandria, Virginia 22313-1450
www.uspto.gov

APPLICATION NO.	FILING DATE	FIRST NAMED INVENTOR	ATTORNEY DOCKET NO.	CONFIRMATION NO.
12/545,933	08/24/2009	Josh Qiaohua Wu	1011-0005	2478

36844 7590 10/19/2011
CERMAK NAKAJIMA LLP
127 S. Peyton Street, Suite 210
ALEXANDRIA, VA 22314

EXAMINER
LI, BAO Q

ART UNIT	PAPER NUMBER
1648	

NOTIFICATION DATE	DELIVERY MODE
10/19/2011	ELECTRONIC

Please find below and/or attached an Office communication concerning this application or proceeding.

The time period for reply, if any, is set in the attached communication.

Notice of the Office communication was sent electronically on above-indicated "Notification Date" to the following e-mail address(es):

CGOODE@CermakNakajima.COM
IP@CermakNakajima.com
ACERMAK@CermakNakajima.com

United States Patent and Trademark Office

OCT 19 2011

Commissioner for Patents
United States Patent and Trademark Office
P.O. Box 1450
Alexandria, VA 22313-1450
www.uspto.gov

Shelly Guest Cermak
CERMAK NAKAJIMA LLP
127 S. Peyton Street, Suite 210
ALEXANDRIA VA 22314

In re Application of	:
Wu et al	:Decision on Petition
Serial No.: 12/545,933	:
Filed : 24 August 2009	:
Attorney Docket No.: 1011-0005	:

This letter is in response to the Petition under 37 C.F.R. 1.144 filed on 11 October 2011 requesting reconsideration of the restriction requirement mailed 29 October 2010.

BACKGROUND

This application was filed as a national application under 35 U.S.C. 111(a) and as such is entitled to consideration of the restriction requirement under Chapter 800.

On 29 October 2010, the examiner set forth a restriction requirement which divided claims 1-24 into two groups and various election of species were required.

On 29 November 2010, applicants elected Group I, and the species of interferon alpha, structural proteins, adenovirus, human and WEEV, with traverse.

On 21 January 2011, the examiner considered the traversal and made the restriction requirement final. Claims 2, 4, 6, 8, 10-16 were withdrawn from consideration as being directed to non-elected inventions. Claims 1, 3, 5, 7, 9, 11 and 17-24 were rejected under 35 U.S.C. 112, 1st paragraph as lacking full scope of enablement.

On 3 June 2011, the examiner mailed a final Office action in which claims 1, 3, 5, 7 and 17-24 were rejected on the merits. Claims 2, 4, 6, and 8 were withdrawn from consideration as being directed to non-elected inventions. This Office action was vacated by the examiner on 11 July, 2011 and a second non-final action was prepared in which Claims 2, 4, 6, and 8 were withdrawn from consideration as being directed to non-elected inventions and claims 1, 3, 5, and 17-24 were rejected on their merits.

On 11 October 2011, applicants filed a response along with this petition.

DISCUSSION

The file history of the instant application has been considered carefully. The examiner has placed the claims into two groups. Applicant elected Group I and wishes to have considered for concurrent examination Group II.

I. Claims 1, 3, 5, 7, 9 and 17-24, drawn to a method using two DNA vaccines encoding a viral protein and an interferon to treat and prevent a alphavirus infection, classified in class 514, subclass 93.1.

II. Claims 2, 4, 6, 8, 10-16, drawn to a method using a DNA vaccine encoding an alphavirus protein, classified in class 514, subclass 44.

Relevant claims are set forth below.

1. (Previously presented) A method for the post-exposure protection of a susceptible animal from alphavirus infection comprising inoculating said animal with a recombinant viral vector containing a DNA sequence capable of producing interferon-alpha in said animal in an amount effective for conferring a protective response in the animal.

2. (Withdrawn) A method for the post-exposure protection of a susceptible animal from alphavirus infection comprising inoculating said animal with a vaccine comprising a recombinant viral vector containing a DNA sequence capable of producing the E1 and E2 viral proteins of alphaviruses that stimulate an immune response in said animal in an amount effective for conferring a protective response in the animal.

3. (Previously presented) The method for the post-exposure protection of a susceptible animal from alphavirus infection of claim 1, further comprising inoculating said animal with a vaccine comprising a recombinant viral vector containing a DNA sequence capable of producing the E1 and E2 viral proteins of alphaviruses that stimulate an immune response in said animal in an amount effective for conferring a protective response in the animal.

4. (Withdrawn) The method for the post-exposure protection of a susceptible animal from alphavirus infection of claim 2, wherein said recombinant viral vector also contains a DNA sequence capable of producing interferon-alpha in said animal in an amount effective for conferring a protective response in the animal.

The limitations of these claims are outlined in the following chart:

Subcombination "A"	Combination "AB"	Subcombination "B"	Combination "BA"
Group I, Claim 1, examined	Group I, Claim 3, examined	Group II, claim 2, withdrawn	Group II, claim 4, withdrawn
A method for the post-exposure protection of a susceptible animal from alphavirus infection comprising	The method for the post-exposure protection of a susceptible animal from alphavirus infection **of Claim 1, further** comprising	A method for the post-exposure protection of a susceptible animal from alphavirus infection comprising	The method for the post-exposure protection of a susceptible animal from alphavirus infection **of Claim 2,**
inoculating said animal with a recombinant viral vector containing a DNA sequence capable of producing interferon-alpha in said animal in an amount effective for conferring a protective response in the animal.			wherein said recombinant viral vector **also contains** a DNA sequence capable of producing interferon-alpha in said animal in an amount effective for conferring a protective response in the animal.
	inoculating said animal with a vaccine comprising a recombinant viral vector containing a DNA sequence capable of producing the E1 and E2 viral proteins of alphaviruses that stimulate an immune response in said animal in an amount effective for conferring a protective response in the animal.	inoculating said animal with a vaccine comprising a recombinant viral vector containing a DNA sequence capable of producing the E1 and E2 viral proteins of alphaviruses that stimulate an immune response in said animal in an amount effective for conferring a protective response in the animal.	

The examiner had indicated that the inventions of Group I and II were unrelated. Applicant correctly points out that the inventions are related and that they overlap in scope. Here, the relationship between Claim 1 and Claim 3 is that of subcombinations useable together, with both groups reciting a dependent claim to the combination. MPEP 806.05(c) provides a two way test to establish distinction between combination/subcombination inventions of this sort.

The inventions are distinct if it can be shown that a combination as claimed:

(A) does not require the particulars of the subcombination as claimed for patentability (to show novelty and unobviousness), and
(B) the subcombination can be shown to have utility either by itself or in another materially different combination.

Here, because the claim set is drafted such that the two subcombinations are separately recited in different independent claims, the combination, as claimed, does not require the particulars of any one subcombination for patentability. However, the dependent claims to the combination of "AB" or "BA" are not patentably distinct from each other. Therefore, the restriction between combination claims 2 and 3 is counter to MPEP 803, which states that "the claims of an application may properly be required to be restricted to one of two or more claimed inventions *only if they are able to support separate patents*." (Emphasis added).

Finally, because the examiner has already examined one subcombination "A" and the combination "AB" on the merits, it would not be a serious burden to examiner claims to the second subcombination "B" and combination "BA" of Group II. As such, the restriction requirement between Group I and II is unwarranted.

DECISION

For these reasons, the petition filed under 37 CFR 1.144 on 11 October 2011 is **GRANTED** as follows.

The restriction requirement between Group I and II is withdrawn.

The Office action mailed out 11 July 2011 is withdrawn as incomplete for not addressing claims of rejoined Group II on the merits.

The application will be forwarded to the examiner for consideration of the papers filed 11 October 2011 and for preparation of an Office action in a manner consistent with this petition decision. Because this application is up for its 5th action, the guidance in MPEP 707.02 concerning supervisory review applies.

Should there be any questions regarding this decision, please contact Quality Assurance Specialist Julie Burke by mail addressed to Director, Technology Center 1600, PO BOX 1450, ALEXANDRIA, VA 22313-1450, or by telephone at (571) 272-0512 or by Official Fax at 703-272-8300.

George E. Elliott

George Elliott
Director, Technology Center 1600

UNITED STATES PATENT AND TRADEMARK OFFICE

UNITED STATES DEPARTMENT OF COMMERCE
United States Patent and Trademark Office
Address: COMMISSIONER FOR PATENTS
P.O. Box 1450
Alexandria, Virginia 22313-1450
www.uspto.gov

APPLICATION NO.	FILING DATE	FIRST NAMED INVENTOR	ATTORNEY DOCKET NO.	CONFIRMATION NO.
12/546,006	08/24/2009	Dennis L. Schultze	1423-143	2607

32905 7590 11/23/2011
JONDLE & ASSOCIATES, P.C.
858 HAPPY CANYON ROAD, SUITE 230
CASTLE ROCK, CO 80108

EXAMINER
WORLEY, CATHY KINGDON

ART UNIT	PAPER NUMBER
1638	

NOTIFICATION DATE	DELIVERY MODE
11/23/2011	ELECTRONIC

Please find below and/or attached an Office communication concerning this application or proceeding.

The time period for reply, if any, is set in the attached communication.

Notice of the Office communication was sent electronically on above-indicated "Notification Date" to the following e-mail address(es):

JondleOA@jondlelaw.com

UNITED STATES PATENT AND TRADEMARK OFFICE

Commissioner for Patents
United States Patent and Trademark Office
P.O. Box 1450
Alexandria, VA 22313-1450
www.uspto.gov

NOV 2 3 2011

JONDLE & ASSOCIATES P.C.
858 HAPPY CANYON ROAD SUITE 230
CASTLE ROCK CO 80108

In re Application of:	:
Dennis L. Schultze	:
Serial No.: 12/546,006	: PETITION DECISION
Filed: August 24, 2009	:
Attorney Docket No.: **1423-132**	

This is in response to the petition under 37 CFR § 1.59(b), filed November 16, 2011, to expunge information from the above identified application. This application has not been allowed.

Petitioner requests that the Reply to Request for Information under 37 CFR 1.105, and attachment thereto, submitted to the Patent Office on November 16, 2011, be expunged from the record. Petitioner states either: (A) that the information contains trade secret material, proprietary material and/or material that is subject to a protective order which has not been made public; or (B) that the information submitted was unintentionally submitted and the failure to obtain its return would cause irreparable harm to the party who submitted the information or to the party in interest on whose behalf the information was submitted, and the information has not otherwise been made public. The petition fee set forth in 37 CFR § 1.17(g) has been paid.

This is an examined application which is currently under non-final rejection. As such the information provided has been reviewed, in part, but proceedings in the application have not been terminated. As stated in M.P.E.P. 724, upon allowance or other action closing prosecution in an application, petition may be made for return of Proprietary information. The information cannot be expunged at this time.

The petition is **DISMISSED**. Petitioner may resubmit the petition subsequent to a Notice of Allowability or *ex parte Quayle* action being mailed in the application. No additional petition fee will be required at that time.

Should there be any questions about this decision please contact Marianne C. Seidel by letter addressed to Director, TC 1600, at the address listed above, or by telephone at 571-272-0584 or by facsimile sent to the general Office facsimile number, 571-273-8300.

/MC Seidel/
Marianne C. Seidel, Quality Assurance Specialist
Technology Center 1600

UNITED STATES PATENT AND TRADEMARK OFFICE

Commissioner for Patents
United States Patent and Trademark Office
P.O. Box 1450
Alexandria, VA 22313-1450
www.uspto.gov

Decision Date : December 2, 2011

In re Application of :

Dennis Schultze

Application No : 12546006

Filed : 24-Aug-2009

Attorney Docket No : 1423-143

DECISION ON REQUEST TO WITHDRAW AS ATTORNEY/AGENTOF RECORD

This is an electronic decision on the Request to Withdraw as attorney or agent of record under 37 CFR§ 1.36(b), filed December 2, 2011

The request is **APPROVED**

The request was signed by Robert J. Jondle (registration no. 33915) on behalf of all attorneys/agents associated with Customer Number 32905 . All attorneys/agents associated with Customer Number 32905 have been withdrawn.

Since there are no remaining attorneys of record, all future communications from the Office will be directed to the first named inventor or assignee that has properly made itself of record pursuant to 37 CFR 3.71, with Customer number 26263 .

As a reminder, requester is required to inform the first named inventor or assignee that has properly made itself of record pursuant to 37 CFR 3.71 of the electronically processed petition.

Telephone inquiries concerning this decision should be directed to the Patent Electronic Business Center (EBC) at 866-217-9197.

Office of Petitions

Doc Code: PET.AUTO **Document Description: Petition automatically granted by EFS-Web**	PTO/SB/83 U.S. Patent and Trademark Office Department of Commerce

Electronic Petition Request	**REQUEST FOR WITHDRAWAL AS ATTORNEY OR AGENT AND CHANGE OF CORRESPONDENCE ADDRESS**
Application Number	12546006
Filing Date	24-Aug-2009
First Named Inventor	Dennis Schultze
Art Unit	1638
Examiner Name	CATHY WORLEY
Attorney Docket Number	1423-143
Title	Soybean Cultivar 8322144

◉ Please withdraw me as attorney or agent for the above identified patent application and the practitioners of record associated with Customer Number: 32905

The reason(s) for this request are those described in 37 CFR:

10.40(b)(4)

Certifications

☒ I/We have given reasonable notice to the client, prior to the expiration of the response period, that the practitioner(s) intend to withdraw from employment

☒ I/We have delivered to the client or a duly authorized representative of the client all papers and property (including funds) to which the client is entitled

☒ I/We have notified the client of any responses that may be due and the time frame within which the client must respond

Change the correspondence address and direct all future correspondence to:
The address of the first named inventor or assignee that has properly made itself of record pursuant to 37 CFR 3.71, associated with Customer Number: 26263

I am authorized to sign on behalf of myself and all withdrawing practitioners.

Signature	/Robert J. Jondle/
Name	Robert J. Jondle
Registration Number	33915

Doc Code: PET.AUTO **Document Description: Petition automatically granted by EFS-Web**	PTO/SB/83 U.S. Patent and Trademark Office Department of Commerce

Electronic Petition Request	**REQUEST FOR WITHDRAWAL AS ATTORNEY OR AGENT AND CHANGE OF CORRESPONDENCE ADDRESS**
Application Number	12546016
Filing Date	24-Aug-2009
First Named Inventor	Dennis Schultze
Art Unit	1638
Examiner Name	RUSSELL KALLIS
Attorney Docket Number	1423-145
Title	Soybean Cultivar 8536465

◉ Please withdraw me as attorney or agent for the above identified patent application and the practitioners of record associated with Customer Number: 32905

The reason(s) for this request are those described in 37 CFR:

10.40(b)(4)

Certifications

☒ I/We have given reasonable notice to the client, prior to the expiration of the response period, that the practitioner(s) intend to withdraw from employment

☒ I/We have delivered to the client or a duly authorized representative of the client all papers and property (including funds) to which the client is entitled

☒ I/We have notified the client of any responses that may be due and the time frame within which the client must respond

Change the correspondence address and direct all future correspondence to:
The address of the first named inventor or assignee that has properly made itself of record pursuant to 37 CFR 3.71, associated with Customer Number: 26263

I am authorized to sign on behalf of myself and all withdrawing practitioners.

Signature	/Robert J. Jondle/
Name	Robert J. Jondle
Registration Number	33915

UNITED STATES PATENT AND TRADEMARK OFFICE

Commissioner for Patents
United States Patent and Trademark Office
P.O. Box 1450
Alexandria, VA 22313-1450
www.uspto.gov

Decision Date : February 20, 2012

In re Application of :

Dennis Schultze

Application No : 12546016

Filed : 24-Aug-2009

Attorney Docket No : 1423-145

DECISION ON REQUEST TO WITHDRAW AS ATTORNEY/AGENTOF RECORD

This is an electronic decision on the Request to Withdraw as attorney or agent of record under 37 CFR§ 1.36(b), filed February 20, 2012

The request is **APPROVED**

The request was signed by Robert J. Jondle (registration no. 33915) on behalf of all attorneys/agents associated with Customer Number 32905 . All attorneys/agents associated with Customer Number 32905 have been withdrawn.

Since there are no remaining attorneys of record, all future communications from the Office will be directed to the first named inventor or assignee that has properly made itself of record pursuant to 37 CFR 3.71, with Customer number 26263 .

As a reminder, requester is required to inform the first named inventor or assignee that has properly made itself of record pursuant to 37 CFR 3.71 of the electronically processed petition.

Telephone inquiries concerning this decision should be directed to the Patent Electronic Business Center (EBC) at 866-217-9197.

Office of Petitions

UNITED STATES PATENT AND TRADEMARK OFFICE

Commissioner for Patents
United States Patent and Trademark Office
P.O. Box 1450
Alexandria, VA 22313-1450
www.uspto.gov

Decision Date : February 20, 2012

In re Application of :

Dennis Schultze

Application No : 12546030

Filed : 24-Aug-2009

Attorney Docket No : 1423-147

DECISION ON REQUEST TO WITHDRAW AS ATTORNEY/AGENTOF RECORD

This is an electronic decision on the Request to Withdraw as attorney or agent of record under 37 CFR§ 1.36(b), filed February 20, 2012

The request is **APPROVED**

The request was signed by Robert J. Jondle (registration no. 33915) on behalf of all attorneys/agents associated with Customer Number 32905 . All attorneys/agents associated with Customer Number 32905 have been withdrawn.

Since there are no remaining attorneys of record, all future communications from the Office will be directed to the first named inventor or assignee that has properly made itself of record pursuant to 37 CFR 3.71, with Customer number 26263 .

As a reminder, requester is required to inform the first named inventor or assignee that has properly made itself of record pursuant to 37 CFR 3.71 of the electronically processed petition.

Telephone inquiries concerning this decision should be directed to the Patent Electronic Business Center (EBC) at 866-217-9197.

Office of Petitions

Doc Code: PET.AUTO **Document Description: Petition automatically granted by EFS-Web**	PTO/SB/83 U.S. Patent and Trademark Office Department of Commerce

Electronic Petition Request	**REQUEST FOR WITHDRAWAL AS ATTORNEY OR AGENT AND CHANGE OF CORRESPONDENCE ADDRESS**
Application Number	12546030
Filing Date	24-Aug-2009
First Named Inventor	Dennis Schultze
Art Unit	1638
Examiner Name	RUSSELL KALLIS
Attorney Docket Number	1423-147
Title	Soybean Cultivar 8647195

◉ Please withdraw me as attorney or agent for the above identified patent application and the practitioners of record associated with Customer Number: 32905

The reason(s) for this request are those described in 37 CFR:

10.40(b)(4)

Certifications

☒ I/We have given reasonable notice to the client, prior to the expiration of the response period, that the practitioner(s) intend to withdraw from employment

☒ I/We have delivered to the client or a duly authorized representative of the client all papers and property (including funds) to which the client is entitled

☒ I/We have notified the client of any responses that may be due and the time frame within which the client must respond

Change the correspondence address and direct all future correspondence to:
The address of the first named inventor or assignee that has properly made itself of record pursuant to 37 CFR 3.71, associated with Customer Number: 26263

I am authorized to sign on behalf of myself and all withdrawing practitioners.

Signature	/Robert J. Jondle/
Name	Robert J. Jondle
Registration Number	33915

UNITED STATES PATENT AND TRADEMARK OFFICE

UNITED STATES DEPARTMENT OF COMMERCE
United States Patent and Trademark Office
Address: COMMISSIONER FOR PATENTS
P.O. Box 1450
Alexandria, Virginia 22313-1450
www.uspto.gov

APPLICATION NO.	FILING DATE	FIRST NAMED INVENTOR	ATTORNEY DOCKET NO.	CONFIRMATION NO.
12/546,050	08/24/2009	Norman Van Meeteren	1423-149	2684

32905 7590 06/03/2011
JONDLE & ASSOCIATES, P.C.
858 HAPPY CANYON ROAD, SUITE 230
CASTLE ROCK, CO 80108

EXAMINER
MCELWAIN, ELIZABETH F

ART UNIT	PAPER NUMBER
1638	

NOTIFICATION DATE	DELIVERY MODE
06/03/2011	ELECTRONIC

Please find below and/or attached an Office communication concerning this application or proceeding.

The time period for reply, if any, is set in the attached communication.

Notice of the Office communication was sent electronically on above-indicated "Notification Date" to the following e-mail address(es):

JondleOA@jondlelaw.com

UNITED STATES PATENT AND TRADEMARK OFFICE

Commissioner for Patents
United States Patent and Trademark Office
P.O. Box 1450
Alexandria, VA 22313-1450
www.uspto.gov

JUN 0 3 2011

JONDLE & ASSOCIATES P.C.
858 HAPPY CANYON ROAD SUITE 230
CASTLE ROCK CO 80108

In re Application of:	:
Norman Van Meeteren	:
Serial No.: 12/546,050	: PETITION DECISION
Filed: August 24, 2009	:
Attorney Docket No.: **1423-149**	

This is in response to the petition under 37 CFR § 1.59(b), filed May 18, 2011, to expunge information from the above identified application. This application has not been allowed.

Petitioner requests that the Reply to Request for Information under 37 CFR 1.105, and attachment thereto, submitted to the Patent Office on May 18, 2011, be expunged from the record. Petitioner states either: (A) that the information contains trade secret material, proprietary material and/or material that is subject to a protective order which has not been made public; or (B) that the information submitted was unintentionally submitted and the failure to obtain its return would cause irreparable harm to the party who submitted the information or to the party in interest on whose behalf the information was submitted, and the information has not otherwise been made public. The petition fee set forth in 37 CFR § 1.17(g) has been paid.

This is an examined application which is currently under non-final rejection. As such the information provided has been reviewed, in part, but proceedings in the application have not been terminated. As stated in M.P.E.P. 724, upon allowance or other action closing prosecution in an application, petition may be made for return of Proprietary information. The information cannot be expunged at this time.

The petition is **DISMISSED**. Petitioner may resubmit the petition subsequent to a Notice of Allowability or *ex parte Quayle* action being mailed in the application. No additional petition fee will be required at that time.

Should there be any questions about this decision please contact Marianne C. Seidel by letter addressed to Director, TC 1600, at the address listed above, or by telephone at 571-272-0584 or by facsimile sent to the general Office facsimile number, 571-273-8300.

/MC Seidel/
Marianne C. Seidel, Quality Assurance Specialist
Technology Center 1600

UNITED STATES PATENT AND TRADEMARK OFFICE

UNITED STATES DEPARTMENT OF COMMERCE
United States Patent and Trademark Office
Address: COMMISSIONER FOR PATENTS
P.O. Box 1450
Alexandria, Virginia 22313-1450
www.uspto.gov

APPLICATION NO.	FILING DATE	FIRST NAMED INVENTOR	ATTORNEY DOCKET NO.	CONFIRMATION NO.
12/546,050	08/24/2009	Norman Van Meeteren	1423-149	2684

32905 7590 11/23/2011
JONDLE & ASSOCIATES, P.C.
858 HAPPY CANYON ROAD, SUITE 230
CASTLE ROCK, CO 80108

EXAMINER
MCELWAIN, ELIZABETH F

ART UNIT	PAPER NUMBER
1638	

NOTIFICATION DATE	DELIVERY MODE
11/23/2011	ELECTRONIC

Please find below and/or attached an Office communication concerning this application or proceeding.

The time period for reply, if any, is set in the attached communication.

Notice of the Office communication was sent electronically on above-indicated "Notification Date" to the following e-mail address(es):

JondleOA@jondlelaw.com

UNITED STATES PATENT AND TRADEMARK OFFICE

NOV 2 3 2011

Commissioner for Patents
United States Patent and Trademark Office
P.O. Box 1450
Alexandria, VA 22313-1450
www.uspto.gov

JONDLE & ASSOCIATES P.C.
858 HAPPY CANYON ROAD SUITE 230
CASTLE ROCK CO 80108

In re Application of:	:
Norman Van Meeteren	: PETITION DECISION
Serial No.: 12/546,050	:
Filed: August 24, 2009	:
Attorney Docket No.: **1423-149**	

This is in response to the renewed petition under 37 CFR § 1.59(b), filed November 14, 2011, to expunge information from the above identified application. This application has been allowed.

Petitioner requests that the material submitted to the Patent Office on May 18, 2011 be expunged from the record. Petitioner states either: (A) that the information contains trade secret material, proprietary material and/or material that is subject to a protective order which has not been made public; or (B) that the information submitted was unintentionally submitted and the failure to obtain its return would cause irreparable harm to the party who submitted the information or to the party in interest on whose behalf the information was submitted, and the information has not otherwise been made public. The petition fee set forth in 37 CFR § 1.17(g) has been paid.

The reasons set forth in this petition establishes to the satisfaction of the Director that expungement of the information is appropriate. The file entry for this document has been closed and as such the document is no longer publicly available, which is the IFW equivalent to removal of a paper document from a paper file wrapper.

Therefore, petitioner's petition is GRANTED.

Should there be any questions about this decision please contact Marianne C. Seidel by letter addressed to Director, TC 1600, at the address listed above, or by telephone at 571-272-0584 or by facsimile sent to the general Office facsimile number, 571-273-8300.

/MC Seidel/
Marianne C. Seidel, Quality Assurance Specialist
Technology Center 1600

UNITED STATES PATENT AND TRADEMARK OFFICE

Commissioner for Patents
United States Patent and Trademark Office
P.O. Box 1450
Alexandria, VA 22313-1450
www.uspto.gov

Decision Date : December 27, 2011

In re Application of :

Andrew Radin

Application No : 12546075

Filed : 24-Aug-2009

Attorney Docket No : 046185-0125

DECISION ON REQUEST TO WITHDRAW AS ATTORNEY/AGENTOF RECORD

This is an electronic decision on the Request to Withdraw as attorney or agent of record under 37 CFR § 1.36(b), filed December 27, 2011

The request is **APPROVED.**

The request was signed by Hunter, Paul (registration no. 44787) on behalf of all attorneys/agents associated with Customer Number 23524 . All attorneys/agents associated with Cusotmer Number 23524 have been withdrawn.

Since there are no remaining attorneys of record, all future communications from the Office will be directed to the first named inventor or assignee that has properly made itself of record pursuant to 37 CFR 3.71, with correspondence address:

Name	DOUBLE FUSION INC.
Name2	
Address 1	2434 MAIN STREET
Address 2	SUITE 202
City	SANTA MONICA
State	CA
Postal Code	90405
Country	US

As a reminder, requester is required to inform the first named inventor or assignee that has properly made itself of record pursuant to 37 CFR 3.71 of the electronically processed petition.

Telephone inquiries concerning this decision should be directed to the Patent Electronic Business Center (EBC) at 866-217-9197.

Office of Petitions

Doc Code: PET.AUTO **Document Description: Petition automatically granted by EFS-Web**	PTO/SB/83 U.S. Patent and Trademark Office Department of Commerce

Electronic Petition Request	**REQUEST FOR WITHDRAWAL AS ATTORNEY OR AGENT AND CHANGE OF CORRESPONDENCE ADDRESS**
Application Number	12546075
Filing Date	24-Aug-2009
First Named Inventor	Andrew Radin
Art Unit	2192
Examiner Name	TUAN DAM
Attorney Docket Number	046185-0125
Title	SYSTEM FOR PROVIDING DISTRACTION-FREE CONTENT IN A FLASH-BASED GAMING ENVIRONMENT

◉ Please withdraw me as attorney or agent for the above identified patent application and the practitioners of record associated with Customer Number: 23524

The reason(s) for this request are those described in 37 CFR:

10.40(c)(1)(iv)

Certifications

☒ I/We have given reasonable notice to the client, prior to the expiration of the response period, that the practitioner(s) intend to withdraw from employment

☒ I/We have delivered to the client or a duly authorized representative of the client all papers and property (including funds) to which the client is entitled

☒ I/We have notified the client of any responses that may be due and the time frame within which the client must respond

Change the correspondence address and direct all future correspondence to the first named inventor or assignee that has properly made itself of record pursuant to 37 CFR 3.71:

Name	DOUBLE FUSION INC.
Address	2434 MAIN STREET SUITE 202
City	SANTA MONICA
State	CA
Postal Code	90405
Country	US

I am authorized to sign on behalf of myself and all withdrawing practitioners.	
Signature	/Hunter, Paul/
Name	Hunter, Paul
Registration Number	44787

Doc Code: PET.AUTO Document Description: Petition automatically granted by EFS-Web	PTO/SB/140 U.S. Patent and Trademark Office Department of Commerce

Electronic Petition Request	**PETITION TO WITHDRAW AN APPLICATION FROM ISSUE AFTER PAYMENT OF THE ISSUE FEE UNDER 37 CFR 1.313(c)**
Application Number	12546087
Filing Date	24-Aug-2009
First Named Inventor	Paul Ignatius
Art Unit	2185
Examiner Name	YONG CHOE
Attorney Docket Number	COMMV.23CPCP1CC
Title	SYSTEMS AND METHODS FOR TRANSFERRING DATA IN A BLOCK-LEVEL STORAGE OPERATION

An application may be withdrawn from issue for further action upon petition by the applicant. To request that the Office withdraw an application from issue, applicant must file a petition under this section including the fee set forth in § 1.17(h) and a showing of good and sufficient reasons why withdrawal of the application from issue is necessary.

APPLICANT HEREBY PETITIONS TO WITHDRAW THIS APPLICATION FROM ISSUE UNDER 37 CFR 1.313(c).

A grantable petition requires the following items:
(1) Petition fee; and
(2) One of the following reasons:
(a) Unpatentability of one or more claims, which must be accompanied by an unequivocal statement that one or more claims are unpatentable, an amendment to such claim or claims, and an explanation as to how the amendment causes such claim or claims to be patentable;
(b) Consideration of a request for continued examination in compliance with § 1.114 (for a utility or plant application only); or
(c) Express abandonment of the application. Such express abandonment may be in favor of a continuing application, but not a CPA under 37 CFR 1.53(d).

Petition Fee

☐ Applicant claims SMALL ENTITY status. See 37 CFR 1.27.

☐ Applicant is no longer claiming SMALL ENTITY status. See 37 CFR 1.27(g)(2).

☐ Applicant(s) status remains as SMALL ENTITY.

☒ Applicant(s) status remains as other than SMALL ENTITY

Reason for withdrawal from issue

○ One or more claims are unpatentable

◉ Consideration of a request for continued examination (RCE) (List of Required Documents and Fees)

○ Applicant hereby expressly abandons the instant application (any attorney/agent signing for this reason must have power of attorney pursuant to 37 CFR 1.32(b)).

RCE request,submission, and fee.

☐ I certify, in accordance with 37 CFR 1.4(d)(4) that : The RCE request ,submission, and fee have already been filed in the above-identified application on

☒ Are attached.

THIS PORTION MUST BE COMPLETED BY THE SIGNATORY OR SIGNATORIES

I certify, in accordance with 37 CFR 1.4(d)(4) that I am:

◉ An attorney or agent registered to practice before the Patent and Trademark Office who has been given power of attorney in this application.

○ An attorney or agent registered to practice before the Patent and Trademark Office, acting in a representative capacity.

○ A sole inventor

○ A joint inventor; I certify that I am authorized to sign this submission on behalf of all of the inventors

○ A joint inventor; all of whom are signing this e-petition

○ The assignee of record of the entire interest that has properly made itself of record pursuant to 37 CFR 3.71

Signature	/Karen J. Lenker/
Name	Karen J. Lenker
Registration Number	54618

UNITED STATES PATENT AND TRADEMARK OFFICE

Commissioner for Patents
United States Patent and Trademark Office
P.O. Box 1450
Alexandria, VA 22313-1450
www.uspto.gov

Decision Date : April 13,2011

In re Application of :

Paul Ignatius

DECISION ON PETITION

UNDER CFR 1.313(c)(2)

Application No : 12546087

Filed : 24-Aug-2009

Attorney Docket No : COMMV.23CPCP1CC

This is an electronic decision on the petition under 37 CFR 1.313(c)(2), filed April 13,2011 , to withdraw the above-identified application from issue after payment of the issue fee.

The petition is **GRANTED.**

The above-identified application is withdrawn from issue for consideration of a submission under 37 CFR 1.114 (request for continued examination). See 37 CFR 1.313(c)(2).

Petitioner is advised that the issue fee paid in this application cannot be refunded. If, however, this application is again allowed, petitioner may request that it be applied towards the issue fee required by the new Notice of Allowance.

Telephone inquiries concerning this decision should be directed to the Patent Electronic Business Center (EBC) at 866-217-9197.

This application file is being referred to Technology Center AU 2185 for processing of the request for continuing examination under 37 CFR 1.114 .

Office of Petitions

UNITED STATES PATENT AND TRADEMARK OFFICE

UNITED STATES DEPARTMENT OF COMMERCE
United States Patent and Trademark Office
Address: COMMISSIONER FOR PATENTS
P.O. Box 1450
Alexandria, Virginia 22313-1450
www.uspto.gov

APPLICATION NO.	FILING DATE	FIRST NAMED INVENTOR	ATTORNEY DOCKET NO.	CONFIRMATION NO.
12/546,109	08/24/2009	Yukihiro Urakawa	SUZU1980	2790

7590 02/16/2011
Sprinkle IP Law Group
1301 W. 25th Street
Suite 408
Austin, TX 78705

EXAMINER
TRAN, THIEN F

ART UNIT	PAPER NUMBER
2895	

MAIL DATE	DELIVERY MODE
02/16/2011	PAPER

DECISION GRANTING PETITION UNDER 37 CFR 1.138(d)

The declaration of express abandonment is recognized

This is in response to the petition under 37 CFR 1.138(d), requesting for a refund of any previously paid search fee and excess claims fee in the above-identified application.

The petition is granted.

The express abandonment is recognized. Any previously paid search fee and excess claims fee are hereby refunded.

Telephone inquiries should be directed to the Office of Data Management at (571) 272-4200.

Patent Publication Branch
Office of Data Management

PTO/SB/20PCT-KR (06-10)
Approved for use through 01/31/2012. OMB 0651-0058
U.S. Patent and Trademark Office; U. S. DEPARTMENT OF COMMERCE
Under the Paperwork Reduction Act of 1995, no persons are required to respond to a collection of information unless it displays a valid OMB control number.

REQUEST FOR PARTICIPATION IN THE PATENT COOPERATION TREATY - PATENT PROSECUTION HIGHWAY (PCT-PPH) PILOT PROGRAM BETWEEN THE KOREAN INTELLECTUAL PROPERTY OFFICE (KIPO) AND THE USPTO

Application No:	12/546,115	Filing date:	August 24, 2009
First Named Inventor:	Michael G. Pollack		
Title of the Invention:	Droplet Actuator Devices, Systems, and Methods		

THIS REQUEST FOR PARTICIPATION IN THE PCT-PPH PILOT PROGRAM ALONG WITH THE REQUIRED DOCUMENTS MUST BE SUBMITTED VIA EFS-WEB. INFORMATION REGARDING EFS-WEB IS AVAILABLE AT HTTP://WWW.USPTO.GOV/EBC/EFS_HELP.HTML

APPLICANT HEREBY REQUESTS PARTICIPATION IN THE PCT-PPH PROGRAM AND PETITIONS TO MAKE THE ABOVE-IDENTIFIED APPLICATION SPECIAL UNDER THE PCT-PPH PROGRAM.

The above-identified application is (1) a national stage entry of the corresponding PCT application, or (2) a national stage entry of another PCT application which claims priority to the corresponding PCT application, or (3) a national application that claims domestic/ foreign priority to the corresponding PCT application, or (4) a national application which forms the basis for the priority claim in the corresponding PCT application, or (5) a continuing application of a U.S. application that satisfies one of (1) to (4) above, or (6) a U.S. application that claims domestic benefit to a U.S. provisional application which forms the basis for the priority claim in the corresponding PCT application.

The corresponding PCT application number(s) is/are: PCT/US2009/043774

The international filing date of the corresponding PCT application(s) is/are: May 13, 2009

I. List of Required Documents:

a. **A copy of the latest international work product (WO/ISA, WO/IPEA, or IPER) in the above–identified corresponding PCT application(s)**

- [x] Is attached.
- [ ] Is not attached because the document is already in the U.S. application.

b. **A copy of all claims which were indicated as having novelty, inventive step and industrial applicability in the above-identified corresponding PCT application(s).**

- [ ] Is attached.
- [x] Is not attached because the document is already in the U.S. application.

c. **English translations of the documents in a. and b. above are attached (if the documents are not in the English language). A statement that the English translation is accurate is attached for the document in b. above.**

This collection of information is required by 35 U.S.C. 119, 37 CFR 1.55, and 37 CFR 1.102(d). The information is required to obtain or retain a benefit by the public, which is to file (and by the USPTO to process) an application. Confidentiality is governed by 35 U.S.C. 122 and 37 CFR 1.11 and 1.14. This collection is estimated to take 2 hours to complete, including gathering, preparing, and submitting the completed application form to the USPTO. Time will vary depending upon the individual case. Any comments on the amount of time you require to complete this form and/or suggestions for reducing this burden should be sent to the Chief Information Officer, U.S. Patent and Trademark Office, U.S. Department of Commerce, P.O. Box 1450, Alexandria, VA 22313-1450. DO NOT SEND FEES OR COMPLETED FORMS TO THIS ADDRESS.

Approved for use through 01/31/2012. OMB 0651-0058
U.S.Patent and Trademark Office; U.S. DEPARTMENT OF COMMERCE
Under the Paperwork Reduction Act of 1995, no persons are required to respond to a collection of information unless it displays a valid OMB control number.

REQUEST FOR PARTICIPATION IN THE PCT-PPH PILOT PROGRAM BETWEEN THE KIPO AND THE USPTO

(continued)

Application No.:	12/546,115
First Named Inventor:	Michael G. Pollack

d. **(1) An information disclosure statement listing the documents cited in the international work products (ISR, WO/ISA, WO/IPEA, IPER) of the corresponding PCT application.**

☐ Is attached

☑ Has already been filed in the above-identified U.S. application on May 27, 2010; January 4, 2011

(2) Copies of all documents (except) for U.S. patents or U.S. patent application publications)

☐ Are attached.

☑ Have already been filed in the above-identified U.S. application on January 4, 2011

II. Claims Correspondence Table:

Claims in US Application	Patentable Claims in the corresponding PCT Application	Explanation regarding the correspondence
1-79	1-79	Corresponding claims filed in U.S. as Continuation of PCT case and
		deemed patentable in corresponding PCT case.

III. All the claims in the US application sufficiently correspond to the patentable claims in the corresponding PCT application.

Signature /E. Eric Mills/	Date 01-07-2011
Name (Print/Typed) E. Eric Mills	Registration Number 47,795

Privacy Act Statement

The **Privacy Act of 1974 (P.L. 93-579)** requires that you be given certain information in connection with your submission of the attached form related to a patent application or patent. Accordingly, pursuant to the requirements of the Act, please be advised that: (1) the general authority for the collection of this information is 35 U.S.C. 2(b)(2); (2) furnishing of the information solicited is voluntary; and (3) the principal purpose for which the information is used by the U.S. Patent and Trademark Office is to process and/or examine your submission related to a patent application or patent. If you do not furnish the requested information, the U.S. Patent and Trademark Office may not be able to process and/or examine your submission, which may result in termination of proceedings or abandonment of the application or expiration of the patent.

The information provided by you in this form will be subject to the following routine uses:

1. The information on this form will be treated confidentially to the extent allowed under the Freedom of Information Act (5 U.S.C. 552) and the Privacy Act (5 U.S.C 552a). Records from this system of records may be disclosed to the Department of Justice to determine whether disclosure of these records is required by the Freedom of Information Act.
2. A record from this system of records may be disclosed, as a routine use, in the course of presenting evidence to a court, magistrate, or administrative tribunal, including disclosures to opposing counsel in the course of settlement negotiations.
3. A record in this system of records may be disclosed, as a routine use, to a Member of Congress submitting a request involving an individual, to whom the record pertains, when the individual has requested assistance from the Member with respect to the subject matter of the record.
4. A record in this system of records may be disclosed, as a routine use, to a contractor of the Agency having need for the information in order to perform a contract. Recipients of information shall be required to comply with the requirements of the Privacy Act of 1974, as amended, pursuant to 5 U.S.C. 552a(m).
5. A record related to an International Application filed under the Patent Cooperation Treaty in this system of records may be disclosed, as a routine use, to the International Bureau of the World Intellectual Property Organization, pursuant to the Patent Cooperation Treaty.
6. A record in this system of records may be disclosed, as a routine use, to another federal agency for purposes of National Security review (35 U.S.C. 181) and for review pursuant to the Atomic Energy Act (42 U.S.C. 218(c)).
7. A record from this system of records may be disclosed, as a routine use, to the Administrator, General Services, or his/her designee, during an inspection of records conducted by GSA as part of that agency's responsibility to recommend improvements in records management practices and programs, under authority of 44 U.S.C. 2904 and 2906. Such disclosure shall be made in accordance with the GSA regulations governing inspection of records for this purpose, and any other relevant (*i.e.*, GSA or Commerce) directive. Such disclosure shall not be used to make determinations about individuals.
8. A record from this system of records may be disclosed, as a routine use, to the public after either publication of the application pursuant to 35 U.S.C. 122(b) or issuance of a patent pursuant to 35 U.S.C. 151. Further, a record may be disclosed, subject to the limitations of 37 CFR 1.14, as a routine use, to the public if the record was filed in an application which became abandoned or in which the proceedings were terminated and which application is referenced by either a published application, an application open to public inspection or an issued patent.
9. A record from this system of records may be disclosed, as a routine use, to a Federal, State, or local law enforcement agency, if the USPTO becomes aware of a violation or potential violation of law or regulation.

UNITED STATES PATENT AND TRADEMARK OFFICE

UNITED STATES DEPARTMENT OF COMMERCE
United States Patent and Trademark Office
Address: COMMISSIONER FOR PATENTS
P.O. Box 1450
Alexandria, Virginia 22313-1450
www.uspto.gov

APPLICATION NO.	FILING DATE	FIRST NAMED INVENTOR	ATTORNEY DOCKET NO.	CONFIRMATION NO.
12/546,115	08/24/2009	Michael G. Pollack	060885-00244.096PCT/US1	2799

67945 7590 04/08/2011
ADVANCED LIQUID LOGIC, INC.
C/O WARD AND SMITH, P.A.
1001 COLLEGE COURT
P.O. BOX 867
NEW BERN, NC 28563-0867

EXAMINER
THOMAS, DAVID C

ART UNIT	PAPER NUMBER
1637	

NOTIFICATION DATE	DELIVERY MODE
04/08/2011	ELECTRONIC

Please find below and/or attached an Office communication concerning this application or proceeding.

The time period for reply, if any, is set in the attached communication.

Notice of the Office communication was sent electronically on above-indicated "Notification Date" to the following e-mail address(es):

patents@wardandsmith.com
patents@liquid-logic.com
eem@wardandsmith.com

UNITED STATES PATENT AND TRADEMARK OFFICE

Commissioner for Patents
United States Patent and Trademark Office
P.O. Box 1450
Alexandria, VA 22313-1450
www.uspto.gov

ADVANCED LIQUID LOGIC, INC.
C/O WARD AND SMITH, P.A.
1001 College Court
P.O. Box 867
New Bern, NC 28563-0867

APR 0 8 2011

In re Application of	:	DECISION ON REQUEST TO
POLLACK ET AL.	:	PARTICIPATE IN PATENT
Application No. 12/546,115	:	PROSECUTION HIGHWAY
Filed: August 24, 2009	:	PROGRAM AND PETITION
Attorney Docket No.	:	TO MAKE SPECIAL UNDER
060885-00244.096PCT/US1	:	37 CFR 1.102(a)

This is a decision on the request to participate in the Patent Cooperation Treaty - Patent Prosecution Highway (PCT-PPH) program and the petition under 37 CFR 1.102(a), filed January 7, 2011, to make the above-identified application special.

The request and petition are **DISMISSED**.

A grantable request to participate in the PCT-PPH program and petition to make special require:

(1) The U.S. application is (1) a national stage entry of the corresponding PCT application, or (2) a national stage entry of another PCT application which claims priority to the corresponding PCT application, or (3) a national stage application that claims domestic/foreign priority to the corresponding PCT application, or (4) a national application which forms the basis for the priority claim in the corresponding PCT application, or (5) a continuing application of a U.S. application that satisfies one of (1) to (4) above, or (6) a U.S. application that claims domestic benefit to a U.S. provisional application which forms the basis for the priority claim in the corresponding PCT application;
(2) The latest work product in the international phase of the PCT application corresponding to the U.S. application, namely the WO/ISA, or the WO/IPEA, or the IPER, indicates at least one claim in the PCT application has novelty, inventive step and industrial applicability;
(3) All the claims in the U.S. application must sufficiently correspond or be amended to sufficiently correspond to one or more of those claims indicated as having novelty, inventive step and industrial applicability and free of any observation described in Box VIII in the latest work product of the corresponding PCT application;
(4) Examination of the U.S. application has not begun;
(5) Applicant must submit a copy of latest international work product, WO/ISA, or WO/IPEA or IPER, which indicated that the claim(s) has/have novelty, inventive step and industrial applicability along with an English translation thereof if the copy of the latest international work product is not in the English language;

(6) Applicant must submit the claims from the corresponding PCT application which were indicated as having novelty, inventive step and industrial applicability in the latest work product of the PCT application along with an English translation thereof and a statement that the English translation is accurate if the claims are not in the English language;
(7) Applicant must submit a claim correspondence table in English; and
(8) Applicant must submit an IDS listing the documents cited in the international work products (ISR, WO/ISA, WO/IPEA, IPER) of the PCT application along with copies of documents except U.S. patents or U.S. patent application publications.

The request to participate in the PPH program and petition fails to comply with the requirement because:

Examination of the U.S. application has begun.

Applicant is given a time period of **ONE MONTH or THIRTY DAYS**, whichever is longer, to correct the deficiencies. **NO EXTENSION OF TIME UNDER 37 CFR 1.136 IS PERMITTED.** If the deficiencies are not corrected with the time period given, the application will await action in its regular turn.

Response must be submitted via EFS-Web with the document description: Petition to make special under Patent Pros Hwy. Information regarding EFS-Web is available at http://www.uspto.gov/ebc/efs_help.html.

Telephone inquiries concerning this decision should be directed to Cecilia Tsang at 571-272-0562.

All other inquiries concerning the examination or status of the application should be directed to Patent Application Information Retrieval (PAIR) system.

Cecilia Tsang
Supervisory Patent Examiner
TC 1600

UNITED STATES PATENT AND TRADEMARK OFFICE

Commissioner for Patents
United States Patent and Trademark Office
P.O. Box 1450
Alexandria, VA 22313-1450
www.uspto.gov

67945
ADVANCED LIQUID LOGIC, INC.
c/o WARD & SMITH, P.A.
1001 College Court
P.O. Box 867
New Bern, NC 28563-0867

MAILED
JUL 14 2011
PCT LEGAL ADMINISTRATION

In re Application of
POLLACK *et al*
Application No.: 12/546,115
Filing Date: August 24, 2009
Attorney Docket No.: 060885-00244.096
For: DROPLET ACTUATOR DEVICES, SYSTEMS, AND METHODS

DECISION

This is a decision on the "Petition for Unintentionally Delayed Priority Claim Under 37 CFR §1.78(a)(3)" filed March 4, 2011 to accept an unintentionally delayed claim under 35 U.S.C. §§120, 365(c) and 119(e) for the benefit of prior-filed applications set forth in the concurrently filed Supplemental Application Data Sheet (ADS).

The petition is **GRANTED**.

The present nonprovisional application was filed after November 29, 2000, and the claim herein for the benefit of priority to the prior-filed applications is submitted after expiration of the period specified in 37 CFR 1.78(a)(2)(ii) and 1.78(a)(5)(ii). Therefore, this is a proper petition under 37 CFR 1.78(a)(3) and 1.78(a)(6).

(1) the reference required by 35 U.S.C. § 120, § 119(e) and 37 CFR 1.78(a)(2)(i) and 1.78(a)(5)(i) of the prior-filed application, unless previously submitted;
(2) the surcharge set forth in § 1.17(t); and
(3) a statement that the entire delay between the date the claim was due under 37 CFR 1.78(a)(2)(ii) and 1.78(a)(5)(ii) and the date the claim was filed was unintentional. The Director may require additional information where there is a question whether the delay was unintentional.

The petition complies with the requirements for a grantable petition under 37 CFR §§ 1.78(a)(3) and 1.78(a)(6) in that (1) a reference to the prior-filed applications have been included in an ADS filed pursuant to 37 CFR 1.76, as provided by 37 CFR 1.78(a)(2)(iii) and 37 CFR 1.78(a)(5)(ii); (2) the surcharge fee required by 37 CFR 1.17(t) has been submitted; and (3) Applicants' statement in the petition is construed as meaning that "the entire delay between the date the claim was due under 37 CFR 1.78(a)(2)(ii) and 1.78(a)(5)(ii) and the date the claim was filed was unintentional."

If this is incorrect, applicant **MUST IMMEDIATELY** notify the Office of PCT Legal

Administration. As so construed, then item (3) is satisfied.

Accordingly, having found that the petition for acceptance of an unintentionally delayed claim for the benefit of priority under 35 U.S.C. §§ 120 and 119(e) to the prior-filed applications satisfies the conditions of 37 CFR §§ 1.78(a)(3) and 1.78(a)(6), the petition is granted.

The granting of the petition to accept the delayed benefit claim to the prior-filed applications under 37 CFR §§ 1.78(a)(3) and 1.78(a)(6) should not be construed as meaning that this application is entitled to the benefit of the filing date of the prior-filed applications. In order for this application to be entitled to the benefit of the prior-filed applications, all other requirements under 35 U.S.C. §§120 and 365(c) and 1.78(a)(1) and (a)(2) and under 35 U.S.C. §119(e) and 37 CFR 1.78(a)(4) and (a)(5) must be met. Similarly, the fact that the corrected Filing Receipt accompanying this decision on petition includes the prior-filed applications should not be construed as meaning that applicant is entitled to the claim for benefit of priority to the prior-filed applications noted thereon. Accordingly, the examiner will, in due course, consider this benefit claim and determine whether this application is entitled to the benefit of the earlier filing date.

A corrected Filing Receipt, which includes the priority claim to the prior-filed applications, accompanies this decision on petition.

Any inquiries concerning this decision may be directed to James Thomson at (571) 272-3302. All other inquiries concerning either the examination procedures or status of the application should be directed to the Technology Center.

This matter is being referred to the examiner of Technology Center Art Unit 1637 for appropriate action on the ADS filed April 8, 2011, including consideration of applicant's entitlement to claim benefit of priority under 35 U.S.C. §§ 120,§ 119(e) and 365(c) to the prior-filed applications.

Boris Milef
Legal Examiner
Office of PCT Legal Administration

UNITED STATES PATENT AND TRADEMARK OFFICE

Commissioner for Patents
United States Patent and Trademark Office
P.O. Box 1450
Alexandria, VA 22313-1450
www.uspto.gov

ALSTON & BIRD, LLP
PIONEER HI-BRED INTERNATIONAL, INC.
BANK OF AMERICA PLAZA
101 SOUTH TRYON STREET
SUITE 4000
CHARLOTTE, NC 28280-4000

MAILED

MAY 05 2011

OFFICE OF PETITIONS

In re Application of	:	
Zhongsen Li	:	
Application No. 12/546,157	:	DECISION ON PETITION
Filed: August 24, 2009	:	TO WITHDRAW
Attorney Docket No. 035718/396807	:	FROM RECORD
	:	

This is a decision on the Request to Withdraw as attorney or agent of record under 37 C.F.R. § 1.36(b), filed March 11, 2011.

The request is **DISMISSED** as moot.

A review of the file record indicates that the power of attorney to Alston & Bird, LLP has been revoked by the assignee of the patent application on March 29, 2011. Accordingly, the request to withdraw under 37 C.F.R. § 1.36(b) is moot.

All future communications from the Office will continue to be directed to the below-listed address until otherwise notified by applicant.

Telephone inquires concerning this decision should be directed to undersigned at 571-272- 1642.

/AMW/
April M. Wise
Petitions Examiner
Office of Petitions

UNITED STATES PATENT AND TRADEMARK OFFICE

UNITED STATES DEPARTMENT OF COMMERCE
United States Patent and Trademark Office
Address: COMMISSIONER FOR PATENTS
P.O. Box 1450
Alexandria, Virginia 22313-1450
www.uspto.gov

APPLICATION NO.	FILING DATE	FIRST NAMED INVENTOR	ATTORNEY DOCKET NO.	CONFIRMATION NO.
12/546,157	08/24/2009	ZHONGSEN LI	035718/396807	2882

26691 7590 07/14/2011
POTTER ANDERSON & CORROON LLP
ATTN: JANET E. REED, PH.D.
P.O. BOX 951
WILMINGTON, DE 19899-0951

EXAMINER
BUI, PHUONG T

ART UNIT	PAPER NUMBER
1638	

MAIL DATE	DELIVERY MODE
07/14/2011	PAPER

Please find below and/or attached an Office communication concerning this application or proceeding.

The time period for reply, if any, is set in the attached communication.

UNITED STATES PATENT AND TRADEMARK OFFICE

Commissioner for Patents
United States Patent and Trademark Office
P.O. Box 1450
Alexandria, VA 22313-1450
www.uspto.gov

July 14, 2011

POTTER ANDERSON & CORROON LLP
ATTN: JANET E. REED, PH.D.
P.O. BOX 951
WILMINGTON DE 19899-0951

In re Application of	:	
Zhongsen Li	:	**DECISION ON PETITION**
Application No. 12546157	:	
Filed: 8/24/2009	:	
Attorney Docket No. 035718/396807	:	

This is a decision on the Petition to Accept Color Drawings under 37 C.F.R 1.84(a)(2), received in the United States Patent and Trademark Office (USPTO) October 12, 2010.

The petition is **DISMISSED.**

A grantable petition under 37 C.F.R. 1.84(a)(2) must be accompanied by the following.

1. The fee set forth under 37 C.F.R. 1.17(h),
2. Three (3) sets of the color drawings in question, (One (1) set for EFS filings), and
3. The specification containing the following language as the **first paragraph in** that portion of the specification relating to **the brief description of the drawings**.

"The patent or application file contains at least one drawing executed in color. Copies of this patent or patent application publication with color drawing(s) will be provided by the Office upon request and payment of the necessary fee."

The petition did not meet the following requirement(s). 1 ☐ 2 ☐ 3 ☑

The color drawings paragraph was added at the end of the brief description by the amendment of 10/12/2010. It must be the first paragraph in the brief description.

A renewed petition filed under 37 C.F.R. 1.84(a)(2) must be filed within TWO (2) MONTHS of this decision. If a renewed petition is not filed within the TWO (2) Months of this decision the drawings will be printed in black and white.

Telephone inquires relating to this decision may be directed to the undersigned in the Office of Data Management at 571-272-4200.

/Don Fairchild/
Office of Data Management
Publications Branch

UNITED STATES PATENT AND TRADEMARK OFFICE

Commissioner for Patents
United States Patent and Trademark Office
P.O. Box 1450
Alexandria, VA 22313-1450
www.uspto.gov

August 11, 2011

POTTER ANDERSON & CORROON LLP
ATTN: JANET E. REED, PH.D.
P.O. BOX 951
WILMINGTON DE 19899-0951

In re Application of	:	
Zhongsen Li	:	**DECISION ON PETITION**
Application No. 12546157	:	
Filed: 8/24/2009	:	***ACCEPTANCE OF COLOR***
Attorney Docket No. 035718/396807	:	***DRAWINGS***

This is a decision on the Petition to Accept Color Drawings under 37 C.F.R 1.84 (a) (2), received in the United States Patent and Trademark Office (USPTO) July 29, 2011.

The petition is **GRANTED**.

A grantable petition under 37 C.F.R. 1.84(a) (2) must be accompanied by the following.

1. The fee set forth under 37 C.F.R. 1.17(h),
2. Three (3) sets of the color drawings in question, or (1) set if filed via EFS, and
3. The specification contains appropriate language referring to the color drawings as the first paragraph in that portion of the specification relating to the brief description of the drawings.

The petition was accompanied by all of the required fees and drawings. The specification contains the appropriate language. Therefore, the petition is GRANTED.

Telephone inquires relating to this decision may be directed to the undersigned in the Office of Data Management at 571-272-4200.

/Don Fairchild/
Office of Data Management
Publications Branch

UNITED STATES PATENT AND TRADEMARK OFFICE

UNITED STATES DEPARTMENT OF COMMERCE
United States Patent and Trademark Office
Address: COMMISSIONER FOR PATENTS
P.O. Box 1450
Alexandria, Virginia 22313-1450
www.uspto.gov

APPLICATION NO.	FILING DATE	FIRST NAMED INVENTOR	ATTORNEY DOCKET NO.	CONFIRMATION NO.
12/546,165	08/24/2009	Kenshi Ueda	050083-0246	2905

7590 08/05/2011
MCDERMOTT WILL & EMERY LLP
600 13TH STREET, N.W.
WASHINGTON, DC 20005-3096

EXAMINER
DAVIS, MARY ALICE

ART UNIT	PAPER NUMBER
3748	

NOTIFICATION DATE	DELIVERY MODE
08/05/2011	ELECTRONIC

DECISION GRANTING PETITION UNDER 37 CFR 1.138(d)

The declaration of express abandonment is recognized

This is in response to the petition under 37 CFR 1.138(d), requesting for a refund of any previously paid search fee and excess claims fee in the above-identified application.

The petition is granted.

The express abandonment is recognized. Any previously paid search fee and excess claims fee are hereby refunded.

Telephone inquiries should be directed to the Office of Data Management at (571) 272-4200.

Betty Powell

Patent Publication Branch
Office of Data Management

FORM PET651G (Rev. 08/07)

UNITED STATES PATENT AND TRADEMARK OFFICE

Commissioner for Patents
United States Patent and Trademark Office
P.O. Box 1450
Alexandria, VA 22313-1450
www.uspto.gov

WORKMAN NYDEGGER
1000 EAGLE GATE TOWER
60 EAST SOUTH TEMPLE
SALT LAKE CITY, UT 84111

MAILED

AUG 23 2010

OFFICE OF PETITIONS

In re Application of	:	
David V. Arnold, et al.	:	
Application No. 12/546,196	:	DECISION GRANTING PETITION
Filed: August 24, 2009	:	UNDER 37 CFR 1.313(c)(2)
Attorney Docket No. 15455.9.1.2	:	

This is a decision on the petition under 37 CFR 1.313(c)(2), filed August 20, 2010 and supplemented August 23, 2010, to withdraw the above-identified application from issue after payment of the issue fee.

The petition is **GRANTED**.

The above-identified application is withdrawn from issue for consideration of a submission under 37 CFR 1.114 (request for continued examination). *See* 37 CFR 1.313(c)(2).

Petitioner is advised that the issue fee paid on August 13, 2010 cannot be refunded. If, however, this application is again allowed, petitioner may request that it be applied towards the issue fee required by the new Notice of Allowance.[1]

Telephone inquiries concerning this decision should be directed to undersigned at (571) 272-1642. All other inquiries concerning the examination or status of this application should be directed to the Technology Center.

This application is being referred to Technology Center AU 2612 for processing of the request for continued examination under 37 CFR 1.114 and for consideration of the concurrently filed information disclosure statement

/AMW/
April M. Wise
Petitions Examiner
Office of Petitions

---

[1] *The request to apply the issue fee to the new Notice may be satisfied by completing and returning the new Part B – Fee(s) Transmittal Form (along with any balance due at the time of submission). Petitioner is advised that the Issue Fee Transmittal Form must be completed and timely submitted to avoid abandonment of the application.*

UNITED STATES PATENT AND TRADEMARK OFFICE

Commissioner for Patents
United States Patent and Trademark Office
P.O. Box 1450
Alexandria, VA 22313-1450
www.uspto.gov

WORKMAN NYDEGGER
1000 EAGLE GATE TOWER
60 EAST SOUTH TEMPLE
SALT LAKE CITY UT 84111

MAILED

SEP 08 2010

OFFICE OF PETITIONS

In re Application:	:	
Arnold et al.	:	
Application No. 12/546,196	:	ON PETITION
Filed: August 24, 2009	:	
Attorney Docket No. 15455.9.1.2	:	

This is a notice regarding your request for acceptance of a fee deficiency submission under 37 CFR 1.28. On September 1, 1998, the Court of Appeals for the Federal Circuit held that 37 CFR 1.28(c) is the sole provision governing the time for correction of the erroneous payment of the issue fee as a small entity. **See DH Technology v. Synergystex International, Inc. 154 F.3d 1333, 47 USPQ2d 1865 (Fed. Cir. Sept. 1, 1998).**

The Office no longer investigates or rejects original or reissue applications under 37 CFR 1.56. **1098 Off. Gaz. Pat. Office 502 (January 3, 1989).** Therefore, nothing in this Notice is intended to imply that an investigation was done.

Your fee deficiency submission under 37 CFR 1.28 is hereby **ACCEPTED**.

This application is no longer entitled to small entity status. Accordingly, all future fees paid in this application must be paid at the large entity rate.

Telephone inquires concerning this decision should be directed to the undersigned at (571) 272-7751.

Joan Olszewski

Joan Olszewski
Petitions Examiner
Office of Petitions

UNITED STATES PATENT AND TRADEMARK OFFICE

Commissioner for Patents
United States Patent and Trademark Office
P.O. Box 1450
Alexandria, VA 22313-1450
www.uspto.gov

DITTHAVONG MORI & STEINER, P.C.
918 Prince Street
Alexandria, VA 22314

MAILED
DEC 17 2010
OFFICE OF PETITIONS

In re Application of
Yu-Piao WANG
Application No. 12/546,198
Filed: August 24, 2009
Attorney Docket No. **P2311US01**

DECISION GRANTING PETITION
UNDER 37 CFR 1.313(c)(2)

This is a decision on the petition under 37 CFR 1.313(c)(2), filed December 17, 2010, to withdraw the above-identified application from issue after payment of the issue fee.

The petition is **GRANTED**.

The above-identified application is withdrawn from issue for consideration of a submission under 37 CFR 1.114 (request for continued examination). See 37 CFR 1.313(c)(2).

Petitioner is advised that the issue fee paid on November 18, 2010 cannot be refunded. If, however, this application is again allowed, petitioner may request that it be applied towards the issue fee required by the new Notice of Allowance.[1]

Telephone inquiries should be directed to the undersigned at (571) 272-7253.

This application is being referred to Technology Center AU 3727 for processing of the request for continued examination under 37 CFR 1.114 and for consideration of the concurrently filed information disclosure statement.

/Monica A. Graves/
Petitions Examiner, Office of Petitions

[1] *The request to apply the issue fee to the new Notice may be satisfied by completing and returning the new Part B – Fee(s) Transmittal Form (along with any balance due at the time of submission). Petitioner is advised that the Issue Fee Transmittal Form* ***must*** *be completed and timely submitted to avoid abandonment of the application.*

UNITED STATES PATENT AND TRADEMARK OFFICE

Commissioner for Patents
United States Patent and Trademark Office
P.O. Box 1450
Alexandria, VA 22313-1450
www.uspto.gov

Workman Nydegger
1000 Eagle Gate Tower
60 East South Temple
Salt Lake City UT 84111

MAILED
AUG 23 2010
OFFICE OF PETITIONS

In re Application of	:	
David V. Arnold, et al.	:	
Application No. 12/546,219	:	DECISION GRANTING PETITION
Filed: August 24, 2009	:	UNDER 37 CFR 1.313(c)(2)
Attorney Docket No. 15455.9.1.1	:	

This is a decision on the petition under 37 CFR 1.313(c)(2), filed, August 20, 2010 to withdraw the above-identified application from issue after payment of the issue fee.

The petition is **GRANTED**.

The above-identified application is withdrawn from issue for consideration of a submission under 37 CFR 1.114 (request for continued examination). *See* 37 CFR 1.313(c)(2).

Petitioner is advised that the issue fee paid on August 13, 2010 cannot be refunded. If, however, this application is again allowed, petitioner may request that it be applied towards the issue fee required by the new Notice of Allowance.[1]

Telephone inquiries should be directed to Terri Johnson at (571) 272-2991.

This application is being referred to Technology Center AU 2612 for processing of the request for continued examination under 37 CFR 1.114 and for consideration of the concurrently filed information disclosure statement.

Terri Johnson
Petitions Examiner
Office of Petitions

[1] *The request to apply the issue fee to the new Notice may be satisfied by completing and returning the new Part B – Fee(s) Transmittal Form (along with any balance due at the time of submission). Petitioner is advised that the Issue Fee Transmittal Form must be completed and timely submitted to avoid abandonment of the application.*

UNITED STATES PATENT AND TRADEMARK OFFICE

Commissioner for Patents
United States Patent and Trademark Office
P.O. Box 1450
Alexandria, VA 22313-1450
www.uspto.gov

WORKMAN NYDEGGER
1000 EAGLE GATE TOWER
60 EAST SOUTH TEMPLE
SALT LAKE CITY, UT 84111

MAILED

SEP 13 2010

OFFICE OF PETITIONS

ON PETITION

In re Application of	:	
Arnold et al.	:	
Application No. 12/546,219	:	
Filed: August 24, 2009	:	
Attorney Docket No. 15455.9.1.1	:	

This is a notice regarding your request for acceptance of a fee deficiency submission under 37 CFR 1.28.

The Office no longer investigates or rejects original or reissue patent under 37 CFR 1.56. **1098 Off. Gaz. Pat. Office 502 (January 3, 1989)**. Therefore, nothing in this Notice is intended to imply that an investigation was done.

Your fee deficiency submission under 37 CFR 1.28 is hereby **ACCEPTED**.

This patent application is no longer entitled to small entity status. Accordingly, all future fees paid in this patent must be paid at the large entity rate.

Inquiries related to this communication should be directed to the undersigned at (571) 272-6059.

A. Kelley

Alicia Kelley
Petitions Examiner
Office of Petitions

PTO/SB/20PCT-KR (06-10)
Approved for use through 01/31/2012. OMB 0651-0058
U.S. Patent and Trademark Office; U. S. DEPARTMENT OF COMMERCE
Under the Paperwork Reduction Act of 1995, no persons are required to respond to a collection of information unless it displays a valid OMB control number.

REQUEST FOR PARTICIPATION IN THE PATENT COOPERATION TREATY - PATENT PROSECUTION HIGHWAY (PCT-PPH) PILOT PROGRAM BETWEEN THE KOREAN INTELLECTUAL PROPERTY OFFICE (KIPO) AND THE USPTO

Application No:	12/546,253	Filing date:	August 24, 2009
First Named Inventor:	Michael G. Pollack		
Title of the Invention:	Method of Detecting an Analyte		

THIS REQUEST FOR PARTICIPATION IN THE PCT-PPH PILOT PROGRAM ALONG WITH THE REQUIRED DOCUMENTS MUST BE SUBMITTED VIA EFS-WEB. INFORMATION REGARDING EFS-WEB IS AVAILABLE AT HTTP://WWW.USPTO.GOV/EBC/EFS_HELP.HTML

APPLICANT HEREBY REQUESTS PARTICIPATION IN THE PCT-PPH PROGRAM AND PETITIONS TO MAKE THE ABOVE-IDENTIFIED APPLICATION SPECIAL UNDER THE PCT-PPH PROGRAM.

The above-identified application is (1) a national stage entry of the corresponding PCT application, or (2) a national stage entry of another PCT application which claims priority to the corresponding PCT application, or (3) a national application that claims domestic/ foreign priority to the corresponding PCT application, or (4) a national application which forms the basis for the priority claim in the corresponding PCT application, or (5) a continuing application of a U.S. application that satisfies one of (1) to (4) above, or (6) a U.S. application that claims domestic benefit to a U.S. provisional application which forms the basis for the priority claim in the corresponding PCT application.

The corresponding PCT application number(s) is/are: PCT/US2009/043774

The international filing date of the corresponding PCT application(s) is/are: May 13, 2009

I. List of Required Documents:

a. **A copy of the latest international work product (WO/ISA, WO/IPEA, or IPER) in the above–identified corresponding PCT application(s)**

☑ Is attached.

☐ Is not attached because the document is already in the U.S. application.

b. **A copy of all claims which were indicated as having novelty, inventive step and industrial applicability in the above-identified corresponding PCT application(s).**

☐ Is attached.

☑ Is not attached because the document is already in the U.S. application.

c. **English translations of the documents in a. and b. above are attached (if the documents are not in the English language). A statement that the English translation is accurate is attached for the document in b. above.**

This collection of information is required by 35 U.S.C. 119, 37 CFR 1.55, and 37 CFR 1.102(d). The information is required to obtain or retain a benefit by the public, which is to file (and by the USPTO to process) an application. Confidentiality is governed by 35 U.S.C. 122 and 37 CFR 1.11 and 1.14. This collection is estimated to take 2 hours to complete, including gathering, preparing, and submitting the completed application form to the USPTO. Time will vary depending upon the individual case. Any comments on the amount of time you require to complete this form and/or suggestions for reducing this burden should be sent to the Chief Information Officer, U.S. Patent and Trademark Office, U.S. Department of Commerce, P.O. Box 1450, Alexandria, VA 22313-1450. DO NOT SEND FEES OR COMPLETED FORMS TO THIS ADDRESS.

Approved for use through 01/31/2012. OMB 0651-0058
U.S.Patent and Trademark Office; U.S. DEPARTMENT OF COMMERCE
Under the Paperwork Reduction Act of 1995, no persons are required to respond to a collection of information unless it displays a valid OMB control number.

REQUEST FOR PARTICIPATION IN THE PCT-PPH PILOT PROGRAM BETWEEN THE KIPO AND THE USPTO

(continued)

Application No.:	12/546,253
First Named Inventor:	Michael G. Pollack

d. **(1) An information disclosure statement listing the documents cited in the international work products (ISR, WO/ISA, WO/IPEA, IPER) of the corresponding PCT application.**

☐ Is attached

☑ Has already been filed in the above-identified U.S. application on May 27, 2010; January 4, 2011

(2) Copies of all documents (except) for U.S. patents or U.S. patent application publications)

☐ Are attached.

☑ Have already been filed in the above-identified U.S. application on January 4, 2011

II. Claims Correspondence Table:

Claims in US Application	Patentable Claims in the corresponding PCT Application	Explanation regarding the correspondence
1-22	83-104	Corresponding claims filed in U.S. as Continuation of PCT case and
		deemed patentable in corresponding PCT case.

III. All the claims in the US application sufficiently correspond to the patentable claims in the corresponding PCT application.

Signature /E. Eric Mills/	Date 01-07-2011
Name (Print/Typed) E. Eric Mills	Registration Number 47,795

Privacy Act Statement

The **Privacy Act of 1974 (P.L. 93-579)** requires that you be given certain information in connection with your submission of the attached form related to a patent application or patent. Accordingly, pursuant to the requirements of the Act, please be advised that: (1) the general authority for the collection of this information is 35 U.S.C. 2(b)(2); (2) furnishing of the information solicited is voluntary; and (3) the principal purpose for which the information is used by the U.S. Patent and Trademark Office is to process and/or examine your submission related to a patent application or patent. If you do not furnish the requested information, the U.S. Patent and Trademark Office may not be able to process and/or examine your submission, which may result in termination of proceedings or abandonment of the application or expiration of the patent.

The information provided by you in this form will be subject to the following routine uses:

1. The information on this form will be treated confidentially to the extent allowed under the Freedom of Information Act (5 U.S.C. 552) and the Privacy Act (5 U.S.C 552a). Records from this system of records may be disclosed to the Department of Justice to determine whether disclosure of these records is required by the Freedom of Information Act.
2. A record from this system of records may be disclosed, as a routine use, in the course of presenting evidence to a court, magistrate, or administrative tribunal, including disclosures to opposing counsel in the course of settlement negotiations.
3. A record in this system of records may be disclosed, as a routine use, to a Member of Congress submitting a request involving an individual, to whom the record pertains, when the individual has requested assistance from the Member with respect to the subject matter of the record.
4. A record in this system of records may be disclosed, as a routine use, to a contractor of the Agency having need for the information in order to perform a contract. Recipients of information shall be required to comply with the requirements of the Privacy Act of 1974, as amended, pursuant to 5 U.S.C. 552a(m).
5. A record related to an International Application filed under the Patent Cooperation Treaty in this system of records may be disclosed, as a routine use, to the International Bureau of the World Intellectual Property Organization, pursuant to the Patent Cooperation Treaty.
6. A record in this system of records may be disclosed, as a routine use, to another federal agency for purposes of National Security review (35 U.S.C. 181) and for review pursuant to the Atomic Energy Act (42 U.S.C. 218(c)).
7. A record from this system of records may be disclosed, as a routine use, to the Administrator, General Services, or his/her designee, during an inspection of records conducted by GSA as part of that agency's responsibility to recommend improvements in records management practices and programs, under authority of 44 U.S.C. 2904 and 2906. Such disclosure shall be made in accordance with the GSA regulations governing inspection of records for this purpose, and any other relevant (*i.e.*, GSA or Commerce) directive. Such disclosure shall not be used to make determinations about individuals.
8. A record from this system of records may be disclosed, as a routine use, to the public after either publication of the application pursuant to 35 U.S.C. 122(b) or issuance of a patent pursuant to 35 U.S.C. 151. Further, a record may be disclosed, subject to the limitations of 37 CFR 1.14, as a routine use, to the public if the record was filed in an application which became abandoned or in which the proceedings were terminated and which application is referenced by either a published application, an application open to public inspection or an issued patent.
9. A record from this system of records may be disclosed, as a routine use, to a Federal, State, or local law enforcement agency, if the USPTO becomes aware of a violation or potential violation of law or regulation.

UNITED STATES PATENT AND TRADEMARK OFFICE

UNITED STATES DEPARTMENT OF COMMERCE
United States Patent and Trademark Office
Address: COMMISSIONER FOR PATENTS
P.O. Box 1450
Alexandria, Virginia 22313-1450
www.uspto.gov

APPLICATION NO.	FILING DATE	FIRST NAMED INVENTOR	ATTORNEY DOCKET NO.	CONFIRMATION NO.
12/546,253	08/24/2009	Michael G. Pollack	060885-00245.096PCT/US2	3057

67945 7590 06/09/2011
ADVANCED LIQUID LOGIC, INC.
C/O WARD AND SMITH, P.A.
1001 COLLEGE COURT
P.O. BOX 867
NEW BERN, NC 28563-0867

EXAMINER
FORMAN, BETTY J

ART UNIT	PAPER NUMBER
1634	

NOTIFICATION DATE	DELIVERY MODE
06/09/2011	ELECTRONIC

Please find below and/or attached an Office communication concerning this application or proceeding.

The time period for reply, if any, is set in the attached communication.

Notice of the Office communication was sent electronically on above-indicated "Notification Date" to the following e-mail address(es):

patents@wardandsmith.com
patents@liquid-logic.com
eem@wardandsmith.com

UNITED STATES PATENT AND TRADEMARK OFFICE

JUN 0 9 2011

Commissioner for Patents
United States Patent and Trademark Office
P.O. Box 1450
Alexandria, VA 22313-1450
www.uspto.gov

ADVANCED LIQUID LOGIC INC.
C/O WARD AND SMITH, P.A.
1001 COLLEGE COURT
P.O. BOX 867
NEW BERN, NC 28563-0867

In re Application of	:	DECISION ON REQUEST TO
POLLACK ET AL.	:	PARTICIPATE IN PATENT
Application No. 12/546,253	:	PROSECUTION HIGHWAY
Filed: August 24, 2009	:	PROGRAM AND PETITION
Attorney Docket No.	:	TO MAKE SPECIAL UNDER
060885-00245.096PCT/US2	:	37 CFR 1.102(a)

This is a decision on the request to participate in the Patent Cooperation Treaty - Patent Prosecution Highway (PCT-PPH) program and the petition under 37 CFR 1.102(a), filed January 7, 2011, to make the above-identified application special.

The request and petition are **DENIED**.

A grantable request to participate in the PCT-PPH program and petition to make special require:

(1) The U.S. application is (1) a national stage entry of the corresponding PCT application, or (2) a national stage entry of another PCT application which claims priority to the corresponding PCT application, or (3) a national stage application that claims domestic/foreign priority to the corresponding PCT application, or (4) a national application which forms the basis for the priority claim in the corresponding PCT application, or (5) a continuing application of a U.S. application that satisfies one of (1) to (4) above, or (6) a U.S. application that claims domestic benefit to a U.S. provisional application which forms the basis for the priority claim in the corresponding PCT application;
(2) The latest work product in the international phase of the PCT application corresponding to the U.S. application, namely the WO/ISA, or the WO/IPEA, or the IPER, indicates at least one claim in the PCT application has novelty, inventive step and industrial applicability;
(3) All the claims in the U.S. application must sufficiently correspond or be amended to sufficiently correspond to one or more of those claims indicated as having novelty, inventive step and industrial applicability and free of any observation described in Box VIII in the latest work product of the corresponding PCT application;
(4) Examination of the U.S. application has not begun;
(5) Applicant must submit a copy of latest international work product, WO/ISA, or WO/IPEA or IPER, which indicated that the claim(s) has/have novelty, inventive step and industrial applicability along with an English translation thereof if the copy of the latest international work product is not in the English language;

(6) Applicant must submit the claims from the corresponding PCT application which were indicated as having novelty, inventive step and industrial applicability in the latest work product of the PCT application along with an English translation thereof and a statement that the English translation is accurate if the claims are not in the English language;
(7) Applicant must submit a claim correspondence table in English; and
(8) Applicant must submit an IDS listing the documents cited in the international work products (ISR, WO/ISA, WO/IPEA, IPER) of the PCT application along with copies of documents except U.S. patents or U.S. patent application publications.

The request to participate in the PCT-PPH program and petition fails to comply with the requirement because:

Examination of the U.S. application has begun. Accordingly, the petition is denied.

Telephone inquiries concerning this decision should be directed to Cecilia Tsang at 571-272-0562.

All other inquiries concerning the examination or status of the application should be directed to Patent Application Information Retrieval (PAIR) system.

Cecilia Tsang
Supervisory Patent Examiner
TC 1600

UNITED STATES PATENT AND TRADEMARK OFFICE

UNITED STATES DEPARTMENT OF COMMERCE
United States Patent and Trademark Office
Address: COMMISSIONER FOR PATENTS
P.O. Box 1450
Alexandria, Virginia 22313-1450
www.uspto.gov

APPLICATION NO.	FILING DATE	FIRST NAMED INVENTOR	ATTORNEY DOCKET NO.	CONFIRMATION NO.
12/546,296	08/24/2009	Yuji Imai	4897.86113	3127

7590 10/21/2010
GREER, BURNS & CRAIN
300 S WACKER DR
25TH FLOOR
CHICAGO, IL 60606

EXAMINER
BARRON JR, GILBERTO

ART UNIT	PAPER NUMBER
2432	

MAIL DATE	DELIVERY MODE
10/21/2010	PAPER

DECISION GRANTING PETITION UNDER 37 CFR 1.138(d)

The declaration of express abandonment is recognized

This is in response to the petition under 37 CFR 1.138(d), requesting for a refund of any previously paid search fee and excess claims fee in the above-identified application.

The petition is granted.

The express abandonment is recognized. Any previously paid search fee and excess claims fee are hereby refunded.

Telephone inquiries should be directed to the Office of Data Management at (571) 272-4200.

Nimi Farmer

Patent Publication Branch
Office of Data Management

Adjustment date: 10/21/2010 NFARMER
[illegible]
[illegible] 540.00 CR

FORM PET651G (Rev. 08/07)

Doc Code: PET.GREEN
Document Description: Petition for Green Tech Pilot

PTO/SB/420 (05-10)
Approved for use through 01/31/2011. OMB 0651-0062
U.S. Patent and Trademark Office; U. S. DEPARTMENT OF COMMERCE
Under the Paperwork Reduction Act of 1995, no persons are required to respond to a collection of information unless it displays a valid OMB control number.

PETITION TO MAKE SPECIAL UNDER THE GREEN TECHNOLOGY PILOT PROGRAM

Attorney Docket Number: 235482	Application Number (if known): 12/546343	Filing date: 08-24-2009
First Named Inventor: James Henry Yager		
Title: SYSTEMS AND METHODS FOR EXHAUST GAS RECIRCULATION		

APPLICANT HEREBY REQUESTS TO PARTICIPATE IN THE GREEN TECHNOLOGY PILOT PROGRAM FOR THE ABOVE-IDENTIFIED APPLICATION. See Instruction Sheet on page 2.

This petition must be timely filed electronically using the USPTO electronic filing system, EFS-Web.

1. By filing this petition:

   Applicant is requesting early publication: Applicant hereby requests early publication under 37 CFR 1.219 and the publication fee set forth in 37 CFR 1.18(d) accompanies this request.

2. By filing this petition: applicant is agreeing to make an election without traverse in a telephonic interview and elect an invention that meets the eligibility requirements set forth in the notice titled "Pilot Program for Green Technologies Including Greenhouse Gas Reduction," as modified by the notice titled "Elimination of Classification Requirement in the Green Technology Pilot Program," each of which was published in the Federal Register, if the Office determines that the claims are not obviously directed to a single invention.

3. This request is accompanied by statements of special status for the eligibility requirement.

4. The application contains no more than three (3) independent claims and twenty (20) total claims.

5. The application does not contain any multiple dependent claims.

6. Other attachments: _____

Signature /John A. Kramer/	Date 11-05-2010
Name (Print/Typed): John A. Kramer	Registration Number 46302

Note: *Signatures of all the inventors or assignees of record of the entire interest or their representative(s) are required in accordance with 37 CFR 1.33 and 11.18. Please see 37 CFR 1.4(d) for the form of the signature. If necessary, submit multiple forms for more than one signature, see below*.*

☐ *Total of _____ forms are submitted.

The information is required to obtain or retain a benefit by the public which is to file (and by the USPTO to process) an application. Confidentiality is governed by 35 U.S.C. 122 and 37 CFR 1.11 and 1.14. This collection is estimated to take 1 hour to complete, including gathering, preparing, and submitting the completed application form to the USPTO. Time will vary depending upon the individual case. Any comments on the amount of time you require to complete this form and/or suggestions for reducing this burden, should be sent to the Chief Information Officer, U.S. Patent and Trademark Office, U.S. Department of Commerce, P.O. Box 1450, Alexandria, VA 22313-1450. DO NOT SEND FEES OR COMPLETED FORMS TO THIS ADDRESS. **SEND TO: Commissioner for Patents, P.O. Box 1450, Alexandria, VA 22313-1450.**

If you need assistance in completing the form, call 1-800-PTO-9199 and select option 2.

UNITED STATES PATENT AND TRADEMARK OFFICE

UNITED STATES DEPARTMENT OF COMMERCE
United States Patent and Trademark Office
Address: COMMISSIONER FOR PATENTS
P.O. Box 1450
Alexandria, Virginia 22313-1450
www.uspto.gov

APPLICATION NO.	FILING DATE	FIRST NAMED INVENTOR	ATTORNEY DOCKET NO.	CONFIRMATION NO.
12/546,343	08/24/2009	James Henry Yager	235482-1	3208

50488 7590 11/19/2010
ALLEMAN HALL MCCOY RUSSELL & TUTTLE LLP
806 SW BROADWAY
SUITE 600
PORTLAND, OR 97205-3335

EXAMINER
TROST IV, WILLIAM GEORGE

ART UNIT	PAPER NUMBER
2472	

MAIL DATE	DELIVERY MODE
11/19/2010	PAPER

Please find below and/or attached an Office communication concerning this application or proceeding.

The time period for reply, if any, is set in the attached communication.

UNITED STATES PATENT AND TRADEMARK OFFICE

Commissioner for Patents
United States Patent and Trademark Office
P.O. Box 1450
Alexandria, VA 22313-1450
www.uspto.gov

MAILED

NOV 18 2010

DIRECTOR OFFICE
TECHNOLOGY CENTER 2400

ALLEMAN HALL MCCOY RUSSELL & TUTTLE LLP
806 SW BROADWAY
SUITE 600
PORTLAND OR 97205-3335

In re Application of	:	
YAGER, James H.	:	DECISION ON PETITION
Application No. 12/546,343	:	TO MAKE SPECIAL UNDER
Filed: August 24, 2009	:	THE GREEN TECHNOLOGY
Attorney Docket No. 235482-1	:	PILOT PROGRAM

This is a decision on the petition under 37 CFR 1.102, filed November 10, 2010, to make the above-identified application special under the pilot program for applications pertaining to Green Technologies as set forth 74 Federal Register Notice 64666 (December 8, 2009).

The petition is **GRANTED**.

A grantable petition to make an application special under 37 CFR 1.102 and the pilot program as set forth in 74 FR 64666 must be directed to a nonprovisional application filed under 35 USC 111(a) or be a national stage entry under 35 USC 371, exclusive of any reissue applications and be filed prior to the date of the notice, December 8, 2009.

In order to qualify for special status, the following requirements must be met. 1) The application must be classified in one of the eligible US classifications listed in section VI of the notice. 2) The application must have no more than 3 independent claims and no more than 20 total claims. 3) The application must not contain any multiple dependent claims. 4) The petition must state the basis for seeking special status, i.e., the claimed invention either: A) materially enhances the quality of the environment or B) materially contributes to: i) the discovery or development of renewable energy resources, ii) the more efficient utilization and conservation of energy resources, or iii) greenhouse gas emission reduction. 5) If the disclosure is not clear on its face that the claimed invention materially contributes under category (A) or (B), the petition must be accompanied by a statement by the applicant, assignee, or an attorney/agent registered to practice before the Office explaining how the materiality standard is met. 6) A statement that applicant will agree to make an election without traverse in a telephonic interview if a restriction requirement is made by the examiner. 7) The petition to make special must be filed electronically. 8) The petition must be filed at least one day prior to the date that a first Office Action appears in the Patent Application Information Retrieval (PAIR) system. 9) The petition must be accompanied by a request for early publication in compliance with 37 CFR 1.219 and include the publication fee as set forth in 37 CFR 1.18(d).

The requirement for a fee for consideration of the petition to make special for applications pertaining to Green Technologies has been waived.

The instant petition complies with items 1 – 9 above. Accordingly, the above-identified application has been accorded "special" status.

Telephone inquires concerning this decision should be directed to Beatriz Prieto at 571-272-3902.

The application is being forwarded to the Technology Center Art Unit 2472 for action on the merits commensurate with this decision.

/Beatriz Prieto/
Beatriz Prieto
Quality Assurance Specialist
Technology Center 2400

SPE RESPONSE FOR CERTIFICATE OF CORRECTION

DATE : **12/30/11**

TO SPE OF : ART UNIT: **3762 Attn: PATEL NIKETA I (SPE)**

SUBJECT : Request for Certificate of Correction for Appl. No.: **12/546381** Patent No.: **8050757**

CofC mailroom date: 12/16/2011

Please respond to this request for a certificate of correction within 7 days.

FOR IFW FILES:

Please review the requested changes/corrections as shown in the **COCIN** document(s) in the IFW application image. No new matter should be introduced, nor should the scope or meaning of the claims be changed.

Please complete the response (see below) and forward the completed response to scanning using document code **COCX**.

FOR PAPER FILES:

Please review the requested changes/corrections as shown in the attached certificate of correction. Please complete this form (see below) and forward it with the file to:

Certificates of Correction Branch (CofC)
Randolph Square – 9D10-A
Palm Location 7580

Note: Please check Abstract & Claim 1
Should the amended claim be amended again or not

Tasneem Siddiqui
Certificates of Correction Branch
703-756-1814 & 703-756-1593

Thank You For Your Assistance

The request for issuing the above-identified correction(s) is hereby:
Note your decision on the appropriate box.

- ☒ **Approved** — **All** changes apply.
- ☐ **Approved in Part** — Specify below which changes **do not** apply.
- ☐ **Denied** — State the reasons for denial below.

Comments: OK for ENTRY 1/3/12

SPE **Art Unit**

UNITED STATES PATENT AND TRADEMARK OFFICE

Commissioner for Patents
United States Patent and Trademark Office
P.O. Box 1450
Alexandria, VA 22313-1450
www.uspto.gov

NOVAK DRUCE + QUIGG LLP
300 NEW JERSEY AVENUE, NW
FIFTH FLOOR
WASHINGTON, DC 20001

MAILED

SEP 16 2010

OFFICE OF PETITIONS

In re Application of	:	
Marvin T. Ling	:	
Application No. 12/546,391	:	DECISION ON PETITION
Filed: August 24, 2009	:	TO WITHDRAW
Attorney Docket No. 9050.010.US0001	:	FROM RECORD
	:	

This is a decision on the Request to Withdraw as attorney or agent of record under 37 C.F.R. § 1.36(b), filed August 9, 2010.

The request is **APPROVED**.

The request was signed by Michael J. Dimino on behalf of the practitioners of record associated with Customer Number 28694.

Applicant is reminded that there is no attorney of record at this time.

The request to change the correspondence of record was left blank and is not accepted. The correspondence address must be: (1) the first named signing inventor; or (2) an intervening assignee of the entire interest under 37 C.F.R 3.71. All future communications from the Office will be directed to the first named signing inventor or the assignee of the entire interest at the first copied address below until otherwise properly notified by the applicant.

Telephone inquiries concerning this decision should be directed to Irvin Dingle at (571) 272-3210.

Irvin Dingle
Petitions Examiner
Office of Petitions

cc: Marvin T. Ling
15333 North Pima Rd.
Suite 116
Scottsdale, AZ 85260

UNITED STATES PATENT AND TRADEMARK OFFICE

UNITED STATES DEPARTMENT OF COMMERCE
United States Patent and Trademark Office
Address: COMMISSIONER FOR PATENTS
P.O. Box 1450
Alexandria, Virginia 22313-1450
www.uspto.gov

APPLICATION NUMBER	FILING OR 371(C) DATE	FIRST NAMED APPLICANT	ATTY. DOCKET NO./TITLE
12/546,391	08/24/2009	Marvin T. Ling	9050.010.US0001

CONFIRMATION NO. 3278

POWER OF ATTORNEY NOTICE

28694
NOVAK DRUCE + QUIGG LLP
300 NEW JERSEY AVENUE, NW
FIFTH FLOOR
WASHINGTON, DC 20001

OC000000043509941

Date Mailed: 09/15/2010

NOTICE REGARDING CHANGE OF POWER OF ATTORNEY

This is in response to the Power of Attorney filed 08/09/2010.

- The withdrawal as attorney in this application has been accepted. Future correspondence will be mailed to the new address of record. 37 CFR 1.33.

/idingle/

Office of Data Management, Application Assistance Unit (571) 272-4000, or (571) 272-4200, or 1-888-786-0101

UNITED STATES PATENT AND TRADEMARK OFFICE

Commissioner for Patents
United States Patent and Trademark Office
P.O. Box 1450
Alexandria, VA 22313-1450
www.uspto.gov
DIW Apr-11

DAVIDSON BERQUIST JACKSON & GOWDEY LLP
4300 WILSON BLVD., 7TH FLOOR
ARLINGTON VA 22203

MAILED
APR 29 2011
OFFICE OF PETITIONS

In re Application of :
Martins, et al. :
Application No. 12/546,498 :
Filed: August 24, 2009 :
Atty Dckt No. **2540-1187** :

ON PETITION

This is a decision on the "Petition under 37 CFR 1.47" filed March 4, 2011. The petition will be treated as a under: (a) 37 CFR 1.48(a)(1) requesting that persons be added as inventors and (b) a petition under 37 CFR 1.183 to waive the requirement of 37 CFR 1.64 that each actual inventor execute the declaration under 37 CFR 1.63.

The petition under 37 CFR 1.48(a) is **GRANTED**.

The petition under 37 CFR 1.183 to waive the requirement of 37 CFR 1.64 that each actual inventor execute the declaration is **GRANTED.**

On August 24, 2009, the above-identified application was filed. In September 25, 2009, an executed declaration naming Carlos Martins and Nei Chiaradia as joint inventors was filed.

On March 4, 2011, petitions were filed, whereby petitioners sought to add Arnaldo Zimmermann as a joint inventor. Petitioner requested status under 37 CFR 1.47(a) because inventors Martins and Chiaradia are unavailable or unwilling to reexcute the declaration under 37 CFR 1.63.

It is noted that a petition under 37 CFR 1.47 is not appropriate under the circumstances of this application. Section 201.03(II)(B) of the *Manual of Patent Examining Procedure* provides guidance on this point. Specifically, it states that:

> 37 CFR 1.47 is available to meet the requirement for an oath or eclaration under 37 CFR 1.63 as for example where A, B, and C were riginally named as inventors and D who refuses to cooperate is to be ater added as an inventor. The oath or declaration under 37 CFR 1.63 of nventor D may be supplied pursuant to 37 CFR 1.47(a), but note that the required 37 CFR 1.48(a)(2) statement must still be supplied by inventor D (an unlikely event in view of the inability to obtain the executed oath or declaration under 37 CFR 1.63), or waiver thereof petitioned under 37 CFR 1.183. Alternatively, where D is to be added as an inventor

> (where inventors A, B, and C have previously executed the application under 37 CFR 1.63) and it is original inventor A who refuses to cooperate, the statement under 37 CFR 1.48(a)(2) is only required to be signed by inventor D. Originally named inventor A is merely required to reexecute an oath or declaration in compliance with 37 CFR 1.63. Petitions under 37 CFR 1.47 are only applicable to an original oath or declaration and are not applicable to the reexecution of another oath or declaration by A. In such circumstances, a petition under 37 CFR 1.183 should be considered requesting waiver of the requirement of 37 CFR 1.64 that each of the actual inventors, i.e., inventor A, execute the oath or declaration, particularly where assignee consent is given to the requested correction. Absent assignee consent, the petition under 37 CFR 1.183 requesting waiver of the reexecution of the oath or declaration will be evaluated as to whether the nonsigning inventor was actually given the opportunity to reexecute the oath or declaration, or whether the nonsigning inventor could not be reached.

In this instance, petitioner has secured the signatures of all of the original joint inventors and secured the signature of the joint inventor to be added. It is also noted that petitioner has secured the consent of the assignee to add inventors Locke and Robinson to the application. Accordingly, this petition is most appropriately treated as a petition under 37 CFR 1.48(a) to add Mr. Zimmermann as a joint inventor and, as to inventors Martins and Chiaradia, a petition under 37 CFR 1.183 to waive the requirement of 37 CFR 1.64 that each actual inventor or inventors execute the declaration.

The fee for the petition under 37 CFR 1.183 is $400.00, not $200.00. Accordingly, deposit account 50-1860 will be charged an additional $200.00.

The application file is being directed to Technology Center GAU 2455 further processing.

Telephone inquiries related to this decision should be directed to the undersigned at 571-272-3222.

/Kenya A. McLaughlin/

Kenya A. McLaughlin
Petitions Attorney
Office of Petitions

Enclosure: Corrected Filing Receipt

UNITED STATES PATENT AND TRADEMARK OFFICE

UNITED STATES DEPARTMENT OF COMMERCE
United States Patent and Trademark Office
Address: COMMISSIONER FOR PATENTS
P.O. Box 1450
Alexandria, Virginia 22313-1450
www.uspto.gov

APPLICATION NUMBER	FILING or 371(c) DATE	GRP ART UNIT	FIL FEE REC'D	ATTY.DOCKET.NO	TOT CLAIMS	IND CLAIMS
12/546,498	08/24/2009	2455	1440	2540-1187	20	4

CONFIRMATION NO. 3502

CORRECTED FILING RECEIPT

42624
DAVIDSON BERQUIST JACKSON & GOWDEY LLP
4300 WILSON BLVD., 7TH FLOOR
ARLINGTON, VA 22203

OC000000047416115

Date Mailed: 04/28/2011

Receipt is acknowledged of this non-provisional patent application. The application will be taken up for examination in due course. Applicant will be notified as to the results of the examination. Any correspondence concerning the application must include the following identification information: the U.S. APPLICATION NUMBER, FILING DATE, NAME OF APPLICANT, and TITLE OF INVENTION. Fees transmitted by check or draft are subject to collection. Please verify the accuracy of the data presented on this receipt. **If an error is noted on this Filing Receipt, please submit a written request for a Filing Receipt Correction. Please provide a copy of this Filing Receipt with the changes noted thereon. If you received a "Notice to File Missing Parts" for this application, please submit any corrections to this Filing Receipt with your reply to the Notice. When the USPTO processes the reply to the Notice, the USPTO will generate another Filing Receipt incorporating the requested corrections**

Applicant(s)

Carlos Martins, Fremont, CA;
Nei Chiaradia, Pleasanton, CA;
Arnaldo Zimmermann, Fremont, CA;

Power of Attorney: The patent practitioners associated with Customer Number 42624

Domestic Priority data as claimed by applicant

Foreign Applications (You may be eligible to benefit from the **Patent Prosecution Highway** program at the USPTO. Please see http://www.uspto.gov for more information.)

If Required, Foreign Filing License Granted: 09/04/2009

The country code and number of your priority application, to be used for filing abroad under the Paris Convention, is **US 12/546,498**

Projected Publication Date: Not Applicable

Non-Publication Request: No

Early Publication Request: No

Title

Method and System for Automatic Location Tracking of Information Technology Components in a Data Center

Preliminary Class

709

PROTECTING YOUR INVENTION OUTSIDE THE UNITED STATES

Since the rights granted by a U.S. patent extend only throughout the territory of the United States and have no effect in a foreign country, an inventor who wishes patent protection in another country must apply for a patent in a specific country or in regional patent offices. Applicants may wish to consider the filing of an international application under the Patent Cooperation Treaty (PCT). An international (PCT) application generally has the same effect as a regular national patent application in each PCT-member country. The PCT process **simplifies** the filing of patent applications on the same invention in member countries, but **does not result** in a grant of "an international patent" and does not eliminate the need of applicants to file additional documents and fees in countries where patent protection is desired.

Almost every country has its own patent law, and a person desiring a patent in a particular country must make an application for patent in that country in accordance with its particular laws. Since the laws of many countries differ in various respects from the patent law of the United States, applicants are advised to seek guidance from specific foreign countries to ensure that patent rights are not lost prematurely.

Applicants also are advised that in the case of inventions made in the United States, the Director of the USPTO must issue a license before applicants can apply for a patent in a foreign country. The filing of a U.S. patent application serves as a request for a foreign filing license. The application's filing receipt contains further information and guidance as to the status of applicant's license for foreign filing.

Applicants may wish to consult the USPTO booklet, "General Information Concerning Patents" (specifically, the section entitled "Treaties and Foreign Patents") for more information on timeframes and deadlines for filing foreign patent applications. The guide is available either by contacting the USPTO Contact Center at 800-786-9199, or it can be viewed on the USPTO website at http://www.uspto.gov/web/offices/pac/doc/general/index.html.

For information on preventing theft of your intellectual property (patents, trademarks and copyrights), you may wish to consult the U.S. Government website, http://www.stopfakes.gov. Part of a Department of Commerce initiative, this website includes self-help "toolkits" giving innovators guidance on how to protect intellectual property in specific countries such as China, Korea and Mexico. For questions regarding patent enforcement issues, applicants may call the U.S. Government hotline at 1-866-999-HALT (1-866-999-4158).

LICENSE FOR FOREIGN FILING UNDER

Title 35, United States Code, Section 184

Title 37, Code of Federal Regulations, 5.11 & 5.15

GRANTED

The applicant has been granted a license under 35 U.S.C. 184, if the phrase "IF REQUIRED, FOREIGN FILING LICENSE GRANTED" followed by a date appears on this form. Such licenses are issued in all applications where

the conditions for issuance of a license have been met, regardless of whether or not a license may be required as set forth in 37 CFR 5.15. The scope and limitations of this license are set forth in 37 CFR 5.15(a) unless an earlier license has been issued under 37 CFR 5.15(b). The license is subject to revocation upon written notification. The date indicated is the effective date of the license, unless an earlier license of similar scope has been granted under 37 CFR 5.13 or 5.14.

This license is to be retained by the licensee and may be used at any time on or after the effective date thereof unless it is revoked. This license is automatically transferred to any related applications(s) filed under 37 CFR 1.53(d). This license is not retroactive.

The grant of a license does not in any way lessen the responsibility of a licensee for the security of the subject matter as imposed by any Government contract or the provisions of existing laws relating to espionage and the national security or the export of technical data. Licensees should apprise themselves of current regulations especially with respect to certain countries, of other agencies, particularly the Office of Defense Trade Controls, Department of State (with respect to Arms, Munitions and Implements of War (22 CFR 121-128)); the Bureau of Industry and Security, Department of Commerce (15 CFR parts 730-774); the Office of Foreign AssetsControl, Department of Treasury (31 CFR Parts 500+) and the Department of Energy.

NOT GRANTED

No license under 35 U.S.C. 184 has been granted at this time, if the phrase "IF REQUIRED, FOREIGN FILING LICENSE GRANTED" DOES NOT appear on this form. Applicant may still petition for a license under 37 CFR 5.12, if a license is desired before the expiration of 6 months from the filing date of the application. If 6 months has lapsed from the filing date of this application and the licensee has not received any indication of a secrecy order under 35 U.S.C. 181, the licensee may foreign file the application pursuant to 37 CFR 5.15(b).

UNITED STATES PATENT AND TRADEMARK OFFICE

Commissioner for Patents
United States Patent and Trademark Office
P.O. Box 1450
Alexandria, VA 22313-1450
www.uspto.gov

BIRCH STEWART KOLASCH & BIRCH
PO BOX 747
FALLS CHURCH VA 22040-0747

MAILED

SEP 01 2010

OFFICE OF PETITIONS

In re Application of	:	
Agadjanyan et al.	:	DECISION ON PETITION
Application No. 12/546,561	:	TO WITHDRAW
Filed: August 24, 2009	:	FROM RECORD
Attorney Docket No. 5909-0101PUS2	:	

This is a decision on the Request to Withdraw as attorney or agent of record under 37 C.F.R. § 1.36(b), filed August 4, 2010.

The request is **NOT APPROVED**.

The Office strongly encourages practitioner(s) requesting withdrawal from representation as practitioner of record in an application to review the record to determine whether he or she is, in fact, of record and how he or she was made of record. For example, the practitioner(s) should determine whether he or she was appointed by naming each practitioner individually or through the use of a Customer Number. If the practitioner(s) was appointed by a specific designation, then the Request should ask that each specified practitioner be withdrawn and should list each practitioner(s) in the Request.

In the instant application, the practitioners were appointed via Customer Number. However, the Customer Number provided in the Request does not match. Accordingly, the request cannot be approved until the appropriate Customer Number has been provided.

All future communications from the Office will be directed to above-listed address until otherwise properly notified by the applicant or a proper change of correspondence address have been submitted.

There is an outstanding Office action, mailed April 15, 2010, which requires a reply. Failure to timely and properly do so will result in abandonment of the application.

Telephone inquires concerning this decision should be directed to the undersigned at (571) 272-3206. All other inquires concerning either the examination or status of the application should be directed to the Technology Center.

Liana Walsh
Petitions Examiner
Office of Petitions

UNITED STATES PATENT AND TRADEMARK OFFICE

Commissioner for Patents
United States Patent and Trademark Office
P.O. Box 1450
Alexandria, VA 22313-1450
www.uspto.gov

BIRCH STEWART KOLASCH & BIRCH
PO BOX 747
FALLS CHURCH VA 22040-0747

MAILED

OCT 22 2010

OFFICE OF PETITIONS

In re Application of	:	
Agadjanyan et al.	:	DECISION ON PETITION
Application No. 12/546,561	:	TO WITHDRAW
Filed: August 24, 2009	:	FROM RECORD
Attorney Docket No. 5909-0101PUS2	:	

This is a decision on the second Request to Withdraw as attorney or agent of record under 37 C.F.R. § 1.36(b), filed September 16, 2010.

The request is **APPROVED**.

A grantable request to withdraw as attorney/agent of record must be signed by every attorney/agent seeking to withdraw or contain a clear indication that one attorney is signing on behalf of another/others. The Office will require the practitioner(s) to certify that he, she or they have: (1) given reasonable notice to the client, prior to the expiration of the reply period, which the practitioner(s) intends to withdraw from employment; (2) delivered to the client or a duly authorized representative of the client all papers and property (including funds) to which the client is entitled; and (3) notified the client of any replies that may be due and the time frame within which the client must respond, pursuant to 37 CFR 10.40 (c).

The request was signed by Susan W. Goman on behalf of all attorneys/agents of record who are associated with Customer Number 02292. All attorneys/agents associated with Customer Number 02292 have been withdrawn. Applicants are reminded that there is no attorney of record at this time.

All future correspondence will be directed to the first-named inventor, Michael G. Agadjanyan, at the address indicated below.

Telephone inquires concerning this decision should be directed to the undersigned at (571) 272-3206. All other inquires concerning either the examination or status of the application should be directed to the Technology Center.

Liana Walsh
Petitions Examiner
Office of Petitions

cc: MICHAEL G. AGADJANYAN
16371 GOTHARD STREET, SUITE H
HUNTINGTON BEACH, CA 92647

UNITED STATES PATENT AND TRADEMARK OFFICE

Commissioner for Patents
United States Patent and Trademark Office
P.O. Box 1450
Alexandria, VA 22313-1450
www.uspto.gov

TUROCY & WATSON, LLP
127 Public Square
57th Floor, Key Tower
CLEVELAND OH 44114

MAILED
AUG 25 2011
OFFICE OF PETITIONS

In re Application of	:	
Han Kiliccote	:	
Application No. 12/546,596	:	DECISION ON PETITION
Filed: August 24, 2009	:	
Attorney Docket No. 023503-0382230	:	

This is a decision on the petition under the unintentional provisions of 37 CFR 1.137(b), filed August 12, 2011, to revive the above-identified application.

The petition is **GRANTED**.

The application became abandoned for failure to properly reply in a timely manner to the non-final Office action mailed July 12, 2010, which set a shortened statutory period for reply of three (3) months. No extensions of time under the provisions of 37 CFR 1.136(a) were obtained. Accordingly, the application became abandoned on October 13, 2010. A Notice of Abandonment was mailed on February 18, 2011.

The petition satisfies the requirements of 37 CFR 1.137(b) in that petitioner has supplied (1) the reply in the form of an amendment, (2) the petition fee of $1,620, and (3) a proper statement of unintentional delay. Accordingly, the amendment is accepted as being unintentionally delayed.

37 CFR 1.137(b)(3) requires a statement that "the entire delay in filing the required reply from the due date for the reply until the filing of a grantable petition pursuant to 37 CFR 1.137(b) was unintentional." Since the statement appearing in the petition varies from the language required by 37 CFR 1.137(b)(3), the statement is being construed as the required statement. Petitioner must notify the Office if this is **not** a correct reading of the statement appearing in the petition.

It is not apparent whether the person signing the statement of unintentional delay was in a position to have firsthand or direct knowledge of the facts and circumstances of the delay at issue. Nevertheless, such statement is being treated as having been made as the result of a reasonable inquiry into the facts and circumstances of such delay. See 37 CFR 10.18(b) and Changes to Patent Practice and Procedure; Final Rule Notice, 62 Fed. Reg. 53131, 53178 (October 10, 1997), 1203 Off. Gaz. Pat. Office 63, 103 (October 21, 1997). In the event that such an inquiry has not been made, petitioner must make such an inquiry. If such inquiry results in the discovery that it is not correct that the entire delay in filing the required reply from the due date for the reply until the filing of a grantable petition pursuant to 37 CFR 1.137(b) was unintentional, petitioner must notify the Office.

Telephone inquiries concerning this decision should be directed to Kimberly Inabinet at (571) 272-4618.

This application is being referred to Technology Center AU 2887 for appropriate action by the Examiner in the normal course of business on the reply received August 12, 2011.

/Kimberly Inabinet/

Kimberly Inabinet
Petitions Examiner
Office of Petitions

UNITED STATES PATENT AND TRADEMARK OFFICE

Commissioner for Patents
United States Patent and Trademark Office
P.O. Box 1450
Alexandria, VA 22313-1450
www.uspto.gov

Lin & Associates
Intellectual Property, Inc.
PO Box 2339
Saratoga CA 95070-0339

MAILED
JAN 19 2012
OFFICE OF PETITIONS

In re Application of :
Wang et al. :
Application No. 12/546,689 : ON PETITION
Filed: August 25, 2009 :
Attorney Docket No. 09219URS :
For: STRUCTURE FOR OPTICAL PICKUP HEAD

This is a decision on the petition, filed December 19, 2011, under 37 CFR 1.137(b) to revive the above-identified application.

The petition is **GRANTED**.

The above-identified application became abandoned for failure to timely submit a reply within three (3) months of the mailing of the January 3, 2011 non-final Office action. No response being received and no extensions of time being obtained under the provisions of 37 CFR 1.136(a), this application became abandoned on April 4, 2011. A Notice of Abandonment was mailed on August 24, 2011.

Applicants have submitted an amendment in reply to the January 3, 2011 non-final Office action, an acceptable statement of the unintentional nature of the delay in responding to the January 3, 2011 non-final Office action, and the $930.00 petition fee.

All of the requirements under 37 CFR 1.137(b) being met, the petition is granted.

After the mailing of this decision, the application will be returned to Technology Center AU 2627 for consideration of the amendment filed on December 19, 2011.

Telephone inquiries should be directed to the undersigned at (571) 272-3230.

Shirene Willis Brantley
Senior Petitions Attorney
Office of Petitions

UNITED STATES PATENT AND TRADEMARK OFFICE

Commissioner for Patents
United States Patent and Trademark Office
P.O. Box 1450
Alexandria, VA 22313-1450
www.uspto.gov

Patent No. : **7912704**
Ser. No. **12/546782**
Inventor(s) : **BABU, GEORGE V.**
Issued : **03/22/2011**
Title : **HANDHELD ELECTRONIC DEVICE WITH REDUCED KEYBOARD AND ASSOCIATED METHOD OF PROVIDING QUICK TEXT ENTRY IN A MESSAGE**
Docket No. : **11298.0051-01000**

Re: Request for Certificate of Correction

Consideration has been given your request for the issuance of a certificate of correction for the above-identified patent under the provisions of Rule(s) 1.322 and/or 1.323.

Assignees' names and addresses (assignment data) printed in a patent, are based *solely* on information supplied in the appropriate space for identifying the assignment data, i.e., item 3 of the Issue Fee Transmittal Form PTOL-85B. Granting of a request under 37 CFR 3.81(b) is required to correct applicant's error providing ***incorrect or erroneous*** assignment data, *before* issuance of a Certificate of Correction, under 37 CFR 1.323 *(see Manual of Patent Examining Procedures (M.P.E.P) Chp.1400, sect. 1481).* This procedure is required *at any time after the issue fee is paid*, including after issuance of the patent.

In view of the foregoing, your request, in this matter, is hereby denied.

A request to correct the Assignee under 37 CFR 3.81(b) should include:

A. **the processing fee set forth in 37 CFR 1. 17(i) (currently $130);**
B. a statement that the failure to include the correct assignee name on the PTOL-85B was inadvertent; and
C. a copy of the Notice of Recordation of Assignment Document, reflecting the reel and frame number where the assignment(s) is recorded and/or reflecting proof of *the date* the assignment was submitted for recordation.

In the Request, Applicant(s) may request that the file be forwarded to Certificates of Correction Branch, for issuance of a Certificate of Correction, if the Request is granted.

Any request under 37 CFR 3.81(b) should be directed to the following address or facsimile number:

By mail: Mail Stop PETITIONS
Commissioner for Patents
Post Office Box 1450
Alexandria, VA 22313-1450

By hand: Customer Service Window
Mail Stop Petitions
Randolph Building
401 Dulany Street
Alexandria, VA 22314

By fax: (703) 872-9306
ATTN: Office of Petitions

If a fee (currently $100) was previously submitted for consideration of a Request for Certificate of Correction, under CFR 1.323, to correct assignment data, no additional fee is required.

A Certificate of Correction will be issued for the remaining errors.

Omega Lewis
For Mary Diggs
Decisions & Certificates
of Correction Branch
(703)756-1575 or (703) 756-1814

FINNEGAN, HENDERSON, FARABOW, GARRETT & DUNNER, L. L.P.
901 New York Avenue NW
Washington DC 20001

OL

SPE RESPONSE FOR CERTIFICATE OF CORRECTION

DATE : 10-27-11

TO SPE OF : ART UNIT 2857

SUBJECT : Request for Certificate of Correction for Appl. No.: 12/546825 Patent No.: 7996180

CofC mailroom date: 09-14-11

Please respond to this request for a certificate of correction within 7 days.

FOR IFW FILES:

Please review the requested changes/corrections as shown in the **COCIN** document(s) in the IFW application image. No new matter should be introduced, nor should the scope or meaning of the claims be changed.

Please complete the response (see below) and forward the completed response to scanning using document code **COCX**.

FOR PAPER FILES:

Please review the requested changes/corrections as shown in the attached certificate of correction. Please complete this form (see below) and forward it with the file to:

Certificates of Correction Branch (CofC)
Randolph Square – 9D10-A
Palm Location 7580

Note: _____

Angela Green 571.272.9805
CofC Branch 703-756-1814

Thank You For Your Assistance

The request for issuing the above-identified correction(s) is hereby:

Note your decision on the appropriate box.

- ☒ **Approved** — All changes apply.
- ☐ **Approved in Part** — Specify below which changes **do not** apply.
- ☐ **Denied** — State the reasons for denial below.

Comments: OK to enter all corrections

Edward Raymond

/Eliseo Ramos-Feliciano/ 11/15/11
Supervisory Patent Examiner
SPE

Art Unit 2857

UNITED STATES PATENT AND TRADEMARK OFFICE

UNITED STATES DEPARTMENT OF COMMERCE
United States Patent and Trademark Office
Address: COMMISSIONER FOR PATENTS
P.O. Box 1450
Alexandria, Virginia 22313-1450
www.uspto.gov

APPLICATION NO.	FILING DATE	FIRST NAMED INVENTOR	ATTORNEY DOCKET NO.	CONFIRMATION NO.
12/546,865	08/25/2009	William H. Eby	1421-396	4190

32905 7590 05/19/2011
JONDLE & ASSOCIATES, P.C.
858 HAPPY CANYON ROAD, SUITE 230
CASTLE ROCK, CO 80108

EXAMINER
MCELWAIN, ELIZABETH F

ART UNIT	PAPER NUMBER
1638	

NOTIFICATION DATE	DELIVERY MODE
05/19/2011	ELECTRONIC

Please find below and/or attached an Office communication concerning this application or proceeding.

The time period for reply, if any, is set in the attached communication.

Notice of the Office communication was sent electronically on above-indicated "Notification Date" to the following e-mail address(es):

JondleOA@jondlelaw.com

UNITED STATES PATENT AND TRADEMARK OFFICE

Commissioner for Patents
United States Patent and Trademark Office
P.O. Box 1450
Alexandria, VA 22313-1450
www.uspto.gov

MAY 19 2011

JONDLE & ASSOCIATES P.C.
858 HAPPY CANYON ROAD SUITE 230
CASTLE ROCK CO 80108

In re Application of:	:
William H. Eby	:
Serial No.: 12/546,865	: PETITION DECISION
Filed: August 25, 2009	:
Attorney Docket No.: **1421-396**	

This is in response to the petition under 37 CFR § 1.59(b), filed May 3, 2011, to expunge information from the above identified application. This application has not been allowed.

Petitioner requests that the Reply to Request for Information under 37 CFR 1.105, and attachment thereto, submitted to the Patent Office on May 3, 2011, be expunged from the record. Petitioner states either: (A) that the information contains trade secret material, proprietary material and/or material that is subject to a protective order which has not been made public; or (B) that the information submitted was unintentionally submitted and the failure to obtain its return would cause irreparable harm to the party who submitted the information or to the party in interest on whose behalf the information was submitted, and the information has not otherwise been made public. The petition fee set forth in 37 CFR § 1.17(g) has been paid.

This is an examined application which is currently under non-final rejection. As such the information provided has been reviewed, in part, but proceedings in the application have not been terminated. As stated in M.P.E.P. 724, upon allowance or other action closing prosecution in an application, petition may be made for return of Proprietary information. The information cannot be expunged at this time.

The petition is **DISMISSED**. Petitioner may resubmit the petition subsequent to a Notice of Allowability or *ex parte Quayle* action being mailed in the application. No additional petition fee will be required at that time.

Should there be any questions about this decision please contact Marianne C. Seidel by letter addressed to Director, TC 1600, at the address listed above, or by telephone at 571-272-0584 or by facsimile sent to the general Office facsimile number, 571-273-8300.

/MC Seidel/
Marianne C. Seidel, Quality Assurance Specialist
Technology Center 1600

UNITED STATES PATENT AND TRADEMARK OFFICE

UNITED STATES DEPARTMENT OF COMMERCE
United States Patent and Trademark Office
Address: COMMISSIONER FOR PATENTS
P.O. Box 1450
Alexandria, Virginia 22313-1450
www.uspto.gov

APPLICATION NO.	FILING DATE	FIRST NAMED INVENTOR	ATTORNEY DOCKET NO.	CONFIRMATION NO.
12/546,865	08/25/2009	William H. Eby	1421-396	4190

32905 7590 11/09/2011
JONDLE & ASSOCIATES, P.C.
858 HAPPY CANYON ROAD, SUITE 230
CASTLE ROCK, CO 80108

EXAMINER
MCELWAIN, ELIZABETH F

ART UNIT	PAPER NUMBER
1638	

NOTIFICATION DATE	DELIVERY MODE
11/09/2011	ELECTRONIC

Please find below and/or attached an Office communication concerning this application or proceeding.

The time period for reply, if any, is set in the attached communication.

Notice of the Office communication was sent electronically on above-indicated "Notification Date" to the following e-mail address(es):

JondleOA@jondlelaw.com

UNITED STATES PATENT AND TRADEMARK OFFICE

Commissioner for Patents
United States Patent and Trademark Office
P.O. Box 1450
Alexandria, VA 22313-1450
www.uspto.gov

NOV 0 9 2011

JONDLE & ASSOCIATES P.C.
858 HAPPY CANYON ROAD SUITE 230
CASTLE ROCK CO 80108

In re Application of:	:
William H. Eby	: PETITION DECISION
Serial No.: 12/546,865	:
Filed: August 25, 2009	:
Attorney Docket No.: **1421-396**	

This is in response to the renewed petition under 37 CFR § 1.59(b), filed October 28, 2011, to expunge information from the above identified application. This application has been allowed.

Petitioner requests that the material submitted to the Patent Office on May 3, 2011 be expunged from the record. Petitioner states either: (A) that the information contains trade secret material, proprietary material and/or material that is subject to a protective order which has not been made public; or (B) that the information submitted was unintentionally submitted and the failure to obtain its return would cause irreparable harm to the party who submitted the information or to the party in interest on whose behalf the information was submitted, and the information has not otherwise been made public. The petition fee set forth in 37 CFR § 1.17(g) has been paid.

The reasons set forth in this petition establishes to the satisfaction of the Director that expungement of the information is appropriate. The file entry for this document has been closed and as such the document is no longer publicly available, which is the IFW equivalent to removal of a paper document from a paper file wrapper.

Therefore, petitioner's petition is GRANTED.

Should there be any questions about this decision please contact Marianne C. Seidel by letter addressed to Director, TC 1600, at the address listed above, or by telephone at 571-272-0584 or by facsimile sent to the general Office facsimile number, 571-273-8300.

/MC Seidel/
Marianne C. Seidel, Quality Assurance Specialist
Technology Center 1600

UNITED STATES PATENT AND TRADEMARK OFFICE

UNITED STATES DEPARTMENT OF COMMERCE
United States Patent and Trademark Office
Address: COMMISSIONER FOR PATENTS
P.O. Box 1450
Alexandria, Virginia 22313-1450
www.uspto.gov

APPLICATION NO.	FILING DATE	FIRST NAMED INVENTOR	ATTORNEY DOCKET NO.	CONFIRMATION NO.
12/546,877	08/25/2009	William H. Eby	1421-397	4208

32905 7590 06/03/2011
JONDLE & ASSOCIATES, P.C.
858 HAPPY CANYON ROAD, SUITE 230
CASTLE ROCK, CO 80108

EXAMINER
MCELWAIN, ELIZABETH F

ART UNIT	PAPER NUMBER
1638	

NOTIFICATION DATE	DELIVERY MODE
06/03/2011	ELECTRONIC

Please find below and/or attached an Office communication concerning this application or proceeding.

The time period for reply, if any, is set in the attached communication.

Notice of the Office communication was sent electronically on above-indicated "Notification Date" to the following e-mail address(es):

JondleOA@jondlelaw.com

UNITED STATES PATENT AND TRADEMARK OFFICE

Commissioner for Patents
United States Patent and Trademark Office
P.O. Box 1450
Alexandria, VA 22313-1450
www.uspto.gov

JUN 0 3 2011

JONDLE & ASSOCIATES P.C.
858 HAPPY CANYON ROAD SUITE 230
CASTLE ROCK CO 80108

In re Application of: William H. Eby Serial No.: 12/546,877 Filed: August 25, 2009 Attorney Docket No.: **1421-397**	: : : PETITION DECISION :

This is in response to the petition under 37 CFR § 1.59(b), filed May 20, 2011, to expunge information from the above identified application. This application has not been allowed.

Petitioner requests that the Reply to Request for Information under 37 CFR 1.105, and attachment thereto, submitted to the Patent Office on May 20, 2011, be expunged from the record. Petitioner states either: (A) that the information contains trade secret material, proprietary material and/or material that is subject to a protective order which has not been made public; or (B) that the information submitted was unintentionally submitted and the failure to obtain its return would cause irreparable harm to the party who submitted the information or to the party in interest on whose behalf the information was submitted, and the information has not otherwise been made public. The petition fee set forth in 37 CFR § 1.17(g) has been paid.

This is an examined application which is currently under non-final rejection. As such the information provided has been reviewed, in part, but proceedings in the application have not been terminated. As stated in M.P.E.P. 724, upon allowance or other action closing prosecution in an application, petition may be made for return of Proprietary information. The information cannot be expunged at this time.

The petition is **DISMISSED**. Petitioner may resubmit the petition subsequent to a Notice of Allowability or *ex parte Quayle* action being mailed in the application. No additional petition fee will be required at that time.

Should there be any questions about this decision please contact Marianne C. Seidel by letter addressed to Director, TC 1600, at the address listed above, or by telephone at 571-272-0584 or by facsimile sent to the general Office facsimile number, 571-273-8300.

/MC Seidel/
Marianne C. Seidel, Quality Assurance Specialist
Technology Center 1600

UNITED STATES PATENT AND TRADEMARK OFFICE

UNITED STATES DEPARTMENT OF COMMERCE
United States Patent and Trademark Office
Address: COMMISSIONER FOR PATENTS
P.O. Box 1450
Alexandria, Virginia 22313-1450
www.uspto.gov

APPLICATION NO.	FILING DATE	FIRST NAMED INVENTOR	ATTORNEY DOCKET NO.	CONFIRMATION NO.
12/546,877	08/25/2009	William H. Eby	1421-397	4208

32905 7590 10/13/2011
JONDLE & ASSOCIATES, P.C.
858 HAPPY CANYON ROAD, SUITE 230
CASTLE ROCK, CO 80108

EXAMINER
MCELWAIN, ELIZABETH F

ART UNIT	PAPER NUMBER
1638	

NOTIFICATION DATE	DELIVERY MODE
10/13/2011	ELECTRONIC

Please find below and/or attached an Office communication concerning this application or proceeding.

The time period for reply, if any, is set in the attached communication.

Notice of the Office communication was sent electronically on above-indicated "Notification Date" to the following e-mail address(es):

JondleOA@jondlelaw.com

UNITED STATES PATENT AND TRADEMARK OFFICE

Commissioner for Patents
United States Patent and Trademark Office
P.O. Box 1450
Alexandria, VA 22313-1450
www.uspto.gov

OCT 13 2011

JONDLE & ASSOCIATES P.C.
858 HAPPY CANYON ROAD SUITE 230
CASTLE ROCK CO 80108

In re Application of:	
William H. Eby	PETITION DECISION
Serial No.: 12/546,877	
Filed: August 25, 2009	
Attorney Docket No.: **1421-397**	

This is in response to the renewed petition under 37 CFR § 1.59(b), filed October 6, 2011, to expunge information from the above identified application. This application has been allowed.

Petitioner requests that the material submitted to the Patent Office on May 20, 2011 be expunged from the record. Petitioner states either: (A) that the information contains trade secret material, proprietary material and/or material that is subject to a protective order which has not been made public; or (B) that the information submitted was unintentionally submitted and the failure to obtain its return would cause irreparable harm to the party who submitted the information or to the party in interest on whose behalf the information was submitted, and the information has not otherwise been made public. The petition fee set forth in 37 CFR § 1.17(g) has been paid.

The reasons set forth in this petition establishes to the satisfaction of the Director that expungement of the information is appropriate. The file entry for this document has been closed and as such the document is no longer publicly available, which is the IFW equivalent to removal of a paper document from a paper file wrapper.

Therefore, petitioner's petition is GRANTED.

Should there be any questions about this decision please contact Marianne C. Seidel by letter addressed to Director, TC 1600, at the address listed above, or by telephone at 571-272-0584 or by facsimile sent to the general Office facsimile number, 571-273-8300.

/MC Seidel/
Marianne C. Seidel, Quality Assurance Specialist
Technology Center 1600

Doc code : PET.OP.AGE
Description : Petition to make special based on Age/Health

PTO/SB/130 (07-09)
Approved for use through 07/31/2012. OMB 0651- 0031
U.S. Patent and Trademark Office; U.S. DEPARTMENT OF COMMERCE
Under the Paperwork Reduction Act of 1995, no persons are required to respond to a collection of information unless it contains a valid OMB control number

PETITION TO MAKE SPECIAL BASED ON AGE FOR ADVANCEMENT OF EXAMINATION UNDER 37 CFR 1.102(c)(1)

Application Information

Application Number	12/546,897	Confirmation Number	4237	Filing Date	2009-08-25
Attorney Docket Number (optional)	1421-398	Art Unit	1638	Examiner	David Kruse
First Named Inventor	WILLIAM H. EBY				
Title of Invention	SOYBEAN CULTIVAR 88234045				

Attention: Office of Petitions
An application may be made special for advancement of examination upon filing of a petition showing that the applicant is 65 years of age, or more. No fee is required with such a petition. See 37 CFR 1.102(c)(1) and MPEP 708.02 (IV).

APPLICANT HEREBY PETITIONS TO MAKE SPECIAL FOR ADVANCEMENT OF EXAMINATION IN THIS APPLICATION UNDER 37 CFR 1.102(c)(1) and MPEP 708.02 (IV) ON THE BASIS OF THE APPLICANT'S AGE.

A grantable petition requires one of the following items:
(1) Statement by one named inventor in the application that he/she is 65 years of age, or more; or
(2) Certification by a registered attorney/agent having evidence such as a birth certificate, passport, driver's license, etc. showing one named inventor in the application is 65 years of age, or more.

Name of Inventor who is 65 years of age, or older

Given Name	Middle Name	Family Name	Suffix
William	H.	EBY	

A signature of the applicant or representative is required in accordance with 37 CFR 1.33 and 10.18.
Please see 37 CFR 1.4(d) for the format of the signature.

Select (1) or (2) :

○ (1) I am an inventor in this application and I am 65 years of age, or more.

◉ (2) I am an attorney or agent registered to practice before the Patent and Trademark Office, and I certify that I am in possession of evidence, and will retain such in the application file record, showing that the inventor listed above is 65 years of age, or more.

Signature	/Robert J. Jondle/	Date (YYYY-MM-DD)	2011-05-09
Name	Robert J. Jondle	Registration Number	33915

PTO/SB/130 (07-09)
Approved for use through 07/31/2012. OMB 0651- 0031
U.S. Patent and Trademark Office; U.S. DEPARTMENT OF COMMERCE
Under the Paperwork Reduction Act of 1995, no persons are required to respond to a collection of information unless it contains a valid OMB control number

Privacy Act Statement

The Privacy Act of 1974 (P.L. 93-579) requires that you be given certain information in connection with your submission of the attached form related to a patent application or patent. Accordingly, pursuant to the requirements of the Act, please be advised that: (1) the general authority for the collection of this information is 35 U.S.C. 2(b)(2); (2) furnishing of the information solicited is voluntary; and (3) the principal purpose for which the information is used by the U.S. Patent and Trademark Office is to process and/or examine your submission related to a patent application or patent. If you do not furnish the requested information, the U.S. Patent and Trademark Office may not be able to process and/or examine your submission, which may result in termination of proceedings or abandonment of the application or expiration of the patent.

The information provided by you in this form will be subject to the following routine uses:

1. The information on this form will be treated confidentially to the extent allowed under the Freedom of Information Act (5 U.S.C. 552) and the Privacy Act (5 U.S.C. 552a). Records from this system of records may be disclosed to the Department of Justice to determine whether the Fr eedom of Information Act requires disclosure of these records.

2. A record from this system of records may be disclosed, as a routine use, in the course of presenting evidence to a court, magistrate, or administrative tribunal, including disclosures to opposing counsel in the course of settlement negotiations.

3. A record in this system of records may be disclosed, as a routine use, to a Member of Congress submitting a request involving an individual, to whom the record pertains, when the individual has requested assistance from the Member with respect to the subject matter of the record.

4. A record in this system of records may be disclosed, as a routine use, to a contractor of the Agency having need for the information in order to perform a contract. Recipients of information shall be required to comply with the requirements of the Privacy Act of 1974, as amended, pursuant to 5 U.S.C. 552a(m).

5. A record related to an International Application filed under the Patent Cooperation Treaty in this system of records may be disclosed, as a routine use, to the International Bureau of the World Intellectual Property Organization, pursuant to the Patent Cooperation Treaty.

6. A record in this system of records may be disclosed, as a routine use, to another federal agency for purposes of National Security review (35 U.S.C. 181) and for review pursuant to the Atomic Energy Act (42 U.S.C. 218(c)).

7. A record from this system of records may be disclosed, as a routine use, to the Administrator, General Services, or his/her designee, during an inspection of records conducted by GSA as part of that agency's responsibility to recommend improvements in records management practices and programs, under authority of 44 U.S.C. 2904 and 2906. Such disclosure shall be made in accordance with the GSA regulations governing inspection of records for this purpose, and any other relevant (i.e., GSA or Commerce) directive. Such disclosure shall not be used to make determinations about indivi duals.

8. A record from this system of records may be disclosed, as a routine use, to the public after either publication of the application pursuant to 35 U.S.C. 122(b) or issuance of a patent pursuant to 35 U.S.C. 151. Further, a record may be disclosed, subject to the limitations of 37 CFR 1.14, as a routine use, to the public if the record was filed in an application which became abandoned or in which the proceedings were terminated and which application is referenced by either a published application, an application open to public inspections or an issued patent.

9. A record from this system of records may be disclosed, as a routine use, to a Federal, State, or local law enforcement agency, if the USPTO becomes aware of a violation or potential violation of law or regulation.

UNITED STATES PATENT AND TRADEMARK OFFICE

Commissioner for Patents
United States Patent and Trademark Office
P.O. Box 1450
Alexandria, VA 22313-1450
www.uspto.gov

In re Application of
William H. Eby

Application No. 12546897

Filed: August 25,2009

Attorney Docket No. 1421-398

:DECISION ON PETITION TO MAKE SPECIAL
:UNDER 37 CFR 1.102(c)(1)

This is a decision on the electronic petition under 37 CFR 1.102 (c)(1), filed 09-MAY-2011 to make the above-identified application special based on applicant's age as set forth in MPEP § 708.02, Section IV.

The petition is **GRANTED**.

A grantable petition to make an application special under 37 CFR 1.102(c)(1), MPEP § 708.02, Section IV: Applicant's Age must include a statement by applicant or a registered practitioner having evidence that applicant is at least 65 years of age. No fee is required.

Accordingly, the above-identified application has been accorded "special" status and will be taken up for action by the examiner upon the completion of all pre-examination processing.

Telephone inquiries concerning this electronic decision should be directed to the Electronic Business Center at 866-217-9197.

All other inquiries concerning either the examination or status of the application should be directed to the Technology Center.

UNITED STATES PATENT AND TRADEMARK OFFICE

UNITED STATES DEPARTMENT OF COMMERCE
United States Patent and Trademark Office
Address: COMMISSIONER FOR PATENTS
P.O. Box 1450
Alexandria, Virginia 22313-1450
www.uspto.gov

APPLICATION NO.	FILING DATE	FIRST NAMED INVENTOR	ATTORNEY DOCKET NO.	CONFIRMATION NO.
12/546,897	08/25/2009	William H. Eby	1421-398	4237

32905 7590 06/20/2011
JONDLE & ASSOCIATES, P.C.
858 HAPPY CANYON ROAD, SUITE 230
CASTLE ROCK, CO 80108

EXAMINER
KRUSE, DAVID H

ART UNIT	PAPER NUMBER
1638	

NOTIFICATION DATE	DELIVERY MODE
06/20/2011	ELECTRONIC

Please find below and/or attached an Office communication concerning this application or proceeding.

The time period for reply, if any, is set in the attached communication.

Notice of the Office communication was sent electronically on above-indicated "Notification Date" to the following e-mail address(es):

JondleOA@jondlelaw.com

UNITED STATES PATENT AND TRADEMARK OFFICE

Commissioner for Patents
United States Patent and Trademark Office
P.O. Box 1450
Alexandria, VA 22313-1450
www.uspto.gov

JUN 2 0 2011

JONDLE & ASSOCIATES P.C.
858 HAPPY CANYON ROAD SUITE 230
CASTLE ROCK CO 80108

In re Application of:	:
William H. Eby	:
Serial No.: 12/546,897	: PETITION DECISION
Filed: August 25, 2009	:
Attorney Docket No.: **1421-398**	

This is in response to the petition under 37 CFR § 1.59(b), filed June 9, 2011, to expunge information from the above identified application. This application has not been allowed.

Petitioner requests that the Reply to Request for Information under 37 CFR 1.105, and attachment thereto, submitted to the Patent Office on June 9, 2011, be expunged from the record. Petitioner states either: (A) that the information contains trade secret material, proprietary material and/or material that is subject to a protective order which has not been made public; or (B) that the information submitted was unintentionally submitted and the failure to obtain its return would cause irreparable harm to the party who submitted the information or to the party in interest on whose behalf the information was submitted, and the information has not otherwise been made public. The petition fee set forth in 37 CFR § 1.17(g) has been paid.

This is an examined application which is currently under non-final rejection. As such the information provided has been reviewed, in part, but proceedings in the application have not been terminated. As stated in M.P.E.P. 724, upon allowance or other action closing prosecution in an application, petition may be made for return of Proprietary information. The information cannot be expunged at this time.

The petition is **DISMISSED**. Petitioner may resubmit the petition subsequent to a Notice of Allowability or *ex parte Quayle* action being mailed in the application. No additional petition fee will be required at that time.

Should there be any questions about this decision please contact Marianne C. Seidel by letter addressed to Director, TC 1600, at the address listed above, or by telephone at 571-272-0584 or by facsimile sent to the general Office facsimile number, 571-273-8300.

/MC Seidel/
Marianne C. Seidel, Quality Assurance Specialist
Technology Center 1600

UNITED STATES PATENT AND TRADEMARK OFFICE

UNITED STATES DEPARTMENT OF COMMERCE
United States Patent and Trademark Office
Address: COMMISSIONER FOR PATENTS
P.O. Box 1450
Alexandria, Virginia 22313-1450
www.uspto.gov

APPLICATION NO.	FILING DATE	FIRST NAMED INVENTOR	ATTORNEY DOCKET NO.	CONFIRMATION NO.
12/546,897	08/25/2009	William H. Eby	1421-398	4237

32905 7590 09/16/2011
JONDLE & ASSOCIATES, P.C.
858 HAPPY CANYON ROAD, SUITE 230
CASTLE ROCK, CO 80108

EXAMINER
KRUSE, DAVID H

ART UNIT	PAPER NUMBER
1638	

NOTIFICATION DATE	DELIVERY MODE
09/16/2011	ELECTRONIC

Please find below and/or attached an Office communication concerning this application or proceeding.

The time period for reply, if any, is set in the attached communication.

Notice of the Office communication was sent electronically on above-indicated "Notification Date" to the following e-mail address(es):

JondleOA@jondlelaw.com

UNITED STATES PATENT AND TRADEMARK OFFICE

SEP 1 6 2011

Commissioner for Patents
United States Patent and Trademark Office
P.O. Box 1450
Alexandria, VA 22313-1450
www.uspto.gov

JONDLE & ASSOCIATES P.C.
858 HAPPY CANYON ROAD SUITE 230
CASTLE ROCK CO 80108

In re Application of:	:
William H. Eby	: PETITION DECISION
Serial No.: 12/546,897	:
Filed: August 13, 2009	:
Attorney Docket No.: **1421-398**	

This is in response to the renewed petition under 37 CFR § 1.59(b), filed September 14, 2011, to expunge information from the above identified application. This application has been allowed.

Petitioner requests that the material submitted to the Patent Office on June 9, 2011 be expunged from the record. Petitioner states either: (A) that the information contains trade secret material, proprietary material and/or material that is subject to a protective order which has not been made public; or (B) that the information submitted was unintentionally submitted and the failure to obtain its return would cause irreparable harm to the party who submitted the information or to the party in interest on whose behalf the information was submitted, and the information has not otherwise been made public. The petition fee set forth in 37 CFR § 1.17(g) has been paid.

The reasons set forth in this petition establishes to the satisfaction of the Director that expungement of the information is appropriate. The file entry for this document has been closed and as such the document is no longer publicly available, which is the IFW equivalent to removal of a paper document from a paper file wrapper.

Therefore, petitioner's petition is GRANTED.

Should there be any questions about this decision please contact Marianne C. Seidel by letter addressed to Director, TC 1600, at the address listed above, or by telephone at 571-272-0584 or by facsimile sent to the general Office facsimile number, 571-273-8300.

/MC Seidel/
Marianne C. Seidel, Quality Assurance Specialist
Technology Center 1600

UNITED STATES PATENT AND TRADEMARK OFFICE

Commissioner for Patents
United States Patent and Trademark Office
P.O. Box 1450
Alexandria, VA 22313-1450
www.uspto.gov

TYCO HEALTHCARE GROUP LP
D/B/A COVIDIEN
555 LONG WHARF DRIVE
MAIL STOP 8-N1, LEGAL DEPARTMENT
NEW HAVEN, CT 06511

MAILED

OCT 20 2011

OFFICE OF PETITIONS

In re Application of	:	
Keith L. Milliman	:	
Application No.: 12/546,899	:	ON PETITION
Filed: August 25, 2009	:	
Attorney Docket No.: H-US-01055 (203-5954)	:	

This is a decision on the petition, filed October 19, 2011, under 37 CFR 1.313(c)(2) to withdraw the above-identified application from issue after payment of the issue fee.

The petition is **GRANTED**.

The above-identified application is withdrawn from issue for consideration of a submission under 37 CFR 1.114 (request for continued examination). See 37 CFR 1.313(c)(2).

Petitioner is advised that the issue fee paid on October 25, 2011, cannot be refunded. If, however, this application is again allowed, petitioner may request that it be applied towards the issue fee required by the new Notice of Allowance.[1]

Telephone inquiries relating to this decision should be directed to the undersigned at (571) 272-3204.

The application is being referred to Technology Center AU 3721 for further processing of the request for continued examination under 37 CFR 1.114 and for consideration of the concurrently filed Information Disclosure Statement (IDS).

/SDB/

Sherry D. Brinkley
Petitions Examiner
Office of Petitions

[1] *The request to apply the issue fee to the new Notice may be satisfied by completing and returning the new Part B – Fee(s) Transmittal Form (along with any balance due at the time of submission). Petitioner is advised that the Issue Fee Transmittal Form* ***must*** *be completed and timely submitted to avoid abandonment of the application.*

UNITED STATES PATENT AND TRADEMARK OFFICE

Commissioner for Patents
United States Patent and Trademark Office
P.O. Box 1450
Alexandria, VA 22313-1450
www.uspto.gov

In re Application of
William H. Eby

Application No. 12546904

Filed: August 25,2009

Attorney Docket No. 1421-399

:DECISION ON PETITION TO MAKE SPECIAL
:UNDER 37 CFR 1.102(c)(1)

This is a decision on the electronic petition under 37 CFR 1.102 (c)(1), filed 09-MAY-2011 to make the above-identified application special based on applicant's age as set forth in MPEP § 708.02, Section IV.

The petition is **GRANTED**.

A grantable petition to make an application special under 37 CFR 1.102(c)(1), MPEP § 708.02, Section IV: Applicant's Age must include a statement by applicant or a registered practitioner having evidence that applicant is at least 65 years of age. No fee is required.

Accordingly, the above-identified application has been accorded "special" status and will be taken up for action by the examiner upon the completion of all pre-examination processing.

Telephone inquiries concerning this electronic decision should be directed to the Electronic Business Center at 866-217-9197.

All other inquiries concerning either the examination or status of the application should be directed to the Technology Center.

Doc code : PET.OP.AGE
Description : Petition to make special based on Age/Health

PTO/SB/130 (07-09)
Approved for use through 07/31/2012. OMB 0651- 0031
U.S. Patent and Trademark Office; U.S. DEPARTMENT OF COMMERCE
Under the Paperwork Reduction Act of 1995, no persons are required to respond to a collection of information unless it contains a valid OMB control number

PETITION TO MAKE SPECIAL BASED ON AGE FOR ADVANCEMENT OF EXAMINATION UNDER 37 CFR 1.102(c)(1)

Application Information

Application Number	12/546,904	Confirmation Number	4254	Filing Date	2009-08-25
Attorney Docket Number (optional)	1421-399	Art Unit	1661	Examiner	Anne Marie Grunberg
First Named Inventor	WILLIAM H. EBY				
Title of Invention	SOYBEAN CULTIVAR 80213755				

Attention: Office of Petitions
An application may be made special for advancement of examination upon filing of a petition showing that the applicant is 65 years of age, or more. No fee is required with such a petition. See 37 CFR 1.102(c)(1) and MPEP 708.02 (IV).

APPLICANT HEREBY PETITIONS TO MAKE SPECIAL FOR ADVANCEMENT OF EXAMINATION IN THIS APPLICATION UNDER 37 CFR 1.102(c)(1) and MPEP 708.02 (IV) ON THE BASIS OF THE APPLICANT'S AGE.

A grantable petition requires one of the following items:
(1) Statement by one named inventor in the application that he/she is 65 years of age, or more; or
(2) Certification by a registered attorney/agent having evidence such as a birth certificate, passport, driver's license, etc. showing one named inventor in the application is 65 years of age, or more.

Name of Inventor who is 65 years of age, or older

Given Name	Middle Name	Family Name	Suffix
William	H.	EBY	

A signature of the applicant or representative is required in accordance with 37 CFR 1.33 and 10.18.
Please see 37 CFR 1.4(d) for the format of the signature.

Select (1) or (2) :

○ (1) I am an inventor in this application and I am 65 years of age, or more.

◉ (2) I am an attorney or agent registered to practice before the Patent and Trademark Office, and I certify that I am in possession of evidence, and will retain such in the application file record, showing that the inventor listed above is 65 years of age, or more.

Signature	/Robert J. Jondle/	Date (YYYY-MM-DD)	2011-05-09
Name	Robert J. Jondle	Registration Number	33915

PTO/SB/130 (07-09)
Approved for use through 07/31/2012. OMB 0651- 0031
U.S. Patent and Trademark Office; U.S. DEPARTMENT OF COMMERCE
Under the Paperwork Reduction Act of 1995, no persons are required to respond to a collection of information unless it contains a valid OMB control number

Privacy Act Statement

The Privacy Act of 1974 (P.L. 93-579) requires that you be given certain information in connection with your submission of the attached form related to a patent application or patent. Accordingly, pursuant to the requirements of the Act, please be advised that: (1) the general authority for the collection of this information is 35 U.S.C. 2(b)(2); (2) furnishing of the information solicited is voluntary; and (3) the principal purpose for which the information is used by the U.S. Patent and Trademark Office is to process and/or examine your submission related to a patent application or patent. If you do not furnish the requested information, the U.S. Patent and Trademark Office may not be able to process and/or examine your submission, which may result in termination of proceedings or abandonment of the application or expiration of the patent.

The information provided by you in this form will be subject to the following routine uses:

1. The information on this form will be treated confidentially to the extent allowed under the Freedom of Information Act (5 U.S.C. 552) and the Privacy Act (5 U.S.C. 552a). Records from this system of records may be disclosed to the Department of Justice to determine whether the Fr eedom of Information Act requires disclosure of these records.

2. A record from this system of records may be disclosed, as a routine use, in the course of presenting evidence to a court, magistrate, or administrative tribunal, including disclosures to opposing counsel in the course of settlement negotiations.

3. A record in this system of records may be disclosed, as a routine use, to a Member of Congress submitting a request involving an individual, to whom the record pertains, when the individual has requested assistance from the Member with respect to the subject matter of the record.

4. A record in this system of records may be disclosed, as a routine use, to a contractor of the Agency having need for the information in order to perform a contract. Recipients of information shall be required to comply with the requirements of the Privacy Act of 1974, as amended, pursuant to 5 U.S.C. 552a(m).

5. A record related to an International Application filed under the Patent Cooperation Treaty in this system of records may be disclosed, as a routine use, to the International Bureau of the World Intellectual Property Organization, pursuant to the Patent Cooperation Treaty.

6. A record in this system of records may be disclosed, as a routine use, to another federal agency for purposes of National Security review (35 U.S.C. 181) and for review pursuant to the Atomic Energy Act (42 U.S.C. 218(c)).

7. A record from this system of records may be disclosed, as a routine use, to the Administrator, General Services, or his/her designee, during an inspection of records conducted by GSA as part of that agency's responsibility to recommend improvements in records management practices and programs, under authority of 44 U.S.C. 2904 and 2906. Such disclosure shall be made in accordance with the GSA regulations governing inspection of records for this purpose, and any other relevant (i.e., GSA or Commerce) directive. Such disclosure shall not be used to make determinations about indivi duals.

8. A record from this system of records may be disclosed, as a routine use, to the public after either publication of the application pursuant to 35 U.S.C. 122(b) or issuance of a patent pursuant to 35 U.S.C. 151. Further, a record may be disclosed, subject to the limitations of 37 CFR 1.14, as a routine use, to the public if the record was filed in an application which became abandoned or in which the proceedings were terminated and which application is referenced by either a published application, an application open to public inspections or an issued patent.

9. A record from this system of records may be disclosed, as a routine use, to a Federal, State, or local law enforcement agency, if the USPTO becomes aware of a violation or potential violation of law or regulation.

APPLICATION NO.	FILING DATE	FIRST NAMED INVENTOR	ATTORNEY DOCKET NO.	CONFIRMATION NO.
12/546,904	08/25/2009	William H. Eby	1421-399	4254

32905 7590 11/01/2011
JONDLE & ASSOCIATES, P.C.
858 HAPPY CANYON ROAD, SUITE 230
CASTLE ROCK, CO 80108

EXAMINER
MCELWAIN, ELIZABETH F

ART UNIT	PAPER NUMBER
1638	

NOTIFICATION DATE	DELIVERY MODE
11/01/2011	ELECTRONIC

Please find below and/or attached an Office communication concerning this application or proceeding.

The time period for reply, if any, is set in the attached communication.

Notice of the Office communication was sent electronically on above-indicated "Notification Date" to the following e-mail address(es):

JondleOA@jondlelaw.com

Commissioner for Patents
United States Patent and Trademark Office
P.O. Box 1450
Alexandria, VA 22313-1450
www.uspto.gov

NOV - 1 2011

JONDLE & ASSOCIATES P.C.
858 HAPPY CANYON ROAD SUITE 230
CASTLE ROCK CO 80108

In re Application of:	:
William H. Eby	:
Serial No.: 12/546,904	: PETITION DECISION
Filed: August 25, 2009	:
Attorney Docket No.: **1421-399**	

This is in response to the petition under 37 CFR § 1.59(b), filed August 8, 2011, to expunge information from the above identified application. This application has not been allowed.

Petitioner requests that the Reply to Request for Information under 37 CFR 1.105, and attachment thereto, submitted to the Patent Office on August 8, 2011, be expunged from the record. Petitioner states either: (A) that the information contains trade secret material, proprietary material and/or material that is subject to a protective order which has not been made public; or (B) that the information submitted was unintentionally submitted and the failure to obtain its return would cause irreparable harm to the party who submitted the information or to the party in interest on whose behalf the information was submitted, and the information has not otherwise been made public. The petition fee set forth in 37 CFR § 1.17(g) has been paid.

This is an examined application which is currently under non-final rejection. As such the information provided has been reviewed, in part, but proceedings in the application have not been terminated. As stated in M.P.E.P. 724, upon allowance or other action closing prosecution in an application, petition may be made for return of Proprietary information. The information cannot be expunged at this time.

The petition is **DISMISSED**. Petitioner may resubmit the petition subsequent to a Notice of Allowability or *ex parte Quayle* action being mailed in the application. No additional petition fee will be required at that time.

Should there be any questions about this decision please contact Marianne C. Seidel by letter addressed to Director, TC 1600, at the address listed above, or by telephone at 571-272-0584 or by facsimile sent to the general Office facsimile number, 571-273-8300.

/MC Seidel/
Marianne C. Seidel, Quality Assurance Specialist
Technology Center 1600

UNITED STATES PATENT AND TRADEMARK OFFICE

Commissioner for Patents
United States Patent and Trademark Office
P.O. Box 1450
Alexandria, VA 22313-1450
www.uspto.gov

Decision Date : February 21, 2012

In re Application of :

William Eby

Application No : 12546904

Filed : 25-Aug-2009

Attorney Docket No : 1421-399

DECISION ON REQUEST TO WITHDRAW AS ATTORNEY/AGENTOF RECORD

This is an electronic decision on the Request to Withdraw as attorney or agent of record under 37 CFR§ 1.36(b), filed February 21, 2012

The request is **APPROVED**

The request was signed by Robert J. Jondle (registration no. 33915) on behalf of all attorneys/agents associated with Customer Number 32905 . All attorneys/agents associated with Customer Number 32905 have been withdrawn.

Since there are no remaining attorneys of record, all future communications from the Office will be directed to the first named inventor or assignee that has properly made itself of record pursuant to 37 CFR 3.71, with Customer number 26263 .

As a reminder, requester is required to inform the first named inventor or assignee that has properly made itself of record pursuant to 37 CFR 3.71 of the electronically processed petition.

Telephone inquiries concerning this decision should be directed to the Patent Electronic Business Center (EBC) at 866-217-9197.

Office of Petitions

Doc Code: PET.AUTO **Document Description: Petition automatically granted by EFS-Web**	PTO/SB/83 U.S. Patent and Trademark Office Department of Commerce

Electronic Petition Request	**REQUEST FOR WITHDRAWAL AS ATTORNEY OR AGENT AND CHANGE OF CORRESPONDENCE ADDRESS**
Application Number	12546904
Filing Date	25-Aug-2009
First Named Inventor	William Eby
Art Unit	1638
Examiner Name	ELIZABETH MCELWAIN
Attorney Docket Number	1421-399
Title	SOYBEAN CULTIVAR 80213755

◉ Please withdraw me as attorney or agent for the above identified patent application and the practitioners of record associated with Customer Number: 32905

The reason(s) for this request are those described in 37 CFR:

10.40(b)(4)

Certifications

☒ I/We have given reasonable notice to the client, prior to the expiration of the response period, that the practitioner(s) intend to withdraw from employment

☒ I/We have delivered to the client or a duly authorized representative of the client all papers and property (including funds) to which the client is entitled

☒ I/We have notified the client of any responses that may be due and the time frame within which the client must respond

Change the correspondence address and direct all future correspondence to:
The address of the first named inventor or assignee that has properly made itself of record pursuant to 37 CFR 3.71, associated with Customer Number: 26263

I am authorized to sign on behalf of myself and all withdrawing practitioners.

Signature	/Robert J. Jondle/
Name	Robert J. Jondle
Registration Number	33915

UNITED STATES PATENT AND TRADEMARK OFFICE

UNITED STATES DEPARTMENT OF COMMERCE
United States Patent and Trademark Office
Address: COMMISSIONER FOR PATENTS
P.O. Box 1450
Alexandria, Virginia 22313-1450
www.uspto.gov

APPLICATION NO.	FILING DATE	FIRST NAMED INVENTOR	ATTORNEY DOCKET NO.	CONFIRMATION NO.
12/546,904	08/25/2009	William H. Eby	1421-399	4254

26263 7590 02/24/2012
SNR DENTON US LLP
P.O. BOX 061080
CHICAGO, IL 60606-1080

EXAMINER
MCELWAIN, ELIZABETH F

ART UNIT	PAPER NUMBER
1638	

MAIL DATE	DELIVERY MODE
02/24/2012	PAPER

Please find below and/or attached an Office communication concerning this application or proceeding.

The time period for reply, if any, is set in the attached communication.

UNITED STATES PATENT AND TRADEMARK OFFICE

Commissioner for Patents
United States Patent and Trademark Office
P.O. Box 1450
Alexandria, VA 22313-1450
www.uspto.gov

SNR DENTON US LLP
P.O. BOX 061080
CHICAGO, IL 60606-1080

In re Application of:
William H. Eby
Serial No.: 12/546,904
Filed: August 25, 2009
Attorney Docket No.: **1421-399**

: PETITION DECISION

This is in response to the renewed petition under 37 CFR § 1.59(b), filed January 30, 2012, to expunge information from the above identified application. This application has been allowed.

Petitioner requests that the material submitted to the Patent Office on August 8, 2011 be expunged from the record. Petitioner states either: (A) that the information contains trade secret material, proprietary material and/or material that is subject to a protective order which has not been made public; or (B) that the information submitted was unintentionally submitted and the failure to obtain its return would cause irreparable harm to the party who submitted the information or to the party in interest on whose behalf the information was submitted, and the information has not otherwise been made public. The petition fee set forth in 37 CFR § 1.17(g) has been paid.

The reasons set forth in this petition establishes to the satisfaction of the Director that expungement of the information is appropriate. The file entry for this document has been closed and as such the document is no longer publicly available, which is the IFW equivalent to removal of a paper document from a paper file wrapper.

Therefore, petitioner's petition is GRANTED.

Should there be any questions about this decision please contact Marianne C. Seidel by letter addressed to Director, TC 1600, at the address listed above, or by telephone at 571-272-0584 or by facsimile sent to the general Office facsimile number, 571-273-8300.

/MC Seidel/
Marianne C. Seidel, Quality Assurance Specialist
Technology Center 1600

Doc code : PET.OP.AGE
Description : Petition to make special based on Age/Health

PTO/SB/130 (07-09)
Approved for use through 07/31/2012. OMB 0651- 0031
U.S. Patent and Trademark Office; U.S. DEPARTMENT OF COMMERCE
Under the Paperwork Reduction Act of 1995, no persons are required to respond to a collection of information unless it contains a valid OMB control number

PETITION TO MAKE SPECIAL BASED ON AGE FOR ADVANCEMENT OF EXAMINATION UNDER 37 CFR 1.102(c)(1)

Application Information

Application Number	12/546,909	Confirmation Number	4264	Filing Date	2009-08-25
Attorney Docket Number (optional)	1421-400	Art Unit	1661	Examiner	Anne Marie Grunberg
First Named Inventor	WILLIAM H. EBY				
Title of Invention	SOYBEAN CULTIVAR 88192265				

Attention: Office of Petitions
An application may be made special for advancement of examination upon filing of a petition showing that the applicant is 65 years of age, or more. No fee is required with such a petition. See 37 CFR 1.102(c)(1) and MPEP 708.02 (IV).

APPLICANT HEREBY PETITIONS TO MAKE SPECIAL FOR ADVANCEMENT OF EXAMINATION IN THIS APPLICATION UNDER 37 CFR 1.102(c)(1) and MPEP 708.02 (IV) ON THE BASIS OF THE APPLICANT'S AGE.

A grantable petition requires one of the following items:
(1) Statement by one named inventor in the application that he/she is 65 years of age, or more; or
(2) Certification by a registered attorney/agent having evidence such as a birth certificate, passport, driver's license, etc. showing one named inventor in the application is 65 years of age, or more.

Name of Inventor who is 65 years of age, or older

Given Name	Middle Name	Family Name	Suffix
William	H.	EBY	

A signature of the applicant or representative is required in accordance with 37 CFR 1.33 and 10.18.
Please see 37 CFR 1.4(d) for the format of the signature.

Select (1) or (2) :

○ (1) I am an inventor in this application and I am 65 years of age, or more.

● (2) I am an attorney or agent registered to practice before the Patent and Trademark Office, and I certify that I am in possession of evidence, and will retain such in the application file record, showing that the inventor listed above is 65 years of age, or more.

Signature	/Robert J. Jondle/	Date (YYYY-MM-DD)	2011-05-09
Name	Robert J. Jondle	Registration Number	33915

PTO/SB/130 (07-09)
Approved for use through 07/31/2012. OMB 0651- 0031
U.S. Patent and Trademark Office; U.S. DEPARTMENT OF COMMERCE
Under the Paperwork Reduction Act of 1995, no persons are required to respond to a collection of information unless it contains a valid OMB control number

Privacy Act Statement

The Privacy Act of 1974 (P.L. 93-579) requires that you be given certain information in connection with your submission of the attached form related to a patent application or patent. Accordingly, pursuant to the requirements of the Act, please be advised that: (1) the general authority for the collection of this information is 35 U.S.C. 2(b)(2); (2) furnishing of the information solicited is voluntary; and (3) the principal purpose for which the information is used by the U.S. Patent and Trademark Office is to process and/or examine your submission related to a patent application or patent. If you do not furnish the requested information, the U.S. Patent and Trademark Office may not be able to process and/or examine your submission, which may result in termination of proceedings or abandonment of the application or expiration of the patent.

The information provided by you in this form will be subject to the following routine uses:

1. The information on this form will be treated confidentially to the extent allowed under the Freedom of Information Act (5 U.S.C. 552) and the Privacy Act (5 U.S.C. 552a). Records from this system of records may be disclosed to the Department of Justice to determine whether the Fr eedom of Information Act requires disclosure of these records.

2. A record from this system of records may be disclosed, as a routine use, in the course of presenting evidence to a court, magistrate, or administrative tribunal, including disclosures to opposing counsel in the course of settlement negotiations.

3. A record in this system of records may be disclosed, as a routine use, to a Member of Congress submitting a request involving an individual, to whom the record pertains, when the individual has requested assistance from the Member with respect to the subject matter of the record.

4. A record in this system of records may be disclosed, as a routine use, to a contractor of the Agency having need for the information in order to perform a contract. Recipients of information shall be required to comply with the requirements of the Privacy Act of 1974, as amended, pursuant to 5 U.S.C. 552a(m).

5. A record related to an International Application filed under the Patent Cooperation Treaty in this system of records may be disclosed, as a routine use, to the International Bureau of the World Intellectual Property Organization, pursuant to the Patent Cooperation Treaty.

6. A record in this system of records may be disclosed, as a routine use, to another federal agency for purposes of National Security review (35 U.S.C. 181) and for review pursuant to the Atomic Energy Act (42 U.S.C. 218(c)).

7. A record from this system of records may be disclosed, as a routine use, to the Administrator, General Services, or his/her designee, during an inspection of records conducted by GSA as part of that agency's responsibility to recommend improvements in records management practices and programs, under authority of 44 U.S.C. 2904 and 2906. Such disclosure shall be made in accordance with the GSA regulations governing inspection of records for this purpose, and any other relevant (i.e., GSA or Commerce) directive. Such disclosure shall not be used to make determinations about indivi duals.

8. A record from this system of records may be disclosed, as a routine use, to the public after either publication of the application pursuant to 35 U.S.C. 122(b) or issuance of a patent pursuant to 35 U.S.C. 151. Further, a record may be disclosed, subject to the limitations of 37 CFR 1.14, as a routine use, to the public if the record was filed in an application which became abandoned or in which the proceedings were terminated and which application is referenced by either a published application, an application open to public inspections or an issued patent.

9. A record from this system of records may be disclosed, as a routine use, to a Federal, State, or local law enforcement agency, if the USPTO becomes aware of a violation or potential violation of law or regulation.

UNITED STATES PATENT AND TRADEMARK OFFICE

Commissioner for Patents
United States Patent and Trademark Office
P.O. Box 1450
Alexandria, VA 22313-1450
www.uspto.gov

In re Application of
William H. Eby

Application No. 12546909

Filed: August 25,2009

Attorney Docket No. 1421-400

:DECISION ON PETITION TO MAKE SPECIAL
:UNDER 37 CFR 1.102(c)(1)

This is a decision on the electronic petition under 37 CFR 1.102 (c)(1), filed 09-MAY-2011 to make the above-identified application special based on applicant's age as set forth in MPEP § 708.02, Section IV.

The petition is **GRANTED**.

A grantable petition to make an application special under 37 CFR 1.102(c)(1), MPEP § 708.02, Section IV: Applicant's Age must include a statement by applicant or a registered practitioner having evidence that applicant is at least 65 years of age. No fee is required.

Accordingly, the above-identified application has been accorded "special" status and will be taken up for action by the examiner upon the completion of all pre-examination processing.

Telephone inquiries concerning this electronic decision should be directed to the Electronic Business Center at 866-217-9197.

All other inquiries concerning either the examination or status of the application should be directed to the Technology Center.

UNITED STATES PATENT AND TRADEMARK OFFICE

UNITED STATES DEPARTMENT OF COMMERCE
United States Patent and Trademark Office
Address: COMMISSIONER FOR PATENTS
P.O. Box 1450
Alexandria, Virginia 22313-1450
www.uspto.gov

APPLICATION NO.	FILING DATE	FIRST NAMED INVENTOR	ATTORNEY DOCKET NO.	CONFIRMATION NO.
12/546,909	08/25/2009	William H. Eby	1421-400	4264

32905 7590 08/25/2011
JONDLE & ASSOCIATES, P.C.
858 HAPPY CANYON ROAD, SUITE 230
CASTLE ROCK, CO 80108

EXAMINER
MCELWAIN, ELIZABETH F

ART UNIT	PAPER NUMBER
1638	

NOTIFICATION DATE	DELIVERY MODE
08/25/2011	ELECTRONIC

Please find below and/or attached an Office communication concerning this application or proceeding.

The time period for reply, if any, is set in the attached communication.

Notice of the Office communication was sent electronically on above-indicated "Notification Date" to the following e-mail address(es):

JondleOA@jondlelaw.com

UNITED STATES PATENT AND TRADEMARK OFFICE

Commissioner for Patents
United States Patent and Trademark Office
P.O. Box 1450
Alexandria, VA 22313-1450
www.uspto.gov

AUG 2 5 2011

JONDLE & ASSOCIATES P.C.
858 HAPPY CANYON ROAD SUITE 230
CASTLE ROCK CO 80108

In re Application of:	:
William H. Eby	:
Serial No.: 12/546,909	: PETITION DECISION
Filed: August 25, 2009	:
Attorney Docket No.: **1421-400**	

This is in response to the petition under 37 CFR § 1.59(b), filed August 8, 2011, to expunge information from the above identified application. This application has not been allowed.

Petitioner requests that the Reply to Request for Information under 37 CFR 1.105, and attachment thereto, submitted to the Patent Office on August 8, 2011, be expunged from the record. Petitioner states either: (A) that the information contains trade secret material, proprietary material and/or material that is subject to a protective order which has not been made public; or (B) that the information submitted was unintentionally submitted and the failure to obtain its return would cause irreparable harm to the party who submitted the information or to the party in interest on whose behalf the information was submitted, and the information has not otherwise been made public. The petition fee set forth in 37 CFR § 1.17(g) has been paid.

This is an examined application which is currently under non-final rejection. As such the information provided has been reviewed, in part, but proceedings in the application have not been terminated. As stated in M.P.E.P. 724, upon allowance or other action closing prosecution in an application, petition may be made for return of Proprietary information. The information cannot be expunged at this time.

The petition is **DISMISSED**. Petitioner may resubmit the petition subsequent to a Notice of Allowability or *ex parte Quayle* action being mailed in the application. No additional petition fee will be required at that time.

Should there be any questions about this decision please contact Marianne C. Seidel by letter addressed to Director, TC 1600, at the address listed above, or by telephone at 571-272-0584 or by facsimile sent to the general Office facsimile number, 571-273-8300.

/MC Seidel/
Marianne C. Seidel, Quality Assurance Specialist
Technology Center 1600

UNITED STATES PATENT AND TRADEMARK OFFICE

UNITED STATES DEPARTMENT OF COMMERCE
United States Patent and Trademark Office
Address: COMMISSIONER FOR PATENTS
P.O. Box 1450
Alexandria, Virginia 22313-1450
www.uspto.gov

APPLICATION NO.	FILING DATE	FIRST NAMED INVENTOR	ATTORNEY DOCKET NO.	CONFIRMATION NO.
12/546,909	08/25/2009	William H. Eby	1421-400	4264

32905 7590 01/20/2012
JONDLE & ASSOCIATES, P.C.
858 HAPPY CANYON ROAD, SUITE 230
CASTLE ROCK, CO 80108

EXAMINER
MCELWAIN, ELIZABETH F

ART UNIT	PAPER NUMBER
1638	

NOTIFICATION DATE	DELIVERY MODE
01/20/2012	ELECTRONIC

Please find below and/or attached an Office communication concerning this application or proceeding.

The time period for reply, if any, is set in the attached communication.

Notice of the Office communication was sent electronically on above-indicated "Notification Date" to the following e-mail address(es):

JondleOA@jondlelaw.com

UNITED STATES PATENT AND TRADEMARK OFFICE

Commissioner for Patents
United States Patent and Trademark Office
P.O. Box 1450
Alexandria, VA 22313-1450
www.uspto.gov

JAN 20 2012

JONDLE & ASSOCIATES P.C.
858 HAPPY CANYON ROAD SUITE 230
CASTLE ROCK CO 80108

In re Application of:	:
William H. Eby	: PETITION DECISION
Serial No.: 12/546,909	:
Filed: August 25, 2009	:
Attorney Docket No.: **1421-400**	

This is in response to the renewed petition under 37 CFR § 1.59(b), filed January 12, 2012, to expunge information from the above identified application. This application has been allowed.

Petitioner requests that the material submitted to the Patent Office on August 8, 2011 be expunged from the record. Petitioner states either: (A) that the information contains trade secret material, proprietary material and/or material that is subject to a protective order which has not been made public; or (B) that the information submitted was unintentionally submitted and the failure to obtain its return would cause irreparable harm to the party who submitted the information or to the party in interest on whose behalf the information was submitted, and the information has not otherwise been made public. The petition fee set forth in 37 CFR § 1.17(g) has been paid.

The reasons set forth in this petition establishes to the satisfaction of the Director that expungement of the information is appropriate. The file entry for this document has been closed and as such the document is no longer publicly available, which is the IFW equivalent to removal of a paper document from a paper file wrapper.

Therefore, petitioner's petition is GRANTED.

Should there be any questions about this decision please contact Marianne C. Seidel by letter addressed to Director, TC 1600, at the address listed above, or by telephone at 571-272-0584 or by facsimile sent to the general Office facsimile number, 571-273-8300.

/MC Seidel/
Marianne C. Seidel, Quality Assurance Specialist
Technology Center 1600

UNITED STATES PATENT AND TRADEMARK OFFICE

Commissioner for Patents
United States Patent and Trademark Office
P.O. Box 1450
Alexandria, VA 22313-1450
www.uspto.gov

Gray Robinson
ATTN: STEFAN V. STEIN/ IP DEPT.
201 N. Franklin Street, Suite 2200
Post Office Box 3324
TAMPA FL 33601-3324

MAILED

SEP 30 2010

OFFICE OF PETITIONS

In re Application of	:	
Chin et al.	:	DECISION REFUSING STATUS
Application No. 12/546,914	:	UNDER 37 CFR 1.47(a)
Filed: August 25, 2009	:	
Attorney Docket No. 55115619.12	:	

This is in response to the renewed petition under 37 CFR 1.47(a), filed August 20, 2010.

The petition is dismissed.

Rule 47 applicant is given TWO MONTHS from the mailing date of this decision to reply, correcting the below-noted deficiencies. Any reply should be entitled "Request for Reconsideration of Petition Under 37 CFR 1.47(a)," and should only address the deficiencies noted below, except that the reply may include an oath or declaration executed by the non-signing inventor. **FAILURE TO RESPOND WILL RESULT IN ABANDONMENT OF THE APPLICATION.** Any extensions of time will be governed by 37 CFR 1.136(a).

A grantable petition under 37 CFR 1.47(a) requires: (1) proof that the non-signing inventor cannot be reached or refuses to sign the oath or declaration after having been presented with the application papers (specification, claims and drawings); (2) an acceptable oath or declaration in compliance with 35 U.S.C. §§ 115 and 116; (3) the petition fee; and (4) a statement of the last known address of the non-signing inventor. Applicant lacks items (2) set forth above.

Although applicant has provided a declaration executed by former non-signing inventor Chin, the declaration submitted on August 20, 2010 contains changes made in ink in the declaration. The Office will not consider whether noninitialed and/or nondated alterations were made before or after signing of the oath or declaration but will require a new oath or declaration. See MPEP 605.04(a). In this instance, Rule 47 applicant may instead submit a *signed* supplemental application data sheet since the changes were made to the mailing address of the inventor. 37 CFR 1.76(c).

Further correspondence with respect to this matter should be addressed as follows:

By mail: Mail Stop PETITIONS
Commissioner for Patents
Post Office Box 1450
Alexandria, VA 22313-1450

By hand: Customer Service Window
Mail Stop Petitions
Randolph Building
401 Dulany Street
Alexandria, VA 22314

By fax: (571) 273-8300
ATTN: Office of Petitions

Telephone inquiries should be directed to the undersigned at (571) 272-3215.

Charlema Grant
Petitions Attorney
Office of Petitions

UNITED STATES PATENT AND TRADEMARK OFFICE

Commissioner for Patents
United States Patent and Trademark Office
P.O. Box 1450
Alexandria, VA 22313-1450
www.uspto.gov

Gray Robinson
ATTN: STEFAN V. STEIN/ IP DEPT.
201 N. Franklin Street, Suite 2200
Post Office Box 3324
TAMPA FL 33601-3324

MAILED
SEP 30 2011
OFFICE OF PETITIONS

In re Application of Jason Chin and Marc Jung Application No. 12/546,914 Filed: August 25, 2009 Attorney Dkt. No. 55115619.00012 For: TWIN BUCKLE ASSEMBLY WITH DUAL RELEASE POSITIONS	DECISION NOTING JOINDER OF INVENTOR AND PETITION UNDER 37 CFR 1.47(a)

Papers have been filed on November 23, 2010, in response to a "Decision Refusing Status Under 37 CFR 1.47(a)," mailed September 30, 2010, and include a Declaration that is signed by a previously non-signing inventor, Chin, in compliance with 37 CFR 1.63.

The petition is **DISMISSED AS MOOT**.

In view of the joinder of the inventor, further consideration under § 1.47(a) is not necessary. This application does not have any Rule 1.47 status and no such status should appear on the record for this file. This application need not be returned to this Office for any further consideration under 37 CFR 1.47(a).

This application is being referred to the Office of Data Management for further processing in the normal course of business.

Telephone inquiries should be directed to the undersigned at (571) 272-3215.

Charlema Grant
Attorney Advisor
Office of Petitions

UNITED STATES PATENT AND TRADEMARK OFFICE

UNITED STATES DEPARTMENT OF COMMERCE
United States Patent and Trademark Office
Address: COMMISSIONER FOR PATENTS
P.O. Box 1450
Alexandria, Virginia 22313-1450
www.uspto.gov

APPLICATION NO.	FILING DATE	FIRST NAMED INVENTOR	ATTORNEY DOCKET NO.	CONFIRMATION NO.
12/546,928	08/25/2009	Kengo UCHIBORI	P37130	4292

7055 7590 11/17/2010
GREENBLUM & BERNSTEIN, P.L.C.
1950 ROLAND CLARKE PLACE
RESTON, VA 20191

EXAMINER
VO, PETER DUNG BA

ART UNIT	PAPER NUMBER
3718	

NOTIFICATION DATE	DELIVERY MODE
11/17/2010	ELECTRONIC

Please find below and/or attached an Office communication concerning this application or proceeding.

The time period for reply, if any, is set in the attached communication.

Notice of the Office communication was sent electronically on above-indicated "Notification Date" to the following e-mail address(es):

gbpatent@gbpatent.com
pto@gbpatent.com

UNITED STATES PATENT AND TRADEMARK OFFICE

Commissioner for Patents
United States Patent and Trademark Office
P.O. Box 1450
Alexandria, VA 22313-1450
www.uspto.gov

GREENBLUM & BERNSTEIN, P.L.C.
1950 ROLAND CLARKE PLACE
RESTON VA 20191

In re Application of	:	
UCHIBORI, KENGO et al	:	DECISION ON REQUEST TO
Application No. 12/546,928	:	PARTICIPATE IN PATENT
Filed: August 25, 2009	:	PCT/PROSECUTION HIGHWAY
Attorney Docket No. P37130	:	PROGRAM AND PETITION
For: VIDEO GAME PROCESSING APPARATUS, METHOD AND COMPUTER PROGRAM PRODUCT FOR CONTROLLING PROGRESS OF A VIDEO GAME	:	37 CFR 1.102(d)

This is a decision on the request to participate in the Patent Prosecution Highway (PPH) program and the petition under 37 CFR 1.102(d), filed November 12, 2010, to make the above-identified application special.

The request and petition are granted.

A grantable request to participate in the PPH pilot program and petition to make special require:

(1) The U.S. application must validly claim priority under 35 U.S.C. 119(a) to one or more applications filed in the JPO;
(2) Applicant must submit a copy of the allowable/patentable claim(s) from the JPO/PCT application(s) along with an English translation thereof and a statement that the English translation is accurate;
(3) All the claims in the U.S. application must sufficiently correspond or be amended to sufficiently correspond to the allowable/patentable claim(s) in the JPO application(s);
(4) Examination of the U.S. application has not begun;
(5) Applicant must submit a copy of all the office actions from each of the JPO/PCT application(s) containing the allowable/patentable claim(s) along with an English translation thereof and a statement that the English translation is accurate; and
(6) Applicant must submit an IDS listing the documents cited by the JPO examiner in the JPO office action along with copies of documents except U.S. patents or U.S. patent application publications.

In light of the petition being properly submitted, the request to participate in the PPH program and the petition comply with the above requirements. Accordingly, the above-identified application has been accorded "special" status.

The applicant is encouraged to cite and submit all relevant prior art references, if any, to facilitate examination in this application. This application will be forwarded to an examiner for examination.

Telephone inquiries concerning this decision should be directed to Henry C. Yuen at 571-272-4856. All other inquiries concerning the examination or status of the application should be directed to Peter Vo, the SPE of Art Unit 3714, and 571-272-4690 for Class 463/31 and also accessible in the PAIR system at http://www.uspto.gov/ebc.index.html.

Petition is **granted**.

/Henry C. Yuen/

Henry C. Yuen, Special Programs Examiner
Technology Center 3700 – Mechanical Engineering,
Manufacturing and Products
571-272-4856

UNITED STATES PATENT AND TRADEMARK OFFICE

Commissioner for Patents
United States Patent and Trademark Office
P.O. Box 1450
Alexandria, VA 22313-1450
www.uspto.gov

JONES, WALKER, WAECHTER, POITEVENT, CARRÈRE & DENEGRE, L.L.P.
5TH FLOOR, FOUR UNITED PLAZA
8555 UNITED PLAZA BOULEVARD
BATON ROUGE, LA 70809

MAILED

OCT 24 2011

OFFICE OF PETITIONS

In re Application of	:	
Dennis Long	:	
Application No. 12/546,958	:	DECISION ON PETITION
Filed: August 25, 2009	:	TO WITHDRAW
Attorney Docket No. 22630/119490-00	:	FROM RECORD
	:	

This is a decision on the Request to Withdraw as attorney or agent of record under 37 C.F.R. § 1.36(b), filed September 22, 2011.

The request is **APPROVED**.

A grantable request to withdraw as attorney/agent of record must be signed by every attorney/agent seeking to withdraw or contain a clear indication that one attorney is signing on behalf of another/others. A request to withdraw will not be approved unless at least 30 (thirty) days would remain between the date of approval and the later of the expiration date of a time to file a response or the expiration date of the maximum time period which can be extended under 37 C.F.R. § 1.136(a).

The request was signed by Chad A. Grand on behalf of all attorneys of record. All attorneys/agents have been withdrawn. Applicant is reminded that there is no attorney of record at this time.

All future correspondence will be directed to the first named inventor Dennis Long at the address indicated below.

Telephone inquiries concerning this decision should be directed to Terri Johnson at 571-272-2991.

/Terri Johnson/
Terri Johnson
Petitions Examiner
Office of Petitions

cc: **Dennis Long**
2161 Thornapple River Drive
Grand Rapids, MI 49546

PTO/SB/20PCT-KR (06-10)
Approved for use through 01/31/2012. OMB 0651-0058
U.S. Patent and Trademark Office; U. S. DEPARTMENT OF COMMERCE
Under the Paperwork Reduction Act of 1995, no persons are required to respond to a collection of information unless it displays a valid OMB control number.

REQUEST FOR PARTICIPATION IN THE PATENT COOPERATION TREATY - PATENT PROSECUTION HIGHWAY (PCT-PPH) PILOT PROGRAM BETWEEN THE KOREAN INTELLECTUAL PROPERTY OFFICE (KIPO) AND THE USPTO

Application No:	12547145	Filing date:	2009-08-25
First Named Inventor:	Gang Xu		
Title of the Invention:	Thermodynamic Process Control Based on Pseudo-Density Root For Equation of State		

THIS REQUEST FOR PARTICIPATION IN THE PCT-PPH PILOT PROGRAM ALONG WITH THE REQUIRED DOCUMENTS MUST BE SUBMITTED VIA EFS-WEB. INFORMATION REGARDING EFS-WEB IS AVAILABLE AT HTTP://WWW.USPTO.GOV/EBC/EFS_HELP.HTML

APPLICANT HEREBY REQUESTS PARTICIPATION IN THE PCT-PPH PROGRAM AND PETITIONS TO MAKE THE ABOVE-IDENTIFIED APPLICATION SPECIAL UNDER THE PCT-PPH PROGRAM.

The above-identified application is (1) a national stage entry of the corresponding PCT application, or (2) a national stage entry of another PCT application which claims priority to the corresponding PCT application, or (3) a national application that claims domestic/ foreign priority to the corresponding PCT application, or (4) a national application which forms the basis for the priority claim in the corresponding PCT application, or (5) a continuing application of a U.S. application that satisfies one of (1) to (4) above, or (6) a U.S. application that claims domestic benefit to a U.S. provisional application which forms the basis for the priority claim in the corresponding PCT application.

The corresponding PCT application number(s) is/are: PCT/US2010/046098

The international filing date of the corresponding PCT application(s) is/are: 2010-08-20

I. List of Required Documents:

a. **A copy of the latest international work product (WO/ISA, WO/IPEA, or IPER) in the above–identified corresponding PCT application(s)**

☑ Is attached.

☐ Is not attached because the document is already in the U.S. application.

b. **A copy of all claims which were indicated as having novelty, inventive step and industrial applicability in the above-identified corresponding PCT application(s).**

☑ Is attached.

☐ Is not attached because the document is already in the U.S. application.

c. **English translations of the documents in a. and b. above are attached (if the documents are not in the English language). A statement that the English translation is accurate is attached for the document in b. above.**

This collection of information is required by 35 U.S.C. 119, 37 CFR 1.55, and 37 CFR 1.102(d). The information is required to obtain or retain a benefit by the public, which is to file (and by the USPTO to process) an application. Confidentiality is governed by 35 U.S.C. 122 and 37 CFR 1.11 and 1.14. This collection is estimated to take 2 hours to complete, including gathering, preparing, and submitting the completed application form to the USPTO. Time will vary depending upon the individual case. Any comments on the amount of time you require to complete this form and/or suggestions for reducing this burden should be sent to the Chief Information Officer, U.S. Patent and Trademark Office, U.S. Department of Commerce, P.O. Box 1450, Alexandria, VA 22313-1450. DO NOT SEND FEES OR COMPLETED FORMS TO THIS ADDRESS.

Approved for use through 01/31/2012. OMB 0651-0058
U.S.Patent and Trademark Office; U.S. DEPARTMENT OF COMMERCE

Under the Paperwork Reduction Act of 1995, no persons are required to respond to a collection of information unless it displays a valid OMB control number.

REQUEST FOR PARTICIPATION IN THE PCT-PPH PILOT PROGRAM BETWEEN THE KIPO AND THE USPTO

(continued)

Application No.:	12547145
First Named Inventor:	Gang Xu

d. **(1) An information disclosure statement listing the documents cited in the international work products (ISR, WO/ISA, WO/IPEA, IPER) of the corresponding PCT application.**

- [✓] Is attached
- [ ] Has already been filed in the above-identified U.S. application on _____

(2) Copies of all documents (except) for U.S. patents or U.S. patent application publications)

- [✓] Are attached.
- [ ] Have already been filed in the above-identified U.S. application on _____

II. Claims Correspondence Table:

Claims in US Application	Patentable Claims in the corresponding PCT Application	Explanation regarding the correspondence
1-38	1-38	Claims are Identical

III. All the claims in the US application sufficiently correspond to the patentable claims in the corresponding PCT application.

Signature /Andrew M. Metrailer/	Date 2011-08-02
Name (Print/Typed) Andrew M. Metrailer	Registration Number 67,353

CLAIMS

What is claimed is:

1. A system, comprising:

a computer system comprising at least one processor;

a thermodynamic process simulation application; and

a thermodynamic equation of state application that, when executed by the at least one processor of the computer system, determines a density root based on at least a specified pressure, a specified temperature, and a first point of departure from an equation of state, wherein the first point of departure is determined based on a proportional relationship between the ratio of pressure to density of the equation of state at the first point of departure and the rate of change of pressure with respect to density of the equation of state at the first point of departure, and wherein the density root is determined as a pseudo-density when the specified pressure is less than the pressure at the first point of departure,

wherein the thermodynamic process simulation application executes on the at least one processor of the computer system and invokes the thermodynamic equation of state application iteratively to determine a result based on the density root determined by the thermodynamic equation of state application.

2. The system of claim 1, wherein the system processes the result determined by the thermodynamic process simulation application to execute at least one action from the following group of actions: controlling a thermodynamic process control component, training an operator of the thermodynamic process control component, predicting a failure time of the thermodynamic process control component, and validating a design for the thermodynamic process control component.

3. The system of claim 1, wherein the first point of departure is determined as the point (ρ_{dp1}, P_{dp1}) on the isothermic curve of pressure P versus density ρ at the specified temperature derived from the equation of state where

$$\frac{\partial P}{\partial \rho} = \beta \frac{P}{\rho} + \Omega$$

where β is a constant selected subject to the constraint $\beta \geq 0.5$, where $\frac{\partial P}{\partial \rho}$ is the partial derivative of pressure P with respect to density ρ of the equation of state, and where Ω is an optional offset.

4. The system of claim 3, wherein the constant β is selected to have a value in the range from 0.7 to 3.0.

5. The system of claim 3, wherein the constant β is selected to have a value of about 1.0.

6. The system of claim 1, wherein the pseudo-density is determined based on a first extrapolation equation that comprises a density squared term.

7. The system of claim 6, wherein the first point of departure is designated as the point (ρ_{dp1}, P_{dp1}) and wherein the first extrapolation equation is

$$P = P_{dp1} + b(\rho - \rho_{dp1}) + c(\rho - \rho_{dp1})^2$$

where b and c are constants.

8. The system of claim 7, wherein the constant $b = \frac{\partial P}{\partial \rho}\Big|_{dp1}$, the value of the partial derivative of pressure P with respect to density ρ of the equation of state at temperature T at the first point of departure.

9. The system of claim 1, wherein the first point of departure is designated as the point (ρ_{dp1}, P_{dp1}) wherein the density root is further determined based on a specified phase and on a second point of departure from the equation of state, designated as the point (ρ_{dp2}, P_{dp2}), wherein ρ_{dp2} is less than ρ_{dp1}, wherein the density root is determined as the pseudo-density when the specified phase is a phase two and the specified pressure is greater than P_{dp2}, and wherein the density root is determined as the pseudo-density when the specified phase is a phase one and the specified pressure is less than P_{dp1}.

10. The system of claim 9, wherein when the specified phase is a phase two and the specified pressure P is greater than P_{dp2}, the pseudo-density is determined based on a second extrapolation equation that asymptotically approaches the equation of state at high specified pressure.

11. The system of claim 1, wherein the result is a flash condition in a flash evaporator, a distillation condition in a distillation column, an absorption condition in an absorber column, a stripping condition in a stripper column.

12. A system, comprising:

a computer system comprising at least one processor;

a thermodynamic process simulation application; and

a thermodynamic equation of state application that, when executed by the at least one processor of the computer system, determines a density root based on at least a specified pressure, a specified temperature, a specified composition, and a second point of departure from an equation of state, wherein the second point of departure is determined based at least in part on a proportional relationship between the rate of change of pressure with respect to density of the equation of state and the universal gas constant, and wherein the density root is determined as a pseudo-density when the specified pressure is greater than the pressure at the second point of departure,

wherein the thermodynamic process simulation application executes on the at least one processor of the computer system and invokes the thermodynamic equation of state application iteratively to determine a result based on the density root determined by the thermodynamic equation of state application.

13. The system of claim 12, wherein the system processes the result determined by the thermodynamic process simulation application to execute at least one action from the following group of actions: controlling a thermodynamic process control component, training an operator of the thermodynamic process control component, predicting a failure time of the thermodynamic process control component, and validating a design for the thermodynamic process control component.

14. The system of claim 12, wherein the second point of departure is determined as the point (ρ_{dp2}, P_{dp2}) on the isothermic curve of pressure P versus density ρ at the specified temperature derived from the equation of state where

$$\alpha\left(\frac{\partial P}{\partial \rho} - R\right) + (1-\alpha)\frac{\partial P}{\partial \rho}\Big|_{dp1} = \Delta$$

where $\alpha = f(T)$, where α is a non-negative number less than or equal to 1.0, where R is the universal gas constant, where $\frac{\partial P}{\partial \rho}\Big|_{dp1}$ is a constant equal to the value of the partial derivative of pressure P with respect to density ρ of the equation of state at a first point of departure for the specified temperature T, and where Δ is one of a zero value, a constant value, a function of temperature T, and a function of pressure P.

15. The system of claim 14, wherein f(T) = 1.0 for all non-negative values of T.

16. The system of claim 14, wherein f(T) is less than 0.2 for T greater than 2000 K.

17. The system of claim 12, wherein the second point of departure is designated as the point (ρ_{dp2}, P_{dp2}), wherein the density root is further determined based on a specified phase one and on a first point of departure from the equation of state (ρ_{dp1}, P_{dp1}), wherein ρ_{dp2} is less than ρ_{dp1}, wherein the density root is determined as the pseudo-density when specified phase is a phase two and the specified pressure is greater than P_{dp2}, and wherein the density root is determined as the pseudo-density when the specified phase is a phase one and the specified pressure is less than P_{dp1}.

18. The system of claim 17, wherein the first point of departure (ρ_{dp1}, P_{dp1}) is determined as the point on the isothermic curve of pressure P versus density ρ according to the equation of state at which the tangent line to the isothermic curve at the first point of departure coincides approximately to the line that passes through the first point of departure (ρ_{dp1}, P_{dp1}) and through the point $(\rho = 0, P = 0)$.

19. The system of claim 18, wherein the acute angle formed by the tangent line with the line through the points (ρ_{dp1}, P_{dp1}) and $(\rho = 0, P = 0)$ is less than 20 degrees.

20. The system of claim 12, wherein the second point of departure is designated as the point (ρ_{dp2}, P_{dp2}), wherein the pseudo-density is determined based on a second extrapolation equation that comprises a density squared term.

21. The system of claim 20, wherein the second extrapolation equation is

$$P = P_{dp2} + d\left(\frac{1-g}{1-k\rho}\right)(\rho - \rho_{dp2}) + m\left(\frac{1-g}{1-k\rho}\right)(\rho - \rho_{dp2})^2$$

where *d, g, k,* and m are constants.

22. A system, comprising:

a computer system comprising at least one processor;

a thermodynamic process simulation application; and

a thermodynamic equation of state application that, when executed by the at least one processor of the computer system, determines a density root ρ based on at least a specified pressure P, a specified temperature, a specified composition, and a first point of departure from an equation of state (ρ_{dp1}, P_{dp1}), wherein when the specified pressure is less than P_{dp1} the density root ρ is determined as a pseudo-density based on an extrapolation equation that comprises a density squared term,

wherein the thermodynamic process simulation application executes on the at least one processor of the computer system and invokes the thermodynamic equation of state application iteratively to determine a result based on the density root determined by the thermodynamic equation of state application, and

wherein the system processes the result determined by the thermodynamic process simulation application to execute at least one action from the following group of actions: controlling a thermodynamic process control component, training an operator of the thermodynamic process control component, predicting a failure time of the thermodynamic process control component, and validating a design for the thermodynamic process control component.

23. The system of claim 22, wherein the extrapolation equation is

$$P = P_{dp1} + b(\rho - \rho_{dp1}) + c(\rho - \rho_{dp1})^2 + \Gamma$$

where b and c are constants and where Γ is an optional offset.

24. The system of claim 23, wherein the constant $b = \frac{\partial P}{\partial \rho}\Big|_{dp1}$, the partial derivative of pressure P with respect to density ρ of the equation of state at temperature T at the first point of departure.

25. The system of claim 13, wherein the constant $c = -\frac{\left(P_{dp1} + d\frac{\partial P}{\partial \rho}\Big|_{dp1}\right)}{d^2}$ where d is a constant and where $\frac{\partial P}{\partial \rho}\Big|_{dp1}$ is the partial derivative of pressure P with respect to density ρ of the equation of state at temperature T at the first point of departure.

26. The system of claim 25, wherein the constant $d = z_{dp1}(\rho_{sp} - \rho_{dp1})$ where z_{dp1} is a constant equal to the compressibility at the specified temperature T, at pressure P_{dp1}, and at density ρ_{dp1} and where ρ_{sp} is the density at the specified temperature T of the spinoidal point of the isothermic curve of the equation of state.

27. A system, comprising:

a computer system comprising at least one processor;

a thermodynamic process simulation application; and

a thermodynamic equation of state application that, when executed by the at least one processor of the computer system, determines a density root ρ based on at least a specified pressure P, a specified temperature, a specified composition, and a second point of departure from an equation of state (ρ_{dp2}, P_{dp2}), wherein when the specified pressure is greater than P_{dp2} the density root ρ is determined as a pseudo-density based on an extrapolation equation

$$P = P_{dp2} + d\left(\frac{1-g}{1-k\rho}\right)(\rho - \rho_{dp2}) + m\left(\frac{1-g}{1-k\rho}\right)(\rho - \rho_{dp2})^2 + \Gamma$$

where *d, g, k,* and m are constants and where Γ is an optional offset,

wherein the thermodynamic process simulation application executes on the at least one processor of the computer system and invokes the thermodynamic equation of state application iteratively to determine a result based on the density root determined by the thermodynamic equation of state application, and

wherein the system processes the result determined by the thermodynamic process simulation application to execute at least one action from the following group of actions: controlling a thermodynamic process control component, training

an operator of the thermodynamic process control component, predicting a failure time of the thermodynamic process control component, and validating a design for the thermodynamic process control component.

28. The system of claim 27, wherein the constant $d = \frac{\partial P}{\partial \rho}\Big|_{dp2}$, the value of the partial derivative of the pressure P with respect to density ρ at the second point of departure of the equation of state at the specified temperature *T*.

29. The system of claim 27, wherein the constant $g = k\rho_{dp2}$, the product of the constant k times the value of density at the second point of departure of the equation of state at the specified temperature *T*.

30. The system of claim 27, wherein the constant $m = e^R - 1$, where R is the universal gas constant and *e* is the natural logarithm.

31. A system, comprising:

a computer system comprising at least one processor;

a thermodynamic process simulation application; and

a thermodynamic equation of state application that, when executed by the the at least one processor of the computer system, determines a density root based on at least a specified pressure, a specified temperature, a specified composition, a specified phase, a first point of departure from an equation of state, and a second point of departure from the equation of sate, wherein the first point of departure is determined as the point (ρ_{dp1}, P_{dp1}) on the isothermic curve of pressure P versus density ρ at the specified temperature derived from the equation of state where

$$\frac{\partial P}{\partial \rho} = \beta \frac{P}{\rho} + \Omega$$

where β is a constant selected subject to the constraint $\beta \geq 0.5$, where Ω is an optional offset, wherein the second point of departure is determined as the point (ρ_{dp2}, P_{dp2}) on the isothermic curve of pressure P versus density ρ at the specified temperature derived from the equation of state where

$$\alpha\left(\frac{\partial P}{\partial \rho} - R\right) + (1-\alpha)\frac{\partial P}{\partial \rho}\Big|_{dp1} = 0$$

where $\alpha = f(T)$, where α is a non-negative number less than or equal to 1.0, where R is the universal gas constant, where $\frac{\partial P}{\partial \rho}\Big|_{dp1}$ is a constant equal to the value of the partial derivative of pressure P with respect to density ρ of the equation of state at the first point of departure for the specified temperature, wherein ρ_{dp2} is less than ρ_{dp1}, wherein the density root is determined as a pseudo-density when the specified phase is a phase two and the specified pressure is greater than the pressure at the point (ρ_{dp2}, P_{dp2}), and wherein the density root is determined as a pseudo-density when the specified phase is a phase one and the specified pressure is less than the pressure at the point (ρ_{dp1}, P_{dp1}),

wherein the thermodynamic process simulation application executes on the at least one processor of the computer system and invokes the thermodynamic equation of state application iteratively to determine a result based on the density root determined by the thermodynamic equation of state application.

32. The system of claim 31, wherein when the specified phase is a phase one and when the specified pressure is less than P_{dp1} the density root ρ is determined as a pseudo-density based on a first extrapolation equation

$$P = P_{dp1} + b(\rho - \rho_{dp1}) + c(\rho - \rho_{dp1})^2$$

where b and c are constants and wherein when the specified phase is a phase two and the specified pressure is greater than P_{dp2} the density root ρ is determined as a pseudo-density based on a second extrapolation equation

$$P = P_{dp2} + d\left(\frac{1-g}{1-k\rho}\right)(\rho - \rho_{dp2}) + m\left(\frac{1-g}{1-k\rho}\right)(\rho - \rho_{dp2})^2$$

where *d, g, k,* and *m* are constants.

33. The claim of 31, wherein the system processes the result determined by the thermodynamic process simulation application to execute at least one action from the following group of actions: controlling a thermodynamic process control component, training an operator of the thermodynamic process control component, predicting a failure

time of the thermodynamic process control component, and validating a design for the thermodynamic process control component.

34. A computer program product for a thermodynamic modeling system, the computer program product comprising:

a computer readable storage medium having computer usable program code embodied therein;

computer usable program code to determine a density root based on at least a specified pressure, a specified temperature, a specified state, and a first point of departure from an equation of state, wherein the first point of departure is determined based on a proportional relationship between the ratio of pressure to density of the equation of state at the first point of departure and the rate of change of pressure with respect to density of the equation of state at the first point of departure, and wherein the density root is determined as a pseudo-density when the specified state is a first state and when the specified pressure is less than the pressure at the first point of departure.

35. The computer program product of claim 34, wherein the computer usable program code further determines a result based on the density root.

36. The computer program product of claim 34, wherein the first point of departure is determined as the point (ρ_{dp1}, P_{dp1}) on the isothermic curve of pressure P versus density ρ at the specified temperature derived from the equation of state where

$$\frac{\partial P}{\partial \rho} = \beta \frac{P}{\rho} + \Omega$$

where β is a constant selected subject to the constraint $\beta \geq 0.5$, where Ω is an optional offset, where $\frac{\partial P}{\partial \rho}$ is the partial derivative of pressure P with respect to density ρ of the equation of state.

37. The computer program product of claim 36, wherein the computer usable program code further determines the density root based at least in part on a second point of departure from the equation of state, wherein the second point of departure is determined based at least in part on a proportional relationship between the rate of change of pressure with respect to density of the equation of state and the universal gas constant, and wherein

the density root is determined as a pseudo-density when the state is a second state and when the specified pressure is greater than the pressure at the second point of departure.

38. The computer program product of claim 37, wherein the second point of departure is determined as the point (ρ_{dp2}, P_{dp2}) on the isothermic curve of pressure P versus density ρ at the specified temperature derived from the equation of state where

$$\alpha\left(\frac{\partial P}{\partial \rho} - R\right) + (1-\alpha)\frac{\partial P}{\partial \rho}\Big|_{dp1} = 0$$

where $\alpha = f(T)$, where α is a non-negative number less than or equal to 1.0, where R is the universal gas constant, where $\frac{\partial P}{\partial \rho}\Big|_{dp1}$ is a constant equal to the value of the partial derivative of pressure P with respect to density ρ of the equation of state at a first point of departure for the specified temperature *T*.

PATENT COOPERATION TREATY

PCT

INTERNATIONAL SEARCH REPORT

(PCT Article 18 and Rules 43 and 44)

Applicant's or agent's file reference 4284-00101	**FOR FURTHER ACTION**	see Form PCT/ISA/220 as well as, where applicable, item 5 below.
International application No. **PCT/US2010/046098**	International filing date *(day/month/year)* **20 AUGUST 2010 (20.08.2010)**	(Earliest) Priority Date *(day/month/year)* 25 AUGUST 2009 (25.08.2009)
Applicant **INVENSYS SYSTEMS INC. et al**		

This International search report has been prepared by this International Searching Authority and is transmitted to the applicant according to Article 18. A copy is being transmitted to the International Bureau.

This international search report consists of a total of 3 sheets.

☐ It is also accompanied by a copy of each prior art document cited in this report.

1. **Basis of the report**
   a. With regard to the **language**, the international search was carried out on the basis of:
      ☒ the international application in the language in which it was filed
      ☐ a translation of the international application into _____, which is the language of a translation furnished for the purposes of international search (Rules 12.3(a) and 23.1(b))
   b. ☐ This international search report has been established taking into account the **rectification of an obvious mistake** authorized by or notified to this Authority under Rule 91 (Rule 43.6*bis*(a)).
   c. ☐ With regard to any **nucleotide and/or amino acid sequence** disclosed in the international application, see Box No. I.
2. ☐ **Certain claims were found unsearchable** (See Box No. II)
3. ☐ **Unity of invention is lacking** (See Box No. III)
4. With regard to the **title,**
   ☒ the text is approved as submitted by the applicant.
   ☐ the text has been established by this Authority to read as follows:
5. With regard to the **abstract,**
   ☒ the text is approved as submitted by the applicant.
   ☐ the text has been established, according to Rule 38.2, by this Authority as it appears in Box No. IV. The applicant may, within one month from the date of mailing of this international search report, submit comments to this Authority.
6. With regard to the drawings,
   a. the figure of the **drawings** to be published with the abstract is Figure No. 1
      ☒ as suggested by the applicant.
      ☐ as selected by this Authority, because the applicant failed to suggest a figure.
      ☐ as selected by this Authority, because this figure better characterizes the invention.
   b. ☐ none of the figure is to be published with the abstract.

INTERNATIONAL SEARCH REPORT

International application No.
PCT/US2010/046098

A. CLASSIFICATION OF SUBJECT MATTER

G06F 17/00(2006.01)i, G06F 9/455(2006.01)i, G06F 15/16(2006.01)i

According to International Patent Classification (IPC) or to both national classification and IPC

B. FIELDS SEARCHED

Minimum documentation searched (classification system followed by classification symbols)
G06F 17/00; G01L 9/08; G01F 1/86

Documentation searched other than minimum documentation to the extent that such documents are included in the fields searched
Korean utility models and applications for utility models
Japanese utility models and applications for utility models

Electronic data base consulted during the international search (name of data base and, where practicable, search terms used)
eKOMPASS(KIPO internal) & Keywords: , ,

C. DOCUMENTS CONSIDERED TO BE RELEVANT

Category*	Citation of document, with indication, where appropriate, of the relevant passages	Relevant to claim No.
A	US 6209387 B1 (SAVIDGE; JEFFREY L.) 03 April 2001 See abstract; column 1, line 63 - column 2, line 55; column 9, line 34 - column 10, line 29; column 18, line 12 - column 19, line 65; claims 1-4 and figures 3-8.	1-38
A	B.M. MOGNETTI et al., Efficient prediction of thermodynamic properties of quadrupolar fluids from simulation of a coarse-grained model, In: THE JOURNAL OF CHEMICAL PHYSICS 128, 2008, pp.128-140, 10 Mar. 2008 See page 128 - page 131; page 136 - page 137.	1-38
A	F.DOUGLAS SWESTY, Thermodynamically Consistent Interpolation for Equation of State Tables, In: JOURNAL OF COMPUTATIONAL PHYSICS 127, 1996, pp.118-127, 01 August 1996 See page 118; page 120 - page 123.	1-38
A	DSTO IAN A. JOHNSTON, The Noble-Abel Equation of State: Thermodynamic Derivations for Ballistics Modelling, In: Defence Science and Technology Organisation, 2005,30 November 2005 See page 3 - page 5; page 7 - page 10.	1-38

☐ Further documents are listed in the continuation of Box C. ☒ See patent family annex.

* Special categories of cited documents:
"A" document defining the general state of the art which is not considered to be of particular relevance
"E" earlier application or patent but published on or after the international filing date
"L" document which may throw doubts on priority claim(s) or which is cited to establish the publication date of citation or other special reason (as specified)
"O" document referring to an oral disclosure, use, exhibition or other means
"P" document published prior to the international filing date but later than the priority date claimed
"T" later document published after the international filing date or priority date and not in conflict with the application but cited to understand the principle or theory underlying the invention
"X" document of particular relevance; the claimed invention cannot be considered novel or cannot be considered to involve an inventive step when the document is taken alone
"Y" document of particular relevance; the claimed invention cannot be considered to involve an inventive step when the document is combined with one or more other such documents,such combination being obvious to a person skilled in the art
"&" document member of the same patent family

Date of the actual completion of the international search	Date of mailing of the international search report
28 APRIL 2011 (28.04.2011)	**28 APRIL 2011 (28.04.2011)**
Name and mailing address of the ISA/KR Korean Intellectual Property Office Government Complex-Daejeon, 189 Cheongsa-ro, Seo-gu, Daejeon 302-701, Republic of Korea Facsimile No. 82-42-472-7140	Authorized officer PARK, SANG HYUN Telephone No. 82-42-481-8263

INTERNATIONAL SEARCH REPORT

Information on patent family members

International application No.
PCT/US2010/046098

Patent document cited in search report	Publication date	Patent family member(s)	Publication date
US 6209387 B1	03.04.2001	US 05932793A A	03.08.1999
		US 06065328A A	23.05.2000

PATENT COOPERATION TREATY

From the
INTERNATIONAL SEARCHING AUTHORITY

To:
CONLEY ROSE, P.C.

5601 GRANITE PARKWAY, SUITE 750 PLANO TX 75024
USA

PCT

WRITTEN OPINION OF THE INTERNATIONAL SEARCHING AUTHORITY

(PCT Rule 43bis.1)

Date of mailing *(day/month/year)* **28 APRIL 2011 (28.04.2011)**

Applicant's or agent's file reference
4284-00101

FOR FURTHER ACTION
See paragraph 2 below

International application No.	International filing date *(day/month/year)*	Priority date *(day/month/year)*
PCT/US2010/046098	**20 AUGUST 2010 (20.08.2010)**	25 AUGUST 2009 (25.08.2009)

International Patent Classification (IPC) or both national classification and IPC

G06F 17/00(2006.01)i, G06F 9/455(2006.01)i, G06F 15/16(2006.01)i

Applicant

INVENSYS SYSTEMS INC. et al

1. This opinion contains indications relating to the following items:

- [x] Box No. I Basis of the opinion
- [ ] Box No. II Priority
- [ ] Box No. III Non-establishment of opinion with regard to novelty, inventive step and industrial applicability
- [ ] Box No. IV Lack of unity of invention
- [x] Box No. V Reasoned statement under Rule 43bis.1(a)(i) with regard to novelty, inventive step or industrial applicability; citations and explanations supporting such statement
- [ ] Box No. VI Certain documents cited
- [ ] Box No. VII Certain defects in the international application
- [x] Box No. VIII Certain observations on the international application

2. **FURTHER ACTION**
If a demand for international preliminary examination is made, this opinion will be considered to be a written opinion of the International Preliminary Examining Authority ("IPEA") except that this does not apply where the applicant chooses an Authority other than this one to be the IPEA and the chosen IPEA has notified the International Bureau under Rule 66.1bis(b) that written opinions of this International Searching Authority will not be so considered.

If this opinion is, as provided above, considered to be a written opinion of the IPEA, the applicant is invited to submit to the IPEA a written reply together, where appropriate, with amendments, before the expiration of 3 months from the date of mailing of Form PCT/ISA/220 or before the expiration of 22 months from the priority date, whichever expires later.
For further options, see Form PCT/ISA/220.

3. For further details, see notes to Form PCT/ISA/220.

Name and mailing address of the ISA/KR	Date of completion of this opinion	Authorized officer
Korean Intellectual Property Office Government Complex-Daejeon, 189 Cheongsa-ro, Seo-gu, Daejeon 302-701, Republic of Korea Facsimile No. 82-42-472-7140	28 APRIL 2011 (28.04.2011)	PARK, SANG HYUN Telephone No.82-42-481-8263

WRITTEN OPINION OF THE INTERNATIONAL SEARCHING AUTHORITY

International application No.
PCT/US2010/046098

Box No. I Basis of this opinion

1. With regard to the **language**, this opinion has been established on the basis of:

   ☒ the international application in the language in which it was filed

   ☐ a translation of the international application into _____, which is the language of a translation furnished for the purposes of international search (Rules 12.3(a) and 23.1(b))

2. ☐ This opinion has been established taking into account the **rectification of an obvious mistake** authorized by or notified to this Authority under Rule 91 (Rule 43*bis*.1(a))

3. With regard to any **nucleotide and/or amino acid sequence** disclosed in the international application, this opinion has been established on the basis of:

   a. a sequence listing filed or furnished
      ☐ on paper
      ☐ in electronic form

   b. time of filing or furnishing
      ☐ contained in the international application as filed.
      ☐ filed together with the international application in electronic form.
      ☐ furnished subsequently to this Authority for the purposes of search.

4. ☐ In addition, in the case that more than one version or copy of a sequence listing has been filed or furnished, the required statements that the information in the subsequent or additioanl copies is identical to that in the application as filed or does not go beyond the application as filed, as appropriate, were furnished.

5. Additional comments:

WRITTEN OPINION OF THE INTERNATIONAL SEARCHING AUTHORITY

International application No.
PCT/US2010/046098

Box No. V Reasoned statement under Rule 43bis.1(a)(i) with regard to novelty, inventive step or industrial applicability; citations and explanations supporting such statement

1. Statement

Novelty (N)	Claims	1-38	YES
	Claims	NONE	NO
Inventive step (IS)	Claims	1-38	YES
	Claims	NONE	NO
Industrial applicability (IA)	Claims	1-38	YES
	Claims	NONE	NO

2. Citations and explanations :

(1) Reference is made to the following documents:

D1: US 6209387 B1 (SAVIDGE; JEFFREY L.) 03 April 2001
D2: B.M. MOGNETTI et al., Efficient prediction of thermodynamic properties of quadrupolar fluids from simulation of a coarse-grained model, In: THE JOURNAL OF CHEMICAL PHYSICS 128, 2008, pp.128-140, 10 Mar. 2008
D3: F.DOUGLAS SWESTY, Thermodynamically Consistent Interpolation for Equation of State Tables, In: JOURNAL OF COMPUTATIONAL PHYSICS 127, 1996, pp.118-127, 01 August 1996
D4: DSTO IAN A. JOHNSTON, The Noble-Abel Equation of State: Thermodynamic Derivations for Ballistics Modelling, In: Defence Science and Technology Organisation, 2005, 30 November 2005

(2) Novelty & Inventive Steps
Concerning claims 1-11:
Claim 1;
D1, which is considered to represent the most relevant state of the art, discloses a system and method for determining the thermodynamic properties and percentage of each component of a multi-component gas medium by using speed of sound in conjunction with other data. The system comprises a computer system with means for obtaining the temperature, pressure, and speed of sound of a gas medium. The computer system operates according to operating logic stored in memory. According to the operating logic, measurements of the temperature, pressure, speed of sound and acoustic impedance are recorded in a gas pipe or other transport device to determine a convergent temperature range. Next a convergent series is extrapolated from the convergent temperature range and a convergent series calculation using isochoric convergence iterations is performed to obtain estimates of the thermo-physical properties of the gas medium. Thereafter, the percentage of the gas medium which comprises each known gas components is determined using state equations and the estimated thermo-physical properties.
The subject matter of claim 1 is different from that of D1 in a density root based on at least a specified pressure, a specified temperature, and a first point of departure from an equation of state, wherein the first point of departure is determined based on a proportional relationship between the ratio of pressure to density of the equation of state at the first point of departure and the rate of change of pressure with respect to density of the equation of state at the first point of departure, and wherein the density root is determined as a pseudo-density when the specified pressure is less than the pressure at the first point of departure. And it is not obvious to a person skilled in the art by the documents, taken alone or in combination. Therefore, claim 1 is novel and involves an inventive step under PCT Article 33(2) and (3).
Claims 2-11;
Claims 2-11 are dependent on claim 1 and therefore meet the requirements of PCT Article 33(2) and (3).

(Continued on Supplemental Box)

WRITTEN OPINION OF THE INTERNATIONAL SEARCHING AUTHORITY

International application No.

PCT/US2010/046098

Box No. VIII Certain observations on the international application

The following observations on the clarity of the claims, description, and drawings or on the question whether the claims are fully supported by the description, are made:

Claims 25, 26 are worded in reference to "constant c" and "constant d" of claim 13. However, said "constant c" and "constant d" have not been worded in claim 13.

Claim 31 relates to "a system", but claim 33 dependent on claim 31 relates to "the claim of 31". As claim 33 does not clearly define the matter for which protection is sought, this claim does not meet the requirement of PCT Article 6.

Supplemental Box

In case **the space in any of the preceding boxes is not sufficient.**
Continuation of:

Box V

Concerning claims12-21,25-26:
Claim 12;

The subject matter of claim 12 is different from that of D1 in a density root based on at least a specified pressure, a specified temperature, and a first point of departure from an equation of state, wherein the first point of departure is determined based on a proportional relationship between the ratio of pressure to density of the equation of state at the first point of departure and the rate of change of pressure with respect to density of the equation of state at the first point of departure, and wherein the density root is determined as a pseudo-density when the specified pressure is less than the pressure at the first point of departure. And it is not obvious to a person skilled in the art by the documents, taken alone or in combination. Therefore, claim 12 is novel and involves an inventive step under PCT Article 33(2) and (3).
Claims 13-21,25-26;
Claims 13-21,25-26 are dependent on claim 12 and therefore meet the requirements of PCT Article 33(2) and (3).

Concerning claims 22-24:
Claim 22;
The subject matter of claim 22 is different from that of D1 in a density root p based on at least a specified pressure P, a specified temperature, a specified composition, and a first point of departure from an equation of state {pdpl, pdpl) , wherein when the specified pressure is less than Pdpl the density root p is determined as a pseudo-density based on an extrapolation equation that comprises a density squared term. And it is not obvious to a person skilled in the art by the documents, taken alone or in combination. Therefore, claim 22 is novel and involves an inventive step under PCT Article 33(2) and (3).
Claims 23-24;
Claims 23-24 are dependent on claim 22 and therefore meet the requirements of PCT Article 33(2) and (3).

Concerning claims 27-30:
Claim 27;
The subject matter of claim 27 is different from that of D1 in a density root p based on at least a specified pressure P, a specified temperature, a specified composition, and a second point of departure from an equation of state {pdp2 , pdp2) , wherein when the specified pressure is greater than Pdp2 the density root p is determined as a pseudo-density based on an extrapolation equation. And it is not obvious to a person skilled in the art by the documents, taken alone or in combination. Therefore, claim 27 is novel and involves an inventive step under PCT Article 33(2) and (3).
Claims 28-30;
Claims 28-30 are dependent on claim 27 and therefore meet the requirements of PCT Article 33(2) and (3).

(Continued on Supplemental Box)

Supplemental Box

In case **the space in any of the preceding boxes is not sufficient.**
Continuation of :

Box V

Concerning claims 31-33:
Claim 31;
The subject matter of claim 31 is different from that of D1 in a density root based on at least a specified pressure, a specified temperature, a specified composition, a specified phase, a first point of departure from an equation of state, and a second point of departure from the equation of sate, wherein the first point of departure is determined as the point {pdpl, pdpl) on the isothermic curve of pressure P versus density p at the specified temperature derived from the equation of state. And it is not obvious to a person skilled in the art by the documents, taken alone or in combination. Therefore, claim 31 is novel and involves an inventive step under PCT Article 33(2) and (3).
Claims 32-33;
Claims 32-33 are dependent on claim 31 and therefore meet the requirements of PCT Article 33(2) and (3).

Concerning claims 34-38:
Claim 34;
The subject matter of claim 34 is different from that of D1 in a density root based on at least a specified pressure, a specified temperature, a specified state, and a first point of departure from an equation of state, wherein the first point of departure is determined based on a proportional relationship between the ratio of pressure to density of the equation of state at the first point of departure and the rate of change of pressure with respect to density of the equation of state at the first point of departure, and wherein the density root is determined as a pseudo-density when the specified state is a first state and when the specified pressure is less than the pressure at the first point of departure. And it is not obvious to a person skilled in the art by the documents, taken alone or in combination. Therefore, claim 34 is novel and involves an inventive step under PCT Article 33(2) and (3).
Claims 35-38;
Claims 35-38 are dependent on claim 34 and therefore meet the requirements of PCT Article 33(2) and (3).

(3) Industrial Applicability

The subject matter of claims 1-38 is believed to be industrially applicable under PCT Article 33(4) because the claimed invention can be used in the computer industry.

UNITED STATES PATENT AND TRADEMARK OFFICE

UNITED STATES DEPARTMENT OF COMMERCE
United States Patent and Trademark Office
Address: COMMISSIONER FOR PATENTS
P.O. Box 1450
Alexandria, Virginia 22313-1450
www.uspto.gov

APPLICATION NO.	FILING DATE	FIRST NAMED INVENTOR	ATTORNEY DOCKET NO.	CONFIRMATION NO.
12/547,145	08/25/2009	Gang Xu	4284-00100 (09211)	4725

30652 7590 09/29/2011
CONLEY ROSE, P.C.
5601 GRANITE PARKWAY, SUITE 750
PLANO, TX 75024

EXAMINER
THANGAVELU, KANDASAMY

ART UNIT	PAPER NUMBER
2123	

MAIL DATE	DELIVERY MODE
09/29/2011	PAPER

Please find below and/or attached an Office communication concerning this application or proceeding.

The time period for reply, if any, is set in the attached communication.

UNITED STATES PATENT AND TRADEMARK OFFICE

Commissioner for Patents
United States Patent and Trademark Office
P.O. Box 1450
Alexandria, VA 22313-1450
www.uspto.gov

CONLEY ROSE, P.C.
5601 GRANITE PARKWAY, SUITE 750
PLANO TX 75024

In re Application of: XU et al.
Application No. 12/547,145
Atty Docket #: 4284-00100 (09211)
Filed: August 25, 2009
For: THERMODYNAMIC PROCESS CONTROL BASED ON PSEUDO-DENSITY ROOT FOR EQUATION OF STATE

DECISION ON REQUEST TO PARTICIPATE IN PATENT PROSECUTION HIGHWAY PROGRAM AND PETITION TO MAKE SPECIAL UNDER 37 CFR 1.102(a)

This is a decision on the request to participate in the PCT-Patent Prosecution Highway **(PCT-PPH)** pilot program and the petition under 37 CFR 1.102(a), filed August 2, 2011 to make the above- identified application special.

The petition is **GRANTED.**

A grantable request to participate in the PPH program and petition to make special require:

(1) The U.S. application is
(a) a national stage entry of the corresponding PCT application

Or

(b) a national application which forms the basis for the priority claim in the corresponding PCT application

Or

(c) *a* national stage entry of another PCT application (which can be filed in any competent receiving office) which claims priority to the corresponding PCT application

Or

(d) a national application claiming foreign domestic priority to the corresponding PCT application.
Applications subject to a secrecy order (35U.S.C.181) are excluded and not subject to participation in the PCT-PPH pilot program.

Or

(e) a continuing application (continuation, divisional, or continuation-in-part) of the U.S. application which satisfies one of the above (a) to (d) scenarios.

(2) The latest work product in the international phase of the PCT application corresponding to the U.S. application, namely the WO/ISA, or the WO/IPEA, or the IPER, indicates at least one claim in the PCT application has novelty, inventive step and industrial applicability. In case any observation is described in Box VIII of the WO/ISA, or the WO/IPEA, or the IPER which forms the basis for the PCT-PPH request, applicant must identify and explain why the claim(s) is/are not subject to any observation described in Box VIII irrespective of whether an amendment is submitted to correct the observation described in Box VIII. The U.S. application will not be eligible to participate in the PCT-PPH pilot program if applicant does not identify and explain why the claim(s) is/are not subject to the observation described in Box VIII.

Applicant may not file a request to participate in the PCT-PPH pilot program on the basis of an International Search Report (ISR) only.

(3) Applicant must:

a. Ensure all the claims in the U.S. application sufficiently correspond or be amended to sufficiently correspond to one or more of those claims indicated as having novelty, inventive step and industrial applicability and free of any observation described in Box VIII in the latest work product of the corresponding PCT application and

b. Submit a claims correspondence table in English;

The USPTO will accept claims written in dependent form in the U.S. application which are narrower in scope than the claims indicated as having novelty, inventive step and industrial applicability and free of any observation described in Box VIII in the latest work product of the corresponding PCT application.

(4) Substantive Examination of the U.S. application has not begun;

(5) Applicant must submit a copy of:

a. the latest international work product, WO/ISA, or WO/IPEA or PER, which indicated that the claim(s) has/have novelty, inventive step and industrial applicability along with an English translation thereof if the copy of the latest international work product is not in the English language, unless the U.S. application and the corresponding PCT application satisfy the relationship noted in (1)(a) above.

(6) Applicant must submit a copy of:

a. the claims from the corresponding PCT application which were indicated as having novelty, inventive step and industrial applicability in the latest work product of the PCT application,
b. an English translation of the claims and
c. a statement that the English translation is accurate.

If the claims in the U.S. application are identical to the claims from the corresponding PCT application, and are in the English language, applicant may just indicate such in the PCT-PPH request and it will not be necessary for applicant to submit a copy of the claims from the corresponding PCT application.

(7) Applicant must submit:

a. An IDS listing the documents cited in the work products in the international phase of the PCT application corresponding to the U.S. application, namely the WO/ISA, or the WO/IPEA, or the IPER,(unless already submitted in this application)
b. Copies of the documents except U.S. patents or U.S. patent application publications (unless already submitted in this application);

The request to participate in the PPH pilot program and petition are found to comply with the above requirements. Accordingly, the above-identified application has been accorded "special" status.

Telephone inquiries concerning this decision should be directed to Mano Padmanabhan at 571-272-4210.

All other inquiries concerning the examination or status of the application is accessible in the PAIR system at http://www.uspto.gov/ebc/index.html.

The application is being forwarded to the examiner for action on the merits commensurate with this decision.

/Mano Padmanabhan/

Mano Padmanabhan
Quality Assurance Specialist, Technology Center 2100, Workgroup 2180
571-272-4210

UNITED STATES PATENT AND TRADEMARK OFFICE

Commissioner for Patents
United States Patent and Trademark Office
P.O. Box 1450
Alexandria, VA 22313-1450
www.uspto.gov

INVENSYS SYSTEMS, INC., IP DEPARTMENT
33 COMMERCIAL STREET
B51-2J
FOXBORO MA 02035

MAILED
MAR 26 2012
OFFICE OF PETITIONS

In re Application of
Gang Xu et al.
Application No. 12/547,145
Filed: August 25, 2009
Attorney Docket No. 09211

DECISION ON PETITION

This is a decision on the petition under the unintentional provisions of 37 CFR 1.137(b), filed February 7, 2012, to revive the above-identified application.

The petition is **GRANTED**.

The application became abandoned for failure to submit formal drawings in a timely manner in reply to the Notice of Allowability, mailed October 14, 2011, which set a period for reply of three (3) months. Accordingly, this application became abandoned on January 18, 2012. A Notice of Abandonment was mailed on February 7, 2012.

The petition satisfies the requirements of 37 CFR 1.137(b) in that petitioner has supplied (1) the reply in the form of corrected drawings, (2) the petition fee of $1,860, and (3) a proper statement of unintentional delay. Accordingly, the corrected drawings are accepted as being unintentionally delayed.

The application file does not indicate a change of address has been filed in this case, although the address given on the petition differs from the address of record. A change of address should be filed in this case in accordance with MPEP 601.03. A courtesy copy of this decision is being mailed to the address noted on the petition. However, until otherwise instructed, all future correspondence regarding this application will be mailed solely to the address of record.

Telephone inquiries concerning this decision should be directed to Kimberly Inabinet at (571) 272-4618.

This application is being referred to the Office of Data Management for further processing into a patent.

/Kimberly Inabinet/

Kimberly Inabinet
Petitions Examiner
Office of Petitions

cc: Robert M. Bain
100 North Broadway, 17th Floor
St. Louis, MO 63102

UNITED STATES PATENT AND TRADEMARK OFFICE

UNITED STATES DEPARTMENT OF COMMERCE
United States Patent and Trademark Office
Address: COMMISSIONER FOR PATENTS
P.O. Box 1450
Alexandria, Virginia 22313-1450
www.uspto.gov

APPLICATION NO.	FILING DATE	FIRST NAMED INVENTOR	ATTORNEY DOCKET NO.	CONFIRMATION NO.
12/547,161	08/25/2009	Yoshiro Tanaka	090995	4746

EXAMINER
KOONTZ, TAMMY J

ART UNIT	PAPER NUMBER
3974	

NOTIFICATION DATE	DELIVERY MODE
09/01/2010	ELECTRONIC

7590 09/01/2010
WESTERMAN, HATTORI, DANIELS & ADRIAN, LLP
1250 CONNECTICUT AVENUE, NW
SUITE 700
WASHINGTON, DC 20036

DECISION GRANTING PETITION UNDER 37 CFR 1.138(d)

The declaration of express abandonment is recognized

This is in response to the petition under 37 CFR 1.138(d), requesting for a refund of any previously paid search fee and excess claims fee in the above-identified application.

The petition is granted.

The express abandonment is recognized. Any previously paid search fee and excess claims fee are hereby refunded.

Telephone inquiries should be directed to the Office of Data Management at (571) 272-4200.

Patent Publication Branch
Office of Data Management

FORM PET651G (Rev. 08/07)

UNITED STATES PATENT AND TRADEMARK OFFICE

Commissioner for Patents
United States Patent and Trademark Office
P.O. Box 1450
Alexandria, VA 22313-1450
www.uspto.gov

GREENBERG TRAURIG (LV)
3773 HOWARD HUGHES PARKWAY
SUITE 400 NORTH
LAS VEGAS NV 89169

MAILED
SEP 07 2011
OFFICE OF PETITIONS

In re Application of	:	
Joseph P. Thornton	:	
Application No. 12/547,193	:	DECISION GRANTING PETITION
Filed: August 25, 2009	:	UNDER 37 CFR 1.137(b)
Attorney Docket No. 119095.010400	:	

This is a decision on the petition, filed June 1, 2011, which is being treated as a petition under 37 CFR 1.137(b) to revive the instant nonprovisional application for failure to timely notify the U.S. Patent and Trademark (USPTO) of the filing of an application in a foreign country, or under a multinational treaty that requires publication of applications eighteen months after filing. *See* 37 CFR 1.137(f).

The petition is **GRANTED**.

Petitioner states that the instant nonprovisional application is the subject of an application filed in an eighteen-month publication country on August 17, 2010. However, the USPTO was unintentionally not notified of this filing within 45 days subsequent to the filing of the subject application in an eighteen-month publication country.

In view of the above, this application became abandoned pursuant to 35 U.S.C. § 122(b)(2)(B)(iii) and 37 CFR 1.213(c) for failure to timely notify the Office of the filing of an application in a foreign country or under a multilateral international agreement that requires publication of applications 18 months after filing.

A petition to revive an application abandoned pursuant to 35 U.S.C. 122(b)(2)(B)(iii) for failure to notify the USPTO of a foreign filing must be accompanied by:

(1) the required reply which is met by the notification of such filing in a foreign country or under a multinational treaty;
(2) the petition fee as set forth in 37 CFR 1.17(m); and
(3) a statement that the entire delay in filing the required reply from the due date of the reply until the filing of a grantable petition was unintentional.

The instant petition has been found to be in compliance with 37 CFR 1.137(b). Accordingly, the failure to timely notify the USPTO of a foreign or international filing within 45 days after the date of filing of such foreign or international application as provided by 35 U.S.C. § 122(b)(2)(B)(iii) and 37 CFR 1.213(c) is accepted as having been unintentionally delayed.

The previous Request and Certification under 35 U.S.C. § 122(b)(2)(B)(i) has been rescinded. A Notice Regarding Rescission of Nonpublication Request which sets forth the projected publication date accompanies this decision on petition.

Telephone inquiries concerning this decision should be directed to the undersigned at (571) 272-7751.

This application is being forwarded to Technology Center Art Unit 1654 for examination in due course.

/Joan Olszewski/
Joan Olszewski
Petitions Examiner
Office of Petitions

ATTACHMENT: Notice Regarding Rescission of Nonpublication Request

UNITED STATES PATENT AND TRADEMARK OFFICE

UNITED STATES DEPARTMENT OF COMMERCE
United States Patent and Trademark Office
Address: COMMISSIONER FOR PATENTS
P.O. Box 1450
Alexandria, Virginia 22313-1450
www.uspto.gov

APPLICATION NUMBER	FILING OR 371(C) DATE	FIRST NAMED APPLICANT	ATTY. DOCKET NO./TITLE
12/547,193	08/25/2009	Joseph P. Thornton	119095.010400

CONFIRMATION NO. 4806

29747
GREENBERG TRAURIG (LV)
3773 Howard Hughes Parkway
Suite 400 North
Las Vegas, NV 89169

NONPUBLICATION RESCISSION LETTER

OC000000049636375

Date Mailed: 09/02/2011

Communication Regarding Rescission Of Nonpublication Request and/or Notice of Foreign Filing

Applicant's rescission of the previously-filed nonpublication request and/or notice of foreign filing is acknowledged. The paper has been reflected in the Patent and Trademark Office's (USPTO's) computer records so that the earliest possible projected publication date can be assigned.

The projected publication date is 12/08/2011.

If applicant rescinded the nonpublication request before or on the date of "foreign filing,"[1] then no notice of foreign filing is required.

If applicant foreign filed the application after filing the above application and before filing the rescission, and the rescission did not also include a notice of foreign filing, then a notice of foreign filing (not merely a rescission) is required to be filed within 45 days of the date of foreign filing. See 35 U.S.C. § 122(b)(2)(B)(iii), and Clarification of the United States Patent and Trademark Office's Interpretation of the Provisions of 35 U.S.C. § 122(b)(2)(B)(ii)-(iv), 1272 Off. Gaz. Pat. Office 22 (July 1, 2003).

If a notice of foreign filing is required and is not filed within 45 days of the date of foreign filing, then the application becomes abandoned pursuant to 35 U.S.C. § 122(b)(2)(B)(iii). In this situation, applicant should either file a petition to revive or notify the Office that the application is abandoned. See 37 CFR 1.137(f). Any such petition to revive will be forwarded to the Office of Petitions for a decision. Note that the filing of the petition will not operate to stay any period of reply that may be running against the application.

Questions regarding petitions to revive should be directed to the Office of Petitions at (571) 272-3282.

[1] Note, for purpose of this notice, that "foreign filing" means "filing an application directed to the same invention in another country, or under a multilateral international agreement, that requires publication of applications 18 months after filing".

/jolszewski/

Office of Data Management, Application Assistance Unit (571) 272-4000, or (571) 272-4200, or 1-888-786-0101

UNITED STATES PATENT AND TRADEMARK OFFICE

Commissioner for Patents
United States Patent and Trademark Office
P.O. Box 1450
Alexandria, VA 22313-1450
www.uspto.gov

GREENBERG TRAURIG (LV)
3773 HOWARD HUGHES PARKWAY
SUITE 400 NORTH
LAS VEGAS NV 89169

MAILED
JUN 29 2011
OFFICE OF PETITIONS

In re Application of	:	
Joseph P. Thornton	:	
Application No. 12/547,241	:	DECISION GRANTING PETITION
Filed: August 25, 2009	:	UNDER 37 CFR 1.137(b)
Attorney Docket No. 119095.010500	:	

This is a decision on the petition, filed June 1, 2011, which is being treated as a petition under 37 CFR 1.137(b) to revive the instant nonprovisional application for failure to timely notify the U.S. Patent and Trademark (USPTO) of the filing of an application in a foreign country, or under a multinational treaty that requires publication of applications eighteen months after filing. *See* 37 CFR 1.137(f).

The petition is **GRANTED**.

Petitioner states that the instant nonprovisional application is the subject of an application filed in an eighteen-month publication country on August 17, 2010. However, the USPTO was unintentionally not notified of this filing within 45 days subsequent to the filing of the subject application in an eighteen-month publication country.

In view of the above, this application became abandoned pursuant to 35 U.S.C. § 122(b)(2)(B)(iii) and 37 CFR 1.213(c) for failure to timely notify the Office of the filing of an application in a foreign country or under a multilateral international agreement that requires publication of applications 18 months after filing.

A petition to revive an application abandoned pursuant to 35 U.S.C. 122(b)(2)(B)(iii) for failure to notify the USPTO of a foreign filing must be accompanied by:

(1) the required reply which is met by the notification of such filing in a foreign country or under a multinational treaty;
(2) the petition fee as set forth in 37 CFR 1.17(m); and
(3) a statement that the entire delay in filing the required reply from the due date of the reply until the filing of a grantable petition was unintentional.

The instant petition has been found to be in compliance with 37 CFR 1.137(b). Accordingly, the failure to timely notify the USPTO of a foreign or international filing within 45 days after the date of filing of such foreign or international application as provided by 35 U.S.C. § 122(b)(2)(B)(iii) and 37 CFR 1.213(c) is accepted as having been unintentionally delayed.

The previous Request and Certification under 35 U.S.C. § 122(b)(2)(B)(i) has been rescinded. A Notice Regarding Rescission of Nonpublication Request which sets forth the projected publication date accompanies this decision on petition.

Telephone inquiries concerning this decision should be directed to the undersigned at (571) 272-7751.

This application is being forwarded to Technology Center Art Unit 1651 for examination in due course.

/Joan Olszewski/
Joan Olszewski
Petitions Examiner
Office of Petitions

ATTACHMENT: Notice Regarding Rescission of Nonpublication Request

UNITED STATES PATENT AND TRADEMARK OFFICE

UNITED STATES DEPARTMENT OF COMMERCE
United States Patent and Trademark Office
Address: COMMISSIONER FOR PATENTS
P.O. Box 1450
Alexandria, Virginia 22313-1450
www.uspto.gov

APPLICATION NUMBER	FILING OR 371(C) DATE	FIRST NAMED APPLICANT	ATTY. DOCKET NO./TITLE
12/547,241	08/25/2009	Joseph P. Thornton	119095.010500

CONFIRMATION NO. 4902

29747
GREENBERG TRAURIG (LV)
3773 Howard Hughes Parkway
Suite 400 North
Las Vegas, NV 89169

NONPUBLICATION RESCISSION LETTER

OC000000048451857

Date Mailed: 06/28/2011

Communication Regarding Rescission Of Nonpublication Request and/or Notice of Foreign Filing

Applicant's rescission of the previously-filed nonpublication request and/or notice of foreign filing is acknowledged. The paper has been reflected in the Patent and Trademark Office's (USPTO's) computer records so that the earliest possible projected publication date can be assigned.

The projected publication date is 10/06/2011.

If applicant rescinded the nonpublication request before or on the date of "foreign filing,"[1] then no notice of foreign filing is required.

If applicant foreign filed the application after filing the above application and before filing the rescission, and the rescission did not also include a notice of foreign filing, then a notice of foreign filing (not merely a rescission) is required to be filed within 45 days of the date of foreign filing. See 35 U.S.C. § 122(b)(2)(B)(iii), and Clarification of the United States Patent and Trademark Office's Interpretation of the Provisions of 35 U.S.C. § 122(b)(2)(B)(ii)-(iv), 1272 Off. Gaz. Pat. Office 22 (July 1, 2003).

If a notice of foreign filing is required and is not filed within 45 days of the date of foreign filing, then the application becomes abandoned pursuant to 35 U.S.C. § 122(b)(2)(B)(iii). In this situation, applicant should either file a petition to revive or notify the Office that the application is abandoned. See 37 CFR 1.137(f). Any such petition to revive will be forwarded to the Office of Petitions for a decision. Note that the filing of the petition will not operate to stay any period of reply that may be running against the application.

Questions regarding petitions to revive should be directed to the Office of Petitions at (571) 272-3282.

[1] Note, for purpose of this notice, that "foreign filing" means "filing an application directed to the same invention in another country, or under a multilateral international agreement, that requires publication of applications 18 months after filing".

/jolszewski/

Office of Data Management, Application Assistance Unit (571) 272-4000, or (571) 272-4200, or 1-888-786-0101

UNITED STATES PATENT AND TRADEMARK OFFICE

Commissioner for Patents
United States Patent and Trademark Office
P.O. Box 1450
Alexandria, VA 22313-1450
www.uspto.gov

GREENBERG TRAURIG (LV)
3773 HOWARD HUGHES PARKWAY
SUITE 400 NORTH
LAS VEGAS, NV 89169

MAILED
JUL 06 2011
OFFICE OF PETITIONS

In re Application of	:	
Joseph P. Thornton	:	
Application No. 12/547,294	:	DECISION ON PETITION
Filed: August 25, 2009	:	UNDER 37 CFR 1.137(b)
Attorney Docket No. 119095.010700	:	

This is a decision on the petition, filed June 1, 2011 under 37 CFR 1.137(b) to revive the instant nonprovisional application for failure to timely notify the U.S. Patent and Trademark (USPTO) of the filing of an application in a foreign country, or under a multinational treaty that requires publication of applications eighteen months after filing. *See* 37 CFR 1.137(f).

The petition is **GRANTED**.

Petitioner states that the instant nonprovisional application is the subject of an application filed in an eighteen-month publication country on August 18, 2010. However, the USPTO was unintentionally not notified of this filing within 45 days subsequent to the filing of the subject application in an eighteen-month publication country.

In view of the above, this application became abandoned pursuant to 35 U.S.C. § 122(b)(2)(B)(iii) and 37 CFR 1.213(c) for failure to timely notify the Office of the filing of an application in a foreign country or under a multilateral international agreement that requires publication of applications 18 months after filing.

A petition to revive an application abandoned pursuant to 35 U.S.C. 122(b)(2)(B)(iii) for failure to notify the USPTO of a foreign filing must be accompanied by:

(1) the required reply which is met by the notification of such filing in a foreign country or under a multinational treaty;
(2) the petition fee as set forth in 37 CFR 1.17(m); and
(3) a statement that the entire delay in filing the required reply from the due date of the reply until the filing of a grantable petition was unintentional.

The instant petition has been found to be in compliance with 37 CFR 1.137(b). Accordingly, the failure to timely notify the USPTO of a foreign or international filing within 45 days after the date of filing of such foreign or international application as provided by 35 U.S.C. § 122(b)(2)(B)(iii) and 37 CFR 1.213(c) is accepted as having been unintentionally delayed.

The previous Request and Certification under 35 U.S.C. § 122(b)(2)(B)(i) has been rescinded. A Notice Regarding Rescission of Nonpublication Request accompanies this decision on petition.

Telephone inquiries concerning this decision should be directed to Irvin Dingle at (571) 272-3210.

This application is being referred to Technology Center AU 1654 for further processing.

Irvin Dingle
Petition Examiner
Office of Petitions

ATTACHMENT: Notice Regarding Rescission of Nonpublication Request

UNITED STATES PATENT AND TRADEMARK OFFICE

UNITED STATES DEPARTMENT OF COMMERCE
United States Patent and Trademark Office
Address: COMMISSIONER FOR PATENTS
P.O. Box 1450
Alexandria, Virginia 22313-1450
www.uspto.gov

APPLICATION NUMBER	FILING OR 371(C) DATE	FIRST NAMED APPLICANT	ATTY. DOCKET NO./TITLE
12/547,294	08/25/2009	Joseph P. Thornton	119095.010700

CONFIRMATION NO. 5009

29747
GREENBERG TRAURIG (LV)
3773 Howard Hughes Parkway
Suite 400 North
Las Vegas, NV 89169

NONPUBLICATION RESCISSION LETTER

OC000000048414021

Date Mailed: 07/05/2011

Communication Regarding Rescission Of Nonpublication Request and/or Notice of Foreign Filing

Applicant's rescission of the previously-filed nonpublication request and/or notice of foreign filing is acknowledged. The paper has been reflected in the Patent and Trademark Office's (USPTO's) computer records so that the earliest possible projected publication date can be assigned.

The projected publication date is 09/29/2011.

If applicant rescinded the nonpublication request before or on the date of "foreign filing,"[1] then no notice of foreign filing is required.

If applicant foreign filed the application after filing the above application and before filing the rescission, and the rescission did not also include a notice of foreign filing, then a notice of foreign filing (not merely a rescission) is required to be filed within 45 days of the date of foreign filing. See 35 U.S.C. § 122(b)(2)(B)(iii), and Clarification of the United States Patent and Trademark Office's Interpretation of the Provisions of 35 U.S.C. § 122(b)(2)(B)(ii)-(iv), 1272 Off. Gaz. Pat. Office 22 (July 1, 2003).

If a notice of foreign filing is required and is not filed within 45 days of the date of foreign filing, then the application becomes abandoned pursuant to 35 U.S.C. § 122(b)(2)(B)(iii). In this situation, applicant should either file a petition to revive or notify the Office that the application is abandoned. See 37 CFR 1.137(f). Any such petition to revive will be forwarded to the Office of Petitions for a decision. Note that the filing of the petition will not operate to stay any period of reply that may be running against the application.

Questions regarding petitions to revive should be directed to the Office of Petitions at (571) 272-3282.

[1] Note, for purpose of this notice, that "foreign filing" means "filing an application directed to the same invention in another country, or under a multilateral international agreement, that requires publication of applications 18 months after filing".

/idingle/

Office of Data Management, Application Assistance Unit (571) 272-4000, or (571) 272-4200, or 1-888-786-0101

UNITED STATES PATENT AND TRADEMARK OFFICE

Commissioner for Patents
United States Patent and Trademark Office
P.O. Box 1450
Alexandria, VA 22313-1450
www.uspto.gov
DIW Mar-11

INTELLECTUAL PROPERTY GROUP
FREDRIKSON & BYRON, P.A.
200 SOUTH SIXTH STREET, SUITE 4000
MINNEAPOLIS MN 55402

MAILED
MAR 07 2011
OFFICE OF PETITIONS

In re Application of	:
Forsberg, Race, Dolan, Wyler,	: DECISION ON PETITION
and Gehrke	: AND
Application Number: 12/547,300	: DECISION ACCORDING STATUS
Filing Date: 08/25/2009	: UNDER 37 CFR 1.47(a)
Attorney Docket Number:	:
49102.13.2	:

This is in response to the petition under 37 CFR 1.137(b) and the renewed petition under 37 CFR 1.47(a), both filed on December 22, 2010.

The petitions are **GRANTED**.

The application became abandoned on April 11, 2010, for failure to timely file a proper reply to the Notice to File Missing Parts mailed on September 10, 2009, which set a two (2) month shortened statutory period for reply. On Monday, April 12, 2010, a five month extension of time and a reply, including a petition under 37 CFR 1.47(a), was filed. On May 25, 2010, however, a Notice of Abandonment was mailed, stating that the reply filed on April 12, 2010 was insufficient in that it did not include replacement drawings as required. The petition under 37 CFR 1.47(a) was dismissed on June 29, 2010.

On December 22, 2010, the subject petitions were filed, accompanied by replacement drawings.

Petitioners have further shown that a copy of the application was sent to the non-signing inventor, and that the non-signing inventor has refused in writing, via his counsel, to sign and return the declaration.

The above-identified application and papers have been received and found in compliance with 37 CFR 1.47(a). This application is hereby accorded Rule 1.47(a) status.

As provided in Rule 1.47(c), this Office will forward notice of this application's filing to the non-signing inventor at the

address listed in the Application Data Sheet (ADS) filed on April 12, 2010. Notice of the filing of this application will also be published in the *Official Gazette*.

Receipt of the petition fees under § 1.17(g) and (m) are acknowledged. However, the decision on petition mailed on June 29, 2010, set a two (2) month shortened period for reply. Extensions of time were available. As a four (4) month extension of time is required to make the reply filed on December 22, 2010, a timely reply to the Decision mailed on June 29, 2010, the fee (small entity) under § 1.17(a)(4) ($865.00) is due. The petition fee of $200.00 required for the petition under 37 CFR 1.47(a) was originally paid on April 12, 2010. The duplicate petition fee of $200.00 submitted on December 22, 2010 for the petition under 37 CFR 1.47(a) will therefore be applied to the amount due for the extension of time. A total of $665.00 ($865.00 - $200.00) will be charged to counsel's deposit account.

The application is referred to the Office of Patent Application Processing for further processing.

Telephone inquiries related to this decision should be directed to the undersigned at 571-272-3231.

DWood

Douglas I. Wood
Senior Petitions Attorney
Office of Petitions

UNITED STATES PATENT AND TRADEMARK OFFICE

Commissioner for Patents
United States Patent and Trademark Office
P.O. Box 1450
Alexandria, VA 22313-1450
www.uspto.gov

Garry Gehrke
100 Wood St. S.
Jordan MN 55352

MAILED

MAR 07 2011

OFFICE OF PETITIONS

In re Application of
Forsberg et al.
Application No. 12/547,300
Filed: August 25, 2009
For: IMAGED STONE, ROCK, BRICK AND WOOD POLYMERIC LANDSCAPING AND WALL VENEERING PRODUCTS

Dear Mr. Gehrke:

You are named as a joint inventor in the above identified United States patent application, filed under the provisions of 35 U.S.C. 116 (United States Code), and 37 CFR 1.47(a), Rules of Practice in Patent Cases. Should a patent be granted on the application you will be designated therein as a joint inventor.

As a named inventor you are entitled to inspect any paper in the file wrapper of the application, order copies of all or any part thereof (at a prepaid cost per 37 CFR 1.19) or make your position of record in the application. Alternatively, you may arrange to do any of the preceding through a registered patent attorney or agent presenting written authorization from you. If you care to join the application, counsel of record (see below) would presumably assist you. Joining in the application would entail the filing of an appropriate oath or declaration by you pursuant to 37 CFR 1.63.

Telephone inquiries regarding this communication should be directed to the undersigned at 571/272-3231. Requests for information regarding your application should be directed to the File Information Unit at 571-272-3150. Information regarding how to pay for and order a copy of the application, or a specific paper in the application, should be directed to Certification Division at 571-272-3150 or 1-800-972-6382 (outside the Washington D.C. area).

Douglas I. Wood
Senior Petitions Attorney
Office of Petitions

INTELLECTUAL PROPERTY GROUP
FREDRIKSON & BYRON, P.A.
200 SOUTH SIXTH STREET, SUITE 4000
MINNEAPOLIS MN 55402

Doc code : PET.OP.AGE
Description : Petition to make special based on Age/Health

PTO/SB/130 (07-09)
Approved for use through 07/31/2012. OMB 0651- 0031
U.S. Patent and Trademark Office; U.S. DEPARTMENT OF COMMERCE
Under the Paperwork Reduction Act of 1995, no persons are required to respond to a collection of information unless it contains a valid OMB control number

PETITION TO MAKE SPECIAL BASED ON AGE FOR ADVANCEMENT OF EXAMINATION UNDER 37 CFR 1.102(c)(1)

Application Information

Application Number	12/547,305	Confirmation Number	5025	Filing Date	2009-08-25
Attorney Docket Number (optional)	1421-384	Art Unit	1661	Examiner	Anne Marie Grunberg
First Named Inventor	WILLIAM H. EBY				
Title of Invention	SOYBEAN CULTIVAR 8607481				

Attention: Office of Petitions
An application may be made special for advancement of examination upon filing of a petition showing that the applicant is 65 years of age, or more. No fee is required with such a petition. See 37 CFR 1.102(c)(1) and MPEP 708.02 (IV).

APPLICANT HEREBY PETITIONS TO MAKE SPECIAL FOR ADVANCEMENT OF EXAMINATION IN THIS APPLICATION UNDER 37 CFR 1.102(c)(1) and MPEP 708.02 (IV) ON THE BASIS OF THE APPLICANT'S AGE.

A grantable petition requires one of the following items:
(1) Statement by one named inventor in the application that he/she is 65 years of age, or more; or
(2) Certification by a registered attorney/agent having evidence such as a birth certificate, passport, driver's license, etc. showing one named inventor in the application is 65 years of age, or more.

Name of Inventor who is 65 years of age, or older

Given Name	Middle Name	Family Name	Suffix
William	H.	EBY	

A signature of the applicant or representative is required in accordance with 37 CFR 1.33 and 10.18.
Please see 37 CFR 1.4(d) for the format of the signature.

Select (1) or (2) :

○ (1) I am an inventor in this application and I am 65 years of age, or more.

● (2) I am an attorney or agent registered to practice before the Patent and Trademark Office, and I certify that I am in possession of evidence, and will retain such in the application file record, showing that the inventor listed above is 65 years of age, or more.

Signature	/Robert J. Jondle/	Date (YYYY-MM-DD)	2011-05-09
Name	Robert J. Jondle	Registration Number	33915

PTO/SB/130 (07-09)
Approved for use through 07/31/2012. OMB 0651- 0031
U.S. Patent and Trademark Office; U.S. DEPARTMENT OF COMMERCE
Under the Paperwork Reduction Act of 1995, no persons are required to respond to a collection of information unless it contains a valid OMB control number

Privacy Act Statement

The Privacy Act of 1974 (P.L. 93-579) requires that you be given certain information in connection with your submission of the attached form related to a patent application or patent. Accordingly, pursuant to the requirements of the Act, please be advised that: (1) the general authority for the collection of this information is 35 U.S.C. 2(b)(2); (2) furnishing of the information solicited is voluntary; and (3) the principal purpose for which the information is used by the U.S. Patent and Trademark Office is to process and/or examine your submission related to a patent application or patent. If you do not furnish the requested information, the U.S. Patent and Trademark Office may not be able to process and/or examine your submission, which may result in termination of proceedings or abandonment of the application or expiration of the patent.

The information provided by you in this form will be subject to the following routine uses:

1. The information on this form will be treated confidentially to the extent allowed under the Freedom of Information Act (5 U.S.C. 552) and the Privacy Act (5 U.S.C. 552a). Records from this system of records may be disclosed to the Department of Justice to determine whether the Fr eedom of Information Act requires disclosure of these records.

2. A record from this system of records may be disclosed, as a routine use, in the course of presenting evidence to a court, magistrate, or administrative tribunal, including disclosures to opposing counsel in the course of settlement negotiations.

3. A record in this system of records may be disclosed, as a routine use, to a Member of Congress submitting a request involving an individual, to whom the record pertains, when the individual has requested assistance from the Member with respect to the subject matter of the record.

4. A record in this system of records may be disclosed, as a routine use, to a contractor of the Agency having need for the information in order to perform a contract. Recipients of information shall be required to comply with the requirements of the Privacy Act of 1974, as amended, pursuant to 5 U.S.C. 552a(m).

5. A record related to an International Application filed under the Patent Cooperation Treaty in this system of records may be disclosed, as a routine use, to the International Bureau of the World Intellectual Property Organization, pursuant to the Patent Cooperation Treaty.

6. A record in this system of records may be disclosed, as a routine use, to another federal agency for purposes of National Security review (35 U.S.C. 181) and for review pursuant to the Atomic Energy Act (42 U.S.C. 218(c)).

7. A record from this system of records may be disclosed, as a routine use, to the Administrator, General Services, or his/her designee, during an inspection of records conducted by GSA as part of that agency's responsibility to recommend improvements in records management practices and programs, under authority of 44 U.S.C. 2904 and 2906. Such disclosure shall be made in accordance with the GSA regulations governing inspection of records for this purpose, and any other relevant (i.e., GSA or Commerce) directive. Such disclosure shall not be used to make determinations about indivi duals.

8. A record from this system of records may be disclosed, as a routine use, to the public after either publication of the application pursuant to 35 U.S.C. 122(b) or issuance of a patent pursuant to 35 U.S.C. 151. Further, a record may be disclosed, subject to the limitations of 37 CFR 1.14, as a routine use, to the public if the record was filed in an application which became abandoned or in which the proceedings were terminated and which application is referenced by either a published application, an application open to public inspections or an issued patent.

9. A record from this system of records may be disclosed, as a routine use, to a Federal, State, or local law enforcement agency, if the USPTO becomes aware of a violation or potential violation of law or regulation.

UNITED STATES PATENT AND TRADEMARK OFFICE

Commissioner for Patents
United States Patent and Trademark Office
P.O. Box 1450
Alexandria, VA 22313-1450
www.uspto.gov

In re Application of
William H. Eby

Application No. 12547305

Filed: August 25,2009

Attorney Docket No. 1421-384

:DECISION ON PETITION TO MAKE SPECIAL
:UNDER 37 CFR 1.102(c)(1)

This is a decision on the electronic petition under 37 CFR 1.102 (c)(1), filed 09-MAY-2011 to make the above-identified application special based on applicant's age as set forth in MPEP § 708.02, Section IV.

The petition is **GRANTED**.

A grantable petition to make an application special under 37 CFR 1.102(c)(1), MPEP § 708.02, Section IV: Applicant's Age must include a statement by applicant or a registered practitioner having evidence that applicant is at least 65 years of age. No fee is required.

Accordingly, the above-identified application has been accorded "special" status and will be taken up for action by the examiner upon the completion of all pre-examination processing.

Telephone inquiries concerning this electronic decision should be directed to the Electronic Business Center at 866-217-9197.

All other inquiries concerning either the examination or status of the application should be directed to the Technology Center.

UNITED STATES PATENT AND TRADEMARK OFFICE

UNITED STATES DEPARTMENT OF COMMERCE
United States Patent and Trademark Office
Address: COMMISSIONER FOR PATENTS
P.O. Box 1450
Alexandria, Virginia 22313-1450
www.uspto.gov

APPLICATION NO.	FILING DATE	FIRST NAMED INVENTOR	ATTORNEY DOCKET NO.	CONFIRMATION NO.
12/547,305	08/25/2009	William H. Eby	1421-384	5025

32905 7590 11/01/2011
JONDLE & ASSOCIATES, P.C.
858 HAPPY CANYON ROAD, SUITE 230
CASTLE ROCK, CO 80108

EXAMINER
MCELWAIN, ELIZABETH F

ART UNIT	PAPER NUMBER
1638	

NOTIFICATION DATE	DELIVERY MODE
11/01/2011	ELECTRONIC

Please find below and/or attached an Office communication concerning this application or proceeding.

The time period for reply, if any, is set in the attached communication.

Notice of the Office communication was sent electronically on above-indicated "Notification Date" to the following e-mail address(es):

JondleOA@jondlelaw.com

UNITED STATES PATENT AND TRADEMARK OFFICE

Commissioner for Patents
United States Patent and Trademark Office
P.O. Box 1450
Alexandria, VA 22313-1450
www.uspto.gov

JONDLE & ASSOCIATES P.C.
858 HAPPY CANYON ROAD SUITE 230
CASTLE ROCK CO 80108

In re Application of:	:
William H. Eby	:
Serial No.: 12/547,305	: PETITION DECISION
Filed: August 25, 2009	:
Attorney Docket No.: **1421-400**	

This is in response to the petition under 37 CFR § 1.59(b), filed August 8, 2011, to expunge information from the above identified application. This application has not been allowed.

Petitioner requests that the Reply to Request for Information under 37 CFR 1.105, and attachment thereto, submitted to the Patent Office on August 8, 2011, be expunged from the record. Petitioner states either: (A) that the information contains trade secret material, proprietary material and/or material that is subject to a protective order which has not been made public; or (B) that the information submitted was unintentionally submitted and the failure to obtain its return would cause irreparable harm to the party who submitted the information or to the party in interest on whose behalf the information was submitted, and the information has not otherwise been made public. The petition fee set forth in 37 CFR § 1.17(g) has been paid.

This is an examined application which is currently under non-final rejection. As such the information provided has been reviewed, in part, but proceedings in the application have not been terminated. As stated in M.P.E.P. 724, upon allowance or other action closing prosecution in an application, petition may be made for return of Proprietary information. The information cannot be expunged at this time.

The petition is **DISMISSED**. Petitioner may resubmit the petition subsequent to a Notice of Allowability or *ex parte Quayle* action being mailed in the application. No additional petition fee will be required at that time.

Should there be any questions about this decision please contact Marianne C. Seidel by letter addressed to Director, TC 1600, at the address listed above, or by telephone at 571-272-0584 or by facsimile sent to the general Office facsimile number, 571-273-8300.

/MC Seidel/
Marianne C. Seidel, Quality Assurance Specialist
Technology Center 1600

UNITED STATES PATENT AND TRADEMARK OFFICE

UNITED STATES DEPARTMENT OF COMMERCE
United States Patent and Trademark Office
Address: COMMISSIONER FOR PATENTS
P.O. Box 1450
Alexandria, Virginia 22313-1450
www.uspto.gov

APPLICATION NO.	FILING DATE	FIRST NAMED INVENTOR	ATTORNEY DOCKET NO.	CONFIRMATION NO.
12/547,305	08/25/2009	William H. Eby	1421-384	5025

32905 7590 01/09/2012
JONDLE & ASSOCIATES, P.C.
858 HAPPY CANYON ROAD, SUITE 230
CASTLE ROCK, CO 80108

EXAMINER
MCELWAIN, ELIZABETH F

ART UNIT	PAPER NUMBER
1638	

NOTIFICATION DATE	DELIVERY MODE
01/09/2012	ELECTRONIC

Please find below and/or attached an Office communication concerning this application or proceeding.

The time period for reply, if any, is set in the attached communication.

Notice of the Office communication was sent electronically on above-indicated "Notification Date" to the following e-mail address(es):

JondleOA@jondlelaw.com

UNITED STATES PATENT AND TRADEMARK OFFICE

Commissioner for Patents
United States Patent and Trademark Office
P.O. Box 1450
Alexandria, VA 22313-1450
www.uspto.gov

JAN 0 9 2012

JONDLE & ASSOCIATES P.C.
858 HAPPY CANYON ROAD SUITE 230
CASTLE ROCK CO 80108

In re Application of:	:
William H. Eby	: PETITION DECISION
Serial No.: 12/547,305	:
Filed: August 25, 2009	:
Attorney Docket No.: **1421-384**	

This is in response to the renewed petition under 37 CFR § 1.59(b), filed December 13, 2011, to expunge information from the above identified application. This application has been allowed.

Petitioner requests that the material submitted to the Patent Office on August 12, 2011 be expunged from the record. Petitioner states either: (A) that the information contains trade secret material, proprietary material and/or material that is subject to a protective order which has not been made public; or (B) that the information submitted was unintentionally submitted and the failure to obtain its return would cause irreparable harm to the party who submitted the information or to the party in interest on whose behalf the information was submitted, and the information has not otherwise been made public. The petition fee set forth in 37 CFR § 1.17(g) has been paid.

The reasons set forth in this petition establishes to the satisfaction of the Director that expungement of the information is appropriate. The file entry for this document has been closed and as such the document is no longer publicly available, which is the IFW equivalent to removal of a paper document from a paper file wrapper.

Therefore, petitioner's petition is GRANTED.

Should there be any questions about this decision please contact Marianne C. Seidel by letter addressed to Director, TC 1600, at the address listed above, or by telephone at 571-272-0584 or by facsimile sent to the general Office facsimile number, 571-273-8300.

/MC Seidel/
Marianne C. Seidel, Quality Assurance Specialist
Technology Center 1600

PTO/SB/20PCT-KR (06-10)
Approved for use through 01/31/2012. OMB 0651-0058
U.S. Patent and Trademark Office; U. S. DEPARTMENT OF COMMERCE
Under the Paperwork Reduction Act of 1995, no persons are required to respond to a collection of information unless it displays a valid OMB control number.

REQUEST FOR PARTICIPATION IN THE PATENT COOPERATION TREATY - PATENT PROSECUTION HIGHWAY (PCT-PPH) PILOT PROGRAM BETWEEN THE KOREAN INTELLECTUAL PROPERTY OFFICE (KIPO) AND THE USPTO

Application No:	12/547,314	Filing date:	25 August 2009
First Named Inventor:	David K. Stroup		
Title of the Invention:	Finger Swipe Fluid-Transfer Collection Assembly and Method of Using the Same		

THIS REQUEST FOR PARTICIPATION IN THE PCT-PPH PILOT PROGRAM ALONG WITH THE REQUIRED DOCUMENTS MUST BE SUBMITTED VIA EFS-WEB. INFORMATION REGARDING EFS-WEB IS AVAILABLE AT HTTP://WWW.USPTO.GOV/EBC/EFS_HELP.HTML

APPLICANT HEREBY REQUESTS PARTICIPATION IN THE PCT-PPH PROGRAM AND PETITIONS TO MAKE THE ABOVE-IDENTIFIED APPLICATION SPECIAL UNDER THE PCT-PPH PROGRAM.

The above-identified application is (1) a national stage entry of the corresponding PCT application, or (2) a national stage entry of another PCT application which claims priority to the corresponding PCT application, or (3) a national application that claims domestic/ foreign priority to the corresponding PCT application, or (4) a national application which forms the basis for the priority claim in the corresponding PCT application, or (5) a continuing application of a U.S. application that satisfies one of (1) to (4) above, or (6) a U.S. application that claims domestic benefit to a U.S. provisional application which forms the basis for the priority claim in the corresponding PCT application.

The corresponding PCT application number(s) is/are: PCT/US09/54931

The international date of the corresponding PCT application(s) is/are: 25 August 2009

I. List of Required Documents:

a. **A copy of the latest international work product (WO/ISA, WO/IPEA, or IPER) in the above–identified corresponding PCT application(s)**

☐ Is attached.

☒ Is not attached because the document is already in the U.S. application.

b. **A copy of all claims which were indicated as having novelty, inventive step and industrial applicability in the above-identified corresponding PCT application(s).**

☒ Is attached.

☐ Is not attached because the document is already in the U.S. application.

c. **English translations of the documents in a. and b. above are attached (if the documents are not in the English language). A statement that the English translation is accurate is attached for the document in b. above.**

This collection of information is required by 35 U.S.C. 119, 37 CFR 1.55, and 37 CFR 1.102(d). The information is required to obtain or retain a benefit by the public, which is to file (and by the USPTO to process) an application. Confidentiality is governed by 35 U.S.C. 122 and 37 CFR 1.11 and 1.14. This collection is estimated to take 2 hours to complete, including gathering, preparing, and submitting the completed application form to the USPTO. Time will vary depending upon the individual case. Any comments on the amount of time you require to complete this form and/or suggestions for reducing this burden should be sent to the Chief Information Officer, U.S. Patent and Trademark Office, U.S. Department of Commerce, P.O. Box 1450, Alexandria, VA 22313-1450. DO NOT SEND FEES OR COMPLETED FORMS TO THIS ADDRESS.

Approved for use through 01/31/2012. OMB 0651-0058
U.S.Patent and Trademark Office; U.S. DEPARTMENT OF COMMERCE
Under the Paperwork Reduction Act of 1995, no persons are required to respond to a collection of information unless it displays a valid OMB control number.

REQUEST FOR PARTICIPATION IN THE PCT-PPH PILOT PROGRAM BETWEEN THE KIPO AND THE USPTO

(continued)

Application No.:	12/547,314
First Named Inventor:	David K. Stroup

d. **(1) An information disclosure statement listing the documents cited in the international work products (ISR, WO/ISA, WO/IPEA, IPER) of the corresponding PCT application.**

☐ Is attached

☒ Has already been filed in the above-identified U.S. application on 18 May 2010

(2) Copies of all documents (except) for U.S. patents or U.S. patent application publications)

☒ Are attached.

Have already been filed in the above-identified U.S. application on 18 May 2010

II. Claims Correspondence Table:

Claims in US Application	Patentable Claims in the corresponding PCT Application	Explanation regarding the correspondence
1-20	1-20	same claims

III. All the claims in the US application sufficiently correspond to the patentable claims in the corresponding PCT application.

Signature /Stephen C. Beuerle/	Date December 15, 2010
Name (Print/Typed) Stephen C. Beuerle	Registration Number 38,380

Privacy Act Statement

The **Privacy Act of 1974 (P.L. 93-579)** requires that you be given certain information in connection with your submission of the attached form related to a patent application or patent. Accordingly, pursuant to the requirements of the Act, please be advised that: (1) the general authority for the collection of this information is 35 U.S.C. 2(b)(2); (2) furnishing of the information solicited is voluntary; and (3) the principal purpose for which the information is used by the U.S. Patent and Trademark Office is to process and/or examine your submission related to a patent application or patent. If you do not furnish the requested information, the U.S. Patent and Trademark Office may not be able to process and/or examine your submission, which may result in termination of proceedings or abandonment of the application or expiration of the patent.

The information provided by you in this form will be subject to the following routine uses:

1. The information on this form will be treated confidentially to the extent allowed under the Freedom of Information Act (5 U.S.C. 552) and the Privacy Act (5 U.S.C 552a). Records from this system of records may be disclosed to the Department of Justice to determine whether disclosure of these records is required by the Freedom of Information Act.
2. A record from this system of records may be disclosed, as a routine use, in the course of presenting evidence to a court, magistrate, or administrative tribunal, including disclosures to opposing counsel in the course of settlement negotiations.
3. A record in this system of records may be disclosed, as a routine use, to a Member of Congress submitting a request involving an individual, to whom the record pertains, when the individual has requested assistance from the Member with respect to the subject matter of the record.
4. A record in this system of records may be disclosed, as a routine use, to a contractor of the Agency having need for the information in order to perform a contract. Recipients of information shall be required to comply with the requirements of the Privacy Act of 1974, as amended, pursuant to 5 U.S.C. 552a(m).
5. A record related to an International Application filed under the Patent Cooperation Treaty in this system of records may be disclosed, as a routine use, to the International Bureau of the World Intellectual Property Organization, pursuant to the Patent Cooperation Treaty.
6. A record in this system of records may be disclosed, as a routine use, to another federal agency for purposes of National Security review (35 U.S.C. 181) and for review pursuant to the Atomic Energy Act (42 U.S.C. 218(c)).
7. A record from this system of records may be disclosed, as a routine use, to the Administrator, General Services, or his/her designee, during an inspection of records conducted by GSA as part of that agency's responsibility to recommend improvements in records management practices and programs, under authority of 44 U.S.C. 2904 and 2906. Such disclosure shall be made in accordance with the GSA regulations governing inspection of records for this purpose, and any other relevant (*i.e.*, GSA or Commerce) directive. Such disclosure shall not be used to make determinations about individuals.
8. A record from this system of records may be disclosed, as a routine use, to the public after either publication of the application pursuant to 35 U.S.C. 122(b) or issuance of a patent pursuant to 35 U.S.C. 151. Further, a record may be disclosed, subject to the limitations of 37 CFR 1.14, as a routine use, to the public if the record was filed in an application which became abandoned or in which the proceedings were terminated and which application is referenced by either a published application, an application open to public inspection or an issued patent.
9. A record from this system of records may be disclosed, as a routine use, to a Federal, State, or local law enforcement agency, if the USPTO becomes aware of a violation or potential violation of law or regulation.

We claim:

1. A method of using a finger swipe fluid transfer collection assembly, comprising:

providing a finger swipe fluid transfer collection assembly including a base, a test media carried by the base, an inlet for receiving a sample fluid, an outlet, a finger swipe fluid transfer mechanism carried by the base between the inlet and the outlet and including an interior;

swiping the finger swipe fluid transfer mechanism with one 's finger to impart a negative pressure in the interior of the finger swipe fluid transfer mechanism to draw the sample fluid into the interior of the finger swipe fluid transfer mechanism through the inlet;

swiping the finger swipe fluid transfer mechanism again with one 's finger to impart a positive pressure in the interior of the finger swipe fluid transfer mechanism to pump the sample fluid through the outlet and be transferred to the test media.

2. The method of claim 1, wherein the interior of the finger swipe fluid transfer mechanism includes a second fluid, and swiping the finger swipe fluid transfer mechanism with one 's finger imparts a negative pressure in the interior of the finger swipe fluid transfer mechanism to draw the sample fluid into the interior of the finger swipe fluid transfer mechanism through the inlet to mix with the second fluid; and swiping the finger swipe fluid transfer mechanism again with one 's finger impart a positive pressure in the interior of the finger swipe fluid transfer mechanism to pump the mixed sample fluid and second fluid through the outlet and be transferred to the test media.

3. The method of claim 1, wherein the finger swipe fluid transfer mechanism is longitudinally elongated and swiping includes applying pressure to the finger swipe fluid transfer mechanism with one's finger while moving one's finger in an inlet-to-outlet longitudinal direction along the finger swipe fluid transfer mechanism.

4. The method of claim 1, wherein the base is a flat, rectangular, elongated base.

5. The method of claim 1, wherein the inlet and the outlet are checkvalve-less.

6. The method of claim 1, wherein the base includes a vent.

7. The method of claim 1, wherein the base includes a tip.

8. The method of claim 1, wherein the base includes an outer surface and a clear flexible polyethylene top covers the outer surface of the base.

9. The method of claim 8, wherein a portion of the clear flexible polyethylene top forms the finger swipe fluid transfer mechanism.

10. The method of claim 1, wherein the finger swipe fluid transfer collection assembly further includes a sample tube having a proximal end connected to the inlet and a distal end, and the method further includes communicating the distal end of the sample tube with the sample fluid to draw the sample fluid into the interior of the finger swipe fluid transfer mechanism.

11. The method of claim 10, wherein the sample tube is at least one of fixed to the inlet, retractable, not retractable, locked to the inlet, not locked to the inlet, detachably connectable to the inlet.

12. The method of claim 1, wherein the finger swipe fluid transfer collection assembly further includes at least one of a wick, sponge, open-cell foam, porous material, and an absorbent material connected to the inlet, and the method further includes communicating at least one of the wick, sponge, open-cell foam, porous

material, and an absorbent material with the sample fluid to draw the sample fluid into the interior of the finger swipe fluid transfer mechanism.

13. The method of claim 1, wherein the method is an assay test method, the sample fluid includes an analyte of interest for assay testing, the second fluid is a reagent, and the test media visually indicates the presence or absence of an analyte of interest.

14. The method of claim 1, wherein the method is a test method for testing at least one of drug screening, chemical analysis, crime/accident scene investigations, ground water testing (EPA), and livestock testing.

15. The method of claim 1, wherein the sample fluid is a fluid medium of at least one of a gas, a liquid, a suspension, an extracted or dissolved sample, and a supercritical fluid.

16. The method of claim 1, wherein the sample fluid includes a sample including one or more target analytes of interest for detection.

17. The method of claim 16, wherein the one or more target analytes of interest include at least one of antigen, antibody, receptor, ligands chelate, protein, enzyme, nucleic acid, DNA, RNA, pesticide, herbicide, inorganic compond, organic compounds, a material for which a specific binding reagent exists.

18. The method of claim 1, wherein test media indicates at least one of presence, absence, and concentration of one or more analytes.

19. The method of claim 1, wherein the finger swipe fluid transfer collection assembly includes multiple finger swipe fluid transfer mechanisms.

20. A finger swipe fluid transfer collection assembly, comprising:

a base;

a test media carried by the base;

an inlet for receiving a sample fluid;

an outlet;

a finger swipe fluid transfer mechanism carried by the base between the inlet and the outlet and including an interior, the finger swipe fluid transfer mechanism swipeable with one 's finger to impart a negative pressure in the interior of the finger swipe fluid transfer mechanism to draw the sample fluid into the interior of the finger swipe fluid transfer mechanism through the inlet, and swipeable again with one 's finger to impart a positive pressure in the interior of the finger swipe fluid transfer mechanism to pump the sample fluid through the outlet and be transferred to the test media.

UNITED STATES PATENT AND TRADEMARK OFFICE

UNITED STATES DEPARTMENT OF COMMERCE
United States Patent and Trademark Office
Address: COMMISSIONER FOR PATENTS
P.O. Box 1450
Alexandria, Virginia 22313-1450
www.uspto.gov

APPLICATION NO.	FILING DATE	FIRST NAMED INVENTOR	ATTORNEY DOCKET NO.	CONFIRMATION NO.
12/547,314	08/25/2009	David Karl Stroup	115591-004UTL	5039

27189 7590 02/03/2011
PROCOPIO, CORY, HARGREAVES & SAVITCH LLP
525 B STREET
SUITE 2200
SAN DIEGO, CA 92101

EXAMINER
WILLIAMS, HEZRON

ART UNIT	PAPER NUMBER
2856	

NOTIFICATION DATE	DELIVERY MODE
02/03/2011	ELECTRONIC

Please find below and/or attached an Office communication concerning this application or proceeding.

The time period for reply, if any, is set in the attached communication.

Notice of the Office communication was sent electronically on above-indicated "Notification Date" to the following e-mail address(es):

docketing@procopio.com
PTONotifications@procopio.com

UNITED STATES PATENT AND TRADEMARK OFFICE

Commissioner for Patents
United States Patent and Trademark Office
P.O. Box 1450
Alexandria, VA 22313-1450
www.uspto.gov

PROCOPIO, CORY, HARGREAVES & SAVITCH LLP
525 B STREET
SUITE 2200
SAN DIEGO CA 92101

In re Application of
David Karl STROUP
Application No.: 12/547,314
Filed: 25 August 2009
Attorney Docket No.: 115591-004UTL
For: FINGER SWIPE FLUID-TRANSFER COLLECTION ASSEMBLY AND METHOD OF USING THE SAME

: DECISION ON REQUEST TO : PARTICIPATE IN THE PATENT : PROSECUTION HIGHWAY : PROGRAM AND PETITION : TO MAKE SPECIAL UNDER : 37 CFR 1.102(a)

This is a decision on the request to participate in the PCT Patent Prosecution Highway (PCT-PPH) pilot program and the petition under 37 CFR 1.102(a), filed 15 December 2010, to make the above-identified application special.

The request and petition are **GRANTED**.

Discussion

A grantable request to participate in the PCT-PPH pilot program and petition to make special require:

(1) The U.S. application must disclose an eligible relationship to one or more PCT applications where the ISA or IPEA are the JPO, EPO, KIPO, or USPTO;

(2) At least one claim in the PCT application has novelty, inventive step, and industrial applicability and must be free of any observations in Box VIII in the latest work product in the international stage or applicant must identify and explain why the claim(s) is/are not subject to the observation in Box VIII;

(3) Applicant must submit a copy of the claim(s) from the PCT application(s) that have novelty, inventive step, and industrial applicability along with an English translation thereof and a statement that the English translation is accurate, if the claims are not in the English language;

(4) All the claims in the U.S. application must sufficiently correspond or be amended to sufficiently correspond to the claim(s) that have novelty, inventive step, and industrial applicability in the PCT application(s);

(5) Examination of the U.S. application has not begun;

(6) Applicant must submit a copy of the latest international work product from the PCT application indicating that the claim(s) have novelty, inventive step, and industrial applicability along with an English translation thereof and a statement that the English translation is accurate if the latest international work product is not in the English language;

(7) Applicant must submit an IDS listing the documents cited by the PCT examiner in the international work product along with copies of documents except U.S. patents or U.S. patent application publications.

The request to participate in the PCT-PPH pilot program and petition comply with the above requirements. Accordingly, the above-identified application has been accorded "special" status.

Telephone inquiries concerning this decision should be directed to Lee W. Young at 571-272-4549.

All other inquiries concerning the examination or status of the application is accessible in the PAIR system at http://www.uspto.gov/ebc.index.html.

This application will be forwarded to the examiner for action on the merits commensurate with this decision once this application's formality reviews have been completed.

Lee W. Young
TQAS Technology Center 2800 - Semiconductors,
Electrical & Optical Systems & Components

UNITED STATES PATENT AND TRADEMARK OFFICE

Commissioner for Patents
United States Patent and Trademark Office
P.O. Box 1450
Alexandria, VA 22313-1450
www.uspto.gov

PROCOPIO, CORY, HARGREAVES & SAVITCH LLP
525 B STREET
SUITE 2200
SAN DIEGO CA 92101

MAILED
FEB 29 2012
OFFICE OF PETITIONS

In re Application of	:	
Demian Gordon, et al.	:	
Application No. 12/547,378	:	DECISION GRANTING PETITION
Filed: August 25, 2009	:	UNDER 37 CFR 1.313(c)(2)
Attorney Docket No. 113748-5732C1	:	

This is a decision on the petition under 37 CFR 1.313(c)(2), filed, February 28, 2012 to withdraw the above-identified application from issue after payment of the issue fee.

The petition is **GRANTED**.

The above-identified application is withdrawn from issue for consideration of a submission under 37 CFR 1.114 (request for continued examination). *See* 37 CFR 1.313(c)(2).

Petitioner is advised that the issue fee paid on February 22, 2012 cannot be refunded. If, however, this application is again allowed, petitioner may request that it be applied towards the issue fee required by the new Notice of Allowance.[1]

Telephone inquiries should be directed to Terri Johnson at (571) 272-2991.

This application is being referred to Technology Center AU 2624 for processing of the request for continued examination under 37 CFR 1.114 and for consideration of the concurrently filed information disclosure statement.

/Terri Johnson/
Terri Johnson
Petitions Examiner
Office of Petitions

---

[1] *The request to apply the issue fee to the new Notice may be satisfied by completing and returning the new Part B – Fee(s) Transmittal Form (along with any balance due at the time of submission). Petitioner is advised that the Issue Fee Transmittal Form* ***must*** *be completed and timely submitted to avoid abandonment of the application.*

UNITED STATES PATENT AND TRADEMARK OFFICE

Commissioner for Patents
United States Patent and Trademark Office
P.O. Box 1450
Alexandria, VA 22313-1450
www.uspto.gov

Paper No.

LIFE TECHNOLOGIES CORPORATION
C/O INTELLEVATE
P.O. BOX 52050
MINNEAPOLIS MN 55402

MAILED
DEC 03 2010
OFFICE OF PETITIONS

In re Application of	:	
Bryning	:	
Application No. 12/547,379	:	DECISION ON PETITION
Filing Date: August 25, 2009	:	UNDER 37 C.F.R. § 1.78(A)(3)
Attorney Docket No.: 5047 D1	:	
Title: EMULSIONS OF IONIC	:	
LIQUIDS	:	

This is a decision on the petition pursuant to 37 C.F.R. § 1.78(a)(3), filed September 16, 2010 to accept an unintentionally delayed claim under 35 U.S.C. § 120 for the benefit of priority to the prior-filed nonprovisional application set forth in the Supplemental Application Data Sheet (ADS) filed concurrently with this petition.

The petition is **DISMISSED**.

A petition for acceptance of a claim for late priority under 37 C.F.R. § 1.78(a)(3) is only applicable to those applications filed on or after November 29, 2000. Further, the petition is appropriate only after the expiration of the period specified in 37 C.F.R. 1.78(a)(2)(ii). In addition, the petition under 37 C.F.R. 1.78(a)(3) must be accompanied by:

(1) the reference required by 35 U.S.C. § 120 and 37 C.F.R. § 1.78(a)(2)(i) of the prior-filed application, unless previously submitted;
(2) the surcharge set forth in § 1.17(t); and
(3) a statement that the entire delay between the date the claim was due under 37 C.F.R. 1.78(a)(2)(ii) and the date the claim was filed was unintentional. The Director may require additional information where there is a question

whether the delay was unintentional.

37 C.F.R. § 1.78(a)(3)(iii) requires a statement that the entire delay between the date the claim was due under paragraph (a)(2)(ii) of 37 C.F.R. § 1.78 and the date the claim was filed was unintentional. Since the statement contained in this petition varies from the language required by 37 C.F.R. § 1.78(a)(3)(iii), the statement contained in this petition is being construed as the statement required by 37 C.F.R. § 1.78(a)(3)(iii), and Petitioner must notify the Office if this is not a correct interpretation of the statement contained in this petition.

Requirements (2) and (3) above have been satisfied. The petition does not satisfy item (1) above.

Pursuant to Rule 1.78(a)(2)(iii), the required reference must be included in an application data sheet, or the specification must contain or be amended to contain such reference in the first sentence(s) following the title. Consequently, Petitioner has submitted an executed supplemental ADS with the present petition, so as to present the required reference.

The supplemental ADS that was submitted concurrently with this petition cannot be entered, as it has not been properly titled.[1] Pursuant to 37 C.F.R. § 1.76(c)(2), "[s]upplemental application data sheets…[m]ust be titled "Supplemental Application Data Sheet."

Moreover, Petitioner will note that this application (12/547,379, filed on August 25, 2009) is not co-pending with application no. 10/444,848, which issued on August 11, 2009.

Any reply should include a cover letter entitled "Renewed Petition pursuant to 37 C.F.R. § 1.78(a)(3)," **and should include an executed supplemental ADS that is properly titled.** This is not a final agency action within the meaning of 5 U.S.C § 704.

Any renewed petition should indicate in a prominent manner that the attorney handling this matter is Paul Shanoski, and may be submitted by mail,[2] hand-delivery,[3] or facsimile.[4] Registered

---

1 The word "supplemental" does not appear in the title; instead, the submission has been titled "CORRECTED (emphasis included) Application Data Sheet 37 CFR 1.76."
2 Mail Stop Petition, Commissioner for Patents, United States Patent and Trademark Office, P.O. Box 1450, Alexandria, VA, 22313-1450.

users of EFS-Web may alternatively submit a response to this decision via EFS-Web.[5]

If responding by mail, Petitioner is advised not to place the undersigned's name on the envelope.. Only the information that appears in the footnote should be included - adding anything else to the address will delay the delivery of the response to the deciding official.

It is noted that the address listed on the petition differs from the address of record. The application file does not indicate a change of correspondence address has been filed in this case, although the address given on the petition differs from the address of record. If Petitioner desires to receive future correspondence regarding this application, the change of correspondence address must be submitted. A courtesy copy of this decision will be mailed to Petitioner. However, all future correspondence will be directed to the address of record until such time as appropriate instructions are received to the contrary. Petitioner will not receive future correspondence related to this application unless Change of Correspondence Address, Patent Form (PTO/SB/122) is submitted for the above-identified application. For Petitioner's convenience, a blank Change of Correspondence Address, Patent Form (PTO/SB/122), may be found at http://www.uspto.gov/web/forms/sb0122.pdf.

It is not apparent whether the person signing the statement of unintentional delay was in a position to have firsthand or direct knowledge of the facts and circumstances of the delay at issue. Nevertheless, such statement is being treated as having been made as the result of a reasonable inquiry into the facts and circumstances of such delay.[6] In the event that such an inquiry has not been made, Petitioner must make such an inquiry. If such inquiry results in the discovery that the delay was intentional, Petitioner must notify the Office.

Telephone inquiries regarding *this decision* should be directed to Senior Attorney Paul Shanoski at (571) 272-3225.[7] All other

---

3 Customer Window, Randolph Building, 401 Dulaney Street, Alexandria, VA, 22314.
4 (571) 273-8300: please note this is a central facsimile number.
5 https://sportal.uspto.gov/authenticate/authenticateuserlocalepf.html
6 See 37 C.F.R. § 10.18(b); cf. Changes to Patent Practice and Procedure; Final Rule Notice, 62 Fed. Reg. 53131, 53178 (October 10, 1997), 1203 Off. Gaz. Pat. Office 63, 103 (October 21, 1997).
7 Petitioner will note that all practice before the Office should be in writing, and the action of the Office will be based exclusively on the written

inquiries concerning examination procedures should be directed to the Technology Center.

Chris Bottorff
Supervisor
Office of Petitions

cc: Applied Biosystems, LLC
5781 Van Allen Way
Carlsbad, CA 92008

record in the Office. See 37 C.F.R. § 1.2. As such, Petitioner is reminded that no telephone discussion may be controlling or considered authority for any further action(s) of Petitioner.

UNITED STATES PATENT AND TRADEMARK OFFICE

Commissioner for Patents
United States Patent and Trademark Office
P.O. Box 1450
Alexandria, VA 22313-1450
www.uspto.gov

Paper No.

LIFE TECHNOLOGIES CORPORATION
C/O INTELLEVATE
P.O. BOX 52050
MINNEAPOLIS MN 55402

MAILED
JAN 31 2011
OFFICE OF PETITIONS

In re Application of	:	
Bryning	:	
Application No. 12/547,379	:	DECISION ON RENEWED PETITION
Filing Date: August 25, 2009	:	UNDER 37 C.F.R. § 1.78(A)(3)
Attorney Docket No.: 5047 D1	:	
Title: EMULSIONS OF IONIC	:	
LIQUIDS	:	

This is a decision on the renewed petition pursuant to 37 C.F.R. § 1.78(a)(3), filed December 14, 2010 to accept an unintentionally delayed claim under 35 U.S.C. § 120 for the benefit of priority to the prior-filed nonprovisional application set forth in both a Supplemental Application Data Sheet (ADS) and an amendment to the specification, both filed concurrently with this renewed petition.

The renewed petition is **DISMISSED**.

An original petition pursuant to 37 C.F.R. § 1.78(a)(3) was filed on September 16, 2010.

A petition for acceptance of a claim for late priority under 37 C.F.R. § 1.78(a)(3) is only applicable to those applications filed on or after November 29, 2000. Further, the petition is appropriate only after the expiration of the period specified in 37 C.F.R. 1.78(a)(2)(ii). In addition, the petition under 37 C.F.R. 1.78(a)(3) must be accompanied by:

(1) the reference required by 35 U.S.C. § 120 and 37 C.F.R. § 1.78(a)(2)(i) of the prior-filed application, unless previously submitted;
(2) the surcharge set forth in § 1.17(t); and

(3) a statement that the entire delay between the date the claim was due under 37 C.F.R. 1.78(a)(2)(ii) and the date the claim was filed was unintentional. The Director may require additional information where there is a question whether the delay was unintentional.

37 C.F.R. § 1.78(a)(3)(iii) requires a statement that the entire delay between the date the claim was due under paragraph (a)(2)(ii) of 37 C.F.R. § 1.78 and the date the claim was filed was unintentional. Since the statements contained in both the original petition and this renewed petition vary from the language required by 37 C.F.R. § 1.78(a)(3)(iii), the statements contained in these two petitions are being construed as the statement required by 37 C.F.R. § 1.78(a)(3)(iii), and Petitioner must notify the Office if this is not a correct interpretation of the statements contained in these two petitions.

The original petition was dismissed via the mailing of a decision on December 3, 2010, which indicated that requirements (2) and (3) of Rule 1.78(a)(3) have been satisfied, and that the original petition does not satisfy item (1) above.

Pursuant to Rule 1.78(a)(2)(iii), the required reference must be included in an application data sheet, or the specification must contain or be amended to contain such reference in the first sentence(s) following the title. Consequently, with this renewed petition, Petitioner has submitted a Supplemental ADS that has been properly titled as such. It is noted that the Supplemental ADS contains an acceptable benefit claim.

However, Petitioner has also submitted an amendment to the specification, and this amendment *is contained on the second page of this petition:* put another way, this amendment is contained within the text of the petition, as opposed to having been submitted as a separate paper. It follows that this amendment to the specification cannot be entered since it fails to comply with 37 C.F.R. § 1.4(c), which sets forth, in toto:

> Since different matters may be considered by different branches or sections of the United States Patent and Trademark Office, each distinct subject, inquiry or order must be contained in a separate paper to avoid confusion and delay in answering papers dealing with different subjects.

Any reply should include a cover letter entitled "Second Renewed Petition pursuant to 37 C.F.R. § 1.78(a)(3)," and should include an amendment to the specification that is in compliance with 37

C.F.R. § 1.4(c). This is not a final agency action within the meaning of 5 U.S.C § 704.

Any second renewed petition should indicate in a prominent manner that the attorney handling this matter is Paul Shanoski, and may be submitted by mail,[1] hand-delivery,[2] or facsimile.[3] Registered users of EFS-Web may alternatively submit a response to this decision via EFS-Web.[4]

If responding by mail, Petitioner is advised not to place the undersigned's name on the envelope. Only the information that appears in the footnote should be included - adding anything else to the address will delay the delivery of the response to the deciding official.

It is noted that the address listed on the petition differs from the address of record. The application file does not indicate a change of correspondence address has been filed in this case, although the address given on the petition differs from the address of record. If Petitioner desires to receive future correspondence regarding this application, the change of correspondence address must be submitted. A courtesy copy of this decision will be mailed to Petitioner. However, all future correspondence will be directed to the address of record until such time as appropriate instructions are received to the contrary. Petitioner will not receive future correspondence related to this application unless Change of Correspondence Address, Patent Form (PTO/SB/122) is submitted for the above-identified application. For Petitioner's convenience, a blank Change of Correspondence Address, Patent Form (PTO/SB/122), may be found at http://www.uspto.gov/web/forms/sb0122.pdf.

It is not apparent whether the person signing the statement of unintentional delay was in a position to have firsthand or direct knowledge of the facts and circumstances of the delay at issue. Nevertheless, such statement is being treated as having been made as the result of a reasonable inquiry into the facts and circumstances of such delay.[5] In the event that such an inquiry

---

1 Mail Stop Petition, Commissioner for Patents, United States Patent and Trademark Office, P.O. Box 1450, Alexandria, VA, 22313-1450.
2 Customer Window, Randolph Building, 401 Dulaney Street, Alexandria, VA, 22314.
3 (571) 273-8300: please note this is a central facsimile number.
4 https://sportal.uspto.gov/authenticate/authenticateuserlocalepf.html
5 See 37 C.F.R. § 10.18(b); cf. Changes to Patent Practice and Procedure; Final Rule Notice, 62 Fed. Reg. 53131, 53178 (October 10, 1997), 1203 Off. Gaz. Pat. Office 63, 103 (October 21, 1997).

has not been made, Petitioner must make such an inquiry. If such inquiry results in the discovery that the delay was intentional, Petitioner must notify the Office.

Telephone inquiries regarding *this decision* should be directed to Senior Attorney Paul Shanoski at (571) 272-3225.[6] All other inquiries concerning examination procedures should be directed to the Technology Center.

Chris Bottorff
Supervisor
Office of Petitions

cc: Applied Biosystems, LLC
5781 Van Allen Way
Carlsbad, CA 92008

6 Petitioner will note that all practice before the Office should be in writing, and the action of the Office will be based exclusively on the written record in the Office. See 37 C.F.R. § 1.2. As such, Petitioner is reminded that no telephone discussion may be controlling or considered authority for any further action(s) of Petitioner.

UNITED STATES PATENT AND TRADEMARK OFFICE

Commissioner for Patents
United States Patent and Trademark Office
P.O. Box 1450
Alexandria, VA 22313-1450
www.uspto.gov

Paper No.

LIFE TECHNOLOGIES CORPORATION
C/O INTELLEVATE
P.O. BOX 52050
MINNEAPOLIS MN 55402

MAILED
APR 27 2011
OFFICE OF PETITIONS

In re Application of	:	
Bryning	:	
Application No. 12/547,379	:	DECISION ON SECOND RENEWED
Filing Date: August 25, 2009	:	PETITION UNDER 37 C.F.R.
Attorney Docket No.: 5047 D1	:	§ 1.78(A)(3)
Title: EMULSIONS OF IONIC	:	
LIQUIDS	:	

This is a decision on the second renewed petition pursuant to 37 C.F.R. § 1.78(a)(3), filed March 16, 2011 to accept an unintentionally delayed claim under 35 U.S.C. § 120 for the benefit of priority to the prior-filed nonprovisional application set forth in both a Supplemental Application Data Sheet (ADS) and an amendment to the specification, each filed concurrently with this second renewed petition.

The second renewed petition is **GRANTED**.

A petition for acceptance of a claim for late priority under 37 C.F.R. § 1.78(a)(3) is only applicable to those applications filed on or after November 29, 2000. Further, the petition is appropriate only after the expiration of the period specified in 37 C.F.R. 1.78(a)(2)(ii). In addition, the petition under 37 C.F.R. 1.78(a)(3) must be accompanied by:

(1) the reference required by 35 U.S.C. § 120 and 37 C.F.R. § 1.78(a)(2)(i) of the prior-filed application, unless previously submitted;
(2) the surcharge set forth in § 1.17(t); and
(3) a statement that the entire delay between the date the claim was due under 37 C.F.R. 1.78(a)(2)(ii) and the date

> the claim was filed was unintentional. The Director may require additional information where there is a question whether the delay was unintentional.

37 C.F.R. § 1.78(a)(3)(iii) requires a statement that the entire delay between the date the claim was due under paragraph (a)(2)(ii) of 37 C.F.R. § 1.78 and the date the claim was filed was unintentional. Since the statements contained in the original petition, the renewed petition, and this second renewed petition vary from the language required by 37 C.F.R. § 1.78(a)(3)(iii), the statements contained in these three petitions are being construed as the statement required by 37 C.F.R. § 1.78(a)(3)(iii), and Petitioner must notify the Office if this is not a correct interpretation of the statements contained in these three petitions.

An original petition pursuant to 37 C.F.R. § 1.78(a)(3) was filed on September 16, 2010, and was dismissed via the mailing of a decision on December 3, 2010, which indicated that requirements (2) and (3) of Rule 1.78(a)(3) have been satisfied, and that the original petition does not satisfy item (1) above.

A renewed petition pursuant to 37 C.F.R. § 1.78(a)(3) was filed on December 14, 2010, and was dismissed via the mailing of a decision on January 31, 2011, which indicated that Petitioner included both a Supplemental Application Data Sheet (ADS) and an amendment to the specification, however the latter could not be entered.

With this second renewed petition, Petitioner has asserted that the decision on the renewed petition "acknowledged that the renewed petition satisfied all three requirements of Rule 1.78(a)(3)." This statement is inaccurate, as the decision on the renewed petition did not indicate that the first requirement of Rule 1.78(a)(3) had been satisfied.

With this second renewed petition, Petitioner has further included a Supplemental Application Data Sheet (ADS) and an amendment to the specification, and each has been entered and made of record. It follows that the first requirement of Rule 1.78(a)(3) has been satisfied.

All of the above requirements having been satisfied, the late claim for priority pursuant to 35 U.S.C. § 120 is accepted as being unintentionally delayed.

The granting of this petition to accept the delayed benefit claim to the prior-filed application pursuant to 37 C.F.R. § 1.78(a)(3) should not be construed as meaning that this application is entitled to the benefit of the prior-filed application. In order for this application to be entitled to the benefit of the prior-filed application, all other requirements under 35 U.S.C. § 120 and 37 C.F.R. §§ 1.78(a)(1) and (a)(2) must be met. Similarly, the fact that the corrected Filing Receipt accompanying this decision on petition includes the prior-filed application should not be construed as meaning that Applicant is entitled to the claim for benefit of priority to the prior-filed application noted thereon. Accordingly, the Examiner will, in due course, consider this benefit claim and determine whether the application is entitled to the benefit of the earlier filing date.

A corrected Filing Receipt, which includes the priority claim to the prior-filed nonprovisional application, accompanies this decision on petition.

It is noted that Petitioner has submitted the petition fee on three occasions: September 16, 2010, December 14, 2010, and March 16, 2011. Accordingly, since the $ 1,410 double and triple payments are unnecessary, they will be credited to Deposit Account No. 50-3994 in due course.

Technology Center Art Unit 1759 will be made aware of this decision, so that the Examiner may consider Applicant's entitlement to claim benefit of priority under 35 U.S.C. § 120 to the prior-filed application.

Telephone inquiries regarding this decision should be directed to Senior Attorney Paul Shanoski at (571) 272-3225.[1]

Anthony Knight
Director
Office of Petitions

Encl. Corrected Filing Receipt

---

1 Petitioner will note that all practice before the Office should be in writing, and the action of the Office will be based exclusively on the written record in the Office. See 37 C.F.R. § 1.2. As such, Petitioner is reminded that no telephone discussion may be controlling or considered authority for any further action(s) of Petitioner.

UNITED STATES PATENT AND TRADEMARK OFFICE

UNITED STATES DEPARTMENT OF COMMERCE
United States Patent and Trademark Office
Address: COMMISSIONER FOR PATENTS
P.O. Box 1450
Alexandria, Virginia 22313-1450
www.uspto.gov

APPLICATION NUMBER	FILING or 371(c) DATE	GRP ART UNIT	FIL FEE REC'D	ATTY.DOCKET.NO	TOT CLAIMS	IND CLAIMS
12/547,379	08/25/2009	1759	1090	5047 D1	10	1

CONFIRMATION NO. 5171

CORRECTED FILING RECEIPT

52059
LIFE TECHNOLOGIES CORPORATION
C/O INTELLEVATE
P.O. BOX 52050
MINNEAPOLIS, MN 55402

OC000000047199406

Date Mailed: 04/26/2011

Receipt is acknowledged of this non-provisional patent application. The application will be taken up for examination in due course. Applicant will be notified as to the results of the examination. Any correspondence concerning the application must include the following identification information: the U.S. APPLICATION NUMBER, FILING DATE, NAME OF APPLICANT, and TITLE OF INVENTION. Fees transmitted by check or draft are subject to collection. Please verify the accuracy of the data presented on this receipt. **If an error is noted on this Filing Receipt, please submit a written request for a Filing Receipt Correction. Please provide a copy of this Filing Receipt with the changes noted thereon. If you received a "Notice to File Missing Parts" for this application, please submit any corrections to this Filing Receipt with your reply to the Notice. When the USPTO processes the reply to the Notice, the USPTO will generate another Filing Receipt incorporating the requested corrections**

Applicant(s)
Zbigniew T. Bryning, Campbell, CA;

Assignment For Published Patent Application
LIFE TECHNOLOGIES CORPORATION, Carlsbad, CA

Power of Attorney: The patent practitioners associated with Customer Number 52059

Domestic Priority data as claimed by applicant
This application is a DIV of 10/853,911 05/25/2004 PAT 7,578,916
and is a CIP of 12/538,763 08/10/2009 ABN
which is a CON of 10/444,848 05/23/2003 PAT 7,572,409

Foreign Applications (You may be eligible to benefit from the **Patent Prosecution Highway** program at the USPTO. Please see http://www.uspto.gov for more information.)

If Required, Foreign Filing License Granted: 09/04/2009

The country code and number of your priority application, to be used for filing abroad under the Paris Convention, is **US 12/547,379**

Projected Publication Date: Not Applicable

Non-Publication Request: No

Early Publication Request: No

Title

Emulsions of Ionic Liquids

Preliminary Class

204

PROTECTING YOUR INVENTION OUTSIDE THE UNITED STATES

Since the rights granted by a U.S. patent extend only throughout the territory of the United States and have no effect in a foreign country, an inventor who wishes patent protection in another country must apply for a patent in a specific country or in regional patent offices. Applicants may wish to consider the filing of an international application under the Patent Cooperation Treaty (PCT). An international (PCT) application generally has the same effect as a regular national patent application in each PCT-member country. The PCT process **simplifies** the filing of patent applications on the same invention in member countries, but **does not result** in a grant of "an international patent" and does not eliminate the need of applicants to file additional documents and fees in countries where patent protection is desired.

Almost every country has its own patent law, and a person desiring a patent in a particular country must make an application for patent in that country in accordance with its particular laws. Since the laws of many countries differ in various respects from the patent law of the United States, applicants are advised to seek guidance from specific foreign countries to ensure that patent rights are not lost prematurely.

Applicants also are advised that in the case of inventions made in the United States, the Director of the USPTO must issue a license before applicants can apply for a patent in a foreign country. The filing of a U.S. patent application serves as a request for a foreign filing license. The application's filing receipt contains further information and guidance as to the status of applicant's license for foreign filing.

Applicants may wish to consult the USPTO booklet, "General Information Concerning Patents" (specifically, the section entitled "Treaties and Foreign Patents") for more information on timeframes and deadlines for filing foreign patent applications. The guide is available either by contacting the USPTO Contact Center at 800-786-9199, or it can be viewed on the USPTO website at http://www.uspto.gov/web/offices/pac/doc/general/index.html.

For information on preventing theft of your intellectual property (patents, trademarks and copyrights), you may wish to consult the U.S. Government website, http://www.stopfakes.gov. Part of a Department of Commerce initiative, this website includes self-help "toolkits" giving innovators guidance on how to protect intellectual property in specific countries such as China, Korea and Mexico. For questions regarding patent enforcement issues, applicants may call the U.S. Government hotline at 1-866-999-HALT (1-866-999-4158).

LICENSE FOR FOREIGN FILING UNDER

Title 35, United States Code, Section 184

Title 37, Code of Federal Regulations, 5.11 & 5.15

GRANTED

The applicant has been granted a license under 35 U.S.C. 184, if the phrase "IF REQUIRED, FOREIGN FILING LICENSE GRANTED" followed by a date appears on this form. Such licenses are issued in all applications where the conditions for issuance of a license have been met, regardless of whether or not a license may be required as

set forth in 37 CFR 5.15. The scope and limitations of this license are set forth in 37 CFR 5.15(a) unless an earlier license has been issued under 37 CFR 5.15(b). The license is subject to revocation upon written notification. The date indicated is the effective date of the license, unless an earlier license of similar scope has been granted under 37 CFR 5.13 or 5.14.

This license is to be retained by the licensee and may be used at any time on or after the effective date thereof unless it is revoked. This license is automatically transferred to any related applications(s) filed under 37 CFR 1.53(d). This license is not retroactive.

The grant of a license does not in any way lessen the responsibility of a licensee for the security of the subject matter as imposed by any Government contract or the provisions of existing laws relating to espionage and the national security or the export of technical data. Licensees should apprise themselves of current regulations especially with respect to certain countries, of other agencies, particularly the Office of Defense Trade Controls, Department of State (with respect to Arms, Munitions and Implements of War (22 CFR 121-128)); the Bureau of Industry and Security, Department of Commerce (15 CFR parts 730-774); the Office of Foreign AssetsControl, Department of Treasury (31 CFR Parts 500+) and the Department of Energy.

NOT GRANTED

No license under 35 U.S.C. 184 has been granted at this time, if the phrase "IF REQUIRED, FOREIGN FILING LICENSE GRANTED" DOES NOT appear on this form. Applicant may still petition for a license under 37 CFR 5.12, if a license is desired before the expiration of 6 months from the filing date of the application. If 6 months has lapsed from the filing date of this application and the licensee has not received any indication of a secrecy order under 35 U.S.C. 181, the licensee may foreign file the application pursuant to 37 CFR 5.15(b).

UNITED STATES PATENT AND TRADEMARK OFFICE

Commissioner for Patents
United States Patent and Trademark Office
P.O. Box 1450
Alexandria, VA 22313-1450
www.uspto.gov

QUALCOMM INCORPORATED
5775 MOREHOUSE DR.
SAN DIEGO, CA 92121

MAILED
FEB 03 2012
OFFICE OF PETITIONS

In re Application of :
Michael-David N. Canoy :
Application No.: 12/547,424 :
Filed: August 25, 2009 :
Attorney Docket No.: 071136 :

ON PETITION

This is a decision on the petition, filed February 2, 2012, under 37 CFR 1.313(c)(2) to withdraw the above-identified application from issue after payment of the issue fee.

The petition is **GRANTED**.

The above-identified application is withdrawn from issue for consideration of a submission under 37 CFR 1.114 (request for continued examination). See 37 CFR 1.313(c)(2).

Petitioner is advised that the issue fee paid on January 31, 2012, cannot be refunded. If, however, this application is again allowed, petitioner may request that it be applied towards the issue fee required by the new Notice of Allowance.[1]

Telephone inquiries relating to this decision should be directed to the undersigned at (571) 272-3204.

The application is being referred to Technology Center AU 3662 for further processing of the request for continued examination and for consideration of the concurrently filed Information Disclosure Statement (IDS).

/SDB/

Sherry D. Brinkley
Petitions Examiner
Office of Petitions

[1] *The request to apply the issue fee to the new Notice may be satisfied by completing and returning the new Part B – Fee(s) Transmittal Form (along with any balance due at the time of submission). Petitioner is advised that the Issue Fee Transmittal Form* ***must*** *be completed and timely submitted to avoid abandonment of the application.*

UNITED STATES PATENT AND TRADEMARK OFFICE

Commissioner for Patents
United States Patent and Trademark Office
P.O. Box 1450
Alexandria, VA 22313-1450
www.uspto.gov

Mauriel Kapouytian & Treffert LLP
151 1st Avenue
#23
New York NY 10003

MAILED
NOV 08 2010
OFFICE OF PETITIONS

In re Application of	:	
Joshua Attenberg et al.	:	DECISION ON PETITION
Application No. 12/547,473	:	TO WITHDRAW
Filed: August 25, 2009	:	FROM RECORD
Attorney Docket No. **10033-2007000**	:	

This is a decision on the request to withdraw as attorney of record under 37 CFR § 1.36(b), filed September 22, 2010.

The request is **NOT APPROVED**.

The request cannot be approved because it lacks the name of the first inventor or the assignee of record that is associated with the address listed in the request. Therefore, the change of correspondence address is considered improper.

The Office will only accept correspondence address changes to the most current address information provided for the assignee of the entire interest *who properly became of record under 37 CFR 3.71,* or, if no assignee of the entire interest has properly been made of record, the most current address information provided for the first named inventor. 37 CFR 3.71(c) states:

> *An assignee becomes of record either in a national patent application or a reexamination proceeding by filing a statement in compliance with § 3.73(b) that is signed by a party who is authorized to act on behalf of the assignee.*

The assignee must establish its ownership of the patent to the satisfaction of the Director. In this regard, the statement under 37 CFR 3.73(b) must have either: (i) documentary evidence of a chain of title from the original owner to the assignee (*e.g.*, copy of an executed assignment), and a statement affirming that the documentary evidence of the chain of title from the original owner to the assignee was or concurrently is being submitted for recordation pursuant to § 3.11; or (ii) a statement specifying where documentary evidence of a chain of title from the original owner to the assignee is recorded in the assignment records of the Office (*e.g.*, reel and frame number).

All future communications from the Office will continue to be directed to the above-listed address until otherwise notified by applicant.

Telephone inquires concerning this decision should be directed to the undersigned at (571) 272-4584.

/JoAnne Burke/
JoAnne Burke
Petitions Examiner
Office of Petitions

UNITED STATES PATENT AND TRADEMARK OFFICE

COMMISSIONER FOR PATENTS
UNITED STATES PATENT AND TRADEMARK OFFICE
P.O. BOX 1450
ALEXANDRIA, VA 22313-1450 www.uspto.gov

COLOPLAST A/S
Attention: Corporate Patents
Holtedam 1
DK-3050 Humlebaek
DENMARK

MAILED
AUG 17 2011
PCT LEGAL ADMINISTRATION

In re Application of SUSLIAN et al. Application No.: 12/547,499 Attorney Docket No.: 2000426-US3 For: METHOD FOR TREATING URINARY INCONTINENCE IN WOMEN AND IMPLANTABLE DEVICE INTENDED TO CORRECT URINARY INCONTINENCE	: : : : : : : : :	DECISION ON PETITION UNDER 37 CFR 1.78(a)(3)

This decision is in response to applicants' "PETITION FOR AN UNINTENTIONALLY DELAYED CLAIM OF PRIORITY" filed in the United States Patent and Trademark Office (USPTO) on January 28, 2011, which has properly been treated under 37 CFR 1.78(a)(3).

This is a decision on the petition under 37 CFR 1.78(a)(3), filed January 28, 2011, to accept an unintentionally delayed claim under 35 U.S.C. § 120 for the benefit of priority to the prior-filed nonprovisional application and to accept an unintentionally delayed claim under 35 U.S.C. §§ 120 and 365(c) for the benefit of priority to the prior-filed international application (PCT/FR01/02120) set forth in the amendment filed concurrently with the instant petition.

The petition is **DISMISSED**.

The present nonprovisional application was filed after November 29, 2000, and the claim herein for the benefit of priority to the prior-filed nonprovisional applications is submitted after expiration of the period specified in 37 CFR 1.78(a)(2)(ii). Therefore, this is a proper petition under 37 CFR 1.78(a)(3).

A petition for acceptance of a claim for late priority under 37 CFR 1.78(a)(3) is only applicable to those applications filed on or after November 29, 2000. Further, the petition is appropriate only after the expiration of the period specified in 37 CFR 1.78(a)(2)(ii). In addition, the petition under 37 CFR 1.78(a)(3) must be accompanied by:

(1) the reference required by 35 U.S.C. § 120 and 37 CFR 1.78(a)(2)(i) of the prior-filed application(s), unless previously submitted;

(2) the surcharge set forth in § 1.17(t); and
(3) a statement that the entire delay between the date the claim was due under 37 CFR 1.78(a)(2)(ii) and the date the claim was filed was unintentional. The Commissioner may require additional information where there is a question whether the delay was unintentional.

The petition does not comply with item (1) above.
The benefit claim to U.S. Application No. 09/661,620 filed September 14, 2000 is not proper because U.S. Application No. 10/455,465 does not contain the reference required by 37 CFR 1.78(a)(2) to U.S. Application No. 09/661,620.

As set forth in MPEP 201.11, Section III C, sometimes a pending application is one of a series of applications wherein the pending application is not copending with the first filed application but is copending with an intermediate application entitled to the benefit of the filing date of the first application. Appropriate references must be made in each intermediate application in the chain of prior applications. If an applicant desires, for example, the following benefit claim: "this application is a continuation of Application No. C, filed ---, which is a continuation of Application No. B, filed ---, which claims the benefit of provisional Application No. A, filed ---," then Application No. C must have a reference to Application No. B and provisional Application No. A, and Application No. B must have a reference to provisional Application No. A.

U.S. Application No. 10/455,465 states that it is a Continuation-in-part of U.S. Application No. 09/661,620. However, the two applications are not copending. U.S. Application No. 10/455,465 was filed on June 4, 2003 while U.S. application No. 09/661,620 went abandoned on March 22, 2002.

Accordingly, before the petition under 37 CFR 1.78(a)(3) can be granted, amendment of U.S. Application No. 10/455,465 to specify the correct relationships between the prior applications set forth in the initial sentences of that application, and a renewed petition under 37 CFR 1.78(a)(3) in the instant application are required. The petition fee has been paid.

Any further correspondence with respect to this matter may be filed electronically via EFS-Web selecting the document description "Petition for review and processing by the PCT Legal Office" or by mail addressed to Mail Stop PCT, Commissioner for Patents, Office of PCT Legal Administration, P.O. Box 1450, Alexandria, Virginia 22313-1450, with the contents of the letter marked to the attention of the Office of PCT Legal Administration.

/Daniel Stemmer/

Daniel Stemmer
PCT Legal Examiner
Office of PCT Legal Administration
Telephone: (571) 272-3301

/Bryan Lin/

Bryan Lin
PCT Legal Examiner
Office of PCT Legal Administration

Doc Code: PET.GREEN
Document Description: Petition for Green Tech Pilot

PTO/SB/420 (05-10)
Approved for use through 01/31/2011. OMB 0651-0062
U.S. Patent and Trademark Office; U. S. DEPARTMENT OF COMMERCE
Under the Paperwork Reduction Act of 1995, no persons are required to respond to a collection of information unless it displays a valid OMB control number.

PETITION TO MAKE SPECIAL UNDER THE GREEN TECHNOLOGY PILOT PROGRAM

Attorney Docket Number: usutilitypa2	Application Number (if known): 12547505	Filing date: 26-AUG-2009

First Named Inventor: Pin Liang Lin

Title: ENVIRONMENT-FRIENDLY UTENSIL / OBJECT FOR PACKAGING/SUPPORTING/ACCOMMODATING/DEPOSITING FOOD / BEVERAGE / MERCHANDISE

APPLICANT HEREBY REQUESTS TO PARTICIPATE IN THE GREEN TECHNOLOGY PILOT PROGRAM FOR THE ABOVE-IDENTIFIED APPLICATION. See Instruction Sheet on page 2.

This petition must be timely filed electronically using the USPTO electronic filing system, EFS-Web.

1. By filing this petition:

   Applicant is requesting early publication: Applicant hereby requests early publication under 37 CFR 1.219 and the publication fee set forth in 37 CFR 1.18(d) accompanies this request.

2. By filing this petition: applicant is agreeing to make an election without traverse in a telephonic interview and elect an invention that meets the eligibility requirements set forth in the notice titled "Pilot Program for Green Technologies Including Greenhouse Gas Reduction," as modified by the notice titled "Elimination of Classification Requirement in the Green Technology Pilot Program," each of which was published in the Federal Register, if the Office determines that the claims are not obviously directed to a single invention.

3. This request is accompanied by statements of special status for the eligibility requirement.

4. The application contains no more than three (3) independent claims and twenty (20) total claims.

5. The application does not contain any multiple dependent claims.

6. Other attachments: one page of statements

Signature /Invr, Pin-Liang Lin, Mr/	Date Oct 07, 2010
Name (Print/Typed) Pin Liang Lin	Registration Number

***Note**: Signatures of all the inventors or assignees of record of the entire interest or their representative(s) are required in accordance with 37 CFR 1.33 and 11.18. Please see 37 CFR 1.4(d) for the form of the signature. If necessary, submit multiple forms for more than one signature, see below*.*

☐ *Total of _____ forms are submitted.

The information is required to obtain or retain a benefit by the public which is to file (and by the USPTO to process) an application. Confidentiality is governed by 35 U.S.C. 122 and 37 CFR 1.11 and 1.14. This collection is estimated to take 1 hour to complete, including gathering, preparing, and submitting the completed application form to the USPTO. Time will vary depending upon the individual case. Any comments on the amount of time you require to complete this form and/or suggestions for reducing this burden, should be sent to the Chief Information Officer, U.S. Patent and Trademark Office, U.S. Department of Commerce, P.O. Box 1450, Alexandria, VA 22313-1450. DO NOT SEND FEES OR COMPLETED FORMS TO THIS ADDRESS. **SEND TO: Commissioner for Patents, P.O. Box 1450, Alexandria, VA 22313-1450.**

If you need assistance in completing the form, call 1-800-PTO-9199 and select option 2.

Under the Paperwork Reduction Act of 1995, no persons are required to respond to a collection of information unless it displays a valid OMB control number.

Instruction Sheet for Petition to Make Special Under the Green Technology Pilot Program

(Not to be Submitted to the USPTO)

The following is a summary of the requirements (for more information see the notices (i) "Pilot Program for Green Technologies Including Greenhouse Gas Reduction" and (ii) "Elimination of Classification Requirement in the Green Technology Pilot Program," available on the USPTO web site at http://www.uspto.gov/patents/init_events/green_tech.jsp):

(1) The application must be a non-reissue, non-provisional utility application filed under 35 U.S.C. 111(a), or an international application that has entered the national stage in compliance with 35 U.S.C. 371. The application must be previously filed before the publication date of the notice cited above. Reexamination proceedings are excluded from this pilot program.

(2) The application must contain three or fewer independent claims and twenty or fewer total claims. The application must not contain any multiple dependent claims. For an application that contains more than three independent claims or twenty total claims, or multiple dependent claims, applicant must file a preliminary amendment in compliance with 37 CFR 1.121 to cancel the excess claims and/or the multiple dependent claims at the time the petition to make special is filed.

(3) The claims must be directed to a single invention that materially enhances the quality of the environment, or that materially contributes to: (1) the discovery or development of renewable energy resources; (2) the more efficient utilization and conservation of energy resources; or (3) green house gas emission reduction (see the eligibility requirements of sections II and III of the notice (i) cited above). The petition must include a statement that, if the USPTO determines that the claims are directed to multiple inventions (e.g., in a restriction requirement), applicant will agree to make an election without traverse in a telephonic interview, and elect an invention that meets the eligibility requirements in section II or III of the notice (i) cited above.

(4) The petition to make special must be timely filed electronically using the USPTO electronic filing system, EFS-Web, and selecting the document description of "Petition for Green Tech Pilot" on the EFS-Web screen. Applicant should use form PTO/SB/420, which is available as a Portable Document Format (PDF) fillable form in EFS-Web and on the USPTO Web site.

(5) The petition to make special must be filed at least one day prior to the date that a first Office action (which may be an Office action containing only a restriction requirement) appears in the Patent Application Information Retrieval (PAIR) system. Applicant may check the status of the application using PAIR.

(6) The petition to make special must be accompanied by a request for early publication in compliance with 37 CFR 1.219 and the publication fee set forth in 37 CFR 1.18(d).

Privacy Act Statement

The **Privacy Act of 1974 (P.L. 93-579)** requires that you be given certain information in connection with your submission of the attached form related to a patent application or patent. Accordingly, pursuant to the requirements of the Act, please be advised that: (1) the general authority for the collection of this information is 35 U.S.C. 2(b)(2); (2) furnishing of the information solicited is voluntary; and (3) the principal purpose for which the information is used by the U.S. Patent and Trademark Office is to process and/or examine your submission related to a patent application or patent. If you do not furnish the requested information, the U.S. Patent and Trademark Office may not be able to process and/or examine your submission, which may result in termination of proceedings or abandonment of the application or expiration of the patent.

The information provided by you in this form will be subject to the following routine uses:

1. The information on this form will be treated confidentially to the extent allowed under the Freedom of Information Act (5 U.S.C. 552) and the Privacy Act (5 U.S.C 552a). Records from this system of records may be disclosed to the Department of Justice to determine whether disclosure of these records is required by the Freedom of Information Act.
2. A record from this system of records may be disclosed, as a routine use, in the course of presenting evidence to a court, magistrate, or administrative tribunal, including disclosures to opposing counsel in the course of settlement negotiations.
3. A record in this system of records may be disclosed, as a routine use, to a Member of Congress submitting a request involving an individual, to whom the record pertains, when the individual has requested assistance from the Member with respect to the subject matter of the record.
4. A record in this system of records may be disclosed, as a routine use, to a contractor of the Agency having need for the information in order to perform a contract. Recipients of information shall be required to comply with the requirements of the Privacy Act of 1974, as amended, pursuant to 5 U.S.C. 552a(m).
5. A record related to an International Application filed under the Patent Cooperation Treaty in this system of records may be disclosed, as a routine use, to the International Bureau of the World Intellectual Property Organization, pursuant to the Patent Cooperation Treaty.
6. A record in this system of records may be disclosed, as a routine use, to another federal agency for purposes of National Security review (35 U.S.C. 181) and for review pursuant to the Atomic Energy Act (42 U.S.C. 218(c)).
7. A record from this system of records may be disclosed, as a routine use, to the Administrator, General Services, or his/her designee, during an inspection of records conducted by GSA as part of that agency's responsibility to recommend improvements in records management practices and programs, under authority of 44 U.S.C. 2904 and 2906. Such disclosure shall be made in accordance with the GSA regulations governing inspection of records for this purpose, and any other relevant (*i.e.*, GSA or Commerce) directive. Such disclosure shall not be used to make determinations about individuals.
8. A record from this system of records may be disclosed, as a routine use, to the public after either publication of the application pursuant to 35 U.S.C. 122(b) or issuance of a patent pursuant to 35 U.S.C. 151. Further, a record may be disclosed, subject to the limitations of 37 CFR 1.14, as a routine use, to the public if the record was filed in an application which became abandoned or in which the proceedings were terminated and which application is referenced by either a published application, an application open to public inspection or an issued patent.
9. A record from this system of records may be disclosed, as a routine use, to a Federal, State, or local law enforcement agency, if the USPTO becomes aware of a violation or potential violation of law or regulation.

PATENT

IN THE UNITED STATES PATENT AND TRADEMARK OFFICE

In Re Application of: Pin Liang Lin

Filed: 26-AUG-2009

Application No.: 12547505

Attorney Docket No: usutilitypa2

For: ENVIRONMENT-FRIENDLY UTENSIL / OBJECT FOR PACKAGING/SUPPORTING/ACCOMMODATING/DEPOSITING FOOD / BEVERAGE / MERCHANDISE

STATEMENTS FOR PETITIONING TO MAKE SPECIAL UNDER THE GREEN TECHNOLOGY PILOT PROGRAM

Sir:

Applicant hereby requests to participate in the GREEN TECHNOLOGY PILOT PROGRAM for the claims 11-20 of the above-identified application, i.e., claims 11-20 are hereby elected to be examined in the GREEN TECHNOLOGY PILOT PROGRAM.

The process according to the elected claims 11-20 is for manufacturing disposable utensils which can be used to replace those made of plastic. The utensils have merits of plastic material but are spontaneously decomposable in addition to being able to free consumers from being contaminated by toxicant which is supposed to be inherent in plastic material. Furthermore its higher resistance to the conducting of heat or iciness results in its even higher superiority over those made of plastic, leading to its even better potential of replacing plastic utensils. Therefore the technology according to the elected claims is conducive to the preservation of good environment.

Applicant / inventor's S-signature: /Invr, Pin-Liang Lin, Mr/

Applicant / inventor's Name: Pin Liang Lin (Family Name: Lin)

Date: Oct 07, 2010

UNITED STATES PATENT AND TRADEMARK OFFICE

UNITED STATES DEPARTMENT OF COMMERCE
United States Patent and Trademark Office
Address: COMMISSIONER FOR PATENTS
P.O. Box 1450
Alexandria, Virginia 22313-1450
www.uspto.gov

APPLICATION NO.	FILING DATE	FIRST NAMED INVENTOR	ATTORNEY DOCKET NO.	CONFIRMATION NO.
12/547,505	08/26/2009	Pin Liang Lin	usutilitypa2	5417

81226 7590 10/18/2010
Kuo, Tin-Ming
14F-6, No. 275, Linsen Road
Hsinchu, 300
TAIWAN

EXAMINER

ART UNIT	PAPER NUMBER
3781	

NOTIFICATION DATE	DELIVERY MODE
10/18/2010	ELECTRONIC

Please find below and/or attached an Office communication concerning this application or proceeding.

The time period for reply, if any, is set in the attached communication.

Notice of the Office communication was sent electronically on above-indicated "Notification Date" to the following e-mail address(es):

k432109@seed.net.tw
k432109@hotmail.com
ttt55aabb@gmail.com

UNITED STATES PATENT AND TRADEMARK OFFICE

Commissioner for Patents
United States Patent and Trademark Office
P.O. Box 1450
Alexandria, VA 22313-1450
www.uspto.gov

Kuo, Tin-Ming
14F-6, No. 275, Linsen Road
Hsinchu 300 TW TAIWAN

In re Application of	:	
LIN, PIN LIANG	:	DECISION ON PETITION
Application No. 12/547,505	:	TO MAKE SPECIAL UNDER
Filed: August 26, 2009	:	THE GREEN TECHNOLOGY
Attorney Docket No. usutilitypa2	:	PILOT PROGRAM
Title of Invention: ENVIRONMENT-FRIENDLY UTENSIL / OBJECT FOR PACKAGING /SUPPORTING/ACCOMMODATING/DEPOSITING FOOD / BEVERAGE / MERCHANDISE		

This is a decision on the petition under 37 CFR 1.102, filed October 8, 2010, to make the above-identified application special under the pilot program for applications pertaining to Green Technologies as set forth in 74 Federal Register Notice 64666 (December 8, 2009) and amended by 75 Federal Register Notice 28554 (May 21, 2010).

The petition is **DISMISSED**.

If reconsideration of this decision is desired, a petition for reconsideration must be filed within ONE (1) MONTH OR THIRTY (30) DAYS from the mail date of this decision, whichever is longer. No extension of this time limit can be granted under 37 CFR 1.136(a) or (b). The petition for reconsideration should include an exhaustive attempt to provide the lacking item(s) noted below, since, after a decision on the petition for reconsideration, no further reconsideration or review of the matter will be undertaken by the Director.

A grantable petition to make an application special under 37 CFR 1.102 and the pilot program as set forth in 74 FR 64666 must be directed to a nonprovisional application filed under 35 USC 111(a) or be a national stage entry under 35 USC 371, exclusive of any reissue applications and be filed prior to the date of the notice, December 8, 2009.

In order to qualify for special status, the following requirements must be met. 1) The application must have no more than 3 independent claims and no more than 20 total claims. 2) The application must not contain any multiple dependent claims. 3) The petition must state the basis for seeking special status, i.e., the claimed invention either: A) materially enhances the quality of

the environment or B) materially contributes to: i) the discovery or development of renewable energy resources, ii) the more efficient utilization and conservation of energy resources, or iii) greenhouse gas emission reduction. 4) If the disclosure is not clear on its face that the claimed invention materially contributes under category (A) or (B), the petition must be accompanied by a statement by the applicant, assignee, or an attorney/agent registered to practice before the Office explaining how the materiality standard is met. 5) A statement that applicant will agree to make an election without traverse in a telephonic interview if a restriction requirement is made by the examiner. 6) The petition to make special must be filed electronically. 7) The petition must be filed at least one day prior to the date that a first Office Action appears in the Patent Application Information Retrieval (PAIR) system. 8) The petition must be accompanied by a request for early publication in compliance with 37 CFR 1.219 and include the publication fee as set forth in 37 CFR 1.18(d).

The requirement for a fee for consideration of the petition to make special for applications pertaining to Green Technologies has been waived.

The petition lacks item # 4.

In regard to item 4, petitioner should note that the instant petition includes a statement identifying the basis for the special status (i.e., whether the instant invention (1) materially enhances the quality of the environment or materially contributes to (2) development of renewable energy resources or energy conservation, or (3) greenhouse gas reduction) as required by sections II and III of the notice. However, as stated in the notice, applicant must also provide a statement pertaining to the materiality standard if the application disclosure is not clear on its face as to the materiality of the basis for the special status of the invention. This petition lacks such a statement and it is not agreed that the application on its face meets that materiality standard. For example, it is not clear how the claimed starching and molding aid materials will provide and enhance the quality of the environment or contribute to development of renewable energy resources or energy conservation or greenhouse gas reduction.

Any reconsideration of this decision should be submitted through the USPTO electronic filing system, EFS-Web, and selecting the document description of "Petition for Green Tech Pilot" on the EFS-Web screen.

The application will be forwarded to the Technology Center Art Unit 3781 for action in its regular turn. Telephone inquiries concerning this decision should be directed to Henry C. Yuen at 571-272-4856.

/Henry C. Yuen/

Henry C. Yuen
Quality Assurance Specialist
Technology Center 3700

UNITED STATES PATENT AND TRADEMARK OFFICE

Commissioner for Patents
United States Patent and Trademark Office
Washington, D.C. 20231
www.uspto.gov

J C PATENTS
4 VENTURE, SUITE 250
IRVINE CA 92618

MAILED

MAR 08 2012

OFFICE OF PETITIONS

In re Patent No. 7,776,497	:	
Issue Date: 17 August, 2010	:	
Application No. 12/547,765	:	ON PETITION
Filed: 26 26 August, 2009	:	
Attorney Docket No. 1999-2C	:	

This is a decision on the petition filed on 28 December, 2011, to issue a certificate of correction and considered to waive the rules pursuant to 37 C.F.R. §1.183 and accept the correction of the assignee on the front page of the above-identified patent pursuant to 37 C.F.R. §1.323 and §3.81(a).

NOTE:

The requirements of the instant matter are set forth in the Commentary at MPEP §307 and §1480-§1485—Petitioner must provide the statement and showings in addition to the proper fees: the showing that the assignment pursuant to which Petitioner seeks a change, was recorded with the Office before issue.

Petitioner might find it beneficial to move stepwise through the requirements.

The petition is **DISMISSED**.

Petitioner requests issuance of a certificate of correction.

The regulations at 37 C.F.R. §3.81(a) permits the patent to issue to the assignee, provided that, at the time the issue fee is paid, the name of an assignee is provided. The regulations at 37 C.F.R. §3.81 (b) permits the patent to issue in the name of an assignee if the assignment was submitted after payment of the issue fee but prior to issuance of a patent.

The guidance in the Commentary at MPEP §307 provides:

307 Issue to Assignee [R-3]

35 U.S.C. §152. Issue of patent to assignee.

Patents may be granted to the assignee of the inventor of record in the Patent and Trademark Office, upon the application made and the specification sworn to by the inventor, except as otherwise provided in this title.

**>

37 C.F.R. §3.81. Issue of patent to assignee.

(a)*With payment of the issue fee*: An application may issue in the name of the assignee consistent with the application's assignment where a request for such issuance is submitted with payment of the issue fee, provided the assignment has been previously recorded in the Office. If the assignment has not been previously recorded, the request must state that the document has been filed for recordation as set forth in §3.11.

(b)*After payment of the issue fee*: Any request for issuance of an application in the name of the assignee submitted after the date of payment of the issue fee, and any request for a patent to be corrected to state the name of the assignee, must state that the assignment was submitted for recordation as set forth in § 3.11before issuance of the patent, and must include a request for a certificate of correction under §1.323 of this chapter (accompanied by the fee set forth in § 1.20(a)) and the processing fee set forth in §1.17 (i) of this chapter.

(c)*Partial assignees*. (1) If one or more assignee, together with one or more inventor, holds the entire right, title, and interest in the application, the patent may issue in the names of the assignee and the inventor.

(2)If multiple assignees hold the entire right, title, and interest to the exclusion of all the inventors, the patent may issue in the names of the multiple assignees.<

Normally, for a patent to issue to an assignee, a request for issuance of the application in the name* of the assignee* must be filed in the United States Patent and Trademark Office (Office) at a date not later than the day on which the issue fee is paid. **>Such a request must indicate that the assignment has been previously recorded in the Office. If the assignment has not been previously recorded in the Office, the request must state that the document has been filed for recordation as set forth in 37 C.F.R. §3.11. See 37 C.F.R. §3.81(a).

If a request for issuance to an assignee pursuant to 37 C.F.R. §3.81(b) is submitted after the day on which the issue fee is paid, the request under 37 C.F.R. §3.81(b) must include a request for a certificate of correction under 37 C.F.R. §1.323 (accompanied by the fee set forth in 37 C.F.R. §1.20(a)) and the processing fee set forth in 37 C.F.R. §1.17(i). The request under 37 C.F.R. §3.81(b) must state that the assignment was submitted for

recordation as set forth in 37 C.F.R. §3.11 before issuance of the patent. The Office will issue a certificate of correction to reflect that the patent issued to the assignee provided the requirements of 37 C.F.R. §3.81(b) and 37 C.F.R. §1.323 are complied with.<

Only the first appearing name of an assignee will be printed on the patent where multiple names for the same party are identified on the **>Fee(s)< Transmittal form, PTOL-85B. Such multiple names may occur when both a legal name and an "also known as" or "doing business as" name is also included. This printing practice will not, however, affect the existing practice of recording assignments with the Office in the Assignment Division. The assignee entry on form PTOL-85B should still be completed to indicate the assignment data as recorded in the Office. For example, the assignment filed in the Office and, therefore, the PTOL-85B assignee entry might read "Smith Company doing business as (d.b.a.) Jones Company." The assignee entry on the printed patent will read "Smith Company."

Irrespective of whether the assignee participates in the prosecution of the application, the patent issues to the assignee if so indicated on the **>Fee(s)< Transmittal form PTOL-85B. Unless an assignee's name and address are identified Transmittal form PTOL-the applicant. Assignment will be based solely on >Assignment information updated after a patent is reflective of the assignment subsequent to the issuance assignment information an assignment search on and by inspecting the documents.<

A request for a certificate 37 CFR 1.323 (see MPEP from incomplete or erroneous furnished >, or a missing PTOL-85B will not be under 37 CFR 3.81(b) assignment was submitted in 37 CFR 3.11 before request under 37 CFR the Office of Petitions

(A)the *>processing< 1.17(*>i<);
(B)a request **>for the name of the assignee, corrected to state the name
(C)a statement that submitted for recordation 3.11before the issuance of the
(D)a **>request under 37 CFR 1.323 accompanied in 37 CFR 1.20(a).<

The regulations at 37 C.F.R. §3.81(b) provide:

> *After payment of the issue fee:* Any request for issuance of an application in the name of the assignee submitted after the date of payment of the issue fee, and any request for a patent to be corrected to state the name of the assignee, must state that the assignment was submitted for recordation as set forth in § 3.11 before issuance of the patent, and must include a request for a certificate of correction under § 1.323 of this chapter (accompanied by the fee set forth in .§1.20(a) and the processing fee set forth in §1.17(i) of this chapter.

On any renewed petition, Petitioner must satisfy all showing and fee requirements.

Out of an abundance of caution, Petitioners always are reminded that those registered to practice and all others who make representations before the Office are reminded to inquire into the underlying facts of representations made to the Office and support averments with the appropriate documentation–since all owe to the Office the continuing duty to disclose.[1]

The availability of applications and application papers online to applicants/practitioners who diligently associate their Customer Number with the respective application(s) now provides an applicant/practitioner on-demand information as to events/transactions in an application.

CONCLUSION

Accordingly, the petition under 37 C.F.R. 37 C.F.R. §1.183, §1.323 and §3.81 is **dismissed**.

Further correspondence with respect to this matter should be addressed as follows:

By Mail: Mail Stop PETITION
Commissioner for Patents
P. O. Box 1450
Alexandria, VA 22313-1450

By hand: U. S. Patent and Trademark Office
Customer Service Window, Mail Stop Petitions
Randolph Building
401 Dulany Street
Alexandria, VA 22314

By facsimile: **(571) 273-8300**
Attn: Office of Petitions

[1] See supplement of 17 June, 1999. The Patent and Trademark Office is relying on Petitioner's duty of candor and good faith and accepting a statement made by Petitioner. See Changes to Patent Practice and Procedure, 62 Fed. Reg. at 53160 and 53178, 1203 Off. Gaz. Pat. Office at 88 and 103 (responses to comments 64 and 109)(applicant obligated under 37 C.F.R. §10.18 to inquire into the underlying facts and circumstances when providing statements to the Patent and Trademark Office).

Telephone inquiries regarding this decision may be directed to the undersigned at (571) 272-3214—it is noted, however, that all practice before the Office is in writing (see: 37 C.F.R. §1.2[2]) and the proper authority for action on any matter in this regard are the statutes (35 U.S.C.), regulations (37 C.F.R.) and the commentary on policy (MPEP). Therefore, no telephone discussion may be controlling or considered authority for Petitioner's action(s).

/John J. Gillon, Jr./
John J. Gillon, Jr.
Senior Attorney
Office of Petitions

[2] The regulations at 37 C.F.R. §1.2 provide:

§1.2 Business to be transacted in writing.

All business with the Patent and Trademark Office should be transacted in writing. The personal attendance of Petitioners or their attorneys or agents at the Patent and Trademark Office is unnecessary. The action of the Patent and Trademark Office will be based exclusively on the written record in the Office. No attention will be paid to any alleged oral promise, stipulation, or understanding in relation to which there is disagreement or doubt.

UNITED STATES PATENT AND TRADEMARK OFFICE

UNITED STATES DEPARTMENT OF COMMERCE
United States Patent and Trademark Office
Address: COMMISSIONER FOR PATENTS
P.O. Box 1450
Alexandria, Virginia 22313-1450
www.uspto.gov

APPLICATION NO.	FILING DATE	FIRST NAMED INVENTOR	ATTORNEY DOCKET NO.	CONFIRMATION NO.
12/547,780	08/26/2009	An-Chi Liu	66007-403	5900

65358 7590 09/22/2011
WPAT, PC
INTELLECTUAL PROPERTY ATTORNEYS
7225 BEVERLY ST.
ANNANDALE, VA 22003

EXAMINER
PHAM, THANHHA S

ART UNIT	PAPER NUMBER
2894	

MAIL DATE	DELIVERY MODE
09/22/2011	PAPER

Please find below and/or attached an Office communication concerning this application or proceeding.

The time period for reply, if any, is set in the attached communication.

UNITED STATES PATENT AND TRADEMARK OFFICE

Commissioner for Patents
United States Patent and Trademark Office
P.O. Box 1450
Alexandria, VA 22313-1450
www.uspto.gov

WPAT, P.C.
INTELLECTUAL PROPERTY ATTORNEYS
7225 BEVERLY ST.
ANNANDALE, VA 22003

In re Application of An-Chi Liu et al. Appl. No.: 12/547,780 Filed: August 26, 2009 Attorney Docket No.: 66007-403 For: SEMICONDUCTOR PROCESS	: : : : : :	DECISION ON PETITION UNDER 37 C.F.R. § 1.59

This is a decision on the petition under 37 C.F.R. §1.59(b), filed July 26, 2011, to expunge information filed concurrently from the above-identified application.

The petition is DENIED.

Petitioner states that "[t]he material in the submitted envelope or container is considered as a trade secret or proprietary" and requests that "the submitted trade secret material be" be expunged from the record because petitioner believes that the material should not be found to be material to patentability. The required petition fee has been received.

Pursuant to M.P.E.P. § 724.05. I., "... Any such petition to expunge information submitted under MPEP § 724.02 should be submitted at the time of filing the information under MPEP § 724.02 and directed to the Technology Center (TC) to which the application is assigned. Such petition must contain:

(A) a clear identification of the information to be expunged without disclosure of the details thereof;
(B) a clear statement that the information to be expunged is trade secret material, proprietary material, and/or subject to a protective order, and that the information has not been otherwise made public;
(C) a commitment on the part of the petitioner to retain such information for the period of any patent with regard to which such information is submitted;
(D) a statement that the petition to expunge is being submitted by, or on behalf of, the party in interest who originally submitted the information;
(E) the fee as set forth in 37 CFR 1.17(g) for a petition under 37 CFR 1.59(b)."

The petition also does not satisfy conditions (B), (C) and (D) above for a grantable petition to expunge proprietary because there is no assertion the information sought to be expunged has not been made public, there is no a commitment on the part of the petitioner to retain such information for the period of any patent with regard to which such information is submitted and there is no statement that the petition to expunge is being submitted by, or on behalf of, the party in interest who originally submitted the information .

For the above-stated reasons, the petition to expunge is denied. The information submitted with the IDS on July 26, 2011 will remain in the file record.

Any inquiry regarding this decision should be directed to Hien H. Phan, Quality Assurance Specialist, at (571) 272-1606.

John W. Cabeca, TC Director
Technology Center 2800
Semiconductors, Electrical and Optical
Systems and Components

UNITED STATES PATENT AND TRADEMARK OFFICE

Commissioner for Patents
United States Patent and Trademark Office
P.O. Box 1450
Alexandria, VA 22313-1450
www.uspto.gov

RYAN, MASON & LEWIS, LLP
1300 POST ROAD
SUITE 205
FAIRFIELD CT 06824

MAILED
MAR 15 2011
OFFICE OF PETITIONS

In re Application of	:	
Nicholas FOLEY, et al	:	
Application No. 12/547,888	:	DECISION ON PETITION
Filed: August 19, 2010	:	
Attorney Docket No. CEN5270USDP	:	

This is a decision on the petition under 37 CFR 1.182, filed, January 13, 2011, for corrected Filing Receipt.

The petition is **DISMISSED**.

In the petition dated January 18, 2011, petitioner states that the original filing materials filed August 26, 2009, properly identified the inventors as Fitzpatrick and Haratsch and that Inventor Ashley from the parent patent application is not an inventor of the claims of the present application.

A review of the file record shows the Transmittal Sheet filed August 26, 2009, specifically states the application is being filed by all inventors of the prior application. Since the continuation was not filed with a statement requesting the deletion of the name of the person who is not the inventor or with a newly executed oath or declaration naming the correct inventive entity, the request for corrected Filing Receipt under 37 CFR 1.182 cannot be granted. See 37 CFR 1.53(d)(4).

As authorized, the petition fee of $400 as set forth in 37 CFR 1.17(f) has been charged to Deposit Account No. 50-0762.

Further correspondence with respect to this matter should be addressed as follows:

By mail: Mail Stop PETITIONS
Commissioner for Patents
Post Office Box 1450
Alexandria, VA 22313-1450

By hand: Customer Service Window
Mail Stop Petitions
Randolph Building
401 Dulany Street
Alexandria, VA 22314

By fax: (571) 273-8300
ATTN: Office of Petitions

Any questions concerning this matter may be directed to Diane Goodwyn at (571) 272-6735.

Thurman K. Page
Petitions Examiner
Office of Petitions

UNITED STATES PATENT AND TRADEMARK OFFICE

Commissioner for Patents
United States Patent and Trademark Office
P.O. Box 1450
Alexandria, VA 22313-1450
www.uspto.gov

RYAN, MASON & LEWIS, LLP
1300 POST ROAD
SUITE 205
FAIRFIELD CT 06824

MAILED

JUN 17 2011

OFFICE OF PETITIONS

In re Application of Nicholas FOLEY, et al Application No. 12/547,888 Filed: August 19, 2010 Attorney Docket No. ASHLEY 5-1-13-JJ-CON3-US	: : : : :	DECISION ON PETITION

This is a decision on the petition under 37 CFR 1.182, filed, April 21, 2011, for corrected Filing Receipt.

The petition is **DISMISSED**.

In the petition dated April 21, 2011, petitioner is requesting a corrected filing receipt to have the instant application issue in the names of inventors Kelly K. Fitzpatrick and Erich F. Haratsch.

A review of the file record shows the Transmittal Sheet filed August 26, 2009, specifically states the application is being filed by all inventors of the prior application. Since the continuation was not filed with a statement requesting the deletion of the name of the person who is not the inventor or with a newly executed oath or declaration naming the correct inventive entity, the request for corrected Filing Receipt under 37 CFR 1.182 cannot be granted. See 37 CFR 1.53(d)(4). See 37 CFR 1.48 for correction of inventorsip.

Further correspondence with respect to this matter should be addressed as follows:

By mail: Mail Stop PETITIONS
Commissioner for Patents
Post Office Box 1450
Alexandria, VA 22313-1450

By hand: Customer Service Window
Mail Stop Petitions
Randolph Building
401 Dulany Street
Alexandria, VA 22314

By fax: (571) 273-8300
ATTN: Office of Petitions

Any questions concerning this matter may be directed to Diane Goodwyn at (571) 272-6735.

Thurman K. Page
Petitions Examiner
Office of Petitions

UNITED STATES PATENT AND TRADEMARK OFFICE

Commissioner for Patents
United States Patent and Trademark Office
P.O. Box 1450
Alexandria, VA 22313-1450
www.uspto.gov

MCDERMOTT WILL & EMERY LLP
600 13TH STREET, N.W.
WASHINGTON DC 20005-3096

MAILED

JAN 12 2011

OFFICE OF PETITIONS

In re Application of	:	
Komori et al.	:	
Application No. 12/547,896	:	DECISION ON PETITION
Filed: August 26, 2009	:	
Attorney Docket No. WILL0102PUS	:	

This is a decision on the petition under the unintentional provisions of 37 CFR 1.137(b), filed November 15, 2010, to revive the above-identified application.

The petition is **GRANTED**.

The application became abandoned for failure to reply in a proper and timely manner to the Notice to File Missing Parts of Nonprovisional Application (Notice), mailed September 15, 2009 and the Notice of Incomplete Reply (Nonprovisional) mailed November 23, 2009. The original Notice set a period for reply of two (2) months from the mail date of the Notice. No extensions of time under the provisions of 37 CFR 1.136(a) were obtained. Accordingly, the application became abandoned on November 16, 2009. A Notice of Abandonment was mailed September 24, 2010.

The petition satisfies the requirements of 37 CFR 1.137(b) in that petitioner has supplied (1) Replacement Drawings (2) the petition fee of $1,620.00, and (3) a proper statement of unintentional delay.

Further, it is not apparent whether the statement of unintentional delay was signed by a person who would have been in a position of knowing that the **entire** delay in filing the required reply from the due date for the reply until the filing of a grantable petition pursuant to 37 CFR 1.137(b) was unintentional. Nevertheless, in accordance with 37 CFR 10.18, the statement is accepted as constituting a certification of unintentional delay. However, in the event that petitioner has no knowledge that the delay was unintentional, petitioner must make such an inquiry to ascertain that, in fact, the delay was unintentional. If petitioner discovers that the delay was intentional, petitioner must notify the Office.

Telephone inquiries concerning this decision should be directed to the undersigned at (571)272-7751.

This application is being referred to the Office of Patent Application Processing for further processing in accordance with this decision on petition.

Joan Olszewski
Petition Examiner
Office of Petitions

UNITED STATES PATENT AND TRADEMARK OFFICE

Commissioner for Patents
United States Patent and Trademark Office
P.O. Box 1450
Alexandria, VA 22313-1450
www.uspto.gov

FAY KAPLUN & MARCIN, LLP
150 BROADWAY, SUITE 702
NEW YORK, NY 10038

MAILED
FEB 02 2011
OFFICE OF PETITIONS

Applicants: Kienzle, et al.
Appl. No.: 12/547,926
Filing Date: August 26, 2009
Title: MODULAR DESIGN FOR A FILL-LEVEL-RADAR ANTENNA SYSTEM
Attorney Docket: 40124/13702 (V 8243/KK)
Pub. No.: US 2010/0066594 A1
Pub. Date: March 18, 2010

This is a decision on the request for a corrected patent application publication under 37 CFR 1.221(b), received on May 10, 2010, for the above-identified application.

The request is granted

The corrected patent application publication will be published in due course, unless the patent issues before the application is republished.

The error occurred because the quality of the text misprinted is not clear. Applications with poor quality text maybe acceptable for scanning and examination purpose, may lead to errors in the patent application publication.

It would greatly benefit the Office if **applicant did not provide copies of papers**, which were previously submitted and/or **a complete copy of the pre-grant publication**, as it unnecessarily increases the cost to the Office. See 37 CFR 1.4(b). A request for corrected publication need only point out what was printed incorrectly in the application, where the error occurs in the publication and where the correct text or drawing is found in the application papers. Marked up relevant copies of the applications papers and the pre-grant publication may facilitate processing of the request, where it is not readily apparent where the error occurs. If it is not clear why the error is a material error, further explanation may be warranted.

Inquiries relating to this matter may be directed to Mark Polutta at (571) 272-7709.

M. O. Polutta

Mark Polutta
Senior Legal Advisor
Office of Patent Legal Administration
Office of the Deputy Commissioner
for Patent Examination Policy

UNITED STATES PATENT AND TRADEMARK OFFICE

UNITED STATES DEPARTMENT OF COMMERCE
United States Patent and Trademark Office
Address: COMMISSIONER FOR PATENTS
P.O. Box 1450
Alexandria, Virginia 22313-1450
www.uspto.gov

APPLICATION NO.	FILING DATE	FIRST NAMED INVENTOR	ATTORNEY DOCKET NO.	CONFIRMATION NO.
12/547,985	08/26/2009	Keizo SHIBANO	0229-1077PUS1	6253

2292 7590 01/21/2011
BIRCH STEWART KOLASCH & BIRCH
PO BOX 747
FALLS CHURCH, VA 22040-0747

EXAMINER

ART UNIT	PAPER NUMBER
1747	

NOTIFICATION DATE	DELIVERY MODE
01/21/2011	ELECTRONIC

Please find below and/or attached an Office communication concerning this application or proceeding.

The time period for reply, if any, is set in the attached communication.

Notice of the Office communication was sent electronically on above-indicated "Notification Date" to the following e-mail address(es):

mailroom@bskb.com

UNITED STATES PATENT AND TRADEMARK OFFICE

Commissioner for Patents
United States Patent and Trademark Office
P.O. Box 1450
Alexandria, VA 22313-1450
www.uspto.gov

January 20, 2011 BC

In re application of Keizo Shibano Serial No. 12/547,985 Filed: August 26, 2009 For: HEAVY-DUTY TIRE	: : : : : : :	DECISION ON REQUEST TO PARTICIPATE IN PATENT PROSECUTION HIGHWAY PROGRAM AND PETITION TO MAKE SPECIAL UNDER 37 CFR 1.102(a)

This is a decision on the request to participate in the Patent Prosecution Highway (PPH) program filed November 23, 2010.

The request and petition are **GRANTED**.

A grantable request to participate in the PPH program and petition to make special require:

(1) The U.S. application must validly claim priority under 35 U.S.C. 119(a) to one or more applications filed in the JPO, note where the JPO application with similar claims is not the same application from which the U.S. application claims priority that the applicant must identify the relationship between the JPO application with similar claims and the JPO priority application;

(2) Applicant must submit a copy of:
   a. The allowable/patentable claim(s) from the JPO application(s) or if a copy of the allowable/patentable claims is available via the Dossier Access System (DAS) applicant may request the USPTO to obtain a copy from DAS; however, if the USPTO is unable to obtain a copy from the DAS, the applicant will be required to submit a copy;
   b. An English translation of the allowable/ patentable claim(s), if applicable; and
   c. A statement that the English translation is accurate, if applicable;

(3) Applicant must:
   a. Ensure all the claims in the U.S. application must sufficiently correspond or be amended to sufficiently correspond to the allowable/patentable claim(s) in the JPO application(s); and
   b. Submit a claims correspondence table in English;

(4) Examination of the U.S. application has not begun;

(5) Applicant must submit:
   a. Documentation of prior office action:

i. a copy of the office action(s) just prior to the "Decision to Grant a Patent" from each of the JPO application(s) containing the allowable/patentable claims(s) or

ii. if the allowable/patentable claim(s) are from "Notification of Reasons for Refusal" then the Notification of Reasons for Refusal or

iii. if the JPO application is a first action allowance then no office action from the JPO is necessary should be indicated on the request/petition form;

Further, if a copy of the documents from a or b is available via the Dossier Access System (DAS), applicant may request the USPO obtain a copy from the DAS; however, if the USPTO is unable to obtain a copy of the DAS, the applicant will be required to submit a copy;

b. An English language translation of the JPO Office action from (5)(a)(i)-(ii) above if applicable; and
c. A statement that the English translation is accurate; and

(6) Applicant must submit:
a. An IDS listing the documents cited by the JPO examiner in the JPO office action (unless already submitted in this application)
b. Copies of documents except U.S. patents or U.S. patent application publications (unless already submitted in this application).

The request to participate in the PPH program and petition comply with the above requirements. Accordingly, the above-identified application has been accorded "special" status.

The application is being forwarded to the examiner for action on the merits commensurate with this decision.

Any inquiry regarding this decision should be directed to Blaine Copenheaver, Quality Assurance Specialist, at (571) 272-1156.

All other inquiries concerning the examination or status of the application is accessible in the PAIR system at http://www.uspto.gov/ebc/index.html.

/Blaine Copenheaver/

Blaine Copenheaver
Quality Assurance Specialist
Technology Center 1700

PTO/SB/20PCT-EP (05-10)
Approved for use through 01/31/2012. OMB 0651-0058
U.S. Patent and Trademark Office; U. S. DEPARTMENT OF COMMERCE
Under the Paperwork Reduction Act of 1995, no persons are required to respond to a collection of information unless it displays a valid OMB control number.

REQUEST FOR PARTICIPATION IN THE PATENT COOPERATION TREATY - PATENT PROSECUTION HIGHWAY (PCT-PPH) PILOT PROGRAM BETWEEN THE EUROPEAN PATENT OFFICE (EPO) AND THE USPTO

Application No:	12548007	Filing date:	08-26-2009
First Named Inventor:	David C. Rogers		
Title of the Invention:	ADJUSTABLE HELMET AND RELATED METHOD OF USE		

THIS REQUEST FOR PARTICIPATION IN THE PCT-PPH PILOT PROGRAM ALONG WITH THE REQUIRED DOCUMENTS MUST BE SUBMITTED VIA EFS-WEB. INFORMATION REGARDING EFS-WEB IS AVAILABLE AT HTTP://WWW.USPTO.GOV/EBC/EFS_HELP.HTML

APPLICANT HEREBY REQUESTS PARTICIPATION IN THE PCT-PPH PROGRAM AND PETITIONS TO MAKE THE ABOVE-IDENTIFIED APPLICATION SPECIAL UNDER THE PCT-PPH PROGRAM.

The above-identified application is (1) a national stage entry of the corresponding PCT application, or (2) a national stage entry of another PCT application which claims priority to the corresponding PCT application, or (3) a national application that claims domestic/ foreign priority to the corresponding PCT application, or (4) a national application which forms the basis for the priority claim in the corresponding PCT application, or (5) a continuing application of a U.S. application that satisfies one of (1) to (4) above, or (6) a U.S. application that claims domestic benefit to a U.S. provisional application which forms the basis for the priority claim in the corresponding PCT application.

The corresponding PCT application number(s) is/are: PCT/US2009/055052

The international filing date of the corresponding PCT application(s) is/are: 08-26-2009

I. List of Required Documents:

a. **A copy of the latest international work product (WO/ISA, WO/IPEA, or IPER) in the above–identified corresponding PCT application(s)**

- [x] Is attached
- [ ] Is not attached because the document is already in the U.S. application.

b. **A copy of all claims which were indicated as having novelty, inventive step and industrial applicability in the above-identified corresponding PCT application(s).**

- [x] Is attached.
- [ ] Is not attached because the document is already in the U.S. application.

c. **English translations of the documents in a. and b. above are attached (if the documents are not in the English language). A statement that the English translation is accurate is attached for the document in b. above.**

This collection of information is required by 35 U.S.C. 119, 37 CFR 1.55, and 37 CFR 1.102(d). The information is required to obtain or retain a benefit by the public, which is to file (and by the USPTO to process) an application. Confidentiality is governed by 35 U.S.C. 122 and 37 CFR 1.11 and 1.14. This collection is estimated to take 2 hours to complete, including gathering, preparing, and submitting the completed application form to the USPTO. Time will vary depending upon the individual case. Any comments on the amount of time you require to complete this form and/or suggestions for reducing this burden should be sent to the Chief Information Officer, U.S. Patent and Trademark Office, U.S. Department of Commerce, P.O. Box 1450, Alexandria, VA 22313-1450. DO NOT SEND FEES OR COMPLETED FORMS TO THIS ADDRESS.

Approved for use through 01/31/2012. OMB 0651-0058
U.S.Patent and Trademark Office; U.S. DEPARTMENT OF COMMERCE

Under the Paperwork Reduction Act of 1995, no persons are required to respond to a collection of information unless it displays a valid OMB control number.

REQUEST FOR PARTICIPATION IN THE PCT-PPH PILOT PROGRAM BETWEEN THE EPO AND THE USPTO

(continued)

Application No.:	12548007
First Named Inventor:	David C. Rogers

d. **(1) An information disclosure statement listing the documents cited in the international work products (ISR, WO/ISA, WO/IPEA, IPER) of the corresponding PCT application.**

☐ Is attached

☒ Has already been filed in the above-identified U.S. application on 05-25-2010

(2) Copies of all documents (except) for U.S. patents or U.S. patent application publications)

☐ Are attached.

☒ Have already been filed in the above-identified U.S. application on 05-25-2010

II. Claims Correspondence Table:

Claims in US Application	Patentable Claims in the corresponding PCT Application	Explanation regarding the correspondence
1-30	1-30	Claims are identical

III. All the claims in the US application sufficiently correspond to the patentable claims in the corresponding PCT application.

Signature /Gregory P. Bondarenko/	Date 08-10-2011
Name (Print/Typed) Gregory P. Bondarenko	Registration Number 44547

Privacy Act Statement

The **Privacy Act of 1974 (P.L. 93-579)** requires that you be given certain information in connection with your submission of the attached form related to a patent application or patent. Accordingly, pursuant to the requirements of the Act, please be advised that: (1) the general authority for the collection of this information is 35 U.S.C. 2(b)(2); (2) furnishing of the information solicited is voluntary; and (3) the principal purpose for which the information is used by the U.S. Patent and Trademark Office is to process and/or examine your submission related to a patent application or patent. If you do not furnish the requested information, the U.S. Patent and Trademark Office may not be able to process and/or examine your submission, which may result in termination of proceedings or abandonment of the application or expiration of the patent.

The information provided by you in this form will be subject to the following routine uses:

1. The information on this form will be treated confidentially to the extent allowed under the Freedom of Information Act (5 U.S.C. 552) and the Privacy Act (5 U.S.C 552a). Records from this system of records may be disclosed to the Department of Justice to determine whether disclosure of these records is required by the Freedom of Information Act.
2. A record from this system of records may be disclosed, as a routine use, in the course of presenting evidence to a court, magistrate, or administrative tribunal, including disclosures to opposing counsel in the course of settlement negotiations.
3. A record in this system of records may be disclosed, as a routine use, to a Member of Congress submitting a request involving an individual, to whom the record pertains, when the individual has requested assistance from the Member with respect to the subject matter of the record.
4. A record in this system of records may be disclosed, as a routine use, to a contractor of the Agency having need for the information in order to perform a contract. Recipients of information shall be required to comply with the requirements of the Privacy Act of 1974, as amended, pursuant to 5 U.S.C. 552a(m).
5. A record related to an International Application filed under the Patent Cooperation Treaty in this system of records may be disclosed, as a routine use, to the International Bureau of the World Intellectual Property Organization, pursuant to the Patent Cooperation Treaty.
6. A record in this system of records may be disclosed, as a routine use, to another federal agency for purposes of National Security review (35 U.S.C. 181) and for review pursuant to the Atomic Energy Act (42 U.S.C. 218(c)).
7. A record from this system of records may be disclosed, as a routine use, to the Administrator, General Services, or his/her designee, during an inspection of records conducted by GSA as part of that agency's responsibility to recommend improvements in records management practices and programs, under authority of 44 U.S.C. 2904 and 2906. Such disclosure shall be made in accordance with the GSA regulations governing inspection of records for this purpose, and any other relevant (*i.e.*, GSA or Commerce) directive. Such disclosure shall not be used to make determinations about individuals.
8. A record from this system of records may be disclosed, as a routine use, to the public after either publication of the application pursuant to 35 U.S.C. 122(b) or issuance of a patent pursuant to 35 U.S.C. 151. Further, a record may be disclosed, subject to the limitations of 37 CFR 1.14, as a routine use, to the public if the record was filed in an application which became abandoned or in which the proceedings were terminated and which application is referenced by either a published application, an application open to public inspection or an issued patent.
9. A record from this system of records may be disclosed, as a routine use, to a Federal, State, or local law enforcement agency, if the USPTO becomes aware of a violation or potential violation of law or regulation.

UNITED STATES PATENT AND TRADEMARK OFFICE

UNITED STATES DEPARTMENT OF COMMERCE
United States Patent and Trademark Office
Address: COMMISSIONER FOR PATENTS
P.O. Box 1450
Alexandria, Virginia 22313-1450
www.uspto.gov

APPLICATION NO.	FILING DATE	FIRST NAMED INVENTOR	ATTORNEY DOCKET NO.	CONFIRMATION NO.
12/548,007	08/26/2009	David C. Rogers	086624.134590-0001	6296

24335 7590 09/19/2011
WARNER NORCROSS & JUDD LLP
INTELLECTUAL PROPERTY GROUP
900 FIFTH THIRD CENTER
111 LYON STREET, N.W.
GRAND RAPIDS, MI 49503-2487

EXAMINER
SUTTON, ANDREW W

ART UNIT	PAPER NUMBER
3765	

NOTIFICATION DATE	DELIVERY MODE
09/19/2011	ELECTRONIC

Please find below and/or attached an Office communication concerning this application or proceeding.

The time period for reply, if any, is set in the attached communication.

Notice of the Office communication was sent electronically on above-indicated "Notification Date" to the following e-mail address(es):

patents@wnj.com

UNITED STATES PATENT AND TRADEMARK OFFICE

Commissioner for Patents
United States Patent and Trademark Office
P.O. Box 1450
Alexandria, VA 22313-1450
www.uspto.gov

WARNER NORCROSS & JUDD LLP
INTELLECTUAL PROPERTY GROUP
900 FIFTH THIRD CENTER
111 LYON STREET, N.W.
GRAND RAPIDS MI 49503-2487

In re Application of	:	
ROGERS, DAVID C., et al.	:	DECISION ON REQUEST TO
Application No. 12/548,007	:	PARTICIPATE IN PATENT
Filed: August 26, 2009	:	PCT/PROSECUTION HIGHWAY
Attorney Docket No. 086624.134590-0001	:	PROGRAM AND PETITION
For: ADJUSTABLE HELMET AND	:	TO MAKE SPECIAL UNDER
RELATED METHOD OF USE	:	37 CFR 1.102(a)

This is a decision on the request to participate in the Patent Prosecution Highway (PPH) program and the petition under 37 CFR 1.102(a), filed August 10, 2011 to make the above-identified application special.

The request and petition are granted.

A grantable request to participate in the PPH pilot program and petition to make special require:

(1) The U.S. application must validly claim priority under 35 U.S.C. 119(a) to one or more applications filed in the JPO;
(2) Applicant must submit a copy of the allowable/patentable claim(s) from the JPO/PCT application(s) along with an English translation thereof and a statement that the English translation is accurate;
(3) All the claims in the U.S. application must sufficiently correspond or be amended to sufficiently correspond to the allowable/patentable claim(s) in the JPO application(s);
(4) Examination of the U.S. application has not begun;
(5) Applicant must submit a copy of all the office actions from each of the JPO/PCT application(s) containing the allowable/patentable claim(s) along with an English translation thereof and a statement that the English translation is accurate; and
(6) Applicant must submit an IDS listing the documents cited by the JPO examiner in the JPO office action along with copies of documents except U.S. patents or U.S. patent application publications.
In light of the petition being properly submitted, the request to participate in the PPH program and the petition comply with the above requirements. Accordingly, the above-identified application has been accorded "special" status.

The applicant is encouraged to cite and submit all relevant prior art references, if any, to facilitate examination in this application. Upon completion of pre-examination processing, this application will be forwarded to an examiner for examination.

Telephone inquiries concerning this decision should be directed to Henry C. Yuen at 571-272-4485. All other inquiries concerning the examination or status of the application should be directed to Gary Welch, SPE of Art Unit 3765, and 571-272-4996 for Class 002 and also accessible in the PAIR system at http://www.uspto.gov/ebc.index.html.

Petition is **granted**.

/Henry C. Yuen/

Henry C. Yuen, Special Programs Examiner
Technology Center 3700 – Mechanical Engineering,
Manufacturing and Products
571-272-4856

UNITED STATES PATENT AND TRADEMARK OFFICE

Commissioner for Patents
United States Patent and Trademark Office
P.O. Box 1450
Alexandria, VA 22313-1450
www.uspto.gov

WELSH & FLAXMAN LLC
2000 DUKE STREET, SUITE 100
ALEXANDRIA, VA 22314

MAILED

OCT 01 2010

OFFICE OF PETITIONS

In re Application of	:	
Landsman et al.	:	DECISION ON PETITION
Application No. 12/548,080	:	TO WITHDRAW
Filed: August 26, 2009	:	FROM RECORD
Attorney Docket No. RING-001	:	

This is a decision on the Request to Withdraw as attorney or agent of record under 37 C.F.R. § 1.36(b), filed on August 9, 2010.

The request is **NOT APPROVED**.

The Office will only accept correspondence address changes to the most current address information provided for the assignee of the entire interest *who properly became of record under 37 CFR 3.71,* or, if no assignee of the entire interest has properly been made of record, the most current address information provided for the first named inventor. 37 CFR 3.71(c) states:

> *An assignee becomes of record either in a national patent application or a reexamination proceeding by filing a statement in compliance with § 3.73(b) that is signed by a party who is authorized to act on behalf of the assignee.*

As there is no Statement under 37 CFR 3.73(b) in the above instant application, the request cannot be granted at this time. All future communications from the Office will be directed to above-listed address until otherwise properly notified by the applicant or a proper change of correspondence address have been submitted.

There are no outstanding Office actions that require a reply from the applicant.

Telephone inquires concerning this decision should be directed to the undersigned at (571) 272-6059. All other inquires concerning either the examination or status of the application should be directed to the Technology Center.

A. Kelley

Alicia Kelley
Petitions Examiner
Office of Petitions

UNITED STATES PATENT AND TRADEMARK OFFICE

Commissioner for Patents
United States Patent and Trademark Office
P.O. Box 1450
Alexandria, VA 22313-1450
www.uspto.gov

IP PATENT DOCKETING
K&L GATES LLP
599 LEXINGTON AVENUE, 33RD FLOOR
NEW YORK, NY 10022-6030

MAILED

SEP 29 2010

OFFICE OF PETITIONS

In re Application of
Craig BOLON
Application No. 12/548,082
Filed: August 26, 2009
Attorney Docket No. **0813907.10002**

DECISION ON PETITION TO WITHDRAW FROM RECORD

This is a decision on the Request to Withdraw as attorney or agent of record under 37 C.F.R. § 1.36(b), filed August 12, 2010.

The request is **NOT APPROVED.**

The request to withdraw as attorney/agent of record and change of correspondence address is hereby not accepted. Petitioner has not complied with current USPTO requirements, set forth in 37 CFR 10.40 concerning Request for Withdrawal as Attorney and Change of Correspondence Address. Specifically, pursuant to 37 CFR 10.40, the Office will require the practitioner(s) to certify that he, she or they have:

> (1) given reasonable notice to the client, prior to the expiration of the reply period, that the practitioner(s) intends to withdraw from employment;
>
> **(2) delivered to the client or duly authorized representative of the client all papers and property (including funds) to which the client is entitled; and**
>
> (3) notified the client of any replies that may be due and the time frame within which the client must respond.

Petitioner has not complied with item (2) of the above certifications.

Further, the Office will only accept correspondence address changes to the most current address information provided for the assignee of the entire interest *who properly became of record under 37 CFR 3.71*, or if no assignee of the entire interest has properly been made of record, the most current address information provided for the first named inventor. 37 CFR 3.71 (c) states:

An assignee becomes of record either in a national patent application or a reexamination proceeding by filing a statement in compliance with § 3.73 (b) that is signed by a party who is authorized to act on behalf of the assignee.

The Office will also no longer change the correspondence address to that of a new practitioner unless the Request is accompanied by a power of attorney to a new practitioner (e.g., Form PTO/SB/82). All future communications from the Office will be directed to the above-listed address until otherwise properly notified by the applicant or a proper change of correspondence address has been submitted.

Telephone inquiries concerning this decision should be directed to the undersigned at 571-272-7253.

All other inquires concerning either the examination or status of the application should be directed to the Technology Center at (571) 272-2400.

/Monica A. Graves/
Petitions Examiner, Office of Petitions

cc: **ELECTRONIC HEALTH RECORDS, CORP.**
275 GROVE STREET, SUITE 2-400
NEWTON, MA 02466

UNITED STATES PATENT AND TRADEMARK OFFICE

UNITED STATES DEPARTMENT OF COMMERCE
United States Patent and Trademark Office
Address: COMMISSIONER FOR PATENTS
P.O. Box 1450
Alexandria, Virginia 22313-1450
www.uspto.gov

APPLICATION NO.	FILING DATE	FIRST NAMED INVENTOR	ATTORNEY DOCKET NO.	CONFIRMATION NO.
12/548,092	08/26/2009	Jyunichi AIZAWA	2611-0333PUS1	6441

7590 01/12/2011
BIRCH STEWART KOLASCH & BIRCH
PO BOX 747
FALLS CHURCH, VA 22040-0747

EXAMINER
WONG, TINA MEI SENG

ART UNIT	PAPER NUMBER
2874	

NOTIFICATION DATE	DELIVERY MODE
01/12/2011	ELECTRONIC

DECISION GRANTING PETITION UNDER 37 CFR 1.138(d)

The declaration of express abandonment is recognized

This is in response to the petition under 37 CFR 1.138(d), requesting for a refund of any previously paid search fee and excess claims fee in the above-identified application.

The petition is granted.

The express abandonment is recognized. Any previously paid search fee and excess claims fee are hereby refunded.

Telephone inquiries should be directed to the Office of Data Management at (571) 272-4200.

Tiomi Farmer

Patent Publication Branch
Office of Data Management

FORM PET651G (Rev. 08/07)

UNITED STATES PATENT AND TRADEMARK OFFICE

Commissioner for Patents
United States Patent and Trademark Office
P.O. Box 1450
Alexandria, VA 22313-1450
www.uspto.gov

IP PATENT DOCKETING
K & L GATES, LLP
599 LEXINGOTIN AVENUE
33RD FLOOR
NEW YORK, NY 10022-6030

MAILED
SEP 27 2010
OFFICE OF PETITIONS

In re Application of
Craig Bolon
Application No. 12/548,146
Filed: August 26, 2009
Attorney Docket No. 0813907.10102

DECISION ON PETITION
TO WITHDRAW
FROM RECORD

This is a decision on the Request to Withdraw as attorney or agent under 37 C.F.R. § 1.36(b) filed August 12, 2010.

The request is **NOT APPROVED**.

The Office will no longer approve requests from practitioners to withdraw from application where the requesting practitioners is acting, or has acted, in a representative capacity pursuant to 37 CFR 1.34. In these situations, the practitioner is responsible for the correspondence the practitioner files in the application while acting in a representative capacity. As such, there is no need for the practitioner to obtain the Office's permission to withdraw from representation. However, practitioners acting in a representative capacity, like practitioners who have power of attorney in the application, remain responsible for noncompliance with 37 CFR 1.56, as well as 37 CFR 10.18, with respect to the documents they file.

A review of the file record indicates that IP Patent Docketing at K & L Gates, LLP does not have power of attorney in this patent application. See 37 C.F.R. § 10.40. Accordingly, the request to withdraw under 37 C.F.R. § 1.36(b) is not applicable.

In order to request or take action in a patent matter, the assignee must establish its ownership of the patent to the satisfaction of the Director. In this regard, a Statement under 37 CFR 3.73(b) must have either: (i) documentary evidence of a chain of title from the original owner to the assignee (*e.g.*, copy of an executed assignment), and a statement affirming that the documentary evidence of the chain of title from the original owner to the assignee was or concurrently is being submitted for recordation pursuant to § 3.11; or (ii) a statement specifying where documentary evidence of a chain of title from the original owner to the assignee is recorded in the assignment records of the Office (*e.g.*, reel and frame number).

All future communications from the Office will continue to be directed to the above-listed address until otherwise properly notified by the applicant.

Telephone inquires concerning this decision should be directed to undersigned at 571-272-1642. All other inquiries concerning the examination or status of this application should be directed to the Technology Center.

/AMW/
April M. Wise
Petitions Examiner
Office of Petitions

cc: ELECTRONIC HEALTH RECORDS CORPORATION
275 GROVE STREET
SUITE 2-400
NEWTON, MA 02466

UNITED STATES PATENT AND TRADEMARK OFFICE

Commissioner for Patents
United States Patent and Trademark Office
P. O. Box 1450
Alexandria, VA 22313-1450
www.uspto.gov

M.H.K.K.G., P.C. / ADOBE SYSTEMS INCORPORATED
Robert C. Kowert
P.O. BOX 398
AUSTIN TX 78767-0398

MAILED
APR 20 2011
OFFICE OF PETITIONS

In re Application of
Swaminathan, et al.
Application No. 12/548,228
Filed: August 26, 2009
Attorney Docket No. 6067-35900

ON PETITION

This is a decision on the petition, filed February 7, 2011, which is being treated as a petition under 37 CFR 1.137(b) to revive the instant nonprovisional application for failure to timely notify the U.S. Patent and Trademark (USPTO) of the filing of an application in a foreign country, or under a multinational treaty that requires publication of applications eighteen months after filing. *See* 37 CFR 1.137(f).

The petition is **GRANTED**.

Petitioner states that the instant nonprovisional application is the subject of an application filed in China on August 25, 2010. However, the USPTO was unintentionally not notified of this filing within 45 days subsequent to the filing of the subject application.

In view of the above, this application became abandoned pursuant to 35 U.S.C. § 122(b)(2)(B)(iii) and 37 CFR 1.213(c) for failure to timely notify the Office of the filing of an application in a foreign country or under a multilateral international agreement that requires publication of applications 18 months after filing.

A petition to revive an application abandoned pursuant to 35 U.S.C. 122(b)(2)(B)(iii) for failure to notify the USPTO of a foreign filing must be accompanied by:

(1) the required reply which is met by the notification of such filing in a foreign country or under a multinational treaty;
(2) the petition fee as set forth in 37 CFR 1.17(m); and
(3) a statement that the entire delay in filing the required reply from the due date of the reply until the filing of a grantable petition was unintentional.

The instant petition has been found to be in compliance with 37 CFR 1.137(b). Accordingly, the failure to timely notify the USPTO of a foreign or international filing within 45 days after the date of filing of such foreign or international application as provided by 35 U.S.C. § 122(b)(2)(B)(iii) and 37 CFR 1.213(c) is accepted as having been unintentionally delayed.

The previous Request and Certification under 35 U.S.C. § 122(b)(2)(B)(i) has been rescinded. A Notice Regarding Rescission of Nonpublication Request which sets forth the projected publication date of accompanies this decision on petition.

Telephone inquiries concerning this decision should be directed to the undersigned at (571) 272-3222.

This application is being forwarded to the Office of Patent Application Processing for further processing.

/Kenya A. McLaughlin/

Kenya A. McLaughlin
Petitions Attorney
Office of Petition

ATTACHMENT: Notice Regarding Rescission of Nonpublication Request

UNITED STATES PATENT AND TRADEMARK OFFICE

UNITED STATES DEPARTMENT OF COMMERCE
United States Patent and Trademark Office
Address: COMMISSIONER FOR PATENTS
P.O. Box 1450
Alexandria, Virginia 22313-1450
www.uspto.gov

APPLICATION NUMBER	FILING OR 371(C) DATE	FIRST NAMED APPLICANT	ATTY. DOCKET NO./TITLE
12/548,228	08/26/2009	Viswanathan Swaminathan	6067-35900

CONFIRMATION NO. 6710

NONPUBLICATION RESCISSION LETTER

65132
M.H.K.K.G., P.C. / ADOBE SYSTEMS INCORPORATED
Robert C. Kowert
P.O. BOX 398
AUSTIN, TX 78767-0398

OC000000047209646

Date Mailed: 04/19/2011

Communication Regarding Rescission Of Nonpublication Request and/or Notice of Foreign Filing

Applicant's rescission of the previously-filed nonpublication request and/or notice of foreign filing is acknowledged. The paper has been reflected in the Patent and Trademark Office's (USPTO's) computer records so that the earliest possible projected publication date can be assigned.

The projected publication date is 07/28/2011.

If applicant rescinded the nonpublication request before or on the date of "foreign filing,"[1] then no notice of foreign filing is required.

If applicant foreign filed the application after filing the above application and before filing the rescission, and the rescission did not also include a notice of foreign filing, then a notice of foreign filing (not merely a rescission) is required to be filed within 45 days of the date of foreign filing. See 35 U.S.C. § 122(b)(2)(B)(iii), and Clarification of the United States Patent and Trademark Office's Interpretation of the Provisions of 35 U.S.C. § 122(b)(2)(B)(ii)-(iv), 1272 Off. Gaz. Pat. Office 22 (July 1, 2003).

If a notice of foreign filing is required and is not filed within 45 days of the date of foreign filing, then the application becomes abandoned pursuant to 35 U.S.C. § 122(b)(2)(B)(iii). In this situation, applicant should either file a petition to revive or notify the Office that the application is abandoned. See 37 CFR 1.137(f). Any such petition to revive will be forwarded to the Office of Petitions for a decision. Note that the filing of the petition will not operate to stay any period of reply that may be running against the application.

Questions regarding petitions to revive should be directed to the Office of Petitions at (571) 272-3282.

[1] Note, for purpose of this notice, that "foreign filing" means "filing an application directed to the same invention in another country, or under a multilateral international agreement, that requires publication of applications 18 months after filing".

/kathornton mclaughl/

Office of Data Management, Application Assistance Unit (571) 272-4000, or (571) 272-4200, or 1-888-786-0101

UNITED STATES PATENT AND TRADEMARK OFFICE

Commissioner for Patents
United States Patent and Trademark Office
P.O. Box 1450
Alexandria, VA 22313-1450
www.uspto.gov

KNOBBE MARTENS OLSON & BEAR LLP
2040 MAIN STREET
FOURTEENTH FLOOR
IRVINE, CA 92614

MAILED

SEP 10 2010

OFFICE OF PETITIONS

In re Application of :
Tatsumi Amano et al :
Application No. 12/548,318 :
Filed: August 26, 2009 :
Attorney Docket No. UNIU79.056DV2

ON PETITION

This is a decision on the petition, filed September 9, 2010 under 37 CFR 1.313(c)(2) to withdraw the above-identified application from issue after payment of the issue fee.

The petition is **GRANTED**.

The above-identified application is withdrawn from issue for consideration of a submission under 37 CFR 1.114 (request for continued examination). See 37 CFR 1.313(c)(2).

Petitioner is advised that the issue fee paid on August 5, 2010 in the above-identified application cannot be refunded. If, however, the above-identified application is again allowed, petitioner may request that it be applied towards the issue fee required by the new Notice of Allowance.[1]

Telephone inquiries should be directed to Irvin Dingle at (571) 272-3210.

This matter is being referred to Technology Center AU 1796 for processing of the request for continued examination under 37 CFR 1.114 and for consideration of the concurrently filed Information Disclosure Statement.

/Irvin Dingle/
Irvin Dingle
Petitions Examiner
Office of Petitions

---

[1] The request to apply the issue fee to the new Notice may be satisfied by completing and returning the new Issue Fee Transmittal Form PTOL-85(b), which includes the following language thereon: Commissioner for Patents is requested to apply the Issue Fee and Publication Fee (if any) or re-apply any previously paid issue fee to the application identified above. Petitioner is advised that, whether a fee is indicated as being due or not, the Issue Fee Transmittal Form **must** be completed and timely submitted to avoid abandonment. Note the language in bold text on the first page of the Notice of Allowance and Fee(s) Due (PTOL-85).

SPE RESPONSE FOR CERTIFICATE OF CORRECTION

DATE : February 21, 2012

TO SPE OF : ART UNIT 1761

SUBJECT : Request for Certificate of Correction for Appl. No.: 12/548318 Patent No.: 7989525

Co f C mailroom date: 2-8-12

Please respond to this request for a certificate of correction within 7 days.

FOR IFW FILES:

Please review the requested changes/corrections as shown in the **COCIN** document(s) in the IFW application image. No new matter should be introduced, nor should the scope or meaning of the claims be changed.

Please complete the response (see below) and forward the completed response to scanning using document code **COCX**.

FOR PAPER FILES:

Please review the requested changes/corrections as shown in the attached certificate of correction. Please complete this form (see below) and forward it with the file to:

Certificates of Correction Branch (CofC)
Randolph Square – 9D10-A
Palm Location 7580

Note: _____

_____

Magdalene Talley
Certificates of Correction Branch
571-272-0423 _____

Thank You For Your Assistance

The request for issuing the above-identified correction(s) is hereby:
Note your decision on the appropriate box.

X Approved	**All** changes apply.
☐ **Approved in Part**	Specify below which changes **do not** apply.
☐ **Denied**	State the reasons for denial below.

Comments: OK to enter

/Harold Pyon/ AU 1761

SPE **Art Unit**

PTO/SB/20PCT-KR (06-10)
Approved for use through 01/31/2012. OMB 0651-0058
U.S. Patent and Trademark Office; U. S. DEPARTMENT OF COMMERCE
Under the Paperwork Reduction Act of 1995, no persons are required to respond to a collection of information unless it displays a valid OMB control number.

REQUEST FOR PARTICIPATION IN THE PATENT COOPERATION TREATY - PATENT PROSECUTION HIGHWAY (PCT-PPH) PILOT PROGRAM BETWEEN THE KOREAN INTELLECTUAL PROPERTY OFFICE (KIPO) AND THE USPTO

Application No:	12548410	Filing date:	2009-08-26
First Named Inventor:	Michael Milbourne		
Title of the Invention:	A Heat Spreading Shield		

THIS REQUEST FOR PARTICIPATION IN THE PCT-PPH PILOT PROGRAM ALONG WITH THE REQUIRED DOCUMENTS MUST BE SUBMITTED VIA EFS-WEB. INFORMATION REGARDING EFS-WEB IS AVAILABLE AT HTTP://WWW.USPTO.GOV/EBC/EFS_HELP.HTML

APPLICANT HEREBY REQUESTS PARTICIPATION IN THE PCT-PPH PROGRAM AND PETITIONS TO MAKE THE ABOVE-IDENTIFIED APPLICATION SPECIAL UNDER THE PCT-PPH PROGRAM.

The above-identified application is (1) a national stage entry of the corresponding PCT application, or (2) a national stage entry of another PCT application which claims priority to the corresponding PCT application, or (3) a national application that claims domestic/ foreign priority to the corresponding PCT application, or (4) a national application which forms the basis for the priority claim in the corresponding PCT application, or (5) a continuing application of a U.S. application that satisfies one of (1) to (4) above, or (6) a U.S. application that claims domestic benefit to a U.S. provisional application which forms the basis for the priority claim in the corresponding PCT application.

The corresponding PCT application number(s) is/are: PCT/US09/67041

The international date of the corresponding PCT application(s) is/are: 2009-12-07

I. List of Required Documents:

a. **A copy of the latest international work product (WO/ISA, WO/IPEA, or IPER) in the above–identified corresponding PCT application(s)**

- [x] Is attached.
- [ ] Is not attached because the document is already in the U.S. application.

b. **A copy of all claims which were indicated as having novelty, inventive step and industrial applicability in the above-identified corresponding PCT application(s).**

- [x] Is attached.
- [ ] Is not attached because the document is already in the U.S. application.

c. **English translations of the documents in a. and b. above are attached (if the documents are not in the English language). A statement that the English translation is accurate is attached for the document in b. above.**

This collection of information is required by 35 U.S.C. 119, 37 CFR 1.55, and 37 CFR 1.102(d). The information is required to obtain or retain a benefit by the public, which is to file (and by the USPTO to process) an application. Confidentiality is governed by 35 U.S.C. 122 and 37 CFR 1.11 and 1.14. This collection is estimated to take 2 hours to complete, including gathering, preparing, and submitting the completed application form to the USPTO. Time will vary depending upon the individual case. Any comments on the amount of time you require to complete this form and/or suggestions for reducing this burden should be sent to the Chief Information Officer, U.S. Patent and Trademark Office, U.S. Department of Commerce, P.O. Box 1450, Alexandria, VA 22313-1450. DO NOT SEND FEES OR COMPLETED FORMS TO THIS ADDRESS.

Approved for use through 01/31/2012. OMB 0651-0058
U.S.Patent and Trademark Office; U.S. DEPARTMENT OF COMMERCE
Under the Paperwork Reduction Act of 1995, no persons are required to respond to a collection of information unless it displays a valid OMB control number.

REQUEST FOR PARTICIPATION IN THE PCT-PPH PILOT PROGRAM BETWEEN THE KIPO AND THE USPTO

(continued)

Application No.:	12548410
First Named Inventor:	Michael Milbourne

d. **(1) An information disclosure statement listing the documents cited in the international work products (ISR, WO/ISA, WO/IPEA, IPER) of the corresponding PCT application.**

☐ Is attached

☒ Has already been filed in the above-identified U.S. application on 2010-08-20

(2) Copies of all documents (except) for U.S. patents or U.S. patent application publications)

☒ Are attached.

Have already been filed in the above-identified U.S. application on 2010-08-20

II. Claims Correspondence Table:

Claims in US Application	Patentable Claims in the corresponding PCT Application	Explanation regarding the correspondence
1-20	1-20	Patentable claims in the corresponding PCT application are
		the same as the claims in the US application

III. All the claims in the US application sufficiently correspond to the patentable claims in the corresponding PCT application.

Signature /Kathy A. Wojtalewicz/	Date 11/24/2010
Name (Print/Typed) Kathy A. Wojtalewicz	Registration Number 64266

Privacy Act Statement

The **Privacy Act of 1974 (P.L. 93-579)** requires that you be given certain information in connection with your submission of the attached form related to a patent application or patent. Accordingly, pursuant to the requirements of the Act, please be advised that: (1) the general authority for the collection of this information is 35 U.S.C. 2(b)(2); (2) furnishing of the information solicited is voluntary; and (3) the principal purpose for which the information is used by the U.S. Patent and Trademark Office is to process and/or examine your submission related to a patent application or patent. If you do not furnish the requested information, the U.S. Patent and Trademark Office may not be able to process and/or examine your submission, which may result in termination of proceedings or abandonment of the application or expiration of the patent.

The information provided by you in this form will be subject to the following routine uses:

1. The information on this form will be treated confidentially to the extent allowed under the Freedom of Information Act (5 U.S.C. 552) and the Privacy Act (5 U.S.C 552a). Records from this system of records may be disclosed to the Department of Justice to determine whether disclosure of these records is required by the Freedom of Information Act.
2. A record from this system of records may be disclosed, as a routine use, in the course of presenting evidence to a court, magistrate, or administrative tribunal, including disclosures to opposing counsel in the course of settlement negotiations.
3. A record in this system of records may be disclosed, as a routine use, to a Member of Congress submitting a request involving an individual, to whom the record pertains, when the individual has requested assistance from the Member with respect to the subject matter of the record.
4. A record in this system of records may be disclosed, as a routine use, to a contractor of the Agency having need for the information in order to perform a contract. Recipients of information shall be required to comply with the requirements of the Privacy Act of 1974, as amended, pursuant to 5 U.S.C. 552a(m).
5. A record related to an International Application filed under the Patent Cooperation Treaty in this system of records may be disclosed, as a routine use, to the International Bureau of the World Intellectual Property Organization, pursuant to the Patent Cooperation Treaty.
6. A record in this system of records may be disclosed, as a routine use, to another federal agency for purposes of National Security review (35 U.S.C. 181) and for review pursuant to the Atomic Energy Act (42 U.S.C. 218(c)).
7. A record from this system of records may be disclosed, as a routine use, to the Administrator, General Services, or his/her designee, during an inspection of records conducted by GSA as part of that agency's responsibility to recommend improvements in records management practices and programs, under authority of 44 U.S.C. 2904 and 2906. Such disclosure shall be made in accordance with the GSA regulations governing inspection of records for this purpose, and any other relevant (*i.e.*, GSA or Commerce) directive. Such disclosure shall not be used to make determinations about individuals.
8. A record from this system of records may be disclosed, as a routine use, to the public after either publication of the application pursuant to 35 U.S.C. 122(b) or issuance of a patent pursuant to 35 U.S.C. 151. Further, a record may be disclosed, subject to the limitations of 37 CFR 1.14, as a routine use, to the public if the record was filed in an application which became abandoned or in which the proceedings were terminated and which application is referenced by either a published application, an application open to public inspection or an issued patent.
9. A record from this system of records may be disclosed, as a routine use, to a Federal, State, or local law enforcement agency, if the USPTO becomes aware of a violation or potential violation of law or regulation.

Copy of all claims which were indicated as having Novelty, Inventive Step and Industrial applicability in the corresponding PCT application

1. A heat conducting system for a solar energy device comprising:

a hollow curved mirror having a convex side, a concave side, an aperture and a first conductance;

a shield conforming to the convex side of the mirror and surrounding a portion of the opening, the shield having a second conductance; and

a photovoltaic cell for converting solar radiation into electrical energy;

wherein the second conductance of the shield is greater than the first conductance of the mirror, and wherein the shield is thermally isolated from the photovoltaic cell.

2. The heat conducting system of Claim 1 wherein the shield is comprised of metal tape.

3. The heat conducting system of Claim 1 wherein the hollow curved mirror has a thickness less than 5 mm.

4. The heat conducting system of Claim 1 wherein the shield is comprised of a stamped metal disk having an aperture.

5. The heat conducting system of Claim 1 wherein the shield is comprised of a layer of material affixed to the mirror by thermal spraying.

6. The heat conducting system of Claim 2 wherein the metal tape is comprised of one or more strips surrounding the aperture, wherein the strips have ends.

7. The heat conducting system of Claim 6 wherein the ends of the metal strips are separated by a gap or seam.

8. The heat conducting system of Claim 6 further comprising an array of solar energy devices, wherein sides of the array are oriented relative to the axis of the sun's rays,

and wherein the ends of the tape are oriented to minimize off-axis irradiation impinging at the ends.

9. The heat conducting of system of Claim 7, wherein the gap or seam is less than 1 inch wide.

10. The heat conducting system of Claim 8 wherein the ends of the metal tape are oriented at a 43°- 47° angle relative to a side of the array of solar energy devices.

11. The heat conducting system of Claim 2 wherein the metal tape is comprised of a metal selected from the group consisting of aluminum, silver, gold, copper, steel and iron.

12. The heat conducting system of Claim 2 wherein the metal tape is affixed to the mirror with an adhesive.

13. The heat conducting system of Claim 1 wherein the shield overhangs the aperture.

14. The heat conducting system of Claim 1 wherein the shield further comprises a polymer layer.

15. The heat conducting system of Claim 14 wherein the polymer layer has a higher thermal emissivity than the shield.

16. The heat conducting system of claim 1 wherein the shield has a thickness which smoothly decreases toward an edge of the shield.

17. A method for reducing the temperature differential over a portion of a concentrating solar mirror comprising:

providing a hollow curved mirror and a photovoltaic cell, wherein the mirror comprises a concave side, a convex side, and an aperture; and

fixing a shield to a portion of the convex side of the mirror;

thermally isolating the shield from the photovoltaic cell;

wherein the shield comprises a heat conducting material surrounding a portion of the opening conforming to the shape of the curved mirror.

18. The method Claim 17 wherein the heat conducting material comprises a metal tape.

19. The method Claim 17 wherein the metal tape comprises one or more strips separated by a gap.

20. The method Claim 17 wherein the gap is oriented at a 43°- 47° angle relative to the path of the sun.

UNITED STATES PATENT AND TRADEMARK OFFICE

UNITED STATES DEPARTMENT OF COMMERCE
United States Patent and Trademark Office
Address: COMMISSIONER FOR PATENTS
P.O. Box 1450
Alexandria, Virginia 22313-1450
www.uspto.gov

APPLICATION NO.	FILING DATE	FIRST NAMED INVENTOR	ATTORNEY DOCKET NO.	CONFIRMATION NO.
12/548,410	08/26/2009	Michael Milbourne	SolfP160/SF-P179B	7077

67362 7590 01/14/2011
THE MUELLER LAW OFFICE, P.C.
12951 Harwick Lane
San Diego, CA 92130

EXAMINER

ART UNIT	PAPER NUMBER
1725	

NOTIFICATION DATE	DELIVERY MODE
01/14/2011	ELECTRONIC

Please find below and/or attached an Office communication concerning this application or proceeding.

The time period for reply, if any, is set in the attached communication.

Notice of the Office communication was sent electronically on above-indicated "Notification Date" to the following e-mail address(es):

heather@themuellerlawoffice.com
contact@themuellerlawoffice.com
docket@themuellerlawoffice.com

UNITED STATES PATENT AND TRADEMARK OFFICE

Commissioner for Patents
United States Patent and Trademark Office
P.O. Box 1450
Alexandria, VA 22313-1450
www.uspto.gov

CT

JAN 14 2011

In re application of Michael Milbourne et al Serial No. 12/548,410 Filed: August 26, 2009 For: HEAT SPREADING SHIELD	: : : : : : :	DECISION ON REQUEST TO PARTICIPATE IN PATENT PROSECUTION HIGHWAY PROGRAM AND PETITION TO MAKE SPECIAL UNDER 37 CFR 1.102(a)

This is a decision on the request to participate in the PCT Patent Prosecution Highway (PCT-PPH) pilot program and the petition under 37 CFR 1.102(a), filed November 27, 2010, to make the above-identified application special.

The request and petition are **GRANTED**.

A grantable request to participate in the PCT-PPH pilot program and petition to make special require:

(1) The U.S. application must disclose an eligible relationship to one or more PCT applications where the ISA or IPEA are the JPO, EPO, USPTO or KIPO;

(2) At least one claim in the PCT application has novelty, inventive step, and industrial applicability and must be free of any observations in Box VIII in the latest work product in the international stage or applicant must identify and explain why the claim(s) is/are not subject to the observation in Box VIII;

(3) Applicant must submit a copy of the claim(s) from the PCT application(s) that have novelty, inventive step, and industrial applicability along with an English translation thereof and a statement that the English translation is accurate, if the claims are not in the English language;

(4) Applicant must submit a claims correspondence table in English and all the independent claims in the U.S. application must sufficiently correspond or be amended to sufficiently correspond to the claim(s) that have novelty, inventive step, and industrial applicability in the PCT application(s);

(5) Examination of the U.S. application has not begun;

(6) Applicant must submit a copy of the latest international work product from the PCT application indicating that the claim(s) have novelty, inventive step, and industrial

applicability along with an English translation thereof if the latest international work product is not in the English language; and

(7) Applicant must submit an IDS listing the documents cited by the PCT examiner in the international work product along with copies of documents except U.S. patents or U.S. patent application publications.

The request to participate in the PPH program and petition comply with the above requirements. Accordingly, the above-identified application has been accorded "special" status.

The application is being forwarded to the examiner for action on the merits commensurate with this decision.

Any inquiry regarding this decision should be directed to Christine Tierney, Quality Assurance Specialist, at (571) 272-1055.

All other inquiries concerning the examination or status of the application is accessible in the PAIR system at http://www.uspto.gov/ebc/index.html.

/Christine Tierney/

Christine Tierney
Quality Assurance Specialist
Technology Center 1700

UNITED STATES PATENT AND TRADEMARK OFFICE

Commissioner for Patents
United States Patent and Trademark Office
P.O. Box 1450
Alexandria, VA 22313-1450
www.uspto.gov

IBM CORPORATION, T.J. WATSON RESEARCH CENTER
P.O. BOX 218
YORKTOWN HEIGHTS NY 10598

MAILED

FEB 08 2011

OFFICE OF PETITIONS

In re Application of	:	
Ben-Yehuda et al.	:	
Application No. 12/548,437	:	ON PETITION
Filed: August 27, 2009	:	
Attorney Docket No. IL920060042US2	:	

This is a decision on the petition under 37 CFR §§ 1.78(a)(3), filed December 20, 2010, to accept an unintentionally delayed claim under 35 U.S.C. §§ 120 for the benefit of the prior-filed nonprovisional application set forth in the concurrently filed amendment.

The petition is **DISMISSED AS MOOT**.

A petition under 37 CFR §§ 1.78(a)(3) is only applicable to those applications filed on or after November 29, 2000.

Along with the instant petition under 37 CFR §§ 1.78(a)(3), petitioner has submitted an amendment to the first sentence of the specification following the title to include a reference to the prior-filed application.

The instant pending nonprovisional application was filed on August 27, 2009, and was pending at the time of filing of the instant petition. While a reference to the prior-filed application was not included in the first sentence of the specification following the title, upon filing, nevertheless the reference was included in the Application Data Sheet (ADS) filed August 27, 2009 with the above-identified application.

The current procedure where a claim for priority under 37 CFR §§ 1.78(a)(3) is not included in the first sentence of the specification but does appear either in the ADS, oath or declaration or a transmittal letter filed with the application and the Office notes the claim for priority, no petition will be required to accept a late claim for priority. This is because the application would have been scheduled for publication on the basis of the information concerning the claim submitted elsewhere in the application within the time period set forth in 37 CFR §§ 1.78(a)(2)(ii). However, on the other hand, if the USPTO does not note the claim for priority to the prior-filed application(s) set forth in the ADS, oath or declaration or transmittal letter submitted with the application, a petition will be

required to accept a late claim for priority under 37 CFR §§ 1.78(a)(3.[1] In the instant case, the Office noted the claim for priority of the prior-filed application in the ADS filed with the application, as shown by its inclusion on the filing receipt mailed September 14, 2009.

In view of the above, the $1,410.00 petition fee submitted is unnecessary and will be refunded to petitioner's deposit account in due course.

Any questions concerning this decision on petition may be directed to Joan Olszewski at (571) 272-7751. All other inquiries concerning either the examination procedures or status of the application should be directed to the Technology Center.

This matter is being referred to the Examiner of Technology Center AU 2168 for appropriate action on the amendment filed December 20, 2010, including consideration of the claim under 35 U.S.C. § 120 and 37 CFR 1.78(a)(2) for benefit of the prior-filed application.

/Liana Walsh/
Liana Walsh
Petitions Examiner
Office of Petitions

[1] *Note* MPEP 201.11 (V), page 200-75 (Rev. 1. Feb. 2004 and 66 Federal Register 67087 at 67089 (Dec. 28, 2001), effective December 28, 2001.

UNITED STATES PATENT AND TRADEMARK OFFICE

Commissioner for Patents
United States Patent and Trademark Office
P.O. Box 1450
Alexandria, VA 22313-1450
www.uspto.gov

MR. HANSEN SWANIKER
12 WAPPING DRIVE,
BRISTOL, RI 02809

MAILED

AUG 3 0 2010

OFFICE OF PETITIONS

In re Application of
Chirag B. Shah et al
Application No. 12/548,532
Filed: August 27, 2009
For: ANTIMICROBIAL FOAM COMPOSITIONS, ARTICLES AND METHODS

Dear Mr. Swaniker:

You are named as a joint inventor in the above-identified United States patent application, filed under the provisions of 35 U.S.C. 116 (United States Code), and 37 CFR 1.47(a), Rules of Practice in Patent Cases. Should a patent be granted on the application you will be designated therein as a joint inventor.

As a named inventor you are entitled to inspect any paper in the file wrapper of the application, order copies of all or any part thereof (at a prepaid cost per 37 CFR 1.19) or make your position of record in the application. Alternatively, you may arrange to do any of the preceding through a registered patent attorney or agent presenting written authorization from you. If you care to join the application, counsel of record (see below) would presumably assist you. Joining the application would entail the filing of an appropriate oath or declaration by you pursuant to 37 CFR 1.63.

Telephone inquiries regarding this communication should be directed to the undersigned at (571) 272-3208. Requests for information regarding your application should be directed to the File Information Unit at (703) 308-2733. Information regarding how to pay for and order a copy of the application, or a specific paper in the application, should be directed to the Certification Division at (571) 272-3150 or 1 (800) 972-6382 (outside the Washington, DC area).

/KOC/
Karen Creasy
Petitions Examiner
Office of Petitions

cc:

TYCOHEALTHCARE GROUP LP
15 HAMPSHIRE STREET
MANSFIELD MA 02048

MR. HANSEN SWANIKER
BARRINGTON PARK CONDOMINIUMS
2801 CHANCELLORSVILLE DRIVE
UNIT 1228
TALLAHASSEE, FL 32312

UNITED STATES PATENT AND TRADEMARK OFFICE

Commissioner for Patents
United States Patent and Trademark Office
P.O. Box 1450
Alexandria, VA 22313-1450
www.uspto.gov

OPPENHEIMER WOLFF & DONNELLY LLP
45 SOUTH SEVENTH STREET, SUITE 3300
MINNEAPOLIS, MN 55402

MAILED

FEB 22 2011

OFFICE OF PETITIONS

In re Application of :
Douglas S. Cali et al :
Application No. 12/548,536 :
Filed: August 27, 2009 :
Attorney Docket No. 22561-3424/US/8

NOTICE

This is a notice regarding your request for acceptance of a fee deficiency submission under 37 CFR 1.28. On September 1, 1998, the Court of Appeals for the Federal Circuit held that 37 CFR 1.28(c) is the sole provision governing the time for correction of the erroneous payment of the issue fee as a small entity. **See DH Technology v. Synergystex International, Inc. 154 F.3d 1333, 47 USPQ2d 1865 (Fed. Cir. Sept. 1, 1998).**

The Office no longer investigates or rejects original or reissue applications under 37 CFR 1.56. **1098 Off. Gaz. Pat. Office 502 (January 3, 1989)**. Therefore, nothing in this Notice is intended to imply that an investigation was done.

Your fee deficiency submission under 37 CFR 1.28 is hereby **ACCEPTED**.

The file does not indicate a change of address has been submitted, although the address given on the petition differs from the address of record. If appropriate, a change of address should be filed in accordance with MPEP 601.03. A courtesy copy of this decision is being mailed to the address given on the petition; however, the Office will mail all future correspondence solely to the address of record.

Inquiries related to this communication should be directed to Irvin Dingle at (571) 272-3210.

Irvin Dingle
Petitions Examiner
Office of Petitions

cc: Jeffrey J. Hohenshell
710 Medtronic Parkway
Minneapolis, MN 55432

UNITED STATES PATENT AND TRADEMARK OFFICE

UNITED STATES DEPARTMENT OF COMMERCE
United States Patent and Trademark Office
Address: COMMISSIONER FOR PATENTS
P.O. Box 1450
Alexandria, Virginia 22313-1450
www.uspto.gov

APPLICATION NO.	FILING DATE	FIRST NAMED INVENTOR	ATTORNEY DOCKET NO.	CONFIRMATION NO.
12/548,585	08/27/2009	Akira Miyoshi	02410463AA	7389

7590 08/18/2010
WHITHAM, CURTIS & CHRISTOFFERSON & COOK, P.C.
11491 SUNSET HILLS ROAD
SUITE 340
RESTON, VA 20190

EXAMINER
OWENS, DOUGLAS W

ART UNIT	PAPER NUMBER
2821	

MAIL DATE	DELIVERY MODE
08/18/2010	PAPER

DECISION GRANTING PETITION UNDER 37 CFR 1.138(d)

The declaration of express abandonment is recognized

This is in response to the petition under 37 CFR 1.138(d), requesting for a refund of any previously paid search fee and excess claims fee in the above-identified application.

The petition is granted.

The express abandonment is recognized. Any previously paid search fee and excess claims fee are hereby refunded.

Telephone inquiries should be directed to the Office of Data Management at (571) 272-4200.

Mimi Farmer

Patent Publication Branch
Office of Data Management

FORM PET651G (Rev. 08/07)

UNITED STATES PATENT AND TRADEMARK OFFICE

Commissioner for Patents
United States Patent and Trademark Office
P.O. Box 1450
Alexandria, VA 22313-1450
www.uspto.gov

MICHAEL P. MORRIS
BOEHRINGER INGELHEIM USA CORPORATION
900 RIDGEBURY ROAD
RIDGEFIELD CT 06877-0368

MAILED
JUN 08 2011
OFFICE OF PETITIONS

In re Application of	:	
Roof et al.	:	
Application No. 12/548,597	:	DECISION ON PETITION
Filed: August 27, 2009	:	
Attorney Docket No. 10-0064-3-C3	:	

This is a decision on the petition under the unintentional provisions of 37 CFR 1.137(b), filed April 13, 2011, to revive the above-identified application.

The petition is **GRANTED**.

The application became abandoned for failure to reply in a timely manner to the non-final Office action mailed, October 5, 2010, which set a shortened statutory period for reply of three (3) months. No extensions of time under the provisions of 37 CFR 1.136(a) were timely obtained. Accordingly, the application became abandoned on January 6, 2011. A Notice of Abandonment was mailed April 22, 2011.

The petition satisfies the requirements of 37 CFR 1.137(b) in that petitioner has supplied (1) the reply in the form of a Continuing application, (2) the petition fee of $1,620.00, and (3) a proper statement of unintentional delay.

The above-identified application is being revived solely for purposes of continuity. As continuity has been established by this decision reviving the above-identified application, the above-identified application is again abandoned in favor of continuing Application No. 13/085,692, filed April 13, 2011.

It is not apparent whether the statement of unintentional delay was signed by a person who would have been in a position of knowing that the **entire** delay in filing the required reply from the due date for the reply until the filing of a grantable petition pursuant to 37 CFR 1.137(b) was unintentional. Nevertheless, in accordance with 37 CFR 10.18, the statement is accepted as constituting a certification of unintentional delay. However, in the event that petitioner has no knowledge that the delay was unintentional, petitioner must make such an inquiry to ascertain that, in fact, the delay was

unintentional. If petitioner discovers that the delay was intentional, petitioner must notify the Office. Further, it is not apparent whether the person signing the instant petition was ever given a power of attorney or authorization of agent to prosecute this patent application. In accordance with 37 CFR 1.34(a), the signature appearing on the petition shall constitute a representation to the United States Patent and Trademark Office that he/she is authorized to represent the particular party in whose behalf he/she acts. A courtesy copy of this decision is being mailed to the address given on the petition; however, the Office will mail all future correspondence solely to the address of record.

Additionally, an extension of time under 37 CFR 1.136 must be filed prior to the expiration of the maximum extendable period for reply. *See* In re Application of S., 8 USPQ2d 1630, 1631 (Comm'r Pats. 1988). Since the $1,110.00, three- month extension of time fee submitted with the petition on April 13, 2011 was subsequent to the maximum extendable period for reply, this fee is unnecessary and will be refunded to petitioner's deposit account in due course.

Telephone inquiries concerning this decision should be directed to the undersigned at (571) 272-7751.

/Joan Olszewski/
Joan Olszewski
Petitions Examiner
Office of Petitions

cc: Nabeela R. McMillian
McAndrews, Held & Malloy Ltd.
500 W. Madison St., 34th Floor
Chicago, IL 60661

UNITED STATES PATENT AND TRADEMARK OFFICE

Commissioner for Patents
United States Patent and Trademark Office
P.O. Box 1450
Alexandria, VA 22313-1450
www.uspto.gov

ALBERT W. WATKINS
30844 NE 1ST AVENUE
ST. JOSEPH MN 56374

MAILED

OCT 24 2011

OFFICE OF PETITIONS

In re Application of	:	
Curtis R. Sauer	:	
Application No. 12/548,627	:	DECISION ON PETITION
Filed: August 27, 2009	:	UNDER 37 CFR 1.137(b)
Attorney Docket No. SAUERRIBSPREAD	:	

This is a decision on the petition, filed August 29, 2011, which is being treated as a petition under 37 CFR 1.137(b) to revive the instant nonprovisional application for failure to timely notify the U.S. Patent and Trademark (USPTO) of the filing of an application in a foreign country, or under a multinational treaty that requires publication of applications eighteen months after filing. *See* 37 CFR 1.137(f).

The petition is **GRANTED**.

Petitioner states that the instant nonprovisional application is the subject of an application filed in an eighteen-month publication country on August 27, 2010. However, the USPTO was unintentionally not notified of this filing within 45 days subsequent to the filing of the subject application in an eighteen-month publication country.

In view of the above, this application became abandoned pursuant to 35 U.S.C. § 122(b)(2)(B)(iii) and 37 CFR 1.213(c) for failure to timely notify the Office of the filing of an application in a foreign country or under a multilateral international agreement that requires publication of applications 18 months after filing.

A petition to revive an application abandoned pursuant to 35 U.S.C. 122(b)(2)(B)(iii) for failure to notify the USPTO of a foreign filing must be accompanied by:

(1) the required reply which is met by the notification of such filing in a foreign country or under a multinational treaty;
(2) the petition fee as set forth in 37 CFR 1.17(m); and
(3) a statement that the entire delay in filing the required reply from the due date of the reply until the filing of a grantable petition was unintentional.

The instant petition has been found to be in compliance with 37 CFR 1.137(b). Accordingly, the failure to timely notify the USPTO of a foreign or international filing within 45 days after the date of filing of such foreign or international application as provided by 35 U.S.C. § 122(b)(2)(B)(iii) and 37 CFR 1.213(c) is accepted as having been unintentionally delayed.

The previous Request and Certification under 35 U.S.C. § 122(b)(2)(B)(i) has been rescinded. A Notice Regarding Rescission of Nonpublication Request which sets forth the projected publication date of January 26, 2012 accompanies this decision on petition.

Telephone inquiries concerning this decision should be directed to Terri Johnson at (571) 272-2991.

This application is being referred to Technology Center Art Unit 3643 for examination in due course.

/Terri Johnson/
Terri Johnson
Petitions Examiner
Office of Petitions

ATTACHMENT: Notice Regarding Rescission of Nonpublication Request

UNITED STATES PATENT AND TRADEMARK OFFICE

UNITED STATES DEPARTMENT OF COMMERCE
United States Patent and Trademark Office
Address: COMMISSIONER FOR PATENTS
P.O. Box 1450
Alexandria, Virginia 22313-1450
www.uspto.gov

APPLICATION NUMBER	FILING OR 371(C) DATE	FIRST NAMED APPLICANT	ATTY. DOCKET NO./TITLE
12/548,627	08/27/2009	Curtis R. Sauer	SAUERRIBSPREAD

CONFIRMATION NO. 7468

27119
ALBERT W. WATKINS
30844 NE 1ST AVENUE
ST. JOSEPH, MN 56374

NONPUBLICATION RESCISSION LETTER

OC000000050464318

Date Mailed: 10/19/2011

Communication Regarding Rescission Of Nonpublication Request and/or Notice of Foreign Filing

Applicant's rescission of the previously-filed nonpublication request and/or notice of foreign filing is acknowledged. The paper has been reflected in the Patent and Trademark Office's (USPTO's) computer records so that the earliest possible projected publication date can be assigned.

The projected publication date is 01/26/2012.

If applicant rescinded the nonpublication request before or on the date of "foreign filing,"[1] then no notice of foreign filing is required.

If applicant foreign filed the application after filing the above application and before filing the rescission, and the rescission did not also include a notice of foreign filing, then a notice of foreign filing (not merely a rescission) is required to be filed within 45 days of the date of foreign filing. See 35 U.S.C. § 122(b)(2)(B)(iii), and Clarification of the United States Patent and Trademark Office's Interpretation of the Provisions of 35 U.S.C. § 122(b)(2)(B)(ii)-(iv), 1272 Off. Gaz. Pat. Office 22 (July 1, 2003).

If a notice of foreign filing is required and is not filed within 45 days of the date of foreign filing, then the application becomes abandoned pursuant to 35 U.S.C. § 122(b)(2)(B)(iii). In this situation, applicant should either file a petition to revive or notify the Office that the application is abandoned. See 37 CFR 1.137(f). Any such petition to revive will be forwarded to the Office of Petitions for a decision. Note that the filing of the petition will not operate to stay any period of reply that may be running against the application.

Questions regarding petitions to revive should be directed to the Office of Petitions at (571) 272-3282.

[1] Note, for purpose of this notice, that "foreign filing" means "filing an application directed to the same invention in another country, or under a multilateral international agreement, that requires publication of applications 18 months after filing".

/tsjohnson/

Office of Data Management, Application Assistance Unit (571) 272-4000, or (571) 272-4200, or 1-888-786-0101

UNITED STATES PATENT AND TRADEMARK OFFICE

Commissioner for Patents
United States Patent and Trademark Office
P.O. Box 1450
Alexandria, VA 22313-1450
www.uspto.gov

MAILED
FEB 22 2012
OFFICE OF PETITIONS

SIEMENS CORPORATION
SANDRA BAKER
170 WOOD AVENUE SOUTH
ISELIN NJ 08830

In re Application of	:	
SHORE	:	
Application No. 12/548,686	:	DECISION ON PETITION
Filed: August 27, 2009	:	TO MAKE SPECIAL UNDER
Attorney Docket No. 2009P13678 US;D-1250	:	37 CFR 1.102(c)(1)
	:	

This is a decision on the petition under 37 CFR 1.102(c)(1), filed January 30, 2012, to make the above-identified application special based on applicant's age as set forth in M.P.E.P. § 708.02, Section IV.

The petition is **DISMISSED**.

A grantable petition to make an application special under 37 CFR 1.102(c)(1) and MPEP § 708.02, Section IV: Applicant's Age, must be accompanied by evidence showing that at least one of the applicants is 65 years of age, or more, such as a birth certificate or a statement by applicant. No fee is required.

The statement submitted by the attorney on January 30, 2012, does not appear to include a proper S-signature. In this regard, the signature of Attorney Seyed Kaveh E. Rashidi-Yazd cannot be accepted because the Office is unable to determine if the attorney's name includes a second single slash mark after the S-signature. See 37 CFR 1.4(d)(2). Any future submissions should include a proper signature.

Petitioner/applicant is cautioned to avoid submitting personal information in documents filed in a patent application that may contribute to identity theft. Personal information such as social security numbers, bank account numbers, or credit card numbers (other than a check or credit card authorization form PTO-2038 submitted for payment purposes) is never required by the USPTO to support a petition or an application. If this type of personal information is included in documents submitted to the USPTO, petitioners/applicants should consider redacting such personal information from the documents before submitting them to the USPTO. Petitioner/applicant is advised that the record of a patent application is available to the public after publication of the application (unless a non-publication request in compliance with 37 CFR 1.213(a) is made in the application) or issuance of a patent. Furthermore, the record from an abandoned application may also be available to the public if the application is referenced in a published application or an issued patent (see 37 CFR 1.14).

Further correspondence with respect to this matter should be addressed as follows:

By Mail: Mail Stop PETITION
Commissioner for Patents

P. O. Box 1450
Alexandria, VA 22313-1450

By hand: U. S. Patent and Trademark Office
Customer Service Window, Mail Stop Petitions
Randolph Building
401 Dulany Street
Alexandria, VA 22314

By FAX: (571) 273-8300

Telephone inquiries concerning this decision should be directed to the undersigned at (571) 272-6735.

All other inquiries concerning the examination or status of the application is accessible in the PAIR system at http://www.uspto.gov/ebc.index.html.

The application is being referred to Technology Center 3725 for processing in its regular turn.

/Diane Goodwyn/
Diane Goodwyn
Petitions Examiner
Office of Petitions

UNITED STATES PATENT AND TRADEMARK OFFICE

Commissioner for Patents
United States Patent and Trademark Office
P.O. Box 1450
Alexandria, VA 22313-1450
www.uspto.gov

MAILED

MAY 23 2011

OFFICE OF PETITIONS

PATENT PROCUREMENT SERVICES
3200 COOLIDGE HIGHWAY, SUITE A
BERKLEY MI 48072

In re Application of :
Zhou Jinkun :
Application No. 12/548,696 : ON PETITION
Filed: August 27, 2009 :
Attorney Docket No. GFC.10002/38 :

This is a decision regarding your request under 37 CFR 1.28. for acceptance of a fee deficiency submission filed May 12, 2011.

On September 1, 1998, the Court of Appeals for the Federal Circuit held that 37 CFR 1.28(c) is the sole provision governing the time for correction of the erroneous payment of the issue fee as a small entity. See DH Technology v. Synergystex International, Inc.. 154 F.33d 1333, 47 USPQ2d 1865 (Fed. Cir. Sept. 1, 1998).

The Office no longer investigates or rejects original or reissue applications under 37 CFR 1.56. 1098 Off. Gaz. Pat. Office 502 (January 3, 1989). Therefore nothing in this Notice is intended to imply that an investigation was done.

Petitioner is advised that there is no fee for the request under 37 CFR 1.28. Your fee deficiency submission in the amount of $693, under 37 CFR 1.28, is hereby accepted and the petition is **GRANTED**.

Inquiries related to this communication should be directed to the Office of Petitions Staff at (571) 272-3282.

Patricia Faison-Ball

Patricia Faison-Ball
Senior Petitions Attorney
Office of Petitions

UNITED STATES PATENT AND TRADEMARK OFFICE

Commissioner for Patents
United States Patent and Trademark Office
P.O. Box 1450
Alexandria, VA 22313-1450
www.uspto.gov

Woodard, Emhardt, Moriarty, McNett & Henry LLP
Roche Diagnostics
111 Monument Circle, Suite 3700
Indianapolis, IN 46204-5137

MAILED
JAN 14 2011
OFFICE OF PETITIONS

In re Application of	:	
Terry A. BEATY, et *al.*	:	
Application No. 12/548,707	:	DECISION GRANTING PETITION
Filed: August 27, 2009	:	UNDER 37 CFR 1.313(c)(2)
Attorney Docket No. **007404-001026 23094 US1**	:	

This is a decision on the petition under 37 CFR 1.313(c)(2), filed January 14, 2011, to withdraw the above-identified application from issue after payment of the issue fee.

The petition is **GRANTED**.

The above-identified application is withdrawn from issue for consideration of a submission under 37 CFR 1.114 (request for continued examination). See 37 CFR 1.313(c)(2).

Petitioner is advised that the issue fee paid on December 7, 2010 cannot be refunded. If, however, this application is again allowed, petitioner may request that it be applied towards the issue fee required by the new Notice of Allowance.[1]

Telephone inquiries should be directed to the undersigned at (571) 272-7253.

This application is being referred to Technology Center AU 1774 for processing of the request for continued examination under 37 CFR 1.114 and for consideration of the concurrently filed information disclosure statement.

/Monica A. Graves/
Petitions Examiner, Office of Petitions

---

[1] *The request to apply the issue fee to the new Notice may be satisfied by completing and returning the new Part B – Fee(s) Transmittal Form (along with any balance due at the time of submission). Petitioner is advised that the Issue Fee Transmittal Form must be completed and timely submitted to avoid abandonment of the application.*

UNITED STATES PATENT AND TRADEMARK OFFICE

Commissioner for Patents
United States Patent and Trademark Office
P.O. Box 1450
Alexandria, VA 22313-1450
www.uspto.gov

HOLTZ, HOLTZ, GOODMAN & CHICK PC
220 Fifth Avenue
16TH Floor
NEW YORK NY 10001-7708

MAIL

MAR 24 2011

DIRECTOR'S OFFICE
TECHNOLOGY CENTER 2600

In re Application of SUDO, TAKASHI Application No. 12/548,714 Filed: August 27, 2009 Attorney Docket No. **09543/LH**	: : : : : : :	DECISION ON REQUEST TO PARTICIPATE IN PATENT PROSECUTION HIGHWAY PROGRAM AND PETITION TO MAKE SPECIAL UNDER 37 CFR 1.102(a)

This is a decision on the request to participate in the Patent Prosecution Highway (PPH) program and the petition under 37 CFR 1.102(a), filed February 1, 2011 to make the above-identified application special.

The request and petition are **GRANTED**.

A grantable request to participate in the PPH program and petition to make special require:

(1) The U.S. application must validly claim priority under 35 U.S.C. 119(a) to one or more applications filed in the JPO;
(2) Applicant must submit a copy of the allowable/patentable claim(s) from the JPO application(s) along with an English translation thereof and a statement that the English translation is accurate;
(3) All the claims in the U.S. application must sufficiently correspond or be amended to sufficiently correspond to the allowable/patentable claim(s) in the JPO application(s);
(4) Examination of the U.S. application has not begun;
(5) Applicant must submit a copy of all the office actions from each of the JPO application(s) containing the allowable/patentable claim(s) along with an English translation thereof and a statement that the English translation is accurate; and
(6) Applicant must submit an IDS listing the documents cited by the JPO examiner in the JPO office action along with copies of documents except U.S. patents or U.S. patent application publications.

The request to participate in the PPH program and petition comply with the above requirements. Accordingly, the above-identified application has been accorded "special" status.

Telephone inquiries concerning this decision should be directed to Kenneth Wieder at 571-272-2986.

All other inquiries concerning the examination or status of the application should be directed to Patent Application Information Retrieval (PAIR) system.

The application is being forwarded to the examiner for action on the merits commensurate with this decision.

/Kenneth A. Wieder/

Kenneth Wieder
Quality Assurance Specialist
Technology Center 2600
Communications

SPE RESPONSE FOR CERTIFICATE OF CORRECTION

DATE : 10/27/11

TO SPE OF : ART UNIT 2832

SUBJECT : Request for Certificate of Correction for Appl. No.: 12548849 Patent No.: 8022288

CofC mailroom date: 10/17/11

Please respond to this request for a certificate of correction within 7 days.

FOR IFW FILES:

Please review the requested changes/corrections as shown in the **COCIN** document(s) in the IFW application image. No new matter should be introduced, nor should the scope or meaning of the claims be changed.

Please complete the response (see below) and forward the completed response to scanning using document code **COCX**.

FOR PAPER FILES:

Please review the requested changes/corrections as shown in the attached certificate of correction. Please complete this form (see below) and forward it with the file to:

Certificates of Correction Branch (CofC)
Randolph Square – 9D10-A
Palm Location 7580
[redacted]

Note: **Should the changes to claim 5 be approved?**

Lamonte Newsome

Certificates of Correction Branch

571-272-3421

Thank You For Your Assistance

The request for issuing the above-identified correction(s) is hereby:
Note your decision on the appropriate box.

SPE RESPONSE FOR CERTIFICATE OF CORRECTION

X Approved — **All** changes apply.

☐ **Approved in Part** — Specify below which changes **do not** apply.

☐ **Denied** — State the reasons for denial below.

Comments: Changes are corrections to typos in the patent.

/Elvin Enad/

SPE AU2832

UNITED STATES PATENT AND TRADEMARK OFFICE

UNITED STATES DEPARTMENT OF COMMERCE
United States Patent and Trademark Office
Address: COMMISSIONER FOR PATENTS
P.O. Box 1450
Alexandria, Virginia 22313-1450
www.uspto.gov

APPLICATION NO.	FILING DATE	FIRST NAMED INVENTOR	ATTORNEY DOCKET NO.	CONFIRMATION NO.
12/548,855	08/27/2009	Yosuke KADOYA	10202.214	7866

7590 02/24/2012

NIDEC CORPORATION
c/o KEATING & BENNETT, LLP
1800 Alexander Bell Drive
SUITE 200
Reston, VA 20191

EXAMINER
SCHEUERMANN, DAVID W

ART UNIT	PAPER NUMBER
2834	

NOTIFICATION DATE	DELIVERY MODE
02/24/2012	ELECTRONIC

DECISION GRANTING PETITION UNDER 37 CFR 1.138(d)

The declaration of express abandonment is recognized

This is in response to the petition under 37 CFR 1.138(d), requesting for a refund of any previously paid search fee and excess claims fee in the above-identified application.

The petition is granted.

The express abandonment is recognized. Any previously paid search fee and excess claims fee are hereby refunded.

Telephone inquiries should be directed to the Office of Data Management at (571) 272-4200.

Mimi Jarmel

Patent Publication Branch
Office of Data Management

FORM PET651G (Rev. 08/07)

PTO/SB/20PCT-EP (05-10)
Approved for use through 01/31/2012. OMB 0651-0058
U.S. Patent and Trademark Office; U. S. DEPARTMENT OF COMMERCE
Under the Paperwork Reduction Act of 1995, no persons are required to respond to a collection of information unless it displays a valid OMB control number.

REQUEST FOR PARTICIPATION IN THE PATENT COOPERATION TREATY - PATENT PROSECUTION HIGHWAY (PCT-PPH) PILOT PROGRAM BETWEEN THE EUROPEAN PATENT OFFICE (EPO) AND THE USPTO

Application No:	12/548,868	Filing date:	August 27, 2009
First Named Inventor:	John A. Karpiel		
Title of the Invention:	Stapling Device For Closing Perforations		

THIS REQUEST FOR PARTICIPATION IN THE PCT-PPH PILOT PROGRAM ALONG WITH THE REQUIRED DOCUMENTS MUST BE SUBMITTED VIA EFS-WEB. INFORMATION REGARDING EFS-WEB IS AVAILABLE AT HTTP://WWW.USPTO.GOV/EBC/EFS_HELP.HTML

APPLICANT HEREBY REQUESTS PARTICIPATION IN THE PCT-PPH PROGRAM AND PETITIONS TO MAKE THE ABOVE-IDENTIFIED APPLICATION SPECIAL UNDER THE PCT-PPH PROGRAM.

The above-identified application is (1) a national stage entry of the corresponding PCT application, or (2) a national stage entry of another PCT application which claims priority to the corresponding PCT application, or (3) a national application that claims domestic/ foreign priority to the corresponding PCT application, or (4) a national application which forms the basis for the priority claim in the corresponding PCT application, or (5) a continuing application of a U.S. application that satisfies one of (1) to (4) above, or (6) a U.S. application that claims domestic benefit to a U.S. provisional application which forms the basis for the priority claim in the corresponding PCT application.

The corresponding PCT application number(s) is/are: PCT/US2009/0055167

The international filing date of the corresponding PCT application(s) is/are: August 27, 2009

I. List of Required Documents:

a. **A copy of the latest international work product (WO/ISA, WO/IPEA, or IPER) in the above–identified corresponding PCT application(s)**

- [x] Is attached
- [ ] Is not attached because the document is already in the U.S. application.

b. **A copy of all claims which were indicated as having novelty, inventive step and industrial applicability in the above-identified corresponding PCT application(s).**

- [x] Is attached.
- [ ] Is not attached because the document is already in the U.S. application.

c. **English translations of the documents in a. and b. above are attached (if the documents are not in the English language). A statement that the English translation is accurate is attached for the document in b. above.**

This collection of information is required by 35 U.S.C. 119, 37 CFR 1.55, and 37 CFR 1.102(d). The information is required to obtain or retain a benefit by the public, which is to file (and by the USPTO to process) an application. Confidentiality is governed by 35 U.S.C. 122 and 37 CFR 1.11 and 1.14. This collection is estimated to take 2 hours to complete, including gathering, preparing, and submitting the completed application form to the USPTO. Time will vary depending upon the individual case. Any comments on the amount of time you require to complete this form and/or suggestions for reducing this burden should be sent to the Chief Information Officer, U.S. Patent and Trademark Office, U.S. Department of Commerce, P.O. Box 1450, Alexandria, VA 22313-1450. DO NOT SEND FEES OR COMPLETED FORMS TO THIS ADDRESS.

Approved for use through 01/31/2012. OMB 0651-0058
U.S.Patent and Trademark Office; U.S. DEPARTMENT OF COMMERCE
Under the Paperwork Reduction Act of 1995, no persons are required to respond to a collection of information unless it displays a valid OMB control number.

REQUEST FOR PARTICIPATION IN THE PCT-PPH PILOT PROGRAM BETWEEN THE EPO AND THE USPTO

(continued)

Application No.:	12/548,868
First Named Inventor:	John A. Karpiel

d. **(1) An information disclosure statement listing the documents cited in the international work products (ISR, WO/ISA, WO/IPEA, IPER) of the corresponding PCT application.**

☐ Is attached

☒ Has already been filed in the above-identified U.S. application on August 9, 2010

(2) Copies of all documents (except) for U.S. patents or U.S. patent application publications)

☐ Are attached.

☒ Have already been filed in the above-identified U.S. application on August 9, 2010

II. Claims Correspondence Table:

Claims in US Application	Patentable Claims in the corresponding PCT Application	Explanation regarding the correspondence
1, 3-8, 10-15	2-4, 6, 8	Original Claim 2 directly corresponds to Claim 2 in the PCT application.
		Claim 2 has now been incorporated into amended Claim 1.
		All remaining claims depend from amended Claim 1.

III. All the claims in the US application sufficiently correspond to the patentable claims in the corresponding PCT application.

Signature /Michael N. Spink/	Date June 23, 2011
Name (Print/Typed) Michael N. Spink	Registration Number 47,107

UNITED STATES PATENT AND TRADEMARK OFFICE

UNITED STATES DEPARTMENT OF COMMERCE
United States Patent and Trademark Office
Address: COMMISSIONER FOR PATENTS
P.O. Box 1450
Alexandria, Virginia 22313-1450
www.uspto.gov

APPLICATION NO.	FILING DATE	FIRST NAMED INVENTOR	ATTORNEY DOCKET NO.	CONFIRMATION NO.
12/548,868	08/27/2009	JOHN A. KARPIEL	10000-1677	7892

48003 7590 07/08/2011
BRINKS HOFER GILSON & LIONE/CHICAGO/COOK
PO BOX 10395
CHICAGO, IL 60610

EXAMINER
MCDERMOTT, CORRINE MARIE

ART UNIT	PAPER NUMBER
3773	

MAIL DATE	DELIVERY MODE
07/08/2011	PAPER

Please find below and/or attached an Office communication concerning this application or proceeding.

The time period for reply, if any, is set in the attached communication.

UNITED STATES PATENT AND TRADEMARK OFFICE

Commissioner for Patents
United States Patent and Trademark Office
P.O. Box 1450
Alexandria, VA 22313-1450
www.uspto.gov

BRINKS HOFER GILSON & LIONE/CHICAGO/COOK
PO BOX 10395
CHICAGO IL 60610

In re Application of: KARPIEL, JOHN A. Serial No.: 12/548868 Filed: August 27, 2009 Attorney Docket No. : 10000-1677 Title: STAPLING DEVICE FOR CLOSING PERFORATIONS	DECISION ON A REQUEST TO PARTICIPATE IN PATENT PCT/PROSECUTION HIGHWAY PROGRAM AND PETITION TO MAKE SPECIAL UNDER CFR 1.102(a)

This is a decision on the request to participate in the Patent Prosecution Highway (PPH) program and the petition under 37 CFR 1.102(a), filed June 23, 2011 to make the above-identified application special.

The request and petition are **granted**.

A grantable request to participate in the PPH pilot program and petition to make special require:

(1) The U.S. application must validly claim priority under 35 U.S.C. 119(a) to one or more PCT applications filed in the JPO, EPO, KIPO, or USPTO;
(2) Applicant must submit a copy of the allowable/patentable claim(s) from the PCT application(s) latest international work product (the written opinion or the IPER) along with an English translation thereof and a statement that the English translation is accurate;
(3) All the claims in the U.S. application must sufficiently correspond or be amended to sufficiently correspond to the allowable/patentable claim(s) in the PCT application(s);
(4) Examination of the U.S. application has not begun;
(5) Applicant must submit a copy of the latest international work product from the PCT application containing the allowable/patentable claim(s) along with an English translation thereof and a statement that the English translation is accurate; and
(6) Applicant must submit an IDS listing the documents cited by the PCT examiner in the international work product along with copies of documents except U.S. patents or U.S. patent application publications.

In light of the petition being properly submitted, the request to participate in the PPH program and the petition comply with the above requirements. Accordingly, the above-identified application has been accorded "special" status.

The applicant is encouraged to cite and submit all relevant prior art references, if any, to facilitate examination in this application.

Response must be filed via EFS-Web. Telephone inquiries concerning this decision should be directed to Henry C. Yuen, at 571-272-4856.

Petition is **granted**.

/Henry C. Yuen/

Henry C. Yuen
Special Programs Examiner
Technology Center 3700
Tel: 571-272-4856

UNITED STATES PATENT and TRADEMARK OFFICE

COMMISSIONER FOR PATENTS
UNITED STATES PATENT AND TRADEMARK OFFICE
P.O BOX 1450
ALEXANDRIA, VA 22313-1450
www.uspto.gov

KNOBBE MARTENS OLSON & BEAR LLP
2040 MAIN STREET
FOURTEENTH FLOOR
IRVINE CA 92614

MAILED
MAR 18 2011
PCT LEGAL ADMINISTRATION

In re Application of	:	DECISION ON
OKANO et al	:	
Application No.: 12/548,881	:	
Filing Date: 07 April 2004	:	PETITION UNDER
Attorney's Docket No.: IWAT1.001APC	:	
For: THERAPEUTIC AGENT... INJURIES	:	37 CFR 1.181

This Decision is in response to applicants' "PETITION FOR ACCEPTANCE OF DELAYED PRIORITY CLAIM" filed on 07 Janaury 2011, which is being treated as a petition under 37 CFR 1.181 to correct the priority claim.

BACKGROUND

On 27 August 2009, applicant filed a utility application at the USPTO. The specification states the relationship that this application is a continuation of and claims benefit of priority to PCT International Application number PCT/JP2008/053557, which claim the benefit of priority PCT of international application number PCT/JP2007/053804. The ADS filed on such date indicated on the Domestic Priority Information section that PCT/JP2008/053557 is a non provisional of PCT/JP2007/053804.

On 15 September 2009 filed, inter alia, a supplemental ADS on the Domestic Priority Information section that PCT/JP2008/053557 is a non provisional of PCT/JP2007/053804.

On 06 May 2010, applicants filed a request for corrected filing receipt to correct the priority as listed on the specification and ADS as filed.

On 13 May 2010, the USPTO mailed a "Response to Request For Corrected Filing Receipt" indicating that a continuity claimed under 35 USC 120 cannot be added without the applicant supplying the relationship in an ADS or amendment to the first page of the specification.

On 07 January 2011, applicants filed a "Petition for Acceptance of Delayed Priority Claim.

DISCUSSION

If applicants want to file a petition for acceptance of delayed domestic priority under 35 USC 120 because the benefit claim is added after the time period required by 37 CFR 1.78(a),

then applicants are required to file a petition under 37 CFR 1.78(a)(3) and a surcharge is required. In addition the proper reference to the relationship in the chain of application must be included either on an ADS or amendment to the first page of the specification. Note MPEP 201.11

A petition for acceptance of a claim for late priority under 37 CFR 1.78(a)(3) is only applicable to those applications filed on or after November 29, 2000. Further, the petition is appropriate only after the expiration of the period specified in 37 CFR 1.78(a)(2)(ii) and 1.78(a)(5)(ii). In addition, the petition under 37 CFR 1.78(a)(3) must be accompanied by:

(1) the reference required by 35 U.S.C. 120 and paragraph (a)(2) of this section to the prior filed application, unless previously submitted:

(2) the surcharge set forth in § 1.17(t); and

(3) a statement that the entire delay between the date the claim was due under 37 CFR 1.78(a)(2)(ii) of this section and and the date the claim was filed was unintentional. The Director may require additional information where there is a question whether the delay was unintentional.

CONCLUSION

For reasons above, the petition under 37 CFR 1.181 is **DISMISSED**, without prejudice.

If reconsideration of the merits of the petition under 37 CFR 1.181 is desired, or if applicants desire to correct the domestic priority claim, then applicant must either file a petition under 37 CFR 1.78(a)(3) or applicant must file a request for reconsideration within TWO (2) MONTHS from the mail date of this Decision.

Any further correspondence with respect to this matter may be filed electronically via EFS-Web selecting the document description "Petition for review and processing by the PCT Legal Office" or by mail addressed to Mail Stop PCT, Commissioner for Patents, Office of PCT Legal Administration, P.O. Box 1450, Alexandria, Virginia 22313-1450, with the contents of the letter marked to the attention of the Office of PCT Legal Administration.

Rafael Bacares
PCT Legal Examiner
PCT Legal Office
Telephone: (571) 272-3276
Facsimile: (571) 273-6459

UNITED STATES PATENT and TRADEMARK OFFICE

COMMISSIONER FOR PATENTS
UNITED STATES PATENT AND TRADEMARK OFFICE
P.O BOX 1450
ALEXANDRIA, VA 22313-1450
www.uspto.gov

MAILED
AUG 05 2011
PCT LEGAL ADMINISTRATION

KNOBBE MARTENS OLSON & BEAR LLP
2040 MAIN STREET
FOURTEENTH FLOOR
IRVINE CA 92614

In re Application of	:	DECISION ON
OKANO et al	:	
Application No.: 12/548,881	:	
Filing Date: 07 April 2004	:	PETITION UNDER
Attorney's Docket No.: IWATI.001APC	:	
For: THERAPEUTIC AGENT... INJUIRES	:	37 CFR 1.78(a)(3)

This is in response to applicants' "PETITION FOR ACCEPTANCE OF DELAYED PRIORITY CLAIM," filed 02 May 2011.

In a decision from this Office on 18 March 2011, the petition under 37 CFR §1.181 as applicants needed to file a petition under 37 CFR 1.78(a)(3).

On 02 May 2011, petitioner filed a petition under 37 CFR 1.78(3) to claim priority under 35 USC 120 from international application PCT/JP2008/053557 under 37 C.F.R. §1.178(a)(3).

The petition is **DISMISSED.**

A petition for acceptance of a claim for late priority under 37 CFR 1.78(a)(3) is only applicable to those applications filed on or after November 29, 2000. Further, the petition is appropriate only after the expiration of the period specified in 37 CFR 1.78(a)(2)(ii). In addition, the petition under 37 CFR 1.78(a)(3) must be accompanied by:

> (1) the reference required by 35 U.S.C. 120 and paragraph (a)(2) of this section to the prior filed application, unless previously submitted:
>
> (2) the surcharge set forth in § 1.17(t); and
>
> (3) a statement that the entire delay between the date the claim was due under 37 CFR 1.78(a)(2)(ii) of this section and the date the claim was filed was unintentional. The Director may require additional information where there is a question whether the delay was unintentional.

The petition satisfies items (2) and (3) but not item (1).

Regarding requirement (1), MPEP 201.11, Section C., (Benefit Claims to Multiple Prior Application), states in the relevant part, "The reference to the prior applications must identify all of the prior applications and indicate the relationship (i.e., continuation, divisional, or continuation-in-part) between each nonprovisional application in order to establish copendency throughout the entire chain of prior applications. Appropriate references must be made in each intermediate application in the chain of prior applications. If an applicant desires, for example, the following benefit claim:

"this application is a continuation of Application No. C, filed ---, which is a continuation of Application No. B, filed ---, which claims the benefit of provisional Application No. A, filed ---," then Application No. C must have a reference to Application No. B and provisional Application No. A, and Application No. B must have a reference to provisional Application No. A." **(Emphasis added)**

In the present case, intermediate applications PCT/JP2008/053557 does not contain a proper reference establishing the relationship to international application PCT/JP2007/053804, and will need to be provided. Note MPEP 201.11

Regarding requirement (2), the proper surcharge of $1,410.00 under 37 CFR 1.17(t) has been provided by credit card.

Regarding requirement (3), the proper statement has been provided.

Any inquiries concerning this decision may directed to Rafael Bacares at (571) 272-3276. All other inquiries concerning either the examination procedures or status of the application should be directed to the Technology Center Art Unit 1647.

Any further correspondence with respect to this matter may be filed electronically via EFS-Web selecting the document description "Petition for review and processing by the PCT Legal Office" or by mail addressed to Mail Stop PCT, Commissioner for Patents, Office of PCT Legal Administration, P.O. Box 1450, Alexandria, Virginia 22313-1450, with the contents of the letter marked to the attention of the Office of PCT Legal Administration.

Rafael Bacares
Legal Examiner
PCT Legal Administrative Office
Telephone: (571) 272-3276
Facsimile: (571) 273-0459

Bryan Lin
Legal Examiner
PCT Legal Administrative Office

UNITED STATES PATENT and TRADEMARK OFFICE

COMMISSIONER FOR PATENTS
UNITED STATES PATENT AND TRADEMARK OFFICE
P.O BOX 1450
ALEXANDRIA, VA 22313-1450
www.uspto.gov

KNOBBE MARTENS OLSON & BEAR LLP
2040 MAIN STREET
FOURTEENTH FLOOR
IRVINE CA 92614

MAILED
OCT 19 2011
PCT LEGAL ADMINISTRATION

In re Application of	:	DECISION ON
OKANO et al	:	
Application No.: PCT/JP2008/053557	:	
Filing Date: 28 February 2008	:	PETITION UNDER
Attorney's Docket No.: IWATI.001APC	:	
For: THERAPEUTIC AGENT... CORD INJURY	:	37 CFR 1.78(a)(3)

This is in response to applicants' "PETITION FOR ACCEPTANCE OF DELAYED PRIORITY CLAIM," filed 19 August 2011, which is being treated as a petition under 37 CFR §1.78(a)(3).

In a decision from this Office on 05 August 2011 for application 12/548,881, the petition under 37 CFR §1.78(a)(3) was dismissed as requirement (1) was not met. The decision stated that intermediate application, aforementioned PCT/JP2008/053557, did not contain a proper reference establishing the relationship to international application PCT/JP2007/053804.

On 19 August 2011, applicant filed a petition under 37 CFR 1.78(a)(3) to establish the proper relationship to application PCT/JP2007/053804.

The petition is **GRANTED**.

A petition for acceptance of a claim for late priority under 37 CFR 1.78(a)(3) is only applicable to those applications filed on or after November 29, 2000. Further, the petition is appropriate only after the expiration of the period specified in 37 CFR 1.78(a)(2)(ii). In addition, the petition under 37 CFR 1.78(a)(3) must be accompanied by:

(1) the reference required by 35 U.S.C. 120 and paragraph (a)(2) of this section to the prior filed application, unless previously submitted:

(2) the surcharge set forth in § 1.17(t); and

(3) a statement that the entire delay between the date the claim was due under 37 CFR 1.78(a)(2)(ii) of this section and the date the claim was filed was unintentional. The Director may require additional information where there is a question whether the delay was unintentional.

The petition satisfies requirements (1) – (3) under 37 CFR §1.78(a)(3).

Regarding requirement (1) a proper reference to the prior-filed international application PCT/JP2007/053804 has now been included in an amendment to the first sentence of the specification following the title, as required by 37 CFR 1.78(a)(2)(iii).

Regarding requirement (2), the surcharge has been provided.

Regarding requirement (3), the proper statement has been provided.

Accordingly, having found that the instant petition for acceptance of an unintentionally delayed claim for the benefit of priority under 35 U.S.C.§§120 and 365(c) to the prior-filed international application satisfies the conditions of 37 CFR 1.78(a)(3), the petition is granted.

CONCLUSION

For the reasons above, the petition under 37 CFR 1.78(a)(3) is **GRANTED**.

Any questions concerning this matter may be directed to Rafael Bacares at (571) 272-3276.

Rafael Bacares
Legal Examiner
PCT Legal Administrative Office
Telephone: (571) 272-3276
Facsimile: (571) 273-0459

Bryan Lin
Legal Examiner
PCT Legal Administrative Office

UNITED STATES PATENT and TRADEMARK OFFICE

COMMISSIONER FOR PATENTS
UNITED STATES PATENT AND TRADEMARK OFFICE
P.O BOX 1450
ALEXANDRIA, VA 22313-1450
www.uspto.gov

KNOBBE MARTENS OLSON & BEAR LLP
2040 MAIN STREET
FOURTEENTH FLOOR
IRVINE CA 92614

MAILED
OCT 19 2011
PCT LEGAL ADMINISTRATION

In re Application of	:	DECISION ON
OKANO et al	:	
Application No.: 12/548,881	:	RENEWED
Filing Date: 27 August 2009	:	PETITION UNDER
Attorney's Docket No.: IWATI.001APC	:	
For: THERAPEUTIC AGENT... INJUIRES	:	37 CFR 1.78(a)(3)

This is in response to applicants' "RESUBMISSION OF PETITION FOR ACCEPTANCE OF DELAYED PRIORITY CLAIM," filed 19 August 2011, which is being treated as a renewed petition under 37 CFR § 1.78(a)(3).

In a decision from this Office on 05 August 2011, the petition under 37 CFR §1.78(a)(3) was dismissed as requirement (1) was not met. The decision stated that intermediate application PCT/JP2008/053557 did not contain a proper reference establishing the relationship to international application PCT/JP2007/053804.

On 19 August 2011, petitioner filed a renewed petition under 37 CFR §1.78(a)(3) to claim priority under 35 USC 120 and making the appropriate reference in the intermediate application PCT/JP2008/053557 in the chain of prior applications.

The petition is **GRANTED**.

A petition for acceptance of a claim for late priority under 37 CFR 1.78(a)(3) is only applicable to those applications filed on or after November 29, 2000. Further, the petition is appropriate only after the expiration of the period specified in 37 CFR 1.78(a)(2)(ii). In addition, the petition under 37 CFR 1.78(a)(3) must be accompanied by:

(1) the reference required by 35 U.S.C. 120 and paragraph (a)(2) of this section to the prior filed application, unless previously submitted:

(2) the surcharge set forth in § 1.17(t); and

(3) a statement that the entire delay between the date the claim was due under 37 CFR 1.78(a)(2)(ii) of this section and the date the claim was filed was unintentional. The Director may require additional information where there is a question whether the delay was unintentional.

The petition now satisfies requirements (1) – (3) under 37 CFR 1.78(a)(3).

Regarding requirement (1) a proper reference to the prior-filed applications has been included in an amendment to the first sentence of the specification following the title and now the intermediate application PCT/JP2008/053557 contains a proper reference establishing the relationship to international application PCT/JP2007/053804, as required by 37 CFR 1.78(a)(2)(iii).

Regarding requirement (2), the proper surcharge of $1,410.00 under 37 CFR 1.17(t) has been provided by credit card.

Regarding requirement (3), the proper statement has been provided.

Accordingly, having found that the instant petition for acceptance of an unintentionally delayed claim for the benefit of priority under 35 U.S.C.§§120 and 365(c) to the prior-filed international application satisfies the conditions of 37 CFR 1.78(a)(3), the petition is granted.

The granting of the petition to accept the delayed benefit claim to the prior-filed applications under 37 CFR 1.78(a)(3) should not be construed as meaning that this application is entitled to the benefit of the prior-filed applications. In order for this application to be entitled to the benefit of the prior-filed applications, all other requirements under 35 U.S.C. § 120 and 37 CFR 1.78(a)(1) and (a)(2) must be met. Similarly, the fact that the corrected Filing Receipt accompanying this decision on petition include the prior-filed applications should not be construed as meaning that applicant is entitled to the claim for benefit of priority to the prior-filed applications noted thereon. Accordingly, the examiner will, in due course, consider this benefit claim and determine whether this application is entitled to the benefit of the earlier filing date.

CONCLUSION

For the reasons above, the petition under 37 CFR 1.78(a)(3) is **GRANTED**.

Any questions concerning this matter may be directed to Rafael Bacares at (571) 272-3276. All other inquires concerning either the examination procedures or status of the application should be directed to the Technology Center.

This application will be forwarded to Technology Center Art Unit 1647 for examination.

Rafael Bacares
Legal Examiner
PCT Legal Administrative Office
Telephone: (571) 272-3276
Facsimile: (571) 273-0459

Bryan Lin
Legal Examiner
PCT Legal Administrative Office

Doc Code: PET.GREEN
Document Description: Petition for Green Tech Pilot

PTO/SB/420 (11-10)
Approved for use through 01/31/2011. OMB 0651-0062
U.S. Patent and Trademark Office; U.S. DEPARTMENT OF COMMERCE
Under the Paperwork Reduction Act of 1995, no persons are required to respond to a collection of information unless it displays a valid OMB control number.

PETITION TO MAKE SPECIAL UNDER THE GREEN TECHNOLOGY PILOT PROGRAM

Attorney Docket Number:	TMCF-10702/08	Application Number (if known): 12/548,882- Conf. #7926	Filing date: August 27, 2009
First Named Inventor:	Shinji Ichikawa		
Title:	NONCONTACT ELECTRIC POWER RECEIVING DEVICE, NONCONTACT ELECTRIC POWER TRANSMITTING DEVICE, NONCONTACT ELECTRIC POWER FEEDING SYSTEM, AND ELECTRICALLY POWERED VEHICLE		

APPLICANT HEREBY REQUESTS TO PARTICIPATE IN THE GREEN TECHNOLOGY PILOT PROGRAM FOR THE ABOVE-IDENTIFIED APPLICATION. See Instruction Sheet on page 2.

This petition must be timely filed electronically using the USPTO electronic filing system, EFS-Web.

1. By filing this petition:

   Applicant is requesting early publication: Applicant hereby requests early publication under 37 CFR 1.219 and the publication fee set forth in 37 CFR 1.18(d) accompanies this request.

2. By filing this petition: applicant is agreeing to make an election without traverse in a telephonic interview and elect an invention that meets the eligibility requirements for the Green Technology Pilot Program, if the Office determines that the claims are not obviously directed to a single invention. See Instruction Sheet.

3. This request is accompanied by statements of special status for the eligibility requirement.

4. The application contains no more than three (3) independent claims and twenty (20) total claims.

5. The application does not contain any multiple dependent claims.

6. Other attachments: Preliminary Amendment

Signature	/Thomas E. Anderson/	Date	February 18, 2011
Name (Print/Typed)	Thomas E. Anderson	Registration Number	31,318

Note: Signatures of all the inventors or assignees of record of the entire interest or their representative(s) are required in accordance with 37 CFR 1.33 and 11.18. Please see 37 CFR 1.4(d) for the form of the signature. If necessary, submit multiple forms if more than one signature, see below.*

☐ *Total of 1 forms are submitted.

Docket No.: TMCF-10702/08
(PATENT)

IN THE UNITED STATES PATENT AND TRADEMARK OFFICE

In re Patent Application of:
Shinji Ichikawa

Application No.: 12/548,882 Confirmation No.: 7926

Filed: August 27, 2009

For: NONCONTACT ELECTRIC POWER RECEIVING DEVICE, NONCONTACT ELECTRIC POWER TRANSMITTING DEVICE, NONCONTACT ELECTRIC POWER FEEDING SYSTEM, AND ELECTRICALLY POWERED VEHCILE

STATEMENT OF SPECIAL STATUS FOR ELIGIBILITY UNDER THE GREEN TECHNOLOGY PILOT PROGRAM

MS Amendment
Commissioner for Patents
P.O. Box 1450
Alexandria, VA 22313-1450

Dear Sir or Madam:

Applicant requests that this invention be qualified for the Green Technology Pilot Program effective December 8, 2009. Applicant is requesting early publication under 27 CFR 1.219 and the publication fee set forth in 37 CFR 1.8(d) accompanies this request. Furthermore, by filing this application, Applicant is agreeing to make an election without traverse in a telephonic interview and elect an invention that meets the eligibility requirement and classification requirement set forth in the notice. The application does not contain more than three (3) independent claims and twenty (20) total claims. This application does not contain any multiple dependent claims. Special status is sought

because this invention materially enhances the quality of the environment by contributing to the more efficient utilization and conservation of energy as required.

The present invention provides a shielding method in a noncontact electric power receiving device for an electrically powered vehicle including a noncontact electric power transmitting device, a noncontact electric power feeding system each of which employs the resonance method. A noncontact electric power receiving device includes an electric power receiving resonator and an electromagnetism shielding material. The electric power receiving resonator receives electric power from an electric power transmitting resonator, which receives electric power from a power source to generate an electromagnetic field, by resonating with the electric power transmitting resonator through the electromagnetic field. The electromagnetism shielding material is provided to surround the electric power receiving resonator and has an opening at one side thereof to allow the electric power receiving resonator to receive the electric power from the electric power transmitting resonator. The method allows transmission of a large electric power of several kW to a location in a relatively long distance (for example, several meters) away plus the use of shielding discussed above thereby greatly increasing the efficiency of electric vehicles.

The present invention clearly qualifies for special status under the Green Technology Pilot Program. Electric vehicles, and improvements to electric vehicles, contribute to the more efficient utilization and conservation of energy resources. Specifically, this invention provides for reduced requirements of an electric vehicle system directly resulting in reduced energy consumption. Accordingly, Applicant

respectfully requests this application qualify for special status under the Green Technology Pilot Program.

Dated:

Respectfully submitted,

By: /Thomas E. Anderson/
Thomas E. Anderson
Electronic Signature
Registration No.: 31,318
GIFFORD, KRASS, SPRINKLE, ANDERSON & CITKOWSKI, P.C.
2701 Troy Center Drive, Suite 330
Post Office Box 7021
Troy, Michigan 48007-7021
(248) 647-6000
(248) 647-5210 (Fax)
Attorney for Applicant

UNITED STATES PATENT AND TRADEMARK OFFICE

UNITED STATES DEPARTMENT OF COMMERCE
United States Patent and Trademark Office
Address: COMMISSIONER FOR PATENTS
P.O. Box 1450
Alexandria, Virginia 22313-1450
www.uspto.gov

APPLICATION NO.	FILING DATE	FIRST NAMED INVENTOR	ATTORNEY DOCKET NO.	CONFIRMATION NO.
12/548,882	08/27/2009	Shinji Ichikawa	TMCF-10702/08	7926

25006 7590 03/01/2011
GIFFORD, KRASS, SPRINKLE,ANDERSON & CITKOWSKI, P.C
PO BOX 7021
TROY, MI 48007-7021

EXAMINER
CAVALLARI, DANIEL J

ART UNIT	PAPER NUMBER
2836	

MAIL DATE	DELIVERY MODE
03/01/2011	PAPER

Please find below and/or attached an Office communication concerning this application or proceeding.

The time period for reply, if any, is set in the attached communication.

UNITED STATES PATENT AND TRADEMARK OFFICE

Commissioner for Patents
United States Patent and Trademark Office
P.O. Box 1450
Alexandria, VA 22313-1450
www.uspto.gov

GIFFORD, KRASS, SPRINKLE,ANDERSON & CITKOWSKI, P.C
PO BOX 7021
TROY MI 48007-7021

In re Application of	:	
Shinji ICHIKAWA	:	DECISION ON PETITION
Application No. 12/548,882	:	TO MAKE SPECIAL UNDER
Filed: August 27, 2009	:	THE GREEN TECHNOLOGY
Attorney Docket No. TMCF-10702/08	:	PILOT PROGRAM

This is a decision on the petition under 37 CFR 1.102, filed on February 23, 2011, to make the above-identified application special under the pilot program for applications pertaining to Green Technologies as set forth 74 Federal Register Notice 64666 (December 8, 2009) and amended by 75 Federal Register Notice 28554 (May 21, 2010) and 75 Federal Register Notice 69049 (November 10, 2010).

The petition is **DISMISSED**.

If reconsideration of this decision is desired, a petition for reconsideration must be filed within ONE (1) MONTH OR THIRTY (30) DAYS from the mail date of this decision, whichever is longer. No extension of this time limit can be granted under 37 CFR 1.136(a) or (b). The petition for reconsideration should include an exhaustive attempt to provide the lacking item(s) noted below, since, after a decision on the petition for reconsideration, no further reconsideration or review of the matter will be undertaken by the Director.

A grantable petition to make an application special under 37 CFR 1.102 and the pilot program as set forth in 74 FR 64666 must be directed to a nonprovisional application filed under 35 USC 111(a) or be a national stage entry under 35 USC 371, exclusive of any reissue applications and be filed prior to the date of the notice, December 8, 2009.

In order to qualify for special status, the following requirements must be met. 1) The application must have no more than 3 independent claims and no more than 20 total claims. 2) The application must not contain any multiple dependent claims. 3) The petition must state the basis for seeking special status, i.e., the claimed invention either: A) materially enhances the quality of the environment or B) materially contributes to: i) the discovery or development of renewable energy resources, ii) the more efficient utilization and conservation of energy resources, or iii) greenhouse gas emission reduction. 4) If the disclosure is not clear on its face that the claimed invention materially contributes under category (A) or (B), the petition must be accompanied by a statement by the applicant, assignee, or an attorney/agent registered to practice before the Office explaining how the materiality standard is met. 5) A statement that applicant will agree to

make an election without traverse in a telephonic interview if a restriction requirement is made by the examiner. 6) The petition to make special must be filed electronically. 7) The petition must be filed at least one day prior to the date that a first Office Action appears in the Patent Application Information Retrieval (PAIR) system. 8) The petition must be accompanied by a request for early publication in compliance with 37 CFR 1.219 and include the publication fee as set forth in 37 CFR 1.18(d).

The requirement for a fee for consideration of the petition to make special for applications pertaining to Green Technologies has been waived.

The petition lacks item 4.

In regard to item 4, applicant's statement pertaining to how the materiality standard is met does not satisfy the requirements for this pilot. The instant petition includes a statement identifying the basis for the special status as contributing to more efficient utilization and conservation of energy. However, it is not readily apparent how the use of shielding can greatly increase the efficiency of electric vehicles as alleged in the petition. The recitation of the electrically powered vehicle in the claims is considered intended use. The materiality standard does not permit an applicant to speculate as to how a hypothetical end-user might specially apply the invention in a manner that could contribute to more efficient utilization and conservation of energy. Any argument that the claimed invention can be used with an electrically powered vehicle is considered speculate as to how a hypothetical end-user might specially apply the claimed invention.

Any reconsideration of this decision should be submitted through the USPTO electronic filing system, EFS-Web, and selecting the document description of "Petition for Green Tech Pilot" on the EFS-Web screen.

Telephone inquiries concerning this decision should be directed to Lee W. Young at 571-272-4549.

The application is being forwarded to the Technology Center Art Unit 2836 for action in its regular turn.

Lee W. Young
Quality Assurance Specialist
Technology Center 2800

Docket No.: TMCF-10702/08
(PATENT)

IN THE UNITED STATES PATENT AND TRADEMARK OFFICE

In re Patent Application of:
Shinji Ichikawa

Application No.: 12/548,882

Confirmation No.: 7926

Filed: August 27, 2009

For: NONCONTACT ELECTRIC POWER RECEIVING DEVICE, NONCONTACT ELECTRIC POWER TRANSMITTING DEVICE, NONCONTACT ELECTRIC POWER FEEDING SYSTEM, AND ELECTRICALLY POWERED VEHCILE

REQUEST FOR RECONSIDERATION FOR ELIGIBILITY UNDER THE GREEN TECHNOLOGY PILOT PROGRAM

MS Amendment
Commissioner for Patents
P.O. Box 1450
Alexandria, VA 22313-1450

Dear Sir:

Applicant filed the Petition to Make Special Under the Green Technology Pilot Program. A Petition to Make Special Under the Green Technology Pilot Program requires a statement of special status explaining how the materiality standard is met (item 4). All of the other 7 requirements were satisfied by the Application. Although Applicant submitted a statement of special status, the Examiner was not persuaded that the instant invention does in fact quality for Special Status under the Green Technology Pilot Program. The following outlines how the present invention clearly should qualify for Special Status under the Green Technology Pilot Program:

The present invention provides a shielding method in a noncontact electric power receiving device for an electrically powered vehicle including a noncontact electric power transmitting device, a noncontact electric power feeding system each of which employs the resonance method. A noncontact electric power receiving device includes an electric power receiving resonator and an electromagnetism shielding material. The electric power receiving resonator receives electric power from an electric power transmitting resonator, which receives electric power from a power source to generate an electromagnetic field, by resonating with the electric power transmitting resonator through the electromagnetic field. The electromagnetism shielding material is provided to surround the electric power receiving resonator and has an opening at one side thereof to allow the electric power receiving resonator to receive the electric power from the electric power transmitting resonator. The method allows transmission of a large electric power of several kW to a location in a relatively long distance (for example, several meters) away plus the use of shielding discussed above thereby greatly increasing the efficiency of electric vehicles.

Shielding Directly Improves Electric Vehicle Efficiency

Here, an electromagnetism shielding material having an opening at one side thereof to allow the electric power receiving resonator to receive the electric power from the electric power transmitting resonator is provided to surround the electric power receiving resonator, Page 5 lines 15-19. Accordingly, a leakage electromagnetic field generated in the surroundings of the electric power receiving resonator is shielded by the electromagnetism shielding material without preventing the electric power receiving resonator from receiving the electric power from the electric power transmitting

resonator, Page 5 lines 18-20 Thus, the present invention allows for appropriate restraint of the leakage electromagnetic field generated when electric power is transmitted in a noncontact manner using the resonance method from the electric power transmitting resonator to the electric power receiving resonator, Page 5 lines 23-27. The main purpose of this invention and the increased shielding is to directly improve efficiency of an electrically powered vehicle thereby providing for clear green technology.

Structure, Size and Angle of Shielding Box
Directly Improves Electric Vehicle Efficiency

Shielding box 250 is disposed so that its maximal area surface 420 can be opposite to the electric power receiving unit. Surface 420 has the opening and its remaining five surfaces reflect the resonant electromagnetic field (near field) generated in the surroundings of the electric power feeding unit when transmitting electric power to the electric power receiving unit. The electric power feeding unit constituted by primary self-resonant coil 240 and primary coil 230 is provided in shielding box 250 to transmit electric power to the electric power receiving unit via the opening (surface 420) of shielding box 250. the "surface 420 having the maximal area is disposed so that it can be opposite to the electric power receiving unit is to secure efficiency of transmission from the electric power feeding unit to the electric power receiving unit as much as possible." Page 13, lines 12-14.

The sizes of shielding boxes 190, 250, in particular, the size of shielding box 190, which is mounted on the vehicle, is determined in consideration of a mounting space and the electric power transmission efficiency. Namely, a smaller shielding box 190 is better in view of the mounting space in the vehicle while a larger shielding box 190 is

more preferable in view of the electric power transmission efficiency. Fig. 5 shows a relation between reflected electric power and a shielding distance. As shown in Fig. 5, as the shielding distance is shorter, the reflected electric power is greater. In other words, as the shielding distance is longer, the reflected electric power is smaller. Hence, from the viewpoint of the efficiency, a larger shielding box 190 is preferable directly improving the efficiency of an electric powered vehicle. Page 13, lines 15-26

Applicant again requests that this invention be qualified for the Green Technology Pilot Program effective December 8, 2009. Again, Applicant is requesting early publication under 27 CFR 1.219 and the publication fee set forth in 37 CFR 1.8(d) accompanies this request. Furthermore, by filing this application, Applicant is agreeing to make an election without traverse in a telephonic interview and elect an invention that meets the eligibility requirement and classification requirement set forth in the notice. The application does not contain more than three (3) independent claims and twenty (20) total claims. This application does not contain any multiple dependent claims. Special status is sought because this invention materially enhances the quality of the environment by contributing to the more efficient utilization and conservation of energy as required.

The present invention clearly qualifies for special status under the Green Technology Pilot Program. Electric vehicles, and improvements to electric vehicles, contribute to the more efficient utilization and conservation of energy resources. Specifically, this invention provides for reduced energy consumption of an electric vehicle. Accordingly, Applicant respectfully requests this application does now qualify

for special status under the Green Technology Pilot Program. Thank you very much for your reconsideration.

. The Director is hereby authorized to charge any deficiency in the fees filed, asserted to be filed or which should have been filed herewith (or with any paper hereafter filed in this application by this firm) to our Deposit Account No. 07-1180, under Order No. TMCF-10702/08.

Respectfully submitted,

By: /Thomas E. Anderson/
Thomas E. Anderson
Electronic Signature
Registration No.: 31,318
GIFFORD, KRASS, SPRINKLE, ANDERSON
& CITKOWSKI, P.C.
2701 Troy Center Drive, Suite 330
Post Office Box 7021
Troy, Michigan 48007-7021
(248) 647-6000
(248) 647-5210 (Fax)
Attorney for Applicant

UNITED STATES PATENT AND TRADEMARK OFFICE

UNITED STATES DEPARTMENT OF COMMERCE
United States Patent and Trademark Office
Address: COMMISSIONER FOR PATENTS
P.O. Box 1450
Alexandria, Virginia 22313-1450
www.uspto.gov

APPLICATION NO.	FILING DATE	FIRST NAMED INVENTOR	ATTORNEY DOCKET NO.	CONFIRMATION NO.
12/548,882	08/27/2009	Shinji Ichikawa	TMCF-10702/08	7926

25006 7590 04/05/2011
GIFFORD, KRASS, SPRINKLE,ANDERSON & CITKOWSKI, P.C
PO BOX 7021
TROY, MI 48007-7021

EXAMINER
CAVALLARI, DANIEL J

ART UNIT	PAPER NUMBER
2836	

MAIL DATE	DELIVERY MODE
04/05/2011	PAPER

Please find below and/or attached an Office communication concerning this application or proceeding.

The time period for reply, if any, is set in the attached communication.

UNITED STATES PATENT AND TRADEMARK OFFICE

Commissioner for Patents
United States Patent and Trademark Office
P.O. Box 1450
Alexandria, VA 22313-1450
www.uspto.gov

GIFFORD, KRASS, SPRINKLE, ANDERSON & CITKOWSKI, P.C
PO BOX 7021
TROY MI 48007-7021

In re Application of	:	
Shinji ICHIKAWA	:	DECISION ON PETITION
Application No. 12/548,882	:	TO MAKE SPECIAL UNDER
Filed: August 27, 2009	:	THE GREEN TECHNOLOGY
Attorney Docket No. TMCF-10702/08	:	PILOT PROGRAM

This is a decision on the petition under 37 CFR 1.102, filed on February 23, 2011 and renewed on March 30, 2011, to make the above-identified application special under the pilot program for applications pertaining to Green Technologies as set forth 74 Federal Register Notice 64666 (December 8, 2009) and amended by 75 Federal Register Notice 28554 (May 21, 2010) and 75 Federal Register Notice 69049 (November 10, 2010).

The petition is **GRANTED**.

A grantable petition to make an application special under 37 CFR 1.102 and the pilot program as set forth in 74 FR 64666 must be directed to a nonprovisional application filed under 35 USC 111(a) or be a national stage entry under 35 USC 371, exclusive of any reissue applications.

In order to qualify for special status, the following requirements must be met. 1) The application must have no more than 3 independent claims and no more than 20 total claims. 2) The application must not contain any multiple dependent claims. 3) The petition must state the basis for seeking special status, i.e., the claimed invention either: A) materially enhances the quality of the environment or B) materially contributes to: i) the discovery or development of renewable energy resources, ii) the more efficient utilization and conservation of energy resources, or iii) greenhouse gas emission reduction. 4) If the disclosure is not clear on its face that the claimed invention materially contributes under category (A) or (B), the petition must be accompanied by a statement by the applicant, assignee, or an attorney/agent registered to practice before the Office explaining how the materiality standard is met. 5) A statement that applicant will agree to make an election without traverse in a telephonic interview if a restriction requirement is made by the examiner. 6) The petition to make special must be filed electronically. 7) The petition must be filed at least one day prior to the date that a first Office Action appears in the Patent Application Information Retrieval (PAIR) system. 8) The petition must be accompanied by a request for early publication in compliance with 37 CFR 1.219 and include the publication fee as set forth in 37 CFR 1.18(d).

The requirement for a fee for consideration of the petition to make special for applications pertaining to Green Technologies has been waived.

The instant petition complies with items 1 – 8 above. Accordingly, the above-identified application has been accorded "special" status.

Telephone inquires concerning this decision should be directed to Lee W. Young at 571-272-4549.

The application is being forwarded to the Technology Center Art Unit 2875 for action in its regular turn.

Lee W. Young
Quality Assurance Specialist
Technology Center 2800

UNITED STATES PATENT AND TRADEMARK OFFICE

UNITED STATES DEPARTMENT OF COMMERCE
United States Patent and Trademark Office
Address: COMMISSIONER FOR PATENTS
P.O. Box 1450
Alexandria, Virginia 22313-1450
www.uspto.gov

APPLICATION NO.	FILING DATE	FIRST NAMED INVENTOR	ATTORNEY DOCKET NO.	CONFIRMATION NO.
12/548,966	08/27/2009	Naoko SATOH	347473US2TTC	8073

7590 07/18/2011
OBLON, SPIVAK, MCCLELLAND MAIER & NEUSTADT, L.L.P.
1940 DUKE STREET
ALEXANDRIA, VA 22314

EXAMINER
TRAN, THAI Q

ART UNIT	PAPER NUMBER
2484	

NOTIFICATION DATE	DELIVERY MODE
07/18/2011	ELECTRONIC

DECISION GRANTING PETITION UNDER 37 CFR 1.138(d)

The declaration of express abandonment is recognized

This is in response to the petition under 37 CFR 1.138(d), requesting for a refund of any previously paid search fee and excess claims fee in the above-identified application.

The petition is granted.

The express abandonment is recognized. Any previously paid search fee and excess claims fee are hereby refunded.

Telephone inquiries should be directed to the Office of Data Management at (571) 272-4200.

Betty Powell

Patent Publication Branch
Office of Data Management

FORM PET651G (Rev. 08/07)

UNITED STATES PATENT AND TRADEMARK OFFICE

Commissioner for Patents
United States Patent and Trademark Office
P.O. Box 1450
Alexandria, VA 22313-1450
www.uspto.gov

CLARK & ELBING LLP
101 FEDERAL STREET
BOSTON, MA 02110

MAILED

FEB 03 2011

OFFICE OF PETITIONS

Applicant: Adelfinskaya, et al.
Appl. No.: 12/549,117
Filing Date: August 27, 2009
Title: PHOSPHATE MODIFIED NUCLEOSIDES USEFUL AS SUBSTRATES FOR POLYMERASES AND AS ANTIVIRAL AGENTS
Attorney Docket No.: 50304/234001
Pub. No.: US 2010/0093656 A1
Pub. Date: April 15, 2010

This is a decision on the request for a corrected patent application publication under 37 CFR 1.221(b) or (a), received on June 10, 2010, for the above-identified application.

The request is granted.

The corrected patent application publication will be published in due course, unless the patent issues before the application is republished.

Inquiries relating to this matter may be directed to Mark Polutta at (571) 272-7709.

Mark Polutta
Senior Legal Advisor
Office of Patent Legal Administration
Office of the Deputy Commissioner
for Patent Examination Policy

UNITED STATES PATENT AND TRADEMARK OFFICE

Commissioner for Patents
United States Patent and Trademark Office
P.O. Box 1450
Alexandria, VA 22313-1450
www.uspto.gov

GIFFORD, KRASS, SPRINKLE,ANDERSON & CITKOWSKI, P.C
PO BOX 7021
TROY MI 48007-7021

MAILED

APR 10 2012

OFFICE OF PETITIONS

In re Application of	:	
Myles Kobren et al.	:	
Application No. 12/549,133	:	DECISION ON PETITION
Filed: August 27, 2009	:	TO WITHDRAW
Attorney Docket No. MYK-10202/29	:	FROM RECORD
	:	

This is a decision on the Request to Withdraw as attorney or agent of record under 37 C.F.R. § 1.36(b), filed March 28, 2012.

The request is **APPROVED**.

A grantable request to withdraw as attorney/agent of record must be signed by every attorney/agent seeking to withdraw or contain a clear indication that one attorney is signing on behalf of another/others. A request to withdraw will not be approved unless at least 30 (thirty) days would remain between the date of approval and the later of the expiration date of a time to file a response or the expiration date of the maximum time period which can be extended under 37 C.F.R. § 1.136(a).

The request was signed by John G. Posa on behalf of all attorneys/agents associated with customer number 25006. All attorneys/agents associated with customer number 25006 have been withdrawn.

Applicant is reminded that there is no attorney of record at this time.

The correspondence address has been changed and is copied below.

Telephone inquiries concerning this decision should be directed to Kimberly Inabinet at 571-272-4618.

/Kimberly Inabinet/
Kimberly Inabinet
Petitions Examiner
Office of Petitions

cc: Myles Kobren
400 S. Oyster Bay Road
Suite 301
Hicksville, NY 11801

UNITED STATES PATENT AND TRADEMARK OFFICE

UNITED STATES DEPARTMENT OF COMMERCE
United States Patent and Trademark Office
Address: COMMISSIONER FOR PATENTS
P.O. Box 1450
Alexandria, Virginia 22313-1450
www.uspto.gov

APPLICATION NUMBER	FILING OR 371(C) DATE	FIRST NAMED APPLICANT	ATTY. DOCKET NO./TITLE
12/549,133	08/27/2009	Myles Kobren	MYK-10202/29

CONFIRMATION NO. 8390

POWER OF ATTORNEY NOTICE

25006
GIFFORD, KRASS, SPRINKLE,ANDERSON & CITKOWSKI, P.C
PO BOX 7021
TROY, MI 48007-7021

OC000000053637194

Date Mailed: 04/10/2012

NOTICE REGARDING CHANGE OF POWER OF ATTORNEY

This is in response to the Power of Attorney filed 03/28/2012.

- The withdrawal as attorney in this application has been accepted. Future correspondence will be mailed to the new address of record. 37 CFR 1.33.

/kainabinet/

Office of Data Management, Application Assistance Unit (571) 272-4000, or (571) 272-4200, or 1-888-786-0101

UNITED STATES PATENT AND TRADEMARK OFFICE

Commissioner for Patents
United States Patent and Trademark Office
P.O. Box 1450
Alexandria, VA 22313-1450
www.uspto.gov

KILPATRICK TOWNSEND & STOCKTON LLP
TWO EMBARCADERO CENTER
EIGHTH FLOOR
SAN FRANCISCO CA 94111-3834

MAILED
DEC 13 2011
OFFICE OF PETITIONS

In re Application of :
Deyuan Xiao et al :
Application No. 12/549,192 :
Filed: August 27, 2009 :
Attorney Docket No. 87720-774946 (019310US) :

ON PETITION

This is a decision on the petition filed November 17, 2011 under 37 CFR 1.137(b), to revive the above-identified application.

The petition is **GRANTED.**

The above-identified application became abandoned for failure to submit the Issue fee and Publication Fee in a timely manner in reply to the Notice of Allowance mailed August 15, 2011, which set a statutory period for reply of three (3) months. Accordingly, the above-identified application became abandoned on November 16, 2011.

The petition satisfies the conditions for revival pursuant to the provisions of 37 CFR 1.137(b) in that (1) the reply in the form of payment of the Issue fee and Publication Fee; (2) the petition fee; (3) the required statement of unintentional delay have been received. Accordingly, the issue fee is accepted as having been unintentionally delayed.

Telephone inquiries concerning this decision should be directed to the undersigned at (571) 272-3210.

This matter is being referred to the Office of Data Management for further processing.

Irvin Dingle
Petitions Examiner
Office of Petitions

PTO/SB/20PCT-KR (06-10)
Approved for use through 01/31/2012. OMB 0651-0058
U.S. Patent and Trademark Office; U. S. DEPARTMENT OF COMMERCE
Under the Paperwork Reduction Act of 1995, no persons are required to respond to a collection of information unless it displays a valid OMB control number.

REQUEST FOR PARTICIPATION IN THE PATENT COOPERATION TREATY - PATENT PROSECUTION HIGHWAY (PCT-PPH) PILOT PROGRAM BETWEEN THE KOREAN INTELLECTUAL PROPERTY OFFICE (KIPO) AND THE USPTO

Application No:	12/549,218	Filing date:	27 August 2009
First Named Inventor:	David K. Stroup		
Title of the Invention:	Fluid-Transfer Collection Assembly Including Breakable Vial and Method of Using Same		

THIS REQUEST FOR PARTICIPATION IN THE PCT-PPH PILOT PROGRAM ALONG WITH THE REQUIRED DOCUMENTS MUST BE SUBMITTED VIA EFS-WEB. INFORMATION REGARDING EFS-WEB IS AVAILABLE AT HTTP://WWW.USPTO.GOV/EBC/EFS_HELP.HTML

APPLICANT HEREBY REQUESTS PARTICIPATION IN THE PCT-PPH PROGRAM AND PETITIONS TO MAKE THE ABOVE-IDENTIFIED APPLICATION SPECIAL UNDER THE PCT-PPH PROGRAM.

The above-identified application is (1) a national stage entry of the corresponding PCT application, or (2) a national stage entry of another PCT application which claims priority to the corresponding PCT application, or (3) a national application that claims domestic/ foreign priority to the corresponding PCT application, or (4) a national application which forms the basis for the priority claim in the corresponding PCT application, or (5) a continuing application of a U.S. application that satisfies one of (1) to (4) above, or (6) a U.S. application that claims domestic benefit to a U.S. provisional application which forms the basis for the priority claim in the corresponding PCT application.

The corresponding PCT application number(s) is/are: PCT/US2009/55233

The international date of the corresponding PCT application(s) is/are: 27 August 2009

I. List of Required Documents:

a. **A copy of the latest international work product (WO/ISA, WO/IPEA, or IPER) in the above–identified corresponding PCT application(s)**

☐ Is attached.

☒ Is not attached because the document is already in the U.S. application.

b. **A copy of all claims which were indicated as having novelty, inventive step and industrial applicability in the above-identified corresponding PCT application(s).**

☒ Is attached.

☐ Is not attached because the document is already in the U.S. application.

c. **English translations of the documents in a. and b. above are attached (if the documents are not in the English language). A statement that the English translation is accurate is attached for the document in b. above.**

This collection of information is required by 35 U.S.C. 119, 37 CFR 1.55, and 37 CFR 1.102(d). The information is required to obtain or retain a benefit by the public, which is to file (and by the USPTO to process) an application. Confidentiality is governed by 35 U.S.C. 122 and 37 CFR 1.11 and 1.14. This collection is estimated to take 2 hours to complete, including gathering, preparing, and submitting the completed application form to the USPTO. Time will vary depending upon the individual case. Any comments on the amount of time you require to complete this form and/or suggestions for reducing this burden should be sent to the Chief Information Officer, U.S. Patent and Trademark Office, U.S. Department of Commerce, P.O. Box 1450, Alexandria, VA 22313-1450. DO NOT SEND FEES OR COMPLETED FORMS TO THIS ADDRESS.

Approved for use through 01/31/2012. OMB 0651-0058
U.S.Patent and Trademark Office; U.S. DEPARTMENT OF COMMERCE
Under the Paperwork Reduction Act of 1995, no persons are required to respond to a collection of information unless it displays a valid OMB control number.

REQUEST FOR PARTICIPATION IN THE PCT-PPH PILOT PROGRAM BETWEEN THE KIPO AND THE USPTO

(continued)

Application No.:	12/549,218
First Named Inventor:	David K. Stroup

d. **(1) An information disclosure statement listing the documents cited in the international work products (ISR, WO/ISA, WO/IPEA, IPER) of the corresponding PCT application.**

☐ Is attached

☒ Has already been filed in the above-identified U.S. application on 18 May 2010

(2) Copies of all documents (except) for U.S. patents or U.S. patent application publications)

☒ Are attached.

Have already been filed in the above-identified U.S. application on 18 May 2010

II. Claims Correspondence Table:

Claims in US Application	Patentable Claims in the corresponding PCT Application	Explanation regarding the correspondence
1-20	1-20	same claims

III. All the claims in the US application sufficiently correspond to the patentable claims in the corresponding PCT application.

Signature /Stephen C. Beuerle/	Date December 15, 2010
Name (Print/Typed) Stephen C. Beuerle	Registration Number 38,380

Privacy Act Statement

The **Privacy Act of 1974 (P.L. 93-579)** requires that you be given certain information in connection with your submission of the attached form related to a patent application or patent. Accordingly, pursuant to the requirements of the Act, please be advised that: (1) the general authority for the collection of this information is 35 U.S.C. 2(b)(2); (2) furnishing of the information solicited is voluntary; and (3) the principal purpose for which the information is used by the U.S. Patent and Trademark Office is to process and/or examine your submission related to a patent application or patent. If you do not furnish the requested information, the U.S. Patent and Trademark Office may not be able to process and/or examine your submission, which may result in termination of proceedings or abandonment of the application or expiration of the patent.

The information provided by you in this form will be subject to the following routine uses:

1. The information on this form will be treated confidentially to the extent allowed under the Freedom of Information Act (5 U.S.C. 552) and the Privacy Act (5 U.S.C 552a). Records from this system of records may be disclosed to the Department of Justice to determine whether disclosure of these records is required by the Freedom of Information Act.
2. A record from this system of records may be disclosed, as a routine use, in the course of presenting evidence to a court, magistrate, or administrative tribunal, including disclosures to opposing counsel in the course of settlement negotiations.
3. A record in this system of records may be disclosed, as a routine use, to a Member of Congress submitting a request involving an individual, to whom the record pertains, when the individual has requested assistance from the Member with respect to the subject matter of the record.
4. A record in this system of records may be disclosed, as a routine use, to a contractor of the Agency having need for the information in order to perform a contract. Recipients of information shall be required to comply with the requirements of the Privacy Act of 1974, as amended, pursuant to 5 U.S.C. 552a(m).
5. A record related to an International Application filed under the Patent Cooperation Treaty in this system of records may be disclosed, as a routine use, to the International Bureau of the World Intellectual Property Organization, pursuant to the Patent Cooperation Treaty.
6. A record in this system of records may be disclosed, as a routine use, to another federal agency for purposes of National Security review (35 U.S.C. 181) and for review pursuant to the Atomic Energy Act (42 U.S.C. 218(c)).
7. A record from this system of records may be disclosed, as a routine use, to the Administrator, General Services, or his/her designee, during an inspection of records conducted by GSA as part of that agency's responsibility to recommend improvements in records management practices and programs, under authority of 44 U.S.C. 2904 and 2906. Such disclosure shall be made in accordance with the GSA regulations governing inspection of records for this purpose, and any other relevant (*i.e.*, GSA or Commerce) directive. Such disclosure shall not be used to make determinations about individuals.
8. A record from this system of records may be disclosed, as a routine use, to the public after either publication of the application pursuant to 35 U.S.C. 122(b) or issuance of a patent pursuant to 35 U.S.C. 151. Further, a record may be disclosed, subject to the limitations of 37 CFR 1.14, as a routine use, to the public if the record was filed in an application which became abandoned or in which the proceedings were terminated and which application is referenced by either a published application, an application open to public inspection or an issued patent.
9. A record from this system of records may be disclosed, as a routine use, to a Federal, State, or local law enforcement agency, if the USPTO becomes aware of a violation or potential violation of law or regulation.

UNITED STATES PATENT AND TRADEMARK OFFICE

UNITED STATES DEPARTMENT OF COMMERCE
United States Patent and Trademark Office
Address: COMMISSIONER FOR PATENTS
P.O. Box 1450
Alexandria, Virginia 22313-1450
www.uspto.gov

APPLICATION NO.	FILING DATE	FIRST NAMED INVENTOR	ATTORNEY DOCKET NO.	CONFIRMATION NO.
12/549,218	08/27/2009	David Karl Stroup	115591-003UTL	8572

27189 7590 03/16/2011
PROCOPIO, CORY, HARGREAVES & SAVITCH LLP
525 B STREET
SUITE 2200
SAN DIEGO, CA 92101

EXAMINER
SHIBUYA, MARK LANCE

ART UNIT	PAPER NUMBER
1641	

NOTIFICATION DATE	DELIVERY MODE
03/16/2011	ELECTRONIC

Please find below and/or attached an Office communication concerning this application or proceeding.

The time period for reply, if any, is set in the attached communication.

Notice of the Office communication was sent electronically on above-indicated "Notification Date" to the following e-mail address(es):

docketing@procopio.com
PTONotifications@procopio.com

UNITED STATES PATENT AND TRADEMARK OFFICE

MAR 1 6 2011

Commissioner for Patents
United States Patent and Trademark Office
P.O. Box 1450
Alexandria, VA 22313-1450
www.uspto.gov

PROCOPIO, CORY, HARGREAVES & SAVITCH LLP
530 B Street
Suite 2100
San Diego, CA 92101

In re Application of	:	
DAVID KARL STROUP	:	DECISION ON REQUEST TO
Application No. 12/549,218	:	PARTICIPATE IN PATENT
Filed: August 27, 2009	:	PROSECUTION HIGHWAY
Attorney Docket No.: 115591-003UTL	:	PROGRAM AND PETITION
	:	TO MAKE SPECIAL UNDER
	:	37 CFR 1.102(d)

This is a decision on the request to participate in the Patent Cooperation Treaty - Patent Prosecution Highway (PCT-PPH) program and the petition under 37 CFR 1.102(d), filed December 15, 2010, to make the above-identified application special.

The request and petition are **GRANTED**.

A grantable request to participate in the PCT-PPH program and petition to make special require:

(1) The U.S. application is (1) a national stage entry of the corresponding PCT application, or (2) a national stage entry of another PCT application which claims priority to the corresponding PCT application, or (3) a national stage application that claims domestic/foreign priority to the corresponding PCT application, or (4) a national application which forms the basis for the priority claim in the corresponding PCT application, or (5) a continuing application of a U.S. application that satisfies one of (1) to (4) above, or (6) a U.S. application that claims domestic benefit to a U.S. provisional application which forms the basis for the priority claim in the corresponding PCT application;
(2) The latest work product in the international phase of the PCT application corresponding to the U.S. application, namely the WO/ISA, or the WO/IPEA, or the IPER, indicates at least one claim in the PCT application has novelty, inventive step and industrial applicability;
(3) All the claims in the U.S. application must sufficiently correspond or be amended to sufficiently correspond to one or more of those claims indicated as having novelty, inventive step and industrial applicability and free of any observation described in Box VIII in the latest work product of the corresponding PCT application;
(4) Examination of the U.S. application has not begun;
(5) Applicant must submit a copy of latest international work product, WO/ISA, or WO/IPEA or IPER, which indicated that the claim(s) has/have novelty, inventive step and industrial applicability along with an English translation thereof if the copy of the latest international work product is not in the English language;

(6) Applicant must submit the claims from the corresponding PCT application which were indicated as having novelty, inventive step and industrial applicability in the latest work product of the PCT application along with an English translation thereof and a statement that the English translation is accurate if the claims are not in the English language;
(7) Applicant must submit a claim correspondence table in English; and
(8) Applicant must submit an IDS listing the documents cited in the international work products (ISR, WO/ISA, WO/IPEA, IPER) of the PCT application along with copies of documents except U.S. patents or U.S. patent application publications.

The request to participate in the PCT-PPH program and petition comply with the above requirements. Accordingly, the above-identified application has been accorded "special" status.

Telephone inquiries concerning this decision should be directed to Cecilia Tsang at 571-272-0562.

All other inquiries concerning the examination or status of the application should be directed to Patent Application Information Retrieval (PAIR) system at the http://www.uspto.gov/ebc/index.html.

The application is being forwarded to the examiner for action on the merits commensurate with this decision.

Cecilia Tsang
Supervisory Patent Examiner
TC 1600

UNITED STATES PATENT AND TRADEMARK OFFICE

Commissioner for Patents
United States Patent and Trademark Office
P.O. Box 1450
Alexandria, VA 22313-1450
www.uspto.gov

COX SMITH MATTHEWS INCORPORATED
112 EAST PECAN STREET, SUITE 1800
SAN ANTONIO, TX 78205-1521

MAILED
SEP 17 2010
OFFICE OF PETITIONS

In re Application of
Peter Koepke et al.
Application No. 12/549,268
Filed: August 27, 2009
Attorney Docket No. **028947.0101D1US**

DECISION ON PETITION
TO WITHDRAW
FROM RECORD

This is a decision on the Request to Withdraw as attorney or agent of record under 37 CFR. § 1.36(b), filed February 23, 2010.

The request is **NOT APPROVED** as moot.

A review of the file record indicates that the power of attorney to attorneys/agents associated with Customer Number 00716 has been revoked by the applicants of the patent application on September 2, 2010. Accordingly, the request to withdraw under 37 CFR § 1.36(b) is moot.

All future communications from the Office will continue to be directed to the below-listed address until otherwise notified by applicant.

Telephone inquires concerning this decision should be directed to the undersigned at 571-272-4584.

/JoAnne Burke/
JoAnne Burke
Petitions Examiner
Office of Petitions

cc: PATTON BOGGS LLP
8484 WESTPARK DRIVE
SUITE 900
MCLEAN VA 22102

UNITED STATES PATENT AND TRADEMARK OFFICE

UNITED STATES DEPARTMENT OF COMMERCE
United States Patent and Trademark Office
Address: COMMISSIONER FOR PATENTS
P.O. Box 1450
Alexandria, Virginia 22313-1450
www.uspto.gov

APPLICATION NO.	FILING DATE	FIRST NAMED INVENTOR	ATTORNEY DOCKET NO.	CONFIRMATION NO.
12/549,276	08/27/2009	Giovanni Donelli	P8099US1	8691

82427 7590 01/28/2011
KRAMER LEVIN NAFTALIS & FRANKEL LLP
1177 Avenue of the Americas
New York, NY 10036

EXAMINER

ART UNIT	PAPER NUMBER
2161	

NOTIFICATION DATE	DELIVERY MODE
01/28/2011	ELECTRONIC

Please find below and/or attached an Office communication concerning this application or proceeding.

The time period for reply, if any, is set in the attached communication.

Notice of the Office communication was sent electronically on above-indicated "Notification Date" to the following e-mail address(es):

klpatent@kramerlevin.com

UNITED STATES PATENT AND TRADEMARK OFFICE

Commissioner for Patents
United States Patent and Trademark Office
P.O. Box 1450
Alexandria, VA 22313-1450
www.uspto.gov

KRAMER LEVIN NAFTALIS & FRANKEL LLP
1177 Avenue of the Americas
New York NY 10036

In re Application of:
DONELLI, Giovanni
Application No. 12/549,276
Filed: August 27, 2009
For: **ADAPTIVE MAPPING OF SEARCH RESULTS**

DECISION ON PETITION UNDER 37 C.F.R. § 1.84(a)(2) TO ACCEPT COLOR DRAWINGS

This is a decision on the petition under 37 C.F.R. § 1.84(a)(2), filed on October 2, 2009, requesting acceptance of color drawings.

The petition requests that the color drawings of Figures 4A-4F be accepted in lieu of black and white drawings.

A grantable petition under 37 C.F.R. § 1.84(a)(2) must be accompanied by a fee set forth under 37 C.F.R. § 1.17(h), 3 (three) sets of the color drawings in question, and the specification must contain, or be amended to contain, the following language as the first paragraph in that portion of the specification relating to the brief description of the drawings:

"The patent or application file contains at least one drawing executed in color. Copies of this patent or patent application publication with color drawings will be provided by the U.S. Patent and Trademark Office upon request and payment of the necessary fee."

The petition was filed with the required fee and color drawing Figures 4A-4F were filed EFS-Web, therefore, applicant is required to file only one set of drawings. See 74 Federal Register Notice 55200 (October 27, 2009). However, the specification does not contain the required notification described above.

Accordingly, the petition is **DISMISSED**.

Any inquiry regarding this decision should be directed to Eddie C. Lee at (571) 272-1732.

/Eddie C. Lee/

Eddie C. Lee
Quality Assurance Specialist, TC 2100

UNITED STATES PATENT AND TRADEMARK OFFICE

UNITED STATES DEPARTMENT OF COMMERCE
United States Patent and Trademark Office
Address: COMMISSIONER FOR PATENTS
P.O. Box 1450
Alexandria, Virginia 22313-1450
www.uspto.gov

APPLICATION NO.	FILING DATE	FIRST NAMED INVENTOR	ATTORNEY DOCKET NO.	CONFIRMATION NO.
12/549,276	08/27/2009	Giovanni Donelli	P8099US1	8691

82427 7590 05/25/2011
KRAMER LEVIN NAFTALIS & FRANKEL LLP
1177 Avenue of the Americas
New York, NY 10036

EXAMINER
OBERLY, VAN HONG

ART UNIT	PAPER NUMBER
2166	

NOTIFICATION DATE	DELIVERY MODE
05/25/2011	ELECTRONIC

Please find below and/or attached an Office communication concerning this application or proceeding.

The time period for reply, if any, is set in the attached communication.

Notice of the Office communication was sent electronically on above-indicated "Notification Date" to the following e-mail address(es):

klpatent@kramerlevin.com

UNITED STATES PATENT AND TRADEMARK OFFICE

COMMISSIONER FOR PATENTS
UNITED STATES PATENT AND TRADEMARK OFFICE
P.O. BOX 1450
ALEXANDRIA, VA 22313-1450
www.uspto.gov

KRAMER LEVIN NAFTALIS & FRANKEL LLP
1177 Avenue of the Americas
New York, NY 10036

In re Application of:
Giovanni DONELLI
Application No. 12/549,276
Filed: August 27, 2009
For: ADAPTIVE MAPPING OF SEARCH RESULTS

DECISION ON PETITION UNDER 37 C.F.R. § 1.84(a)(2) TO ACCEPT COLOR DRAWINGS

This is a decision on the re-newed petition under 37 C.F.R. § 1.84(a)(2), filed on 08 February 2011, requesting acceptance of color drawings.

The petition requests that the color drawings of Figs. 4A-4F be accepted in lieu of black and white drawing.

A grantable petition under 37 C.F.R. § 1.84(a)(2) must be accompanied by a fee set forth under 37 C.F.R. § 1.17(h), three (3) sets of the color drawings in question, and the specification must contain, or be amended to contain, the following language as the first paragraph in that portion of the specification relating to the brief description of the drawings:

"the file of this patent contains at least one drawing executed in color. Copies of this patent with color drawing(s) will be provided by the Patent and Trademark Office upon request and payment of the necessary fee."

The petition was filed with the required fee and was filed with three (3) sets of color drawings of Figures 4A-4F. The specification did contain the required notification described above.

The petition is **GRANTED**.

/Vincent N. Trans/
Vincent N. Trans, SPRE/QAS
Technology Center 2100
Computer Architecture and Software
(571) 272-3613

UNITED STATES PATENT AND TRADEMARK OFFICE

Commissioner for Patents
United States Patent and Trademark Office
P. O. Box 1450
Alexandria, VA 22313-1450
www.uspto.gov

F. CHAU & ASSOCIATES, LLC
130 WOODBURY ROAD
WOODBURY, NY 11797

MAILED
JUN 23 2011
OFFICE OF PETITIONS

In re Application of :
Hak-Sun Chang et al :
Application No. 12/549,503 : ON PETITION
Filed: August 28, 2009 :
Attorney Docket No. 8071-36-CON-II
OPP2009189

This is a decision on the petition, filed June 22, 2011 under 37 CFR 1.313(c)(2) to withdraw the above-identified application from issue after payment of the issue fee.

The petition is **GRANTED**.

The above-identified application is withdrawn from issue for consideration of a submission under 37 CFR 1.114 (request for continued examination). See 37 CFR 1.313(c)(2).

Petitioner is advised that the issue fee paid on May 25, 2011 in the above-identified application cannot be refunded. If, however, the above-identified application is again allowed, petitioner may request that it be applied towards the issue fee required by the new Notice of Allowance.[1]

Telephone inquiries should be directed to Irvin Dingle at (571) 272-3210.

This matter is being referred to Technology Center AU 2817 for processing of the request for continued examination under 37 CFR 1.114 and for consideration of the concurrently filed Information Disclosure Statement.

/Irvin Dingle/
Irvin Dingle
Petitions Examiner
Office of Petitions

---

[1] The request to apply the issue fee to the new Notice may be satisfied by completing and returning the new Issue Fee Transmittal Form PTOL-85(b), which includes the following language thereon: Commissioner for Patents is requested to apply the Issue Fee and Publication Fee (if any) or re-apply any previously paid issue fee to the application identified above. Petitioner is advised that, whether a fee is indicated as being due or not, the Issue Fee Transmittal Form **must** be completed and timely submitted to avoid abandonment. Note the language in bold text on the first page of the Notice of Allowance and Fee(s) Due (PTOL-85).

UNITED STATES PATENT AND TRADEMARK OFFICE

UNITED STATES DEPARTMENT OF COMMERCE
United States Patent and Trademark Office
Address: COMMISSIONER FOR PATENTS
P.O. Box 1450
Alexandria, Virginia 22313-1450
www.uspto.gov

APPLICATION NO.	FILING DATE	FIRST NAMED INVENTOR	ATTORNEY DOCKET NO.	CONFIRMATION NO.
12/549,521	08/28/2009	Bo Li	21670/0212862-US0	9170

7590 06/21/2011
Huawei Technologies Co., Ltd.
c/o LEASON ELLIS
81 Main Street, Suite 503
White Plains, NY 10601

EXAMINER
YAO, KWANG BIN

ART UNIT	PAPER NUMBER
2473	

MAIL DATE	DELIVERY MODE
06/21/2011	PAPER

DECISION GRANTING PETITION UNDER 37 CFR 1.138(d)

The declaration of express abandonment is recognized

This is in response to the petition under 37 CFR 1.138(d), requesting for a refund of any previously paid search fee and excess claims fee in the above-identified application.

The petition is granted.

The express abandonment is recognized. Any previously paid search fee and excess claims fee are hereby refunded.

Telephone inquiries should be directed to the Office of Data Management at (571) 272-4200.

Mimi Farmer

Patent Publication Branch
Office of Data Management

UNITED STATES PATENT AND TRADEMARK OFFICE

COMMISSIONER FOR PATENTS
UNITED STATES PATENT AND TRADEMARK OFFICE
P.O. BOX 1450
ALEXANDRIA, VA 22313-1450
www.uspto.gov

MAILED

DEC 01 2010

OFFICE OF PETITIONS

Paper No.

QUALCOMM INCORPORATED
5775 MOREHOUSE DR.
SAN DIEGO CA 92121.

In re Application of
Shokrollahi et al.
Application No. 12/549,560
Filed: August 28, 2009
Attorney Docket No. 092830

DECISION ON PETITION
PURSUANT TO 37 C.F.R.
§§ 1.78(a)(3) AND (a)(6)

This is a decision on the petition under 37 CFR §§ 1.78(a)(3) and 1.78(a)(6), filed on April 16, 2010, to accept an unintentionally delayed claim under 35 U.S.C. §§ 120 and 119(e) for the benefit of priority to both the prior-filed provisional application and the prior-filed non-provisional applications, set forth in an amendment to the substitute specification and the Supplemental Application Data Sheet (ADS); each of which was submitted concurrently with this petition.

The petition is **DISMISSED**.

A petition for acceptance of a claim for late priority under 37 CFR §§ 1.78(a)(3) and 1.78(a)(6) is only applicable to those applications filed on or after November 29, 2000 and after the expiration of the period specified in 37 CFR §§ 1.78(a)(2)(ii) and 1.78(a)(5)(ii). In addition, the petition under 37 CFR §§ 1.78(a)(3) and 1.78(a)(6) must be accompanied by:

(1) the reference required by 35 U.S.C. §§ 120 and 119(e) and 37 CFR §§ 1.78(a)(2)(i) and 1.78(a)(5)(i) of the prior-filed applications, unless previously submitted;
(2) the surcharge set forth in § 1.17(t); and
(3) a statement that the entire delay between the date the claim was due under 37 CFR §§ 1.78(a)(2)(ii) and 1.78(a)(5)(ii) and the date the claim was filed was unintentional. The Director may require additional information where there is a question whether the delay was unintentional.

37 C.F.R. § 1.78(a)(3)(iii) requires a statement that the entire delay between the date the claim was due under paragraph (a)(2)(ii) of 37 C.F.R. § 1.78 and the date the claim was filed was unintentional. 37 C.F.R. § 1.78(a)(6)(iii) requires a statement that the entire delay between the date the claim was due under paragraph (a)(5)(ii) of this section and the date the claim was filed was unintentional.

Since the statements contained in this petition and the concurrently submitted Jacobs declaration each varies from the language required by 37 C.F.R. §§ 1.78(a)(3)(iii) and 1.78(a)(6)(iii), these statements are being construed as the statements required by 37 C.F.R. §§ 1.78(a)(3)(iii) and 1.78(a)(6)(iii), and Petitioner must notify the Office if this is not a correct interpretation of these statements.

With this petition, Petitioner has included the surcharge and two statements that are being construed as the statements required by 37 C.F.R. §§ 1.78(a)(3)(iii) and 1.78(a)(6)(iii). As such, requirements (2) and (3) have been satisfied.

The petition does not comply with item (1).

The substitute specification is not acceptable as drafted since it improperly incorporates by reference one prior-filed provisional application and four prior-filed non-provisional applications. An incorporation by reference statement added after an application's filing date is not effective because no new matter can be added to an application after its filing date (*see* 35 U.S.C. § 132(a)). If an incorporation by reference statement is included in an amendment to the specification to add a benefit claim under 35 U.S.C. §§ 119(e) or 120 after the filing date of the application, the amendment would not be proper. When a benefit claim under 35 U.S.C. §§ 119(e) or 120 is submitted after the filing of an application, the reference to the prior application cannot include an incorporation by reference statement of the prior application. *See* Dart Industries v. Banner, 636 F.2d 684, 207 USPQ 273 (C.A.D.C. 1980). *Note* MPEP §§ 201.06(c) and 608.04(b).

Before the petition under 37 CFR §§ 1.78(a)(3) and 1.78(a)(6) can be granted, a renewed petition and another substitute specification (along with an amendment directing the entry of the same) to correct the above matters are required.

Telephone inquiries regarding this decision should be directed to Senior Attorney Paul Shanoski at (571) 272-3225. All other inquiries concerning examination procedures or status of the application should be directed to the Technology Center.

Chris Bottorff
Supervisor
Office of Petitions

UNITED STATES PATENT AND TRADEMARK OFFICE

Commissioner for Patents
United States Patent and Trademark Office
P.O. Box 1450
Alexandria, VA 22313-1450
www.uspto.gov

MAILED

APR 27 2011

OFFICE OF PETITIONS

Paper No.

QUALCOMM INCORPORATED
5775 MOREHOUSE DR.
SAN DIEGO CA 92121

In re Application of
Shokrollahi et al.
Application No. 12/549,560
Filed: August 28, 2009
Attorney Docket No. 092830

: DECISION ON RENEWED PETITION
: PURSUANT TO 37 C.F.R.
: §§ 1.78(a)(3) AND (a)(6)

This is a decision on the renewed petition under 37 CFR §§ 1.78(a)(3) and 1.78(a)(6), filed on February 1, 2011, to accept an unintentionally delayed claim under 35 U.S.C. §§ 120 and 119(e) for the benefit of priority to both a prior-filed provisional application and a prior-filed non-provisional application, set forth in a substitute specification and a Supplemental Application Data Sheet (ADS); each of which was submitted concurrently with this renewed petition.

The petition is **GRANTED**.

A petition for acceptance of a claim for late priority under 37 CFR §§ 1.78(a)(3) and 1.78(a)(6) is only applicable to those applications filed on or after November 29, 2000 and after the expiration of the period specified in 37 CFR §§ 1.78(a)(2)(ii) and 1.78(a)(5)(ii). In addition, the petition under 37 CFR §§ 1.78(a)(3) and 1.78(a)(6) must be accompanied by:

(1) the reference required by 35 U.S.C. §§ 120 and 119(e) and 37 CFR §§ 1.78(a)(2)(i) and 1.78(a)(5)(i) of the prior-filed applications, unless previously submitted;
(2) the surcharge set forth in § 1.17(t); and
(3) a statement that the entire delay between the date the claim was due under 37 CFR §§ 1.78(a)(2)(ii) and 1.78(a)(5)(ii) and the date the claim was filed was unintentional. The Director may require additional information where there is a question whether the delay was unintentional.

Additionally, the instant nonprovisional application must be pending at the time of filing of the reference to the prior-filed provisional application as required by 37 C.F.R. § 1.78(a)(5)(ii). Further, the nonprovisional application claiming the benefit of the prior-filed provisional application must have been filed within twelve months of the filing date of the prior-filed provisional application.

37 C.F.R. § 1.78(a)(3)(iii) requires a statement that the entire delay between the date the claim was due under paragraph (a)(2)(ii) of 37 C.F.R. § 1.78 and the date the claim was filed was unintentional. 37 C.F.R. § 1.78(a)(6)(iii) requires a statement that the entire delay between the date the claim was due under paragraph (a)(5)(ii) of this section and the date the claim was filed was unintentional.

Since the statements contained in this renewed petition varies from the language required by 37 C.F.R. §§ 1.78(a)(3)(iii) and 1.78(a)(6)(iii), these statements are being construed as the statements required by 37 C.F.R. §§ 1.78(a)(3)(iii) and 1.78(a)(6)(iii), and Petitioner must notify the Office if this is not a correct interpretation of these statements.

An original petition under 37 CFR §§ 1.78(a)(3) and 1.78(a)(6) was filed on April 16, 2010 along with, *inter alia*, the required surcharge. The original petition was dismissed via the mailing of a decision on December 1, 2010.

With this renewed petition, Petitioner has submitted a substitute specification along with an amendment directing the entry of the same, a properly titled and executed Substitute Application Data Sheet (ADS), and as such, item (1) above has been satisfied. Petitioner has further submitted statements that are being construed as the statements required by 37 C.F.R. §§ 1.78(a)(3)(iii) and 1.78(a)(6)(iii). As such, requirements (2) and (3) have been satisfied.

All the above requirements having been satisfied, the late claim for benefit of priority under 35 U.S.C. §§ 120 and 119(e) is accepted as being unintentionally delayed.

The granting of the renewed petition to accept the delayed benefit claim to the prior-filed applications under 37 CFR §§ 1.78(a)(3) and 1.78(a)(6) should not be construed as meaning that this application is entitled to the benefit of the filing date of the prior-filed applications. In order for this

application to be entitled to the benefit of the prior-filed applications, all other requirements under 35 U.S.C. §§ 120 and 1.78(a)(1) and (a)(2) and under 35 U.S.C. § 119(e) and 37 CFR §§ 1.78(a)(4) and (a)(5) must be met. Similarly, the fact that the corrected Filing Receipt accompanying this decision on petition includes the prior-filed applications should not be construed as meaning that applicant is entitled to the claim for benefit of priority to the prior-filed applications noted thereon. Accordingly, the examiner will, in due course, consider this benefit claim and determine whether the application is entitled to the benefit of the earlier filing date.

A corrected Filing Receipt, which includes the priority claim to the prior-filed applications, accompanies this decision on petition.

The Technology Center will be notified of this decision, and jurisdiction over this application is transferred to the Technology Center, so that the application may receive further processing. The Technology Center's support staff will notify the Examiner of this decision, so that the present application can receive further processing in due course.

Telephone inquiries regarding *this decision* should be directed to Senior Attorney Paul Shanoski at (571) 272-3225.[1] All other inquiries concerning examination procedures or status of the application should be directed to the Technology Center.

Anthony Knight
Director
Office of Petitions

ATTACHMENT : Corrected Filing Receipt

[1] Petitioner will note that all practice before the Office should be in writing, and the action of the Office will be based exclusively on the written record in the Office. See 37 C.F.R. § 1.2. As such, Petitioner is reminded that no telephone discussion may be controlling or considered authority for Petitioner's further action(s).

UNITED STATES PATENT AND TRADEMARK OFFICE

UNITED STATES DEPARTMENT OF COMMERCE
United States Patent and Trademark Office
Address: COMMISSIONER FOR PATENTS
P.O. Box 1450
Alexandria, Virginia 22313-1450
www.uspto.gov

APPLICATION NUMBER	FILING or 371(c) DATE	GRP ART UNIT	FIL FEE REC'D	ATTY.DOCKET.NO	TOT CLAIMS	IND CLAIMS
12/549,560	08/28/2009	2819	3152	092830	36	8

CONFIRMATION NO. 9257

CORRECTED FILING RECEIPT

23696
QUALCOMM INCORPORATED
5775 MOREHOUSE DR.
SAN DIEGO, CA 92121

OC000000047199413

Date Mailed: 04/26/2011

Receipt is acknowledged of this non-provisional patent application. The application will be taken up for examination in due course. Applicant will be notified as to the results of the examination. Any correspondence concerning the application must include the following identification information: the U.S. APPLICATION NUMBER, FILING DATE, NAME OF APPLICANT, and TITLE OF INVENTION. Fees transmitted by check or draft are subject to collection. Please verify the accuracy of the data presented on this receipt. **If an error is noted on this Filing Receipt, please submit a written request for a Filing Receipt Correction. Please provide a copy of this Filing Receipt with the changes noted thereon. If you received a "Notice to File Missing Parts" for this application, please submit any corrections to this Filing Receipt with your reply to the Notice. When the USPTO processes the reply to the Notice, the USPTO will generate another Filing Receipt incorporating the requested corrections**

Applicant(s)

M. Amin Shokrollahi, Preverenges, SWITZERLAND;
Soren Lassen, Glebe, AUSTRALIA;
Richard Karp, Berkeley, CA;

Assignment For Published Patent Application

QUALCOMM Incorporated, San Diego, CA

Power of Attorney: None

Domestic Priority data as claimed by applicant

This appln claims benefit of 61/235,285 08/19/2009
and is a CIP of 11/842,102 08/20/2007 PAT 7,633,413
which is a CON of 11/356,303 02/15/2006 PAT 7,265,688
which is a CON of 11/031,331 01/07/2005 PAT 7,030,785
which is a CON of 10/459,370 06/10/2003 PAT 6,856,263
which claims benefit of 60/388,129 06/11/2002

Foreign Applications (You may be eligible to benefit from the **Patent Prosecution Highway** program at the USPTO. Please see http://www.uspto.gov for more information.)

If Required, Foreign Filing License Granted: 09/10/2009

The country code and number of your priority application, to be used for filing abroad under the Paris Convention, is **US 12/549,560**

Projected Publication Date: 05/05/2011

Non-Publication Request: No

Early Publication Request: No

Title

Systems and processes for decoding chain reaction codes through inactivation

Preliminary Class

341

PROTECTING YOUR INVENTION OUTSIDE THE UNITED STATES

Since the rights granted by a U.S. patent extend only throughout the territory of the United States and have no effect in a foreign country, an inventor who wishes patent protection in another country must apply for a patent in a specific country or in regional patent offices. Applicants may wish to consider the filing of an international application under the Patent Cooperation Treaty (PCT). An international (PCT) application generally has the same effect as a regular national patent application in each PCT-member country. The PCT process **simplifies** the filing of patent applications on the same invention in member countries, but **does not result** in a grant of "an international patent" and does not eliminate the need of applicants to file additional documents and fees in countries where patent protection is desired.

Almost every country has its own patent law, and a person desiring a patent in a particular country must make an application for patent in that country in accordance with its particular laws. Since the laws of many countries differ in various respects from the patent law of the United States, applicants are advised to seek guidance from specific foreign countries to ensure that patent rights are not lost prematurely.

Applicants also are advised that in the case of inventions made in the United States, the Director of the USPTO must issue a license before applicants can apply for a patent in a foreign country. The filing of a U.S. patent application serves as a request for a foreign filing license. The application's filing receipt contains further information and guidance as to the status of applicant's license for foreign filing.

Applicants may wish to consult the USPTO booklet, "General Information Concerning Patents" (specifically, the section entitled "Treaties and Foreign Patents") for more information on timeframes and deadlines for filing foreign patent applications. The guide is available either by contacting the USPTO Contact Center at 800-786-9199, or it can be viewed on the USPTO website at http://www.uspto.gov/web/offices/pac/doc/general/index.html.

For information on preventing theft of your intellectual property (patents, trademarks and copyrights), you may wish to consult the U.S. Government website, http://www.stopfakes.gov. Part of a Department of Commerce initiative, this website includes self-help "toolkits" giving innovators guidance on how to protect intellectual property in specific countries such as China, Korea and Mexico. For questions regarding patent enforcement issues, applicants may call the U.S. Government hotline at 1-866-999-HALT (1-866-999-4158).

LICENSE FOR FOREIGN FILING UNDER

Title 35, United States Code, Section 184

Title 37, Code of Federal Regulations, 5.11 & 5.15

GRANTED

The applicant has been granted a license under 35 U.S.C. 184, if the phrase "IF REQUIRED, FOREIGN FILING LICENSE GRANTED" followed by a date appears on this form. Such licenses are issued in all applications where the conditions for issuance of a license have been met, regardless of whether or not a license may be required as

set forth in 37 CFR 5.15. The scope and limitations of this license are set forth in 37 CFR 5.15(a) unless an earlier license has been issued under 37 CFR 5.15(b). The license is subject to revocation upon written notification. The date indicated is the effective date of the license, unless an earlier license of similar scope has been granted under 37 CFR 5.13 or 5.14.

This license is to be retained by the licensee and may be used at any time on or after the effective date thereof unless it is revoked. This license is automatically transferred to any related applications(s) filed under 37 CFR 1.53(d). This license is not retroactive.

The grant of a license does not in any way lessen the responsibility of a licensee for the security of the subject matter as imposed by any Government contract or the provisions of existing laws relating to espionage and the national security or the export of technical data. Licensees should apprise themselves of current regulations especially with respect to certain countries, of other agencies, particularly the Office of Defense Trade Controls, Department of State (with respect to Arms, Munitions and Implements of War (22 CFR 121-128)); the Bureau of Industry and Security, Department of Commerce (15 CFR parts 730-774); the Office of Foreign AssetsControl, Department of Treasury (31 CFR Parts 500+) and the Department of Energy.

NOT GRANTED

No license under 35 U.S.C. 184 has been granted at this time, if the phrase "IF REQUIRED, FOREIGN FILING LICENSE GRANTED" DOES NOT appear on this form. Applicant may still petition for a license under 37 CFR 5.12, if a license is desired before the expiration of 6 months from the filing date of the application. If 6 months has lapsed from the filing date of this application and the licensee has not received any indication of a secrecy order under 35 U.S.C. 181, the licensee may foreign file the application pursuant to 37 CFR 5.15(b).

Doc Code: PET.AUTO **Document Description: Petition automatically granted by EFS-Web**	PTO/SB/83 U.S. Patent and Trademark Office Department of Commerce

Electronic Petition Request	**REQUEST FOR WITHDRAWAL AS ATTORNEY OR AGENT AND CHANGE OF CORRESPONDENCE ADDRESS**
Application Number	12549583
Filing Date	28-Aug-2009
First Named Inventor	Dennis Schultze
Art Unit	1638
Examiner Name	EILEEN O HARA
Attorney Docket Number	1423-148
Title	Soybean Cultivar 8922462

◉ Please withdraw me as attorney or agent for the above identified patent application and the practitioners of record associated with Customer Number: 32905

The reason(s) for this request are those described in 37 CFR:

10.40(b)(4)

Certifications

☒ I/We have given reasonable notice to the client, prior to the expiration of the response period, that the practitioner(s) intend to withdraw from employment

☒ I/We have delivered to the client or a duly authorized representative of the client all papers and property (including funds) to which the client is entitled

☒ I/We have notified the client of any responses that may be due and the time frame within which the client must respond

Change the correspondence address and direct all future correspondence to:
The address of the first named inventor or assignee that has properly made itself of record pursuant to 37 CFR 3.71, associated with Customer Number: 26263

I am authorized to sign on behalf of myself and all withdrawing practitioners.

Signature	/Robert J. Jondle/
Name	Robert J. Jondle
Registration Number	33915

UNITED STATES PATENT AND TRADEMARK OFFICE

Commissioner for Patents
United States Patent and Trademark Office
P.O. Box 1450
Alexandria, VA 22313-1450
www.uspto.gov

Decision Date : December 29, 2011

In re Application of :

Dennis Schultze

Application No : 12549583

Filed : 28-Aug-2009

Attorney Docket No : 1423-148

DECISION ON REQUEST TO WITHDRAW AS ATTORNEY/AGENTOF RECORD

This is an electronic decision on the Request to Withdraw as attorney or agent of record under 37 CFR§ 1.36(b), filed December 29, 2011

The request is **APPROVED**

The request was signed by Robert J. Jondle (registration no. 33915) on behalf of all attorneys/agents associated with Customer Number 32905 . All attorneys/agents associated with Customer Number 32905 have been withdrawn.

Since there are no remaining attorneys of record, all future communications from the Office will be directed to the first named inventor or assignee that has properly made itself of record pursuant to 37 CFR 3.71, with Customer number 26263 .

As a reminder, requester is required to inform the first named inventor or assignee that has properly made itself of record pursuant to 37 CFR 3.71 of the electronically processed petition.

Telephone inquiries concerning this decision should be directed to the Patent Electronic Business Center (EBC) at 866-217-9197.

Office of Petitions

UNITED STATES PATENT AND TRADEMARK OFFICE

UNITED STATES DEPARTMENT OF COMMERCE
United States Patent and Trademark Office
Address: COMMISSIONER FOR PATENTS
P.O. Box 1450
Alexandria, Virginia 22313-1450
www.uspto.gov

APPLICATION NO.	FILING DATE	FIRST NAMED INVENTOR	ATTORNEY DOCKET NO.	CONFIRMATION NO.
12/549,583	08/28/2009	Dennis L. Schultze	1423-148	9295

26263 7590 01/09/2012
SNR DENTON US LLP
P.O. BOX 061080
CHICAGO, IL 60606-1080

EXAMINER
O HARA, EILEEN B

ART UNIT	PAPER NUMBER
1638	

MAIL DATE	DELIVERY MODE
01/09/2012	PAPER

Please find below and/or attached an Office communication concerning this application or proceeding.

The time period for reply, if any, is set in the attached communication.

UNITED STATES PATENT AND TRADEMARK OFFICE

Commissioner for Patents
United States Patent and Trademark Office
P.O. Box 1450
Alexandria, VA 22313-1450
www.uspto.gov

JAN 0 9 2012

JONDLE & ASSOCIATES P.C.
858 HAPPY CANYON ROAD SUITE 230
CASTLE ROCK CO 80108

In re Application of:	:
Dennis L. Schultze	:
Serial No.: 12/549,583	: PETITION DECISION
Filed: August 28, 2009	:
Attorney Docket No.: **1423-148**	

This is in response to the petition under 37 CFR § 1.59(b), filed December 21, 2011, to expunge information from the above identified application. This application has not been allowed.

Petitioner requests that the Reply to Request for Information under 37 CFR 1.105, and attachment thereto, submitted to the Patent Office on December 21, 2011, be expunged from the record. Petitioner states either: (A) that the information contains trade secret material, proprietary material and/or material that is subject to a protective order which has not been made public; or (B) that the information submitted was unintentionally submitted and the failure to obtain its return would cause irreparable harm to the party who submitted the information or to the party in interest on whose behalf the information was submitted, and the information has not otherwise been made public. The petition fee set forth in 37 CFR § 1.17(g) has been paid.

This is an examined application which is currently under non-final rejection. As such the information provided has been reviewed, in part, but proceedings in the application have not been terminated. As stated in M.P.E.P. 724, upon allowance or other action closing prosecution in an application, petition may be made for return of Proprietary information. The information cannot be expunged at this time.

The petition is **DISMISSED**. Petitioner may resubmit the petition subsequent to a Notice of Allowability or *ex parte Quayle* action being mailed in the application. No additional petition fee will be required at that time.

Should there be any questions about this decision please contact Marianne C. Seidel by letter addressed to Director, TC 1600, at the address listed above, or by telephone at 571-272-0584 or by facsimile sent to the general Office facsimile number, 571-273-8300.

/MC Seidel/
Marianne C. Seidel, Quality Assurance Specialist
Technology Center 1600

UNITED STATES PATENT AND TRADEMARK OFFICE

Commissioner for Patents
United States Patent and Trademark Office
P.O. Box 1450
Alexandria, VA 22313-1450
www.uspto.gov

HERBERT JOE
P.O. BOX 980608
PARK CITY UT 84098

MAILED

NOV 19 2010

OFFICE OF PETITIONS

ON PETITION

In re Application of :
Yonovitz :
Application No. 12/549,592 :
Filed: August 28, 2009 :
Attorney Docket No. Yonovitz-1 :

This is a decision on the petition under the unintentional provisions of 37 CFR 1.137(b), filed September 14, 2010, to revive the above-identified application.

The petition is GRANTED.

The application became abandoned November 16, 2009 for failure to timely submit a proper reply to the Notice to File Missing Parts of Nonprovisional Application (Notice) mailed September 15, 2009. The Notice set a two month shortened statutory period of time for reply. Notice of Abandonment was mailed May 27, 2010.

A grantable petition under 37 CFR 1.137(b) must be accompanied by: (1) the required reply, unless previously filed; (2) the petition fee as set forth in 37 CFR 1.17(m); (3) a statement that the entire delay in filing the required reply from the due date for the reply until the filing of a grantable petition pursuant to 37 CFR 1.137(b) was unintentional; and (4) any terminal disclaimer (and fee as set forth in 37 CFR 1.20(d)) required by 37 CFR 1.137(d). Where there is a question as to whether either the abandonment or the delay in filing a petition under 37 CFR 1.137 was unintentional, the Director may require additional information. See MPEP 711.03(c)(II)(C) and (D).

In accordance with 37 CFR 1.137(b)(3), a statement that "the entire delay in filing the required reply from the due date for the reply until the filing of a grantable petition pursuant to 37 CFR 1.137(b) was unintentional" is required. Since the statement appearing in the petition varies from the language required by 37 CFR 1.137(b)(3), the statement is being construed as the required statement. Petitioner must notify the Office if this is not a correct reading of the statement appearing in the petition.

The instant petition has been carefully reviewed and found in compliance with the requirements set forth above.

This application is being directed to the Office of Patent Application Processing for further processing.

/ALESIA M. BROWN/

Alesia M. Brown
Petitions Attorney
Office of Petitions

Docket No. 347497US91

IN THE UNITED STATES PATENT AND TRADEMARK OFFICE

IN RE APPLICATION OF: Kengo KIMURA

SERIAL NO:	12/549,615	EXAMINER:	LO, CHRISTOPHER KWOK YEUNG
FILED:	August 28, 2009	GROUP ART UNIT:	2819
FOR:	APPARATUS FOR LIGHTING LEDS		

PETITION UNDER 37 C.F.R. § 1.102

COMMISSIONER FOR PATENTS
ALEXANDRIA, VIRGINIA 22313

SIR:

Special status under the Backlog Reduction Plan is sought for the above-identified application. Copending application number 12/507,313 has been expressly abandoned as required. A copy of the express abandonment filed in the copending application is submitted herewith.

The expressly abandoned application and the instant application are held by the same assignee, SANKEN ELECTRIC CO., LTD. .

Applicant has not filed petitions in more than fourteen (14) other applications requesting special status under this program.

Applicant(s) agrees to make an election without traverse in a telephonic interview if the Office determines that the claims of the application to be made special are directed to two or more independent and distinct inventions.

Respectfully submitted,

OBLON, SPIVAK, McCLELLAND,
MAIER & NEUSTADT, L.L.P.

Brian R. Epstein

Scott A. McKeown
Registration No. 42,866

Brian R. Epstein
Registration No. 60,329

Customer Number
22850
Tel. (703) 413-3000
Fax. (703) 413-2220
(OSMMN 08/10)

COPY

Docket No. 345910US91

IN THE UNITED STATES PATENT AND TRADEMARK OFFICE

IN RE APPLICATION OF: Kengo KIMURA

SERIAL NO: 12/507,313 EXAMINER: LO, CHRISTOHER KWOK YEUNG

FILED: July 22, 2009 GROUP ART UNIT: 2821

FOR: POWER CONVERSION APPARATUS

EXPRESS ABANDONMENT UNDER 37 C.F.R. § 1.138(a)

COMMISSIONER FOR PATENTS
ALEXANDRIA, VIRGINIA 22313

SIR:

Applicant requests that the above-identified application be expressly abandoned as of the filing date of this paper.

Applicant has not and will not file an application that claims the benefit of this application under any provision of title 35, United States Code.

Applicant agrees not to request a refund of any fees paid in this application.

Applicant has not and will not file a new application that claims the same invention claimed in the instant application.

A petition under 37 CFR 1.102 is being filed concurrently herewith in application serial number 12/549,615 for which special status is sought by abandonment of the instant application under the Application Backlog Reduction Stimulus Plan.

The instant application and the application for which special status is being sought under the Application Backlog Reduction Stimulus Plan are held by the same assignee, SANKEN

COPY

COPY

ELECTRIC CO., LTD..

Applicant has not received special status for more than fourteen (14) other applications under this program.

Respectfully submitted,

OBLON, SPIVAK, McCLELLAND,
MAIER & NEUSTADT, L.L.P.

Scott A. McKeown
Registration No. 42,866

Brian R. Epstein
Registration No. 60,329

Customer Number
22850
Tel. (703) 413-3000
Fax. (703) 413-2220
(OSMMN 08/10)

COPY

UNITED STATES PATENT AND TRADEMARK OFFICE

Commissioner for Patents
United States Patent and Trademark Office
P.O. Box 1450
Alexandria, VA 22313-1450
www.uspto.gov

OBLON, SPIVAK, MCCLELLAND MAIER & NEUSTADT, L.L.P.
1940 DUKE STREET
ALEXANDRIA VA 22314

MAILED
DEC 05 2011
OFFICE OF PETITIONS

In re Application of	:	DECISION ON PETITION
KIMURA	:	TO MAKE SPECIAL
Application No. 12/549,615	:	37 CFR 1.102
Filed: August 28, 2009	:	
Attorney Docket No. **347497US91**	:	

This is a decision on the petition under 37 CFR 1.102, filed November 21, 2011, to make the above-identified application special under the Patent Application Backlog Reduction Stimulus Plan which is a pilot program set forth at 74 Federal Register Notice 62285 (November 27, 2009) and 75 Federal register Notice 36063 (June 24, 2010).

The petition is **GRANTED**.

A grantable petition to make an application special under 37 CFR 1.102 and the pilot program as set forth in 74 FR 62285 and 75 FR 36063 must be directed to a nonprovisional application filed prior to October 1, 2009.

The USPTO will accord special status for examination under Patent Application Backlog Reduction Stimulus Plan under the following conditions:

(1) The application for which special status is sought is a nonprovisional application that has an actual filing date earlier than October 1, 2009;

(2) The applicant has another copending nonprovisional application that has an actual filing date earlier than October 1, 2009, and is complete under 37 CFR 1.53;

(3) The application for which special status is sought and the other copending nonprovisional application either are owned by the same party as of October 1, 2009, or name at least one inventor in common;

(4) The applicant files a letter of express abandonment under 37 CFR 1.138(a) in the copending nonprovisional application before it has been taken up for examination and

a) includes a statement that the applicant has not and will not file a new application that claims the same invention claimed in the expressly abandoned application;

b) includes a statement that the applicant has not and will not file an application that claims the benefit of the expressly abandoned application under any provision of title 35, United States Code, and

c) includes a statement that the applicant agrees not to request a refund of any fees paid in the expressly abandoned application; and

(5) The applicant files a petition under 37 CFR 1.102 in the application for which special status is sought that

a) includes a specific identification of the relationship between the applications that qualifies the application for special status;

b) identifies, by application number if available, the application that is being expressly abandoned;

c) provides a statement certifying that applicant has not filed petitions in more than fourteen (14) other applications requesting special status under this program; and

d) provides a statement that applicant agrees to make an election without traverse in a telephonic interview if the Office determines that the claims of the application to be made special are directed to two or more independent and distinct inventions.

The requirement for a fee for consideration of the petition to make special for applications pertaining to Patent Application Backlog Reduction Stimulus Plan has been waived.

The instant petition complies with the conditions required under Patent Application Backlog Reduction Stimulus Plan. Accordingly, the above-identified application has been accorded "special" status.

Telephone inquires concerning this decision should be directed to Brian W. Brown at 571-272-5338.

All other inquires concerning either the examination or status of the application should be directed to the Technology Center.

The application is being forwarded to the Office of Patent Application Processing for further processing commensurate with this decision.

Brian W. Brown
Petitions Examiner
Office of Petitions

UNITED STATES PATENT AND TRADEMARK OFFICE

UNITED STATES DEPARTMENT OF COMMERCE
United States Patent and Trademark Office
Address: COMMISSIONER FOR PATENTS
P.O. Box 1450
Alexandria, Virginia 22313-1450
www.uspto.gov

APPLICATION NO.	FILING DATE	FIRST NAMED INVENTOR	ATTORNEY DOCKET NO.	CONFIRMATION NO.
12/549,645	08/28/2009	Chung Chuan Chen	250159-1021	9409

7590 04/08/2011
THOMAS, KAYDEN, HORSTEMEYER & RISLEY, LLP
600 GALLERIA PARKWAY, S.E.
STE 1500
ATLANTA, GA 30339-5994

EXAMINER
WARD, JOHN A

ART UNIT	PAPER NUMBER
2885	

MAIL DATE	DELIVERY MODE
04/08/2011	PAPER

ACKNOWLEDGEMENT OF REQUEST

Notice of Allowance/Allowability Mailed

The request to print a color drawing reference as the first paragraph in the portion of the specification containing a brief description of the drawings as required by 37 CFR 1.84 and MPEP § 608.02 has been received by the United States Patent and Trademark Office and will be entered into the specification.

571-272-4200 or 1-888-786-0101
Application Assistance Unit
Office of Data Management

FORM PTOM327-5 (Rev. 02/08)

UNITED STATES PATENT AND TRADEMARK OFFICE

Commissioner for Patents
United States Patent and Trademark Office
P.O. Box 1450
Alexandria, VA 22313-1450
www.uspto.gov

April 8, 2011

THOMAS, KAYDEN, HORSTEMEYER & RISLEY, LLP
600 GALLERIA PARKWAY, S.E.
STE 1500
ATLANTA GA 30339-5994

In re Application of	:	
Chung Chuan Chen et al.	:	**DECISION ON PETITION**
Application No. 12549645	:	
Filed: 8/28/2009	:	***ACCEPTANCE OF COLOR***
Attorney Docket No. 250159-1021	:	***DRAWINGS***

This is a decision on the Petition to Accept Color Drawings under 37 C.F.R 1.84 (a) (2), received in the United States Patent and Trademark Office (USPTO) August 28, 2009.

The petition is **GRANTED**.

A grantable petition under 37 C.F.R. 1.84(a) (2) must be accompanied by the following.

1. The fee set forth under 37 C.F.R. 1.17(h),
2. Three (3) sets of the color drawings in question, or (1) set if filed via EFS, and
3. The specification contains appropriate language referring to the color drawings as the first paragraph in that portion of the specification relating to the brief description of the drawings.

The petition was accompanied by all of the required fees and drawings. The specification contains the appropriate language. Therefore, the petition is GRANTED.

Telephone inquires relating to this decision may be directed to the undersigned in the Office of Data Management at 571-272-4200.

/Don Fairchild/
Office of Data Management
Publications Branch

UNITED STATES PATENT AND TRADEMARK OFFICE

Commissioner for Patents
United States Patent and Trademark Office
P.O. Box 1450
Alexandria, VA 22313-1450
www.uspto.gov

ROBERT J. KAPALKA
TYCO TECHNOLOGY RESOURCES
4550 NEW LINDEN HILL ROAD, SUITE 140
WILMINGTON, DE 19808

MAILED

JAN 06 2011

OFFICE OF PETITIONS

In re Application of :
Christopher G. DAILY, et *al.* :
Application No. 12/549,653 :
Filed: August 28, 2009 :
Attorney Docket No. **CS-01067 (958-4040)** :

DECISION GRANTING PETITION
UNDER 37 CFR 1.313(c)(2)

This is a decision on the petition under 37 CFR 1.313(c)(2), filed January 3, 2011, to withdraw the above-identified application from issue after payment of the issue fee.

The petition is **GRANTED**.

The above-identified application is withdrawn from issue for consideration of a submission under 37 CFR 1.114 (request for continued examination). *See* 37 CFR 1.313(c)(2).

Petitioner is advised that the issue fee paid on December 6, 2010 cannot be refunded. If, however, this application is again allowed, petitioner may request that it be applied towards the issue fee required by the new Notice of Allowance.[1]

Telephone inquiries should be directed to the undersigned at (571) 272-7253.

This application is being referred to Technology Center AU 2839 for processing of the request for continued examination under 37 CFR 1.114 and for consideration of the concurrently filed information disclosure statement.

/Monica A. Graves/
Petitions Examiner, Office of Petitions

---

[1] *The request to apply the issue fee to the new Notice may be satisfied by completing and returning the new Part B – Fee(s) Transmittal Form (along with any balance due at the time of submission). Petitioner is advised that the Issue Fee Transmittal Form* ***must*** *be completed and timely submitted to avoid abandonment of the application.*

UNITED STATES PATENT AND TRADEMARK OFFICE

UNITED STATES DEPARTMENT OF COMMERCE
United States Patent and Trademark Office
Address: COMMISSIONER FOR PATENTS
P.O. Box 1450
Alexandria, Virginia 22313-1450
www.uspto.gov

APPLICATION NO.	FILING DATE	FIRST NAMED INVENTOR	ATTORNEY DOCKET NO.	CONFIRMATION NO.
12/549,659	08/28/2009	Takashi SUDO	09546/LH	9436

1933 7590 11/16/2011
HOLTZ, HOLTZ, GOODMAN & CHICK PC
220 Fifth Avenue
16TH Floor
NEW YORK, NY 10001-7708

EXAMINER
HARPER, V PAUL

ART UNIT	PAPER NUMBER
2626	

MAIL DATE	DELIVERY MODE
11/16/2011	PAPER

Please find below and/or attached an Office communication concerning this application or proceeding.

The time period for reply, if any, is set in the attached communication.

UNITED STATES PATENT AND TRADEMARK OFFICE

Commissioner for Patents
United States Patent and Trademark Office
P.O. Box 1450
Alexandria, VA 22313-1450
www.uspto.gov

HOLTZ, HOLTZ, GOODMAN & CHICK PC
220 Fifth Avenue
16TH Floor
NEW YORK NY 10001-7708

In re Application of
SUDO et al.
Application No.: 12/549,659
Filed: 28 August 2009
Attorney Docket No.: 09546/LH
For: SIGNAL BANDWIDTH EXTENSION APPARATUS

: DECISION ON REQUEST TO
: PARTICIPATE IN THE PATENT
: PROSECUTION HIGHWAY
: PROGRAM AND PETITION
: TO MAKE SPECIAL UNDER
: 37 CFR 1.102(a)

This is a decision on the request to participate in the Patent Prosecution Highway (PPH) program and the petition under 37 CFR 1.102(a), filed 07 November 2011, to make the above-identified application special.

The request and petition are **GRANTED**.

Discussion

A grantable request to participate in the PPH pilot program and petition to make special require:

1. The U.S. application is

    a. a Paris Convention application which either
        i. validly claims priority under 35 U.S.C. 119(a) and 37 CFR 1.55 to one or more applications filed in the JPO, or
        ii. validly claims priority to a PCT application that contains no priority claims, or
    b. a national stage application under the PCT (an application which entered the national stage in the U.S. from a PCT international application after compliance with 35 U.S.C. 371), which PCT application
        i. validly claims priority to an application filed in the JPO, or
        ii. validly claims priority to a PCT application that contains no priority claims, or
        iii. contains no priority claim, or
    c. a so-called bypass application filed under 35 U.S.C. 111(a) which validly claims benefit under 35 U.S.C. 120 to a PCT application, which PCT application
        i. validly claims priority to an application filed in the JPO, or
        ii. validly claims priority to a PCT application that contains no priority claims, or

iii. contains no priority claim;

2. Applicant must submit a copy of:
   a. The allowable/patentable claim(s) from the JPO application(s);
   b. An English translation of the allowable/patentable claim(s) and
   c. A statement that the English translation is accurate;
3. Applicant must:
   a. Ensure all the claims in the U.S. application must sufficiently correspond or be amended to sufficiently correspond to the allowable/patentable claim(s) in the JPO application(s) and
   b. Submit a claims correspondence table in English;
4. Examination of the U.S. application has not begun;
5. Applicant must submit:
   a. Documentation of prior office action:
      i. a copy of the office action(s) just prior to the "Decision to Grant a Patent" from each of the JPO application(s) containing the allowable/patentable claim(s) or
      ii. if the allowable/patentable claims(s) are from a "Notification of Reasons for Refusal" then the Notification of Reasons for Refusal or
      iii. if the JPO application is a first action allowance then no office action from the JPO is necessary should be indicated on the request/petition form;
   b. An English language translation of the JPO Office action from (5)(a)(i)-(ii) above
   c. A statement that the English translation is accurate;
6. Applicant must submit:
   a. An IDS listing the documents cited by the JPO examiner in the JPO office action (unless already submitted in this application)
   b. Copies of the documents except U.S. patents or U.S. patent application publications (unless already submitted in this application);

The request to participate in the PPH pilot program and petition comply with the above requirements. Accordingly, the above-identified application has been accorded "special" status.

Inquiries concerning this decision should be directed to Lee W. Young at 571-272-4549.

All other inquiries concerning the examination or status of the application is accessible in the PAIR system at http://www.uspto.gov/ebc.index.html.

This application will be forwarded to the examiner for action on the merits commensurate with this decision once this application's formality reviews have been completed.

Lee W. Young
Quality Assurance Specialist
Technology Center 2600

UNITED STATES PATENT AND TRADEMARK OFFICE

UNITED STATES DEPARTMENT OF COMMERCE
United States Patent and Trademark Office
Address: COMMISSIONER FOR PATENTS
P.O. Box 1450
Alexandria, Virginia 22313-1450
www.uspto.gov

APPLICATION NO.	FILING DATE	FIRST NAMED INVENTOR	ATTORNEY DOCKET NO.	CONFIRMATION NO.
12/549,688	08/28/2009	Xiaodong Mao	SCDY 24.033 (100809-00503	9491

530 7590 11/19/2010
LERNER, DAVID, LITTENBERG,
KRUMHOLZ & MENTLIK
600 SOUTH AVENUE WEST
WESTFIELD, NJ 07090

EXAMINER

ART UNIT	PAPER NUMBER
2618	

MAIL DATE	DELIVERY MODE
11/19/2010	PAPER

Please find below and/or attached an Office communication concerning this application or proceeding.

The time period for reply, if any, is set in the attached communication.

UNITED STATES PATENT AND TRADEMARK OFFICE

Commissioner for Patents
United States Patent and Trademark Office
P.O. Box 1450
Alexandria, VA 22313-1450
www.uspto.gov

LERNER, DAVID, LITTENBERG,
KRUMHOLZ & MENTLIK
600 SOUTH AVENUE WEST
WESTFIELD NJ 07090

In re Application of	:	
MAO, XIAODONG	:	DECISION ON REQUEST TO
Application No. 12/549,688	:	PARTICIPATE IN PATENT
Filed: August 28, 2009	:	PROSECUTION HIGHWAY PILOT
Attorney Docket No.	:	PROGRAM AND PETITION
SCDY 24.033 (100809-00503	:	TO MAKE SPECIAL UNDER
	:	37 CFR 1.102(d)

This is a decision on the request to participate in the Patent Prosecution Highway (PPH) pilot program and the petition under 37 CFR 1.102(d), filed September 27, 2010, to make the above-identified application special.

The request and petition are **GRANTED**.

A grantable request to participate in the PPH pilot program and petition to make special require:

(1) The U.S. application must validly claim priority under 35 U.S.C. 119(a) to one or more applications filed in the CIPO;
(2) Applicant must submit a copy of the allowable/patentable claim(s) from the CIPO application(s);
(3) All the claims in the U.S. application must sufficiently correspond or be amended to sufficiently correspond to the allowable/patentable claim(s) in the CIPO application(s);
(4) Examination of the U.S. application has not begun;
(5) Applicant must submit a copy of all the office actions from each of the CIPO application(s) containing the allowable/patentable claim(s); and
(6) Applicant must submit an IDS listing the documents cited by the CIPO examiner in the CIPO office action along with copies of documents except U.S. patents or U.S. patent application publications.

The request to participate in the PPH pilot program and petition now comply with the above requirements. Accordingly, the above-identified application has been accorded "special" status.

Telephone inquiries concerning this decision should be directed to Doris To at 571-272-7629.

All other inquiries concerning the examination or status of the application should be directed to Patent Application Information Retrieval (PAIR) system.

/Doris To/

Doris To
Quality Assurance Specialist
Technology Center 2600
Communications

UNITED STATES PATENT AND TRADEMARK OFFICE

Commissioner for Patents
United States Patent and Trademark Office
P.O. Box 1450
Alexandria, VA 22313-1450
www.uspto.gov

March 11, 2011

THOMAS, KAYDEN, HORSTEMEYER & RISLEY, LLP
600 GALLERIA PARKWAY, S.E.
STE 1500
ATLANTA GA 30339-5994

In re Application of	:	
Chen, Chung Chuan et al	:	**DECISION ON PETITION**
Application No. 12/549,692	:	
Filed: 08/28/2009	:	***ACCEPTANCE OF COLOR***
Attorney Docket No. 250159-1022	:	***DRAWINGS***

This is a decision on the Petition to Accept Color Drawings under 37 C.F.R 1.84 (a) (2), received in the United States Patent and Trademark Office (USPTO) August 28, 2009.

The petition is **GRANTED**.

A grantable petition under 37 C.F.R. 1.84(a) (2) must be accompanied by the following.

1. The fee set forth under 37 C.F.R. 1.17(h),
2. Three (3) sets of the color drawings in question, or (1) set if filed via EFS, and
3. The specification contains appropriate language referring to the color drawings as the first paragraph in that portion of the specification relating to the brief description of the drawings.

The petition was accompanied by all of the required fees and drawings. The specification contains the appropriate language. Therefore, the petition is GRANTED.

Telephone inquires relating to this decision may be directed to the undersigned in the Office of Data Management at 571-272-4200.

/Diane Terry/
Quality Control Specialist
Office of Data Management
Publications Branch

UNITED STATES PATENT AND TRADEMARK OFFICE

Commissioner for Patents
United States Patent and Trademark Office
P.O. Box 1450
Alexandria, VA 22313-1450
www.uspto.gov

DAVID S ALAVI
2852 WILLAMETTE ST
#402
EUGENE OR 97405-8200

MAILED
DEC 29 2010
OFFICE OF PETITIONS

In re Application of	:	
Michael D. Slinkard, et al.	:	
Application No. 12/549,698	:	DECISION ON PETITION
Filed: August 28, 2009	:	UNDER 37 CFR 1.137(b)
Attorney Docket No. SLIN10NP	:	

This is a decision on the petition, filed November 21, 2010, which is being treated as a petition under 37 CFR 1.137(b) to revive the instant nonprovisional application for failure to timely notify the U.S. Patent and Trademark (USPTO) of the filing of an application in a foreign country, or under a multinational treaty that requires publication of applications eighteen months after filing. *See* 37 CFR 1.137(f).

The petition is **GRANTED**.

Petitioner states that the instant nonprovisional application is the subject of an application filed in an eighteen-month publication country on April 22, 2010. However, the USPTO was unintentionally not notified of this filing within 45 days subsequent to the filing of the subject application in an eighteen-month publication country.

In view of the above, this application became abandoned pursuant to 35 U.S.C. § 122(b)(2)(B)(iii) and 37 CFR 1.213(c) for failure to timely notify the Office of the filing of an application in a foreign country or under a multilateral international agreement that requires publication of applications 18 months after filing.

A petition to revive an application abandoned pursuant to 35 U.S.C. 122(b)(2)(B)(iii) for failure to notify the USPTO of a foreign filing must be accompanied by:

(1) the required reply which is met by the notification of such filing in a foreign country or under a multinational treaty;
(2) the petition fee as set forth in 37 CFR 1.17(m); and
(3) a statement that the entire delay in filing the required reply from the due date of the reply until the filing of a grantable petition was unintentional.

37 CFR 1.137(b)(3) requires a statement that "the entire delay in filing the required reply from the due date for the reply until the filing of a grantable petition pursuant to 37 CFR 1.137(b) was unintentional." Since the statement appearing in the petition varies from the language required by 37 CFR 1.137(b)(3), the statement is being construed as the required statement. Petitioner must notify the Office if this is not a correct reading of the statement appearing in the petition.

The instant petition has been found to be in compliance with 37 CFR 1.137(b). Accordingly, the failure to timely notify the USPTO of a foreign or international filing within 45 days after the date of filing of such foreign or international application as provided by 35 U.S.C. § 122(b)(2)(B)(iii) and 37 CFR 1.213(c) is accepted as having been unintentionally delayed.

The previous Request and Certification under 35 U.S.C. § 122(b)(2)(B)(i) has been rescinded. A Notice Regarding Rescission of Nonpublication Request which sets forth the projected publication date of March 31, 2011 accompanies this decision on petition.

Telephone inquiries concerning this decision should be directed to Terri Johnson at (571) 272-2991.

This application is being referred to Technology Center Art Unit 2881 for examination in due course.

/Terri Johnson/
Terri Johnson
Petitions Examiner
Office of Petitions

ATTACHMENT: Notice Regarding Rescission of Nonpublication Request

UNITED STATES PATENT AND TRADEMARK OFFICE

UNITED STATES DEPARTMENT OF COMMERCE
United States Patent and Trademark Office
Address: COMMISSIONER FOR PATENTS
P.O. Box 1450
Alexandria, Virginia 22313-1450
www.uspto.gov

APPLICATION NUMBER	FILING OR 371(C) DATE	FIRST NAMED APPLICANT	ATTY. DOCKET NO./TITLE
12/549,698	08/28/2009	Michael D. Slinkard	SLIN10NP

CONFIRMATION NO. 9517

23892
DAVID S ALAVI
2852 WILLAMETTE ST
#402
EUGENE, OR 97405-8200

NONPUBLICATION RESCISSION LETTER

OC000000045129213

Date Mailed: 12/27/2010

Communication Regarding Rescission Of Nonpublication Request and/or Notice of Foreign Filing

Applicant's rescission of the previously-filed nonpublication request and/or notice of foreign filing is acknowledged. The paper has been reflected in the Patent and Trademark Office's (USPTO's) computer records so that the earliest possible projected publication date can be assigned.

The projected publication date is 03/31/2011.

If applicant rescinded the nonpublication request before or on the date of "foreign filing,"[1] then no notice of foreign filing is required.

If applicant foreign filed the application after filing the above application and before filing the rescission, and the rescission did not also include a notice of foreign filing, then a notice of foreign filing (not merely a rescission) is required to be filed within 45 days of the date of foreign filing. See 35 U.S.C. § 122(b)(2)(B)(iii), and Clarification of the United States Patent and Trademark Office's Interpretation of the Provisions of 35 U.S.C. § 122(b)(2)(B)(ii)-(iv), 1272 Off. Gaz. Pat. Office 22 (July 1, 2003).

If a notice of foreign filing is required and is not filed within 45 days of the date of foreign filing, then the application becomes abandoned pursuant to 35 U.S.C. § 122(b)(2)(B)(iii). In this situation, applicant should either file a petition to revive or notify the Office that the application is abandoned. See 37 CFR 1.137(f). Any such petition to revive will be forwarded to the Office of Petitions for a decision. Note that the filing of the petition will not operate to stay any period of reply that may be running against the application.

Questions regarding petitions to revive should be directed to the Office of Petitions at (571) 272-3282.

[1] Note, for purpose of this notice, that "foreign filing" means "filing an application directed to the same invention in another country, or under a multilateral international agreement, that requires publication of applications 18 months after filing".

/tsjohnson/

Office of Data Management, Application Assistance Unit (571) 272-4000, or (571) 272-4200, or 1-888-786-0101

UNITED STATES PATENT AND TRADEMARK OFFICE

Commissioner for Patents
United States Patent and Trademark Office
P.O. Box 1450
Alexandria, VA 22313-1450
www.uspto.gov

ANTONELLI, TERRY, STOUT & KRAUS, LLP
1300 NORTH SEVENTEENTH STREET
SUITE 1800
ARLINGTON VA 22209-3873

MAILED
OCT 26 2010
OFFICE OF PETITIONS

In re Application of:	:	
Nitta et al.	:	
Application No. 12/549706	:	DECISION ON
Filing or 371(c) Date: 08/28/2009	:	PETITION UNDER
Title of Invention:	:	37 CFR 1.183
LIQUID CRYSTAL DRIVER AND	:	
LIQUID CRYSTAL DISPLAY DEVICE	:	
USING THE SAME	:	

This is a decision on the "Renewed Petition Under 37 C.F.R. § 1.183," filed September 3, 2010, and supplemented October 25, 2010, to waive the requirement under 37 CFR 1.67 that all of the inventors sign a supplemental declaration.

The petition under 37 CFR 1.183 is **GRANTED**.

Background

Applicant filed the present reissue application and an Oath/Declaration on August 28, 2009. The oath/declaration did not include the signature of inventor Makiko Ikeda.

Applicant filed a petition and Statement of Facts, along with a Reissue Oath/Declaration, to allow the other inventor(s) to proceed with the application on behalf of himself or herself and the nonsigning inventor(s) on March 8, 2010. In support of the petition, Applicant stated that inventor Makiko Ikeda changed her name by marriage to Makiko Miyamoto on August 24, 2002. Applicant provided further that Applicant obtained the last known address and telephone number of inventor Miyamoto from Management, and from a colleague of the department to which Ms. Miyamoto belonged, and called the telephone number on June 2007; however, the telephone number was in use no longer. Applicant averred that they sent the Supplemental declaration for the present reissue application to inventor Miyamoto's last known address by registered mail on October 8, 2009. The mail was returned by the Post Office with the Notice that the mail could not be delivered because a new address of Ms. Miyamoto was not known. Applicant provided that the supplemental declaration was not delivered to inventor Miyamoto, and averred that the

foregoing showed that diligent efforts were made to find inventor Miyamoto, but were unsuccessful.

The petition was dismissed in a Decision mailed June 4, 2010. The Decision informed petitioner that at the very least, diligent effort required an Internet search, or a search of telephone directories of the regions where it is suspected the non-signing inventors may reside, and a grantable petition must include a statement from a person with firsthand knowledge of the search, before a refusal to join in the application may be alleged.

The present renewed petition

Applicant files the present renewed petition and includes a statement of facts from Takahito Karasawa, wherein Mr. Karasawa provides, *inter alia*, that under his supervision a search of the Japan telephone directory database known as "Townpage" was conducted, but said telephone directory databases in Japan are available generally for obtaining an address of an organization and not an individual, and that petitioner was unsuccessful in revealing a telephone number for inventor Miyamoto. Applicant provides further that The Registration Family Law Of Japan makes a family registry unavailable to locate inventor Miyamoto.

Applicable Law

37 CFR 1.67 states, in pertinent part:

> (a) The Office may require, or inventors and applicants may submit, a supplemental oath or declaration meeting the requirements of §1.63 or § 1.162 to correct any deficiencies or inaccuracies present in the earlier filed oath or declaration.
>
> > (1) Deficiencies or inaccuracies relating to all the inventors or applicants (§§ 1.42, 1.43, or § 1.47) may be corrected with a supplemental oath or declaration signed by all the inventors or applicants.

Suspension of the rules under 37 CFR 1.183 may be granted in an "extraordinary situation, when justice requires."

With the present petition, Applicant has diligent effort to find or locate joint inventor Miyamoto to obtain her signature on the supplemental declaration. Accordingly, it is concluded that petitioner has demonstrated that this is an extraordinary situation requiring waiver of the rules.

The reissue declaration, filed on October 25, 2010, will be entered, despite the fact that the requirement set forth in 37 CFR 1.67(a)(1) that all the inventors sign a supplemental oath or declaration has not been satisfied.

The application file is being referred to Technology Center Art Unit 2629 for further processing in the normal course of business.

Telephone inquiries concerning this matter should be directed to the undersigned at (571) 272-3232.

/DLW/

Derek L. Woods
Attorney
Office of Petitions

UNITED STATES PATENT AND TRADEMARK OFFICE

Commissioner for Patents
United States Patent and Trademark Office
P.O. Box 1450
Alexandria, VA 22313-1450
www.uspto.gov

PIETRAGALLO GORDON ALFANO BOSICK & RASPANTI LLP
ONE OXFORD CENTRE, 38TH FLOOR
301 GRANT STREET
PITTSBURGH, PA 15219-6404

MAILED

AUG 10 2010

OFFICE OF PETITIONS

In re Application of	:	
John Tinker et al	:	DECISION GRANTING STATUS
Application No. 12/549,710	:	UNDER 37 CFR 1.47(a)
Filed: August 28, 2009	:	
Attorney Docket No. CLVIP-86752	:	

This is a decision on the petition filed December 16, 2009 under 37 CFR 1.47(a).

The petition is **GRANTED.**

Petitioner has shown that the non-signing inventor Steven Wright has refused to join in the filing of the above-identified application.

The application and papers have been reviewed and found in compliance with 37 CFR 1.47(a). This application is hereby accorded Rule 1.47(a) status.

As provided in 37 CFR 1.47(c), this Office will forward notice of this application's filing to the non-signing inventor at the address given in the petition. Notice of the filing of this application will also be published in the Official Gazette.

This matter is being referred to the Office of Patent Application Processing.

Telephone inquiries regarding this decision should be directed to Irvin Dingle at (571) 272-3210.

David Bucci
Petitions Examiner
Office of Petitions

UNITED STATES PATENT AND TRADEMARK OFFICE

Commissioner for Patents
United States Patent and Trademark Office
P.O. Box 1450
Alexandria, VA 22313-1450
www.uspto.gov

MAILED

AUG 10 2010

OFFICE OF PETITIONS

Steven Wright
206 Laurel Court
Morgantown, PA 19543

In re Application of
John Tinker; Steven Wright
Application No. 12/549,710
Filed: August 28, 2009
For: HAMMER TEST BENCH

Dear Mr. Wright:

You are named as a joint inventor in the above-identified United States patent application, filed under the provisions of 35 U.S.C. 116 (United States Code), and 37 CFR 1.47(a), Rules of Practice in Patent Cases. Should a patent be granted on the application you will be designated therein as a joint inventor.

As a named inventor you are entitled to inspect any paper in the file wrapper of the application, order copies of all or any part thereof (at a prepaid cost per 37 CFR 1.19) or make your position of record in the application. Alternatively, you may arrange to do any of the preceding through a registered patent attorney or agent presenting written authorization from you. If you care to join the application, counsel of record (see below) would presumably assist you. Joining the application would entail the filing of an appropriate oath or declaration by you pursuant to 37 CFR 1.63.

Telephone inquiries regarding this communication should be directed to Irvin Dingle at (571) 272-3210. Requests for information regarding your application should be directed to the File Information Unit at (703) 308-2733. Information regarding how to pay for and order a copy of the application, or a specific paper in the application, should be directed to the Certification Division at (703) 308-9726 or 1 (800) 972-6382 (outside the Washington, DC area).

David Bucci
Petition Examiner
Office of Petitions

cc: Pietragallo, Gordon, Alfano, Bosick & Raspanti LLP
One Oxford Centre, 38th Floor
301 Grant Street
Pittsburgh, PA 15219-6404

UNITED STATES PATENT AND TRADEMARK OFFICE

Commissioner for Patents
United States Patent and Trademark Office
P.O. Box 1450
Alexandria, VA 22313-1450
www.uspto.gov
DIW Nov-10

LOUIS MICHON
175 LAURIER STREET
302
GATINEAU QC J8X 4G3
CANADA

MAILED
NOV 30 2010
OFFICE OF PETITIONS

In re Application of :
Louis Michon :
Application Number: 12/549808 : ON PETITION
Filing Date: 08/28/2009 :
Attorney Docket Number: :
OTT_LAW-22364541 :

This is a decision in response to the petition under 37 CFR 1.137(b) filed on September 2, 2010, to revive the above-identified application.

The petition is **GRANTED**.

This application became abandoned on December 16, 2009, for failure to timely submit a reply to the Notice to File Missing Parts of Nonprovisional Application mailed on September 15, 2009, which set a two (2) month shortened period for reply. On December 24, 2009, an untimely reply was filed. On July 8, 2010, Notice of Abandonment was mailed.

Receipt of the declaration pursuant to 37 CFR 1.63 and fee payment, both filed on December 24, 2009, is acknowledged. Receipt of the Application Data Sheet filed with the subject petition is also acknowledged.

The application is referred to the Office of Patent Application Processing for further processing.

Telephone inquiries concerning this matter may be directed to the undersigned at (571) 272-3231.

D Wood

Douglas I. Wood
Senior Petitions Attorney
Office of Petitions

UNITED STATES PATENT AND TRADEMARK OFFICE

Commissioner for Patents
United States Patent and Trademark Office
P.O. Box 1450
Alexandria, VA 22313-1450
www.uspto.gov

Decision Date : May 23,2011

In re Application of :

Kevin Furnary

Application No : 12549816

Filed : 28-Aug-2009

Attorney Docket No : 051932-0382104

DECISION ON REQUEST TO WITHDRAW AS ATTORNEY/AGENTOF RECORD

This is an electronic decision on the Request to Withdraw as attorney or agent of record under 37 CFR § 1.36(b), filed May 23,2011

The request is **APPROVED.**

The request was signed by Emily T. Bell (registration no. 47418) on behalf of all attorneys/agents associated with Customer Number 00909 . All attorneys/agents associated with Cusotmer Number 00909 have been withdrawn.

Since there are no remaining attorneys of record, all future communications from the Office will be directed to the first named inventor or assignee that has properly made itself of record pursuant to 37 CFR 3.71, with correspondence address:

Name	Kevin P. Furnary
Name2	
Address 1	9750 Vale Road
Address 2	
City	Vienna
State	VA
Postal Code	22181
Country	US

As a reminder, requester is required to inform the first named inventor or assignee that has properly made itself of record pursuant to 37 CFR 3.71 of the electronically processed petition.

Telephone inquiries concerning this decision should be directed to the Patent Electronic Business Center (EBC) at 866-217-9197.

Office of Petitions

Doc Code: PET.AUTO **Document Description: Petition automatically granted by EFS-Web**	PTO/SB/83 U.S. Patent and Trademark Office Department of Commerce

Electronic Petition Request	**REQUEST FOR WITHDRAWAL AS ATTORNEY OR AGENT AND CHANGE OF CORRESPONDENCE ADDRESS**
Application Number	12549816
Filing Date	28-Aug-2009
First Named Inventor	Kevin Furnary
Art Unit	1765
Examiner Name	FRANCES TISCHLER
Attorney Docket Number	051932-0382104
Title	METHOD FOR CAPTURING AND SEQUESTERING CARBON CONTAINED IN PLASTICS

◉ Please withdraw me as attorney or agent for the above identified patent application and the practitioners of record associated with Customer Number: 00909

The reason(s) for this request are those described in 37 CFR:

10.40(c)(1)(vi)

Certifications

☒ I/We have given reasonable notice to the client, prior to the expiration of the response period, that the practitioner(s) intend to withdraw from employment

☒ I/We have delivered to the client or a duly authorized representative of the client all papers and property (including funds) to which the client is entitled

☒ I/We have notified the client of any responses that may be due and the time frame within which the client must respond

Change the correspondence address and direct all future correspondence to the first named inventor or assignee that has properly made itself of record pursuant to 37 CFR 3.71:

Name	Kevin P. Furnary
Address	9750 Vale Road
City	Vienna
State	VA
Postal Code	22181
Country	US

I am authorized to sign on behalf of myself and all withdrawing practitioners.	
Signature	/Emily T. Bell/
Name	Emily T. Bell
Registration Number	47418

UNITED STATES PATENT AND TRADEMARK OFFICE

Commissioner for Patents
United States Patent and Trademark Office
P.O. Box 1450
Alexandria, VA 22313-1450
www.uspto.gov
DIW Aug-10

TEXAS INSTRUMENTS INCORPORATED
P O BOX 655474, M/S 3999
DALLAS TX 75265

MAILED

AUG 0 6 2010

OFFICE OF PETITIONS

In re Application of Xiong, Wu, and Wang Application Number: 12/549862 Filing Date: 08/28/2009 Attorney Docket Number: TI-66902	DECISION REFUSING STATUS UNDER 37 CFR 1.47(a) AND NOTICE OF ABANDONMENT

This is in response to the petition under 37 CFR 1.47(a) filed on May 7, 2010.

The petition is **DISMISSED**.

The application is **ABANDONED**.

Any request for reconsideration of this decision must be submitted within TWO (2) MONTHS from the mail date of this decision. Extensions of time under 37 CFR 1.136(a) are permitted. Any request for reconsideration must include a petition to revive the above-identified application under 37 CFR 1.137(a) or (b), or under 37 CFR 1.181, a renewed petition under 37 CFR 1.47(a), and the requisite petition fees under 37 CFR 1.17.

The above-identified application was filed on August 28, 2009, without an executed oath or declaration. Accordingly, on September 18, 2009, the Office of Patent Application Processing mailed a Notice to File Missing Parts of Nonprovisional Application requiring replacement drawings in compliance with 37 CFR 1.84 and 1.121(d), an executed oath or declaration, and a surcharge for its late filing.

In response, on November 18, 2009, a reply was filed, including a declaration naming Weize Xiong, Zhiquang Wu, and Xin Wang as the inventive entity, signed by inventor Xiong only.

On November 27, 2009, a Notice of Incomplete Reply (Nonprovisional) was mailed, stating that the signatures of Zhiqiang Wu and Xin Wang were missing from the declaration, and that replacement drawings were required. The Notice of Incomplete Reply stated that the period for reply set in the Notice to File Missing Parts (Notice) mailed on September 18, 2009, remains in effect.

On December 15, 2009, a reply, including drawings, was filed.

On December 24, 2009, a Notice of Incomplete Reply (Nonprovisional) was mailed, stating that the signatures of Zhiqiang Wu and Xin Wang were missing from the declaration. The Notice of Incomplete Reply stated that the period for reply set in the Notice mailed on September 18, 2009, remains in effect.

On May 7, 2009, the subject petition was filed, where by petitioners assert that joint inventors Zhiqiang Wu and Xin Wang have refused to sign the declaration.

NOTICE OF ABANDONMENT

37 CFR 1.135(b) states that prosecution of an application to save it from abandonment must include such complete and proper reply as the condition of the application may require.

The application became abandoned on November 19, 2009, for failure to timely file a proper reply to the Notice to File Missing Parts of Nonprovisional Application mailed on September 18, 2009, which set a two (2)-month shortened period for reply. The reply filed on November 18, 2009, was missing the properly executed oath or declaration and replacement drawings.

Further, in addition to lacking a properly executed declaration, the reply filed on December 15, 2009 did not include payment or authorization for payment of the required one (1)-month extension of time.

The subject petition, filed on May 7, 2010, was filed more than five (5) months after the end of the extendable period for reply to the Notice mailed on September 18, 2009. As such, the extendable period has expired, and no extension of time can be obtained. Therefore, as a timely and proper reply was not filed, the application is abandoned.

Accordingly, under the circumstances of this application, a petition to revive under 37 CFR 1.137(a) or (b), accompanied by

the required petition fee, must accompany any renewed petition under 37 CFR 1.47(a), which may include an oath or declaration executed by the non-signing inventor(s). Alternatively, petitioners may file a petition to withdraw the holding of abandonment under 37 CFR 1.181, along with a renewed petition under 37 CFR 1.47(a), if the abandonment is believed to be in error.

It is further noted that a grantable petition under 37 CFR 1.47(a) requires:

(1) proof that the non-signing inventor cannot be reached or located, notwithstanding diligent effort, or refuses to sign the oath or declaration after having been presented with the application papers (specification, claims and drawings);
(2) an acceptable oath or declaration in compliance with 35 U.S.C. §§ 115 and 116;
(3) the petition fee;
(4) a surcharge of $130 or $65 (small entity) if the petition and/or declaration is not filed at the time of filing the application, and
(5) a statement of the last known address of the non-signing inventors.

In regards to item (1), given that the subject petition was filed only two (2) weeks after the application and declaration was sent to each of the non-signing inventors, petitioners should state whether any response was received from either of the non-signing inventors after the filing of the initial petition under 37 CFR 1.47(a).

Further correspondence with respect to this matter should be addressed as follows:

By mail: Mail Stop Petition
Commissioner for Patents
P.O. Box 1450
Alexandria, VA 22313-1450

By FAX: (571) 273-8300
Attn: Office of Petitions

By hand: Customer Service Window
Mail Stop Petition
Randolph Building
401 Dulany Street
Alexandria, VA 22314

A reply may also be filed via the EFS-Web system of the USPTO.

Telephone inquiries related to this decision should be directed to the undersigned at 571-272-3231.

D Wood

Douglas I. Wood
Senior Petitions Attorney
Office of Petitions

UNITED STATES PATENT AND TRADEMARK OFFICE

Commissioner for Patents
United States Patent and Trademark Office
P.O. Box 1450
Alexandria, VA 22313-1450
www.uspto.gov
DIW Nov-10

TEXAS INSTRUMENTS INCORPORATED
P O BOX 655474, M/S 3999
DALLAS TX 75265

MAILED
DEC 01 2010
OFFICE OF PETITIONS

In re Application of Xiong, Wu, and Wang Application Number: 12/549862 Filing Date: 08/28/2009 Attorney Docket Number: TI-66902	DECISION ON PETITION AND DECISION ACCORDING STATUS UNDER 37 CFR 1.47(a)

This is in response to the petition filed on September 23, 2010, which is treated as a petition under 37 CFR 1.137(b) and a renewed petition under 37 CFR 1.47(a).

The petitions are **GRANTED**.

The application became abandoned on November 19, 2009, for failure to timely file a proper reply to the Notice to File Missing Parts of Nonprovisional Application mailed on September 18, 2009, which set a two (2)-month shortened period for reply. The reply filed on November 18, 2009, was missing the properly executed oath or declaration and replacement drawings. Accordingly, on November 27, 2009, a Notice of Incomplete Reply (Nonprovisional) was mailed, stating that the signatures of inventors Zhiqiang Wu and Xin Wang were missing from the declaration, and that replacement drawings were required. No new time period for reply was set. On May 7, 2010, a reply, including the petition under 37 CFR 1.47(a) was filed more than five (5) months after the end of the extendable period for reply to the Notice mailed on September 18, 2009. On August 6, 2010, the petition under 37 CFR 1.47(a) was dismissed, and the application was held abandoned.

On September 23, 2010, the subject renewed petitions were filed.

Petitioners have shown that a copy of the application was sent to the last known addresses of the non-signing inventors, Zhiqiang

Wu and Xin Wang. Neither inventor has signed and return the declaration, however.

As such, the showing of record is that the non-signing inventor has constructively refused to join in the filing of the application.

The above-identified application and papers have been reviewed and found in compliance with 37 CFR 1.47(a). This application is hereby accorded Rule 1.47(a) status.

As provided in Rule 1.47(c), this Office will forward notice of this application's filing to the non-signing inventor at the address referenced above and listed in the petition, not the Declaration. Notice of the filing of this application will also be published in the *Official Gazette*.

The petition fee has been received. No further fees are due.

The petition fee under § 1.17(g) of $200.00 and the surcharge under § 1.20(h) of $130.00 filed on September 23, 2010, were previously filed on May 7, 2010 and November 18, 2009, respectively. The duplicate fees are unnecessary and will be credited to counsel's deposit account.

The application is being referred to the Office of Patent Application Processing for further processing.

Telephone inquiries related to this decision should be directed to the undersigned at 571-272-3231.

D Wood

Douglas I. Wood
Senior Petitions Attorney
Office of Petitions

UNITED STATES PATENT AND TRADEMARK OFFICE

Commissioner for Patents
United States Patent and Trademark Office
P.O. Box 1450
Alexandria, VA 22313-1450
www.uspto.gov
DIW Nov-10

Zhiqiang Wu
1511 Juliet Drive
Allen TX 75013

MAILED

DEC 01 2010

OFFICE OF PETITIONS

In re Application of
Xiong et al.
Application No. 12/553,510
Filed: August 28, 2008
For: DISPOSABLE SPACE INTEGRATION WITH STRESS MEMORIZATION TECHNIQUE AND SILICON-GERMANIUM

Dear Mr. Wu:

You are named as a joint inventor in the above identified United States patent application, filed under the provisions of 35 U.S.C. 116 (United States Code), and 37 CFR 1.47(a), Rules of Practice in Patent Cases. Should a patent be granted on the application you will be designated therein as a joint inventor.

As a named inventor you are entitled to inspect any paper in the file wrapper of the application, order copies of all or any part thereof (at a prepaid cost per 37 CFR 1.19) or make your position of record in the application. Alternatively, you may arrange to do any of the preceding through a registered patent attorney or agent presenting written authorization from you. If you care to join the application, counsel of record (see below) would presumably assist you. Joining in the application would entail the filing of an appropriate oath or declaration by you pursuant to 37 CFR 1.63.

Telephone inquiries regarding this communication should be directed to the undersigned at 571/272-3231. Requests for information regarding your application should be directed to the File Information Unit at 571-272-3150. Information regarding how to pay for and order a copy of the application, or a specific paper in the application, should be directed to Certification Division at 571-272-3150 or 1-800-972-6382 (outside the Washington D.C. area).

D Wood

Douglas I. Wood
Senior Petitions Attorney
Office of Petitions

TEXAS INSTRUMENTS INCORPORATED
PO BOX 655474, M/S 3999
DALLAS TX 75265

UNITED STATES PATENT AND TRADEMARK OFFICE

Commissioner for Patents
United States Patent and Trademark Office
P.O. Box 1450
Alexandria, VA 22313-1450
www.uspto.gov
DIW Nov-10

MAILED
DEC 01 2010
OFFICE OF PETITIONS

Xin Wang
3013 Isle Royale Drive
Plano TX 75025

In re Application of
Xiong et al.
Application No. 12/553,510
Filed: August 28, 2008
For: DISPOSABLE SPACE INTEGRATION WITH STRESS MEMORIZATION TECHNIQUE AND SILICON-GERMANIUM

Dear Mr. Wang:

You are named as a joint inventor in the above identified United States patent application, filed under the provisions of 35 U.S.C. 116 (United States Code), and 37 CFR 1.47(a), Rules of Practice in Patent Cases. Should a patent be granted on the application you will be designated therein as a joint inventor.

As a named inventor you are entitled to inspect any paper in the file wrapper of the application, order copies of all or any part thereof (at a prepaid cost per 37 CFR 1.19) or make your position of record in the application. Alternatively, you may arrange to do any of the preceding through a registered patent attorney or agent presenting written authorization from you. If you care to join the application, counsel of record (see below) would presumably assist you. Joining in the application would entail the filing of an appropriate oath or declaration by you pursuant to 37 CFR 1.63.

Telephone inquiries regarding this communication should be directed to the undersigned at 571/272-3231. Requests for information regarding your application should be directed to the File Information Unit at 571-272-3150. Information regarding how to pay for and order a copy of the application, or a specific paper in the application, should be directed to Certification Division at 571-272-3150 or 1-800-972-6382 (outside the Washington D.C. area).

D Wood
Douglas I. Wood
Senior Petitions Attorney
Office of Petitions

TEXAS INSTRUMENTS INCORPORATED
PO BOX 655474, M/S 3999
DALLAS TX 75265

UNITED STATES PATENT AND TRADEMARK OFFICE

Commissioner for Patents
United States Patent and Trademark Office
P.O. Box 1450
Alexandria, VA 22313-1450
www.uspto.gov

MAILED

MAR 14 2011

OFFICE OF PETITIONS

FARIBA SIRJANI
925 DELWARE AVENUE, APT. 9C
BUFFALO, NY 14209

In re Application of	:	
Roger Lionel David Sparrow	:	
Application No. 12/549,880	:	DECISION ON PETITION
Filed: August 28, 2009	:	TO WITHDRAW
Attorney Docket No. 2969/us	:	FROM RECORD
	:	

This is a decision on the Request to Withdraw as attorney or agent of record under 37 C.F.R. § 1.36(b), filed February 2, 2011.

The request is **APPROVED**.

A grantable request to withdraw as attorney/agent of record must be signed by every attorney/agent seeking to withdraw or contain a clear indication that one attorney is signing on behalf of another/others. A request to withdraw will not be approved unless at least 30 (thirty) days would remain between the date of approval and the later of the expiration date of a time to file a response or the expiration date of the maximum time period which can be extended under 37 C.F.R. § 1.136(a).

The request was signed by Fariba Sirjani. Fariba Sirjani have been withdrawn as attorney or agent of record; all other attorneys remain of record.

The correspondence address of record remains unchanged.

Telephone inquiries concerning this decision should be directed to Terri Johnson at 571-272-2991.

/Terri Johnson/
Terri Johnson
Petitions Examiner
Office of Petitions

cc: **MEREDITH & KEYHANI, PLLC**
330 MADISON AVE.
6TH FLOOR
NEW YORK NY 10017

UNITED STATES PATENT AND TRADEMARK OFFICE

Commissioner for Patents
United States Patent and Trademark Office
P.O. Box 1450
Alexandria, VA 22313-1450
www.uspto.gov

Decision Date : December 14, 2011

In re Application of :

Dennis Schultze

Application No : 12549883

Filed : 28-Aug-2009

Attorney Docket No : 1423-150

DECISION ON REQUEST TO WITHDRAW AS ATTORNEY/AGENTOF RECORD

This is an electronic decision on the Request to Withdraw as attorney or agent of record under 37 CFR§ 1.36(b), filed December 14, 2011

The request is **APPROVED**

The request was signed by Robert J. Jondle (registration no. 33915) on behalf of all attorneys/agents associated with Customer Number 32905 . All attorneys/agents associated with Customer Number 32905 have been withdrawn.

Since there are no remaining attorneys of record, all future communications from the Office will be directed to the first named inventor or assignee that has properly made itself of record pursuant to 37 CFR 3.71, with Customer number 26263 .

As a reminder, requester is required to inform the first named inventor or assignee that has properly made itself of record pursuant to 37 CFR 3.71 of the electronically processed petition.

Telephone inquiries concerning this decision should be directed to the Patent Electronic Business Center (EBC) at 866-217-9197.

Office of Petitions

Doc Code: PET.AUTO **Document Description: Petition automatically granted by EFS-Web**	PTO/SB/83 U.S. Patent and Trademark Office Department of Commerce

Electronic Petition Request	**REQUEST FOR WITHDRAWAL AS ATTORNEY OR AGENT AND CHANGE OF CORRESPONDENCE ADDRESS**
Application Number	12549883
Filing Date	28-Aug-2009
First Named Inventor	Dennis Schultze
Art Unit	1638
Examiner Name	EILEEN O HARA
Attorney Docket Number	1423-150
Title	Soybean Cultivar 306601347

◉ Please withdraw me as attorney or agent for the above identified patent application and the practitioners of record associated with Customer Number: 32905

The reason(s) for this request are those described in 37 CFR:

10.40(b)(4)

Certifications

☒ I/We have given reasonable notice to the client, prior to the expiration of the response period, that the practitioner(s) intend to withdraw from employment

☒ I/We have delivered to the client or a duly authorized representative of the client all papers and property (including funds) to which the client is entitled

☒ I/We have notified the client of any responses that may be due and the time frame within which the client must respond

Change the correspondence address and direct all future correspondence to:
The address of the first named inventor or assignee that has properly made itself of record pursuant to 37 CFR 3.71, associated with Customer Number: 26263

I am authorized to sign on behalf of myself and all withdrawing practitioners.

Signature	/Robert J. Jondle/
Name	Robert J. Jondle
Registration Number	33915

UNITED STATES PATENT AND TRADEMARK OFFICE

UNITED STATES DEPARTMENT OF COMMERCE
United States Patent and Trademark Office
Address: COMMISSIONER FOR PATENTS
P.O. Box 1450
Alexandria, Virginia 22313-1450
www.uspto.gov

APPLICATION NO.	FILING DATE	FIRST NAMED INVENTOR	ATTORNEY DOCKET NO.	CONFIRMATION NO.
12/549,883	08/28/2009	Dennis L. Schultze	1423-150	9860

26263 7590 12/28/2011
SNR DENTON US LLP
P.O. BOX 061080
CHICAGO, IL 60606-1080

EXAMINER
O HARA, EILEEN B

ART UNIT	PAPER NUMBER
1638	

MAIL DATE	DELIVERY MODE
12/28/2011	PAPER

Please find below and/or attached an Office communication concerning this application or proceeding.

The time period for reply, if any, is set in the attached communication.

UNITED STATES PATENT AND TRADEMARK OFFICE

Commissioner for Patents
United States Patent and Trademark Office
P.O. Box 1450
Alexandria, VA 22313-1450
www.uspto.gov

DEC 2 8 2011

SNR DENTON US LLP
P.O. BOX 061080
CHICAGO, IL 60606-1080

In re Application of:
Dennis L. Schultze
Serial No.: 12/549,883
Filed: August 28, 2009
Attorney Docket No.: **1423-150**

: PETITION DECISION

This is in response to the petition under 37 CFR § 1.59(b), filed December 6, 2011, to expunge information from the above identified application. This application has not been allowed.

Petitioner requests that the Reply to Request for Information under 37 CFR 1.105, and attachment thereto, submitted to the Patent Office on December 6, 2011, be expunged from the record. Petitioner states either: (A) that the information contains trade secret material, proprietary material and/or material that is subject to a protective order which has not been made public; or (B) that the information submitted was unintentionally submitted and the failure to obtain its return would cause irreparable harm to the party who submitted the information or to the party in interest on whose behalf the information was submitted, and the information has not otherwise been made public. The petition fee set forth in 37 CFR § 1.17(g) has been paid.

This is an examined application which is currently under non-final rejection. As such the information provided has been reviewed, in part, but proceedings in the application have not been terminated. As stated in M.P.E.P. 724, upon allowance or other action closing prosecution in an application, petition may be made for return of Proprietary information. The information cannot be expunged at this time.

The petition is **DISMISSED**. Petitioner may resubmit the petition subsequent to a Notice of Allowability or *ex parte Quayle* action being mailed in the application. No additional petition fee will be required at that time.

Should there be any questions about this decision please contact Marianne C. Seidel by letter addressed to Director, TC 1600, at the address listed above, or by telephone at 571-272-0584 or by facsimile sent to the general Office facsimile number, 571-273-8300.

/MC Seidel/
Marianne C. Seidel, Quality Assurance Specialist
Technology Center 1600

UNITED STATES PATENT AND TRADEMARK OFFICE

Commissioner for Patents
United States Patent and Trademark Office
P.O. Box 1450
Alexandria, VA 22313-1450
www.uspto.gov

Paper No.

MAILED
JUN 21 2011
OFFICE OF PETITIONS

TEXAS INSTRUMENTS INCORPORATED
P O BOX 655474, M/S 3999
DALLAS TX 75265

In re Application of Wang, Wu, Xiong, and Zhao Application No. 12/549,908 Filed: August 28, 2009 Attorney Docket No.: TI-66903 Title: NOVEL METHOD TO IMPROVE PERFORMANCE BY ENHANCING POLY GATE DOPING CONCENTRATION IN AN EMBEDDED SIGE PMOS PROCESS	DECISION ON PETITIONS PURSUANT TO 37 C.F.R. §§ 1.47(a) AND 1.137(B)

This is a decision on the petition pursuant to 37 C.F.R. § 1.137(b), filed March 23, 2011, to revive the above-identified application. This is also a decision on the concurrently filed petition pursuant to 37 C.F.R. § 1.47(a).

This petition pursuant to 37 C.F.R. § 1.137(b) is **GRANTED.**

The petition pursuant to 37 C.F.R. § 1.47(a) is being **DISMISSED.**

The above-identified application became abandoned for failure to fully reply in a timely manner to the Notice of Missing Parts (notice), mailed September 17, 2009, which required an executed declaration, replacement drawings, and the surcharge associated with the late submission of a Rule 1.47(a) petition. The notice set a shortened statutory period for reply of two months. A partially-executed declaration was submitted on November 10, 2009, along with a $130 surcharge and two sheets of replacement drawings. Neither a fully-executed declaration nor a petition pursuant to 37 C.F.R. § 1.47(a) were received, and no extensions of time under the provisions of 37 C.F.R. § 1.136(a) were requested. Accordingly, the above-identified application became

abandoned on November 18, 2009. A notice of abandonment was mailed on September 27, 2010.

The petition pursuant to 37 C.F.R. § 1.137(b):

A grantable petition pursuant to 37 C.F.R. § 1.137(b) must be accompanied by:

(1) The reply required to the outstanding Office action or notice, unless previously filed;
(2) The petition fee as set forth in 37 C.F.R. § 1.17(m);
(3) A statement that the entire delay in filing the required reply from the due date for the reply until the filing of a grantable petition pursuant to this paragraph was unintentional. The Commissioner may require additional information where there is a question whether the delay was unintentional, and;
(4) Any terminal disclaimer (and fee as set forth in 37 C.F.R. § 1.20(d)) required pursuant to paragraph (d) of this section.

With this petition, Applicant has submitted a petition pursuant to 37 C.F.R. § 1.47(a), the petition fee, and the proper statement of unintentional delay. As such, requirements one through three of Rule 1.137(b) have been met. The fourth requirement of Rule 1.137(b) is not applicable, as a terminal disclaimer is not required.[1]

The petition pursuant to 37 C.F.R. § 1.47(a):

A grantable petition pursuant to 37 C.F.R. § 1.47(a) requires:

(1) the petition fee of $200;
(2) a surcharge of either $65 or $130 if the petition is not filed at the time of filing the application, as set forth in 37 C.F.R. § 1.16(f);
(3) a statement of the last known address of each non-signing inventor;
(4) either
    a) proof that a copy of the entire application (specification, claims, drawings, and the oath or declaration)

1 See Rule 1.137(d).

was sent or given to each non-signing inventor for review and proof that each non-signing inventor refuses to join in the application or

b) proof that each non-signing inventor cannot be found or reached after diligent effort, and;

(5) a declaration which complies with 37 C.F.R. § 1.63.

A partially-executed declaration was submitted on November 10, 2009, which was not executed by inventors Wang and Wu, along with the fee that is associated with the late submission of a Rule 1.47(a) petition. With this petition, Petitioner has submitted, *inter alia*, the petition fee, the last known address of non-signing inventors Wang and Wu,[2] proof that each was provided with a complete copy of the application,[3] proof that an executed copy of the declaration has not been obtained,[4] and a suggestion that each non-signing inventor has refused to execute the declaration.[5]

Requirements (1) - (4) of Rule 1.47(a) have been satisfied. The fifth requirement of Rule 1.47(a) has not been satisfied, as will now be pointed out.

Regarding the fifth requirement of Rule 1.47(a), it is noted that **the address for each non-signing inventor that appears on the declaration is not the same address that was given as his last known address.** Presuming that the statements of facts are to be believed (which contain the same two addresses which appear on the two letters that were sent to the non-signing inventors), Petitioner will need to submit either a new declaration or a properly titled and executed supplemental Application Data Sheet that contains the correct address for non-signing inventors Wang and Wu.

Alternatively, if the addresses which appear on the declaration are correct, a complete copy of the application will need to be sent to each of those addresses,[6] and Petitioner will need to

---

2 Petition, page 2 and Scott declaration of facts, paragraphs 2 and 3.
3 Petition, page 2 and Scott declaration of facts, paragraphs 5 and 8.
4 Petition, pages 2-3 and Scott declaration of facts, paragraph 12.
5 Petition, page 2 and two letters, each of which is dated February 18, 2011.
6 The address which appears in the declaration appears to be a typographical error, as it does not match either of the two addresses which appear in the statement of facts.

provide each non-signing joint inventor with an adequate period of time to respond before filing a renewed petition.

Any reply must be submitted within **TWO MONTHS** from the mail date of this decision. Extensions of time under 37 C.F.R. § 1.136(a) are permitted. The reply should include a cover letter entitled "Renewed Petition pursuant to 37 C.F.R. § 1.47(a)". This is not a final agency action within the meaning of 5 U.S.C § 704.

Petitioner should note that any statement that appears therein should be made by one having firsthand knowledge of the event. Statements based on hearsay are not normally accepted.

Any response to this decision should indicate in a prominent manner that the attorney handling this matter is Paul Shanoski, and may be submitted by mail,[7] hand-delivery,[8] or facsimile.[9] Registered users of EFS-Web may alternatively submit a response to this decision via EFS-Web.[10]

If responding by mail, Petitioner is advised not to place the undersigned's name on the envelope. Only the information that appears in the footnote should be included - adding anything else to the address will delay the delivery of the response to the undersigned.

Telephone inquiries regarding *this decision* should be directed to the undersigned at (571) 272-3225.[11] All other inquiries concerning examination procedures should be directed to the Technology Center.

/Paul Shanoski/
Paul Shanoski
Senior Attorney
Office of Petitions

---

7 Mail Stop Petition, Commissioner for Patents, United States Patent and Trademark Office, P.O. Box 1450, Alexandria, VA, 22313-1450.
8 Customer Window, Randolph Building, 401 Dulaney Street, Alexandria, VA, 22314.
9 (571) 273-8300: please note this is a central facsimile number.
10 https://sportal.uspto.gov/authenticate/authenticateuserlocalepf.html
11 Petitioner will note that all practice before the Office should be in writing, and the action of the Office will be based exclusively on the written record in the Office. See 37 C.F.R. § 1.2. As such, Petitioner is reminded that no telephone discussion may be controlling or considered authority for any further action(s) of Petitioner.

UNITED STATES PATENT AND TRADEMARK OFFICE

Commissioner for Patents
United States Patent and Trademark Office
P.O. Box 1450
Alexandria, VA 22313-1450
www.uspto.gov

Paper No.

MAILED
JUL 29 2011
OFFICE OF PETITIONS

TEXAS INSTRUMENTS INCORPORATED
P O BOX 655474, M/S 3999
DALLAS TX 75265

In re Application of :
Wang, Wu, Xiong, and Zhao :
Application No. 12/549,908 :
Filed: August 28, 2009 :
Attorney Docket No.: TI-66903 :
Title: NOVEL METHOD TO IMPROVE PERFORMANCE BY ENHANCING POLY GATE DOPING CONCENTRATION IN AN EMBEDDED SIGE PMOS PROCESS :

DECISION ON RENEWED PETITION PURSUANT TO 37 C.F.R. § 1.47(a)

This is a decision on the renewed petition pursuant to 37 C.F.R. § 1.47(a), filed July 7, 2011.

The renewed petition pursuant to 37 C.F.R. § 1.47(a) is **DISMISSED.**

The above-identified application became abandoned for failure to fully reply in a timely manner to the Notice of Missing Parts (notice), mailed September 17, 2009, which required an executed declaration, replacement drawings, and the surcharge associated with the late submission of a Rule 1.47(a) petition. The notice set a shortened statutory period for reply of two months. A partially-executed declaration was submitted on November 10, 2009, along with a $130 surcharge and two sheets of replacement drawings. Neither a fully-executed declaration nor a petition pursuant to 37 C.F.R. § 1.47(a) were received, and no extensions of time under the provisions of 37 C.F.R. § 1.136(a) were requested. Accordingly, the above-identified application became abandoned on November 18, 2009. A notice of abandonment was mailed on September 27, 2010.

A petition pursuant to 37 C.F.R. § 1.137(b) was filed on March 23, 2011, along with an original petition pursuant to 37 C.F.R. § 1.47(a). The former was granted and the latter was dismissed, via the mailing of a single decision on June 21, 2011.

A grantable petition pursuant to 37 C.F.R. § 1.47(a) requires:

(1) the petition fee of $200;
(2) a surcharge of either $65 or $130 if the petition is not filed at the time of filing the application, as set forth in 37 C.F.R. § 1.16(f);
(3) a statement of the last known address of each non-signing inventor;
(4) either
  a) proof that a copy of the entire application (specification, claims, drawings, and the oath or declaration) was sent or given to each non-signing inventor for review and proof that each non-signing inventor refuses to join in the application or
  b) proof that each non-signing inventor cannot be found or reached after diligent effort, and;
(5) a declaration which complies with 37 C.F.R. § 1.63.

The decision on the original petition pursuant to 37 C.F.R. § 1.47(a) indicated that requirements (1) - (4) of Rule 1.47(a) have been satisfied, and that the fifth requirement of Rule 1.47(a) has not been satisfied. The decision set forth, *in pertinent part*:

> Regarding the fifth requirement of Rule 1.47(a), it is noted that **the address for each non-signing inventor that appears on the declaration is not the same address that was given as his last known address** (emphasis included). Presuming that the statements of facts are to be believed (which contain the same two addresses which appear on the two letters that were sent to the non-signing inventors), Petitioner will need to submit either a new declaration or a properly titled and executed supplemental Application Data Sheet that contains the correct address for non-signing inventors Wang and Wu.
>
> Decision of June 21, 2011, page 3.

With this renewed petition, Petitioner has included an executed supplemental Application Data Sheet which contains the correct

addresses of the two non-signing inventors (it is noted that despite the fact that on the second page of the original Rule 1.47(a) petition it was set forth that Mr. Wu lives in the city of Plano, Texas, the letter which was sent to him was sent to the city of Allen, Texas). However, this supplemental ADS cannot be entered into the record, as it has not been titled as a "Supplemental Application Data Sheet."[1]

Any reply must be submitted within **TWO MONTHS** from the mail date of this decision. Extensions of time under 37 C.F.R. § 1.136(a) are permitted. The reply should include a cover letter entitled "Second Renewed Petition pursuant to 37 C.F.R. § 1.47(a)". This is not a final agency action within the meaning of 5 U.S.C § 704.

On second renewed petition, Petitioner should include a Supplemental ADS that has been both properly titled and executed.

Any response to this decision should indicate in a prominent manner that the attorney handling this matter is Paul Shanoski, and may be submitted by mail,[2] hand-delivery,[3] or facsimile.[4] Registered users of EFS-Web may alternatively submit a response to this decision via EFS-Web.[5] If responding by mail, Petitioner is advised not to place the undersigned's name on the envelope. Only the information that appears in the footnote should be included - adding anything else to the address will delay the delivery of the response to the undersigned. Telephone inquiries regarding *this decision* should be directed to the undersigned at (571) 272-3225.[6]

/Paul Shanoski/
Paul Shanoski
Senior Attorney
Office of Petitions

---

1 MPEP § 601.05 indicates that any ADS that is submitted to "correct, modify, or augment the original application data, the ADS, even though it is the first-filed ADS, must be titled "Supplemental Application Data Sheet."
2 Mail Stop Petition, Commissioner for Patents, United States Patent and Trademark Office, P.O. Box 1450, Alexandria, VA, 22313-1450.
3 Customer Window, Randolph Building, 401 Dulaney Street, Alexandria, VA, 22314.
4 (571) 273-8300: please note this is a central facsimile number.
5 https://sportal.uspto.gov/authenticate/authenticateuserlocalepf.html
6 Petitioner will note that all practice before the Office should be in writing, and the action of the Office will be based exclusively on the written record in the Office. See 37 C.F.R. § 1.2. As such, Petitioner is reminded that no telephone discussion may be controlling or considered authority for any further action(s) of Petitioner.

UNITED STATES PATENT AND TRADEMARK OFFICE

Commissioner for Patents
United States Patent and Trademark Office
P.O. Box 1450
Alexandria, VA 22313-1450
www.uspto.gov

Paper No.

MAILED
AUG 23 2011
OFFICE OF PETITIONS

TEXAS INSTRUMENTS INCORPORATED
P O BOX 655474, M/S 3999
DALLAS TX 75265

In re Application of :
Wang, Wu, Xiong, and Zhao :
Application No. 12/549,908 :
Filed: August 28, 2009 :
Attorney Docket No.: TI-66903 :
Title: NOVEL METHOD TO IMPROVE PERFORMANCE BY ENHANCING POLY GATE DOPING CONCENTRATION IN AN EMBEDDED SIGE PMOS PROCESS :

DECISION ON SECOND RENEWED PETITION PURSUANT TO 37 C.F.R. § 1.47(a)

This is a decision on the second renewed petition pursuant to 37 C.F.R. § 1.47(a), filed August 15, 2011.

The second renewed petition pursuant to 37 C.F.R. § 1.47(a) is **GRANTED**.

The above-identified application became abandoned for failure to fully reply in a timely manner to the Notice of Missing Parts (notice), mailed September 17, 2009, which required an executed declaration, replacement drawings, and the surcharge associated with the late submission of a Rule 1.47(a) petition. The notice set a shortened statutory period for reply of two months. A partially-executed declaration was submitted on November 10, 2009, along with a $130 surcharge and two sheets of replacement drawings. Neither a fully-executed declaration nor a petition pursuant to 37 C.F.R. § 1.47(a) were received, and no extensions of time under the provisions of 37 C.F.R. § 1.136(a) were requested. Accordingly, the above-identified application became abandoned on November 18, 2009. A notice of abandonment was mailed on September 27, 2010.

A petition pursuant to 37 C.F.R. § 1.137(b) was filed on March 23, 2011, along with an original petition pursuant to 37 C.F.R. § 1.47(a). The former was granted and the latter was dismissed, via the mailing of a single decision on June 21, 2011.

A grantable petition pursuant to 37 C.F.R. § 1.47(a) requires:

(1) the petition fee of $200;
(2) a surcharge of either $65 or $130 if the petition is not filed at the time of filing the application, as set forth in 37 C.F.R. § 1.16(f);
(3) a statement of the last known address of each non-signing inventor;
(4) either
  a) proof that a copy of the entire application (specification, claims, drawings, and the oath or declaration) was sent or given to each non-signing inventor for review and proof that each non-signing inventor refuses to join in the application or
  b) proof that each non-signing inventor cannot be found or reached after diligent effort, and;
(5) a declaration which complies with 37 C.F.R. § 1.63.

The decision on the original petition pursuant to 37 C.F.R. § 1.47(a) indicated that requirements (1) - (4) of Rule 1.47(a) have been satisfied, and that the fifth requirement of Rule 1.47(a) had not been satisfied.

A renewed petition pursuant to 37 C.F.R. § 1.47(a) was filed on July 7, 2011, and was dismissed via the mailing of a decision on July 29, 2011, which indicated that the fifth requirement of Rule 1.47(a) remained unsatisfied.

With this second renewed petition, Petitioner has included a properly titled and executed supplemental Application Data Sheet which contains the correct addresses of the two non-signing inventors. It follows that the fifth requirement of Rule 1.47(a) has been satisfied.

Consequently, each of the five requirements of 37 C.F.R. § 1.47(a) has been met.

The above-identified application and papers have been reviewed and found to be in compliance with 37 C.F.R. § 1.47(a). This application is hereby accorded Rule 1.47(a) status.

As provided in Rule 1.47, this Office will forward notice of this application's filing to the two non-signing inventors at the addresses which appear on the Supplemental ADS that was included with this second renewed petition. Notice of the filing of this application will also be published in the Official Gazette.

The Office of Patent Application Processing (OPAP) will be notified of this decision, and jurisdiction over the application is transferred to OPAP, so that the application may receive further processing.

Petitioner will receive appropriate notifications regarding the fees owed, if any, and other information in due course from OPAP.

The general phone number for OPAP is 571-272-4000. Telephone inquiries **regarding this decision** should be directed to the undersigned at (571) 272-3225.[1]

/Paul Shanoski/
Paul Shanoski
Senior Attorney
Office of Petitions

1 Petitioner will note that all practice before the Office should be in writing, and the action of the Office will be based exclusively on the written record in the Office. See 37 C.F.R. § 1.2. As such, Petitioner is reminded that no telephone discussion may be controlling or considered authority for any further action(s) of Petitioner.

UNITED STATES PATENT AND TRADEMARK OFFICE

Commissioner for Patents
United States Patent and Trademark Office
P.O. Box 1450
Alexandria, VA 22313-1450
www.uspto.gov

MAILED
AUG 23 2011
OFFICE OF PETITIONS

Xin Wang
69 Gold Street, Apt. 7E
New York, NY 10038

In re Application of :
Wang, Wu, Xiong, and Zhao :
Application No. 12/549,908 :
Filed: August 28, 2009 :
Attorney Docket No.: TI- : LETTER
66903 :
Title: NOVEL METHOD TO :
IMPROVE PERFORMANCE BY :
ENHANCING POLY GATE DOPING :
CONCENTRATION IN AN EMBEDDED :
SIGE PMOS PROCESS :
:

Dear Mr. Wang:

You are named a joint inventor in the above-identified United States patent application filed under the provisions of 35 U.S.C. § 116 (United States Code) and 37 C.F.R. § 1.47(a), Rules of Practice in Patent Cases. Should a patent be granted on the application, you will be designated therein as a joint inventor.

As a named inventor you are entitled to inspect any paper in the file wrapper of the application, order copies of all or any part thereof (at a prepaid cost per 37 C.F.R. § 1.19) or make your position of record in the application. Alternatively, you may arrange to do any of the preceding through a registered patent attorney or agent presenting written authorization from you. If you care to join the application, the attorney of record below would presumably assist you. Joining in the application would entail the filing of an appropriate oath or declaration by you pursuant to 37 C.F.R. § 1.63.

Telephone inquiries regarding this communication should be directed to the undersigned at (571) 272-3225. Requests for information regarding your application should be directed to the File Information Unit at (703) 308-2733. Information regarding how to pay for and order a copy of the application, or a specific paper in the application, should be directed to the Certification Division at (571) 272-3150 or 1-800-972-6382 (outside the Washington D.C. area).

/Paul Shanoski/
Paul Shanoski
Senior Attorney
Office of Petitions

cc: TEXAS INSTRUMENTS INCORPORATED
P O BOX 655474, M/S 3999
DALLAS TX 75265

UNITED STATES PATENT AND TRADEMARK OFFICE

Commissioner for Patents
United States Patent and Trademark Office
P.O. Box 1450
Alexandria, VA 22313-1450
www.uspto.gov

MAILED
AUG 23 2011
OFFICE OF PETITIONS

Zhiqiang Wu
1511 Juliet Drive
Allen, TX 75013

In re Application of	:	
Wang, Wu, Xiong, and Zhao	:	
Application No. 12/549,908	:	
Filed: August 28, 2009	:	
Attorney Docket No.: TI-66903	:	LETTER
Title: NOVEL METHOD TO IMPROVE PERFORMANCE BY ENHANCING POLY GATE DOPING CONCENTRATION IN AN EMBEDDED SIGE PMOS PROCESS	:	

Dear Mr. Wu:

You are named a joint inventor in the above-identified United States patent application filed under the provisions of 35 U.S.C. § 116 (United States Code) and 37 C.F.R. § 1.47(a), Rules of Practice in Patent Cases. Should a patent be granted on the application, you will be designated therein as a joint inventor.

As a named inventor you are entitled to inspect any paper in the file wrapper of the application, order copies of all or any part thereof (at a prepaid cost per 37 C.F.R. § 1.19) or make your position of record in the application. Alternatively, you may arrange to do any of the preceding through a registered patent attorney or agent presenting written authorization from you. If you care to join the application, the attorney of record below would presumably assist you. Joining in the application would entail the filing of an appropriate oath or declaration by you pursuant to 37 C.F.R. § 1.63.

Telephone inquiries regarding this communication should be directed to the undersigned at (571) 272-3225. Requests

for information regarding your application should be directed to the File Information Unit at (703) 308-2733. Information regarding how to pay for and order a copy of the application, or a specific paper in the application, should be directed to the Certification Division at (571) 272-3150 or 1-800-972-6382 (outside the Washington D.C. area).

/Paul Shanoski/
Paul Shanoski
Senior Attorney
Office of Petitions

cc: TEXAS INSTRUMENTS INCORPORATED
P O BOX 655474, M/S 3999
DALLAS TX 75265

UNITED STATES PATENT AND TRADEMARK OFFICE

UNITED STATES DEPARTMENT OF COMMERCE
United States Patent and Trademark Office
Address: COMMISSIONER FOR PATENTS
P.O. Box 1450
Alexandria, Virginia 22313-1450
www.uspto.gov

APPLICATION NO.	FILING DATE	FIRST NAMED INVENTOR	ATTORNEY DOCKET NO.	CONFIRMATION NO.
12/549,934	08/28/2009	Motoari Ota	002500-4	9952

7590 09/21/2010
Studebaker & Brackett PC
One Fountain Square
11911 Freedom Drive, Suite 750
Reston, VA 20190

EXAMINER
YE, LIN

ART UNIT	PAPER NUMBER
2622	

MAIL DATE	DELIVERY MODE
09/21/2010	PAPER

DECISION GRANTING PETITION UNDER 37 CFR 1.138(d)

The declaration of express abandonment is recognized

This is in response to the petition under 37 CFR 1.138(d), requesting for a refund of any previously paid search fee and excess claims fee in the above-identified application.

The petition is granted.

The express abandonment is recognized. Any previously paid search fee and excess claims fee are hereby refunded.

Telephone inquiries should be directed to the Office of Data Management at (571) 272-4200.

Mimi Harmes

Patent Publication Branch
Office of Data Management

FORM PET651G (Rev. 08/07)

UNITED STATES PATENT AND TRADEMARK OFFICE

Commissioner for Patents
United States Patent and Trademark Office
P.O. Box 1450
Alexandria, VA 22313-1450
www.uspto.gov

GENERAL ELECTRIC COMPANY
GLOBAL RESEARCH
ONE RESEARCH CIRCLE
BLDG. K1-3A59
NISKAYUNA NY 12309

MAILED

NOV 15 2010

OFFICE OF PETITIONS

In re Application of	:	
Ross Hartley Kenyon, et al.	:	
Application No. 12/549,943	:	DECISION ON PETITION
Filed: August 28, 2009	:	
Attorney Docket No. 234174-1	:	

This is a decision on the petition under the unintentional provisions of 37 CFR 1.137(b), filed July 13, 2010, to revive the above-identified application.

The petition is **GRANTED**.

The application became abandoned for failure to reply in a timely manner to the Requirement for Statement Under § 305 (c) of the National Aeronautics and Space Act, mailed February 22, 2010, which set a shortened statutory period for reply of thirty (30) days. Accordingly, the application became abandoned on March 23, 2010. A Notice of Abandonment was mailed on May 14, 2010.

The petition satisfies the requirements of 37 CFR 1.137(b) in that petitioner has supplied (1) the reply in the form of a Property Right Statement, (2) the petition fee of $1,620, and (3) a proper statement of unintentional delay.

Telephone inquiries concerning this decision should be directed to Terri Johnson at (571) 272-2991.

This application is being referred to Technology Center 3600 for appropriate action in the normal course of business on the reply received.

/Terri Johnson/
Terri Johnson
Petitions Examiner
Office of Petitions

UNITED STATES PATENT AND TRADEMARK OFFICE

UNITED STATES DEPARTMENT OF COMMERCE
United States Patent and Trademark Office
Address: COMMISSIONER FOR PATENTS
P.O. Box 1450
Alexandria, Virginia 22313-1450
www.uspto.gov

APPLICATION NO.	FILING DATE	FIRST NAMED INVENTOR	ATTORNEY DOCKET NO.	CONFIRMATION NO.
12/549,977	08/28/2009	Motoari OTA	002500-5	1016

7590 09/21/2010
Studebaker & Brackett PC
One Fountain Square
11911 Freedom Drive, Suite 750
Reston, VA 20190

EXAMINER
YE, LIN

ART UNIT	PAPER NUMBER
2622	

MAIL DATE	DELIVERY MODE
09/21/2010	PAPER

DECISION GRANTING PETITION UNDER 37 CFR 1.138(d)

The declaration of express abandonment is recognized

This is in response to the petition under 37 CFR 1.138(d), requesting for a refund of any previously paid search fee and excess claims fee in the above-identified application.

The petition is granted.

The express abandonment is recognized. Any previously paid search fee and excess claims fee are hereby refunded.

Telephone inquiries should be directed to the Office of Data Management at (571) 272-4200.

Patent Publication Branch
Office of Data Management

FORM PET651G (Rev. 08/07)

Doc Code: PET.AUTO **Document Description: Petition automatically granted by EFS-Web**	PTO/SB/83 U.S. Patent and Trademark Office Department of Commerce

Electronic Petition Request	**REQUEST FOR WITHDRAWAL AS ATTORNEY OR AGENT AND CHANGE OF CORRESPONDENCE ADDRESS**
Application Number	12550017
Filing Date	28-Aug-2009
First Named Inventor	Mark Falahee
Art Unit	3775
Examiner Name	ANURADHA RAMANA
Attorney Docket Number	33939/60
Title	PERCUTANEOUS FACET FIXATION SYSTEM

◉ Please withdraw me as attorney or agent for the above identified patent application and the practitioners of record associated with Customer Number: 32642

The reason(s) for this request are those described in 37 CFR:

10.40(b)(4)

Certifications

☒ I/We have given reasonable notice to the client, prior to the expiration of the response period, that the practitioner(s) intend to withdraw from employment

☒ I/We have delivered to the client or a duly authorized representative of the client all papers and property (including funds) to which the client is entitled

☒ I/We have notified the client of any responses that may be due and the time frame within which the client must respond

Change the correspondence address and direct all future correspondence to:
The address of the first named inventor or assignee that has properly made itself of record pursuant to 37 CFR 3.71, associated with Customer Number: 102983

I am authorized to sign on behalf of myself and all withdrawing practitioners.

Signature	/R. Whitney Johnson/
Name	R. Whitney Johnson
Registration Number	62997

UNITED STATES PATENT AND TRADEMARK OFFICE

Commissioner for Patents
United States Patent and Trademark Office
P.O. Box 1450
Alexandria, VA 22313-1450
www.uspto.gov

Decision Date : February 13, 2012

In re Application of :

Mark Falahee

Application No : 12550017

Filed : 28-Aug-2009

Attorney Docket No : 33939/60

DECISION ON REQUEST TO WITHDRAW AS ATTORNEY/AGENTOF RECORD

This is an electronic decision on the Request to Withdraw as attorney or agent of record under 37 CFR§ 1.36(b), filed February 13, 2012

The request is **APPROVED**

The request was signed by R. Whitney Johnson (registration no. 62997) on behalf of all attorneys/agents associated with Customer Number 32642 . All attorneys/agents associated with Customer Number 32642 have been withdrawn.

Since there are no remaining attorneys of record, all future communications from the Office will be directed to the first named inventor or assignee that has properly made itself of record pursuant to 37 CFR 3.71, with Customer number 102983 .

As a reminder, requester is required to inform the first named inventor or assignee that has properly made itself of record pursuant to 37 CFR 3.71 of the electronically processed petition.

Telephone inquiries concerning this decision should be directed to the Patent Electronic Business Center (EBC) at 866-217-9197.

Office of Petitions

UNITED STATES PATENT AND TRADEMARK OFFICE

Commissioner for Patents
United States Patent and Trademark Office
P.O. Box 1450
Alexandria, VA 22313-1450
www.uspto.gov

FOLEY HOAG, LLP
PATENT GROUP, WORLD TRADE CENTER WEST
155 SEAPORT BLVD
BOSTON MA 02110

MAILED

MAY 20 2011

OFFICE OF PETITIONS

In re Application of	:	
CARROLL, Michael C. et al.	:	
Application No. 12/550,065	:	DECISION ON PETITION
Filed: August 28, 2009	:	TO WITHDRAW
Attorney Docket No. **CRA-00203**	:	FROM RECORD
	:	

This is a decision on the Request to Withdraw as attorney or agent of record under 37 C.F.R. § 1.36(b), filed March 29, 2011.

The request is **APPROVED**.

A grantable request to withdraw as attorney/agent of record must be signed by every attorney/agent seeking to withdraw or contain a clear indication that one attorney is signing on behalf of another/others. The Office requires the practitioner(s) requesting withdrawal to certify that he, she, or they have: (1) given reasonable notice to the client, prior to the expiration of the response period, that the practitioner(s) intends to withdraw from employment; (2) delivered to the client or a duly authorized representative of the client all papers and property (including funds) to which the client is entitled; and (3) notified the client of any responses that may be due and the time frame within which the client must respond, pursuant 37 CFR 10.40(c).

The request was signed by Beth E. Arnold on behalf of all attorneys of record who are associated with customer No. 25181. All attorneys/agents associated have been withdrawn. Applicant is reminded that there is no attorney of record at this time.

The correspondence address of record has been changed and the new correspondence address is the address indicated below.

There are no outstanding Office actions at this time.

Telephone inquiries concerning this decision should be directed to the undersigned at (571) 272-4231.

Michelle R. Eason
Paralegal Specialist
Office of Petitions

cc: **IMMUNE DISEASE INSTITUTE, INC.**
3 BLACKFAN CIRCLE
BOSTON, MA 02115

UNITED STATES PATENT AND TRADEMARK OFFICE

Commissioner for Patents
United States Patent and Trademark Office
P.O. Box 1450
Alexandria, VA 22313-1450
www.uspto.gov

WONG, CABELLO, LUTSCH, RUTHERFORD & BRUCCULERI, L.L.P.
2033 SH 249 6TH FLOOR
HOUSTON, TX 77070

MAILED

JUN 30 2011

OFFICE OF PETITIONS

In re Application of	:	
Rangarajan et al.	:	DECISION ON PETITION
Application No. 12/550,078	:	TO WITHDRAW
Filed: August 28, 2009	:	FROM RECORD
Attorney Docket No. 0081-171001	:	

This is a decision on the Request to Withdraw as attorney or agent of record under 37 C.F.R. § 1.36(b), filed May 17, 2011.

The request is **DISMISSED** as involving a moot issue.

A review of the file record indicates that the power of attorney to the attorneys/agents associated with Customer Number 29855 was revoked by the assignee of the patent application on June 3, 2011. Accordingly, the request to withdraw under 37 C.F.R. § 1.36(b) is moot.

All future communications from the Office will be directed to the below-listed address until otherwise properly notified.

Telephone inquires concerning this decision should be directed to the undersigned at 571-272-3206. All other inquires concerning either the examination or status of the application should be directed to the Technology Center.

/Liana Walsh/
Liana Walsh
Petitions Examiner
Office of Petitions

cc: BRAKE HUGHES BELLERMANN LLP
C/O CPA GLOBAL
P.O. BOX 52050
MINNEAPOLIS MN 55402

UNITED STATES PATENT AND TRADEMARK OFFICE

Commissioner for Patents
United States Patent and Trademark Office
P.O. Box 1450
Alexandria, VA 22313-1450
www.uspto.gov

WONG, CABELLO, LUTSCH, RUTHERFORD & BRUCCULERI, L.L.P.
2033 SH 249 6TH FLOOR
HOUSTON, TX 77070

MAILED
JUN 30 2011
OFFICE OF PETITIONS

In re Application of	:	
Mansur et al.	:	DECISION ON PETITION
Application No. 12/550,083	:	TO WITHDRAW
Filed: August 28, 2009	:	FROM RECORD
Attorney Docket No. 0081-179001	:	

This is a decision on the Request to Withdraw as attorney or agent of record under 37 C.F.R. § 1.36(b), filed May 17, 2011.

The request is **DISMISSED** as involving a moot issue.

A review of the file record indicates that the power of attorney to the attorneys/agents associated with Customer Number 29855 was revoked by the assignee of the patent application on June 3, 2011. Accordingly, the request to withdraw under 37 C.F.R. § 1.36(b) is moot.

All future communications from the Office will be directed to the below-listed address until otherwise properly notified.

Telephone inquires concerning this decision should be directed to the undersigned at 571-272-3206. All other inquires concerning either the examination or status of the application should be directed to the Technology Center.

/Liana Walsh/
Liana Walsh
Petitions Examiner
Office of Petitions

cc: BRAKE HUGHES BELLERMANN LLP
C/O CPA GLOBAL
P.O. BOX 52050
MINNEAPOLIS MN 55402

UNITED STATES PATENT AND TRADEMARK OFFICE

UNITED STATES DEPARTMENT OF COMMERCE
United States Patent and Trademark Office
Address: COMMISSIONER FOR PATENTS
P.O. Box 1450
Alexandria, Virginia 22313-1450
www.uspto.gov

APPLICATION NO.	FILING DATE	FIRST NAMED INVENTOR	ATTORNEY DOCKET NO.	CONFIRMATION NO.
12/550,202	08/28/2009	William K. Rhodes	1463-017	1439

85110 7590 05/27/2011
Nyemaster, Goode, West, Hansell & O"Brien, P.C.
625 First Street SE
Suite 400
Cedar Rapids, IA 52401

EXAMINER
BAUM, STUART F

ART UNIT	PAPER NUMBER
1638	

NOTIFICATION DATE	DELIVERY MODE
05/27/2011	ELECTRONIC

Please find below and/or attached an Office communication concerning this application or proceeding.

The time period for reply, if any, is set in the attached communication.

Notice of the Office communication was sent electronically on above-indicated "Notification Date" to the following e-mail address(es):

ptocr@nyemaster.com
rncarter@nyemaster.com
shoge@nyemaster.com

UNITED STATES PATENT AND TRADEMARK OFFICE

Commissioner for Patents
United States Patent and Trademark Office
P.O. Box 1450
Alexandria, VA 22313-1450
www.uspto.gov

MAY 2 7 2011

Nyemaster, Goode, West, Hansell & O"Brien, P.C.
625 First Street SE
Suite 400
Cedar Rapids IA 52401

In re Application of:	:
William Rhodes	:
Serial No.: 12/550,202	: PETITION DECISION
Filed: August 28, 2009	:
Attorney Docket No.: **1463-017**	

This is in response to the petition under 37 CFR § 1.59(b), filed May 16, 2011, to expunge information from the above identified application. This application has not been allowed.

Petitioner requests that the Reply to Request for Information under 37 CFR 1.105, and attachment thereto, submitted to the Patent Office on May 11, 2011 (PTO date stamped May 16, 2011), be expunged from the record. Petitioner states either: (A) that the information contains trade secret material, proprietary material and/or material that is subject to a protective order which has not been made public; or (B) that the information submitted was unintentionally submitted and the failure to obtain its return would cause irreparable harm to the party who submitted the information or to the party in interest on whose behalf the information was submitted, and the information has not otherwise been made public. The petition fee set forth in 37 CFR § 1.17(g) has been paid.

This is an examined application which is currently under non-final rejection. As such the information provided has been reviewed, in part, but proceedings in the application have not been terminated. As stated in M.P.E.P. 724, upon allowance or other action closing prosecution in an application, petition may be made for return of Proprietary information. The information cannot be expunged at this time.

The petition is **DISMISSED**. Petitioner may resubmit the petition subsequent to a Notice of Allowability or *ex parte Quayle* action being mailed in the application. No additional petition fee will be required at that time.

Should there be any questions about this decision please contact Marianne C. Seidel by letter addressed to Director, TC 1600, at the address listed above, or by telephone at 571-272-0584 or by facsimile sent to the general Office facsimile number, 571-273-8300.

/MC Seidel/
Marianne C. Seidel, Quality Assurance Specialist
Technology Center 1600

UNITED STATES PATENT AND TRADEMARK OFFICE

Commissioner for Patents
United States Patent and Trademark Office
P.O. Box 1450
Alexandria, VA 22313-1450
www.uspto.gov

MAILED
MAR 12 2012
OFFICE OF PETITIONS

Sprinkle IP Law Group/Zimmer
1301 W. 25th Street
Suite 408
Austin, TX 78705

In re Application of	:	
Peter Thomas Miller et al.	:	
Application No. 12/550,235	:	DECISION ON PETITION
Filed: August 28, 2009	:	TO WITHDRAW
Attorney Docket No. 1292.145701	:	FROM RECORD
	:	

This is a decision on the Request to Withdraw as attorney or agent of record under 37 C.F.R. § 1.36(b), filed February 28, 2012.

The request is **moot because a revocation of power of attorney has been filed.**

A review of the file record indicates that the power of attorney to all attorneys/agents associated with the firm of Sprinkle Law Group have been revoked by the assignee of the patent application on February 21, 2012. Accordingly, the request to withdraw under 37 C.F.R. § 1.36(b) is moot.

All future communications from the Office will continue to be directed to the below listed until otherwise notified by applicant.

Telephone inquires concerning this decision should be directed to Kimberly Inabinet at 571-272-4618.

/Kimberly Inabinet/

Kimberly Inabinet
Petitions Examiner
Office of Petitions

cc: Seager, Tufte & Wickhem, LLC
1221 Nicollet Avenue
Suite 800
Minneapolis, MN 55403-2420

UNITED STATES PATENT AND TRADEMARK OFFICE

Commissioner for Patents
United States Patent and Trademark Office
P.O. Box 1450
Alexandria, VA 22313-1450
www.uspto.gov

THE LUTHER LAW FIRM, PLC
10575 N 114TH STREET
SUITE 103
SCOTTSDALE AZ 85259

MAILED

OCT 12 2010

OFFICE OF PETITIONS

In re Application of	:	
HU, Jifan	:	
Application No. 12/550,363	:	DECISION ON PETITION
Filed: August 29, 2009	:	TO WITHDRAW
Attorney Docket No. **GMR-02CIA**	:	FROM RECORD
	:	

This is a decision on the Request to Withdraw as attorney or agent of record under 37 C.F.R. § 1.36(b), filed September 17, 2010.

The request is **APPROVED**.

A grantable request to withdraw as attorney/agent of record must be signed by every attorney/agent seeking to withdraw or contain a clear indication that one attorney is signing on behalf of another/others. The Office requires the practitioner(s) requesting withdrawal to certify that he, she, or they have: (1) given reasonable notice to the client, prior to the expiration of the response period, that the practitioner(s) intends to withdraw from employment; (2) delivered to the client or a duly authorized representative of the client all papers and property (including funds) to which the client is entitled; and (3) notified the client of any responses that may be due and the time frame within which the client must respond, pursuant 37 CFR 10.40(c).

The request was signed by Barbara Luther on behalf of all attorneys of record who are associated with customer No. 51951. All attorneys/agents associated have been withdrawn. Applicant is reminded that there is no attorney of record at this time.

All future correspondence will be directed to the first named inventor Jifan Hu at the address indicated below.

There are no outstanding Office actions at this time.

Telephone inquiries concerning this decision should be directed to the undersigned at 571-272-4231.

Michelle R. Eason
Paralegal Specialist
Office of Petitions

cc: **JIFAN HU**
745 SEMINOLE WAY
PALO ALTO, CA 94303

UNITED STATES PATENT AND TRADEMARK OFFICE

Commissioner for Patents
United States Patent and Trademark Office
P.O. Box 1450
Alexandria, VA 22313-1450
www.uspto.gov

MAILED

JAN 11 2011

OFFICE OF PETITIONS

LAW OFFICES (SAN JOSE)
1230 E BASELINE RD # 103-248
MESA AZ 85204

In re Application of	:	
Andreas Dietzel et al	:	
Application No. 12/550,369	:	DECISION ON PETITION
Filed: August 29, 2009	:	
Attorney Docket No. DE920030074US2	:	

This is a decision on the petition under the unintentional provisions of 37 CFR 1.137(b), filed October 3, 2010, to revive the above-identified application.

The petition is **GRANTED**.

The petition satisfies the conditions for revival pursuant to the provisions of 37 CFR 1.137(b) in that (1) the reply in the form of an amendment; (2) the petition fee; and (3) the required statement of unintentional delay have been received. Accordingly, the reply to the nonfinal Office action mailed March 5, 2010, is accepted as having been unintentionally delayed.

Telephone inquiries concerning this decision should be directed to the undersigned at (571) 272-3208.

This application is being referred to Technology Center AU 2858 for appropriate action by the Examiner in the normal course of business.

/KOC/
Karen Creasy
Petitions Examiner
Office of Petitions

UNITED STATES PATENT AND TRADEMARK OFFICE

Commissioner for Patents
United States Patent and Trademark Office
P.O. Box 1450
Alexandria, VA 22313-1450
www.uspto.gov

MAILED
MAY 20 2011
OFFICE OF PETITIONS

IBM CORPORATION, T.J. WATSON RESEARCH CENTER
P.O. BOX 218
YORKTOWN HEIGHTS, NY 10598

In re Application of	:	
David Carmel et al	:	
Application No. 12/550,376	:	DECISION ON PETITION
Filed: August 30, 2009	:	
Attorney Docket No. IL-920090047US1	:	

This is a decision on the petition under the unintentional provisions of 37 CFR 1.137(b), filed February 24, 2011, to revive the above-identified application.

The petition is **GRANTED**.

The petition satisfies the conditions for revival pursuant to the provisions of 37 CFR 1.137(b) in that (1) the reply in the form of a substitute specification; (2) the petition fee; and (3) the required statement of unintentional delay have been received. Accordingly, the reply to the Notice to File Corrected Application Papers mailed May 28, 2010, is accepted as having been unintentionally delayed.

Telephone inquiries concerning this decision should be directed to the undersigned at (571) 272-3208.

This application is being referred to the Office of Patent Application Processing for pre-examination processing.

/KOC/
Karen Creasy
Petitions Examiner
Office of Petitions

UNITED STATES PATENT AND TRADEMARK OFFICE

Commissioner for Patents
United States Patent and Trademark Office
P.O. Box 1450
Alexandria, VA 22313-1450
www.uspto.gov

Hazen Patent Group, LLC
1534 W. Islandia Dr.
Gillbert AZ 85233

MAILED
APR 15 2011
OFFICE OF PETITIONS

In re Application of	:	
Vladimir Balakin	:	
Application No. 12/550,379	:	NOTICE
Filed: August 30, 2009	:	
Attorney Docket No. PROT0018	:	

This is in response to the paper filed March 10, 2011 under 37 CFR 1.27(c) seeking status as a small entity.

The statement claiming small entity status of March 10, 2011 has been made of record and small entity status has been accorded.

The application file is being forwarded to Technology Center 2881.

/Kimberly Inabinet/
Kimberly Inabinet
Petitions Examiner
Office of Petitions

UNITED STATES PATENT AND TRADEMARK OFFICE

UNITED STATES DEPARTMENT OF COMMERCE
United States Patent and Trademark Office
Address: COMMISSIONER FOR PATENTS
P.O. Box 1450
Alexandria, Virginia 22313-1450
www.uspto.gov

APPLICATION NO.	FILING DATE	FIRST NAMED INVENTOR	ATTORNEY DOCKET NO.	CONFIRMATION NO.
12/550,380	08/30/2009	Detlef Koll	M0002-1025	1848

24208 7590 09/09/2010
ROBERT PLOTKIN, PC
15 New England Executive Office Park
Burlington, MA 01803

EXAMINER

ART UNIT	PAPER NUMBER
2626	

NOTIFICATION DATE	DELIVERY MODE
09/09/2010	ELECTRONIC

Please find below and/or attached an Office communication concerning this application or proceeding.

The time period for reply, if any, is set in the attached communication.

Notice of the Office communication was sent electronically on above-indicated "Notification Date" to the following e-mail address(es):

RPLOTKIN@RPLOTKIN.COM

UNITED STATES PATENT AND TRADEMARK OFFICE

Commissioner for Patents
United States Patent and Trademark Office
P.O. Box 1450
Alexandria, VA 22313-1450
www.uspto.gov

ROBERT PLOTKIN, PC
15 New England Executive Office Park
Burlington MA 01803

In re Application of	:	
KOLL, DETLEF	:	DECISION ON REQUEST TO
Application No. 12/550,380	:	PARTICIPATE IN PATENT
Filed: August 30, 2009	:	PROSECUTION HIGHWAY
Attorney Docket No. **M0002-1025**	:	PROGRAM AND PETITION
	:	TO MAKE SPECIAL UNDER
	:	37 CFR 1.102(d)

This is a decision on the request to participate in the PCT Patent Prosecution Highway (PPH) pilot program and the petition under 37 CFR 1.102(d), filed June 30, 2010 to make the above-identified application special.

The request and petition are **DISMISSED**.

A grantable request to participate in the PCT-PPH pilot program and petition to make special require:

(1) The U.S. application be (a) a national stage entry of the corresponding PCT application, or (b) a national stage entry of another PCT application which claims priority to the corresponding PCT application, or (c) a national stage application that claims domestic/foreign priority to the corresponding PCT application, (d) a national application which forms the basis for the priority claim in the corresponding PCT application, or (e) a continuation application of the U.S. application which satisfies one of the above (a) to (d) scenarios.
(2) A copy of the latest international work product (WO/ISA, WO/IPEA, or IPER) in the corresponding PCT application(s) which indicates at least one claim in the PCT application has novelty, inventive step, and industrial applicability.
(3) A copy of all claims which were indicated as having novelty, inventive step and industrial applicability in the corresponding PCT application(s).
(4) English translations of the documents in (2) and (3) (if the documents are not in the English language).
(5) All the claims in the U.S. application must sufficiently correspond or be amended to sufficiently correspond to the claims which were indicated as having novelty, inventive step, and industrial applicability in the corresponding PCT application(s).
(6) Examination of the U.S. application has not begun; and
(7) An information disclosure statement listing the documents cited in the international work products (ISR, WO/ISA. WO/IPEA, IPER) of the corresponding PCT application(s) and copies of all of the documents cited in the international work products of the PCT application (unless

copies have already been filed in the U.S. application) corresponding to the U.S. application except U.S. patents or U.S. patent application publications.

The request to participate in the PCT-PPH pilot program and petition is deficient as follows:

Petitioner has not complied with item 5 above.

Regarding item 5, claims 1-6, 10-13 and 21 do not sufficiently correspond or amend to sufficiently correspond to claims 7-9 and 14-20 which were indicated as having novelty, inventive step and industrial applicability in the corresponding PCT/US 09/55479.

Applicant is given a time period of **ONE MONTH or THIRTY DAYS**, whichever is longer, from the mailing date of this decision to correct the deficiencies. **NO EXTENSION OF TIME UNDER 37 CFR 1.136 IS PERMITTED.** If the deficiencies are not corrected with the time period given, the application will await action in its regular turn.

Any response must be submitted via EFS-web.

Telephone inquiries concerning this decision should be directed to Doris To at 571-272-7629.

All other inquiries concerning the examination or status of the application should be directed to Patent Application Information Retrieval (PAIR) system.

/Doris To/

Doris To
Quality Assurance Specialist
Technology Center 2600
Communications

PTO/SB/20PCT-KR (06-10)
Approved for use through 01/31/2012. OMB 0651-0058
U.S. Patent and Trademark Office; U. S. DEPARTMENT OF COMMERCE
Under the Paperwork Reduction Act of 1995, no persons are required to respond to a collection of information unless it displays a valid OMB control number.

REQUEST FOR PARTICIPATION IN THE PATENT COOPERATION TREATY - PATENT PROSECUTION HIGHWAY (PCT-PPH) PILOT PROGRAM BETWEEN THE KOREAN INTELLECTUAL PROPERTY OFFICE (KIPO) AND THE USPTO

Application No:	12/550,380	Filing date:	2009-08-30
First Named Inventor:	KOLL, Detlef		
Title of the Invention:	Hybrid Speech Recognition		

THIS REQUEST FOR PARTICIPATION IN THE PCT-PPH PILOT PROGRAM ALONG WITH THE REQUIRED DOCUMENTS MUST BE SUBMITTED VIA EFS-WEB. INFORMATION REGARDING EFS-WEB IS AVAILABLE AT HTTP://WWW.USPTO.GOV/EBC/EFS_HELP.HTML

APPLICANT HEREBY REQUESTS PARTICIPATION IN THE PCT-PPH PROGRAM AND PETITIONS TO MAKE THE ABOVE-IDENTIFIED APPLICATION SPECIAL UNDER THE PCT-PPH PROGRAM.

The above-identified application is (1) a national stage entry of the corresponding PCT application, or (2) a national stage entry of another PCT application which claims priority to the corresponding PCT application, or (3) a national application that claims domestic/ foreign priority to the corresponding PCT application, or (4) a national application which forms the basis for the priority claim in the corresponding PCT application, or (5) a continuing application of a U.S. application that satisfies one of (1) to (4) above, or (6) a U.S. application that claims domestic benefit to a U.S. provisional application which forms the basis for the priority claim in the corresponding PCT application.

The corresponding PCT application number(s) is/are: PCT/US09/55479

The international date of the corresponding PCT application(s) is/are: 2009-08-31

I. List of Required Documents:

a. **A copy of the latest international work product (WO/ISA, WO/IPEA, or IPER) in the above–identified corresponding PCT application(s)**

- [x] Is attached.
- [ ] Is not attached because the document is already in the U.S. application.

b. **A copy of all claims which were indicated as having novelty, inventive step and industrial applicability in the above-identified corresponding PCT application(s).**

- [ ] Is attached.
- [x] Is not attached because the document is already in the U.S. application.

c. **English translations of the documents in a. and b. above are attached (if the documents are not in the English language). A statement that the English translation is accurate is attached for the document in b. above.**

This collection of information is required by 35 U.S.C. 119, 37 CFR 1.55, and 37 CFR 1.102(d). The information is required to obtain or retain a benefit by the public, which is to file (and by the USPTO to process) an application. Confidentiality is governed by 35 U.S.C. 122 and 37 CFR 1.11 and 1.14. This collection is estimated to take 2 hours to complete, including gathering, preparing, and submitting the completed application form to the USPTO. Time will vary depending upon the individual case. Any comments on the amount of time you require to complete this form and/or suggestions for reducing this burden should be sent to the Chief Information Officer, U.S. Patent and Trademark Office, U.S. Department of Commerce, P.O. Box 1450, Alexandria, VA 22313-1450. DO NOT SEND FEES OR COMPLETED FORMS TO THIS ADDRESS.

Approved for use through 01/31/2012. OMB 0651-0058
U.S.Patent and Trademark Office; U.S. DEPARTMENT OF COMMERCE
Under the Paperwork Reduction Act of 1995, no persons are required to respond to a collection of information unless it displays a valid OMB control number.

REQUEST FOR PARTICIPATION IN THE PCT-PPH PILOT PROGRAM BETWEEN THE KIPO AND THE USPTO

(continued)

Application No.:	12/550,380
First Named Inventor:	KOLL, Detlef

d. **(1) An information disclosure statement listing the documents cited in the international work products (ISR, WO/ISA, WO/IPEA, IPER) of the corresponding PCT application.**

☐ Is attached

☒ Has already been filed in the above-identified U.S. application on 2010-06-05

(2) Copies of all documents (except) for U.S. patents or U.S. patent application publications)

☐ Are attached.

Have already been filed in the above-identified U.S. application on 2010-06-05

II. Claims Correspondence Table:

Claims in US Application	Patentable Claims in the corresponding PCT Application	Explanation regarding the correspondence
7-9	7-9	Claims 7-9 in the U.S. and PCT applications are identical

III. All the claims in the US application sufficiently correspond to the patentable claims in the corresponding PCT application.

Signature /Robert Plotkin/	Date 09-15-2010
Name (Print/Typed) Robert Plotkin, Esq.	Registration Number 43,861

Privacy Act Statement

The **Privacy Act of 1974 (P.L. 93-579)** requires that you be given certain information in connection with your submission of the attached form related to a patent application or patent. Accordingly, pursuant to the requirements of the Act, please be advised that: (1) the general authority for the collection of this information is 35 U.S.C. 2(b)(2); (2) furnishing of the information solicited is voluntary; and (3) the principal purpose for which the information is used by the U.S. Patent and Trademark Office is to process and/or examine your submission related to a patent application or patent. If you do not furnish the requested information, the U.S. Patent and Trademark Office may not be able to process and/or examine your submission, which may result in termination of proceedings or abandonment of the application or expiration of the patent.

The information provided by you in this form will be subject to the following routine uses:

1. The information on this form will be treated confidentially to the extent allowed under the Freedom of Information Act (5 U.S.C. 552) and the Privacy Act (5 U.S.C 552a). Records from this system of records may be disclosed to the Department of Justice to determine whether disclosure of these records is required by the Freedom of Information Act.
2. A record from this system of records may be disclosed, as a routine use, in the course of presenting evidence to a court, magistrate, or administrative tribunal, including disclosures to opposing counsel in the course of settlement negotiations.
3. A record in this system of records may be disclosed, as a routine use, to a Member of Congress submitting a request involving an individual, to whom the record pertains, when the individual has requested assistance from the Member with respect to the subject matter of the record.
4. A record in this system of records may be disclosed, as a routine use, to a contractor of the Agency having need for the information in order to perform a contract. Recipients of information shall be required to comply with the requirements of the Privacy Act of 1974, as amended, pursuant to 5 U.S.C. 552a(m).
5. A record related to an International Application filed under the Patent Cooperation Treaty in this system of records may be disclosed, as a routine use, to the International Bureau of the World Intellectual Property Organization, pursuant to the Patent Cooperation Treaty.
6. A record in this system of records may be disclosed, as a routine use, to another federal agency for purposes of National Security review (35 U.S.C. 181) and for review pursuant to the Atomic Energy Act (42 U.S.C. 218(c)).
7. A record from this system of records may be disclosed, as a routine use, to the Administrator, General Services, or his/her designee, during an inspection of records conducted by GSA as part of that agency's responsibility to recommend improvements in records management practices and programs, under authority of 44 U.S.C. 2904 and 2906. Such disclosure shall be made in accordance with the GSA regulations governing inspection of records for this purpose, and any other relevant (*i.e.*, GSA or Commerce) directive. Such disclosure shall not be used to make determinations about individuals.
8. A record from this system of records may be disclosed, as a routine use, to the public after either publication of the application pursuant to 35 U.S.C. 122(b) or issuance of a patent pursuant to 35 U.S.C. 151. Further, a record may be disclosed, subject to the limitations of 37 CFR 1.14, as a routine use, to the public if the record was filed in an application which became abandoned or in which the proceedings were terminated and which application is referenced by either a published application, an application open to public inspection or an issued patent.
9. A record from this system of records may be disclosed, as a routine use, to a Federal, State, or local law enforcement agency, if the USPTO becomes aware of a violation or potential violation of law or regulation.

PATENT COOPERATION TREATY

From the INTERNATIONAL SEARCHING AUTHORITY

To:

PLOTKIN ROBERT

ROBERT PLOTKIN, P.C. 35 CORPORATE DRIVE 4TH FLOOR BURLINGTON MA 01803 USA

PCT

NOTIFICATION OF TRANSMITTAL OF THE INTERNATIONAL SEARCH REPORT AND THE WRITTEN OPINION OF THE INTERNATIONAL SEARCHING AUTHORITY, OR THE DECLARATION

(PCT Rule 44.1)

	Date of mailing *(day/month/year)* 09 APRIL 2010 (09.04.2010)
Applicant's or agent's file reference M0002-1025PC	**FOR FURTHER ACTION** See paragraphs 1 and 4 below
International application No. **PCT/US2009/055479**	International filing date *(day/month/year)* **31 AUGUST 2009 (31.08.2009)**
Applicant **MULTIMODAL TECHNOLOGIES, INC. et al**	

1. ☒ The applicant is hereby notified that the international search report and the written opinion of the International Searching Authority have been established and are transmitted herewith.
Filing of amendments and statement under Article 19:
The applicant is entitled, if he so wishes, to amend the claims of the international application (see Rule 46):
When? The time limit for filing such amendments is normally two months from the date of transmittal of the international search report.
Where? Directly to the International Bureau of WIPO, 34 chemin des Colombettes 1211 Geneva 20, Switzerland, Facsimile No.: +41 22 338 82 70
For more detailed instructions, see the notes on the accompanying sheet.

2. ☐ The applicant is hereby notified that no international search report will be established and that the declaration under Article 17(2)(a) to that effect and the written opinion of the International Searching Authority are transmitted herewith.

3. ☐ **With regard to any protest** against payment of (an) additional fee(s) under Rule 40.2, the applicant is notified that:
☐ the protest together with the decision thereon has been transmitted to the International Bureau together with the applicant's request to forward the texts of both the protest and the decision thereon to the designated Offices.
☐ no decision has been made yet on the protest; the applicant will be notified as soon as a decision is made.

4. **Reminders**
Shortly after the expiration of **18 months** from the priority date, the international application will be published by the International Bureau. If the applicant wishes to avoid or postpone publication, a notice of withdrawal of the international application, or of the priority claim, must reach the International Bureau as provided in Rules 90*bis*.1 and 90*bis*.3, respectively, before the completion of the technical preparations for international publication.

The applicant may submit comments on an informal basis on the written opinion of the International Searching Authority to the International Bureau. The International Bureau will send a copy of such comments to all designated Offices unless an international preliminary examination report has been or is to be established. These comments would also be made available to the public but not before the expiration of 30 months from the priority date.

Within **19 months** from the priority date, but only in respect of some designated Offices, a demand for international preliminary examination must be filed if the applicant wishes to postpone the entry into the national phase **until 30 months** from the priority date (in some Offices even later); otherwise, the applicant must, **within 20 months** from the priority date, perform the prescribed acts for entry into the national phase before those designated Offices.

In respect of other designated Offices, the time limit of **30 months** (or later) will apply even if no demand is filed within 19 months.

See the Annex to Form PCT/IB/301 and, for details about the applicable time limits, Office by Office, see the *PCT Applicant's Guide*, National Chapters.

Name and mailing address of the ISA/KR Korean Intellectual Property Office Government Complex-Daejeon, 139 Seonsa-ro, Seo-gu, Daejeon 302-701, Republic of Korea Facsimile No. 82-42-472-7140	Authorized officer COMMISSIONER Telephone No. 82-42-481-8552

NOTES TO FORM PCT/ISA/220

These Notes are intended to give the basic instructions concerning the filing of amendments under Article 19. The Notes are based on the requirements of the Patent Cooperation Treaty, the Regulations and the Administrative Instructions under that Treaty. In case of discrepancy between these Notes and those requirements, the latter are applicable. For more detailed information, see also the *PCT Applicant's Guide*.

In these Notes, "Article", "Rule" and "Section" refer to the provisions of the PCT, the PCT Regulations and the PCT Administrative Instructions, respectively.

INSTRUCTIONS CONCERNING AMENDMENTS UNDER ARTICLE 19

The applicant has, after having received the international search report and the written opinion of the International Searching Authority, one opportunity to amend the claims of the international application. It should however be emphasized that, since all parts of the international application (claims, description and drawings) may be amended during the international preliminary examination procedure, there is usually no need to file amendments of the claims under Article 19 except where, e.g. the applicant wants the latter to be published for the purposes of provisional protection or has another reason for amending the claims before international publication. Furthermore, it should be emphasized that provisional protection is available in some States only (see *PCT Applicant's Guide*, Annex B).

The attention of the applicant is drawn to the fact that ammendments to the claims under Article 19 are not allowed where the International Searching Authority has declared, under Article 17(2), that no international search report would be established (see *PCT Applicant's Guide*, paragraph 296).

What parts of the international application may be amended ?

Under Article 19, only the claims may be amended.

During the international phase, the claims may also be amended (or further amended) under Article 34 before the International Preliminary Examining Authority. The description and drawings may only be amended under Article 34 before the International Preliminary Examining Authority.

Upon entry into the national phase, all parts of the international application may be amended under Article 28 or, where applicable, Article 41.

When ? Within 2 months from the date of transmittal of the international search report or 16 months from the priority date, whichever time limit expires later. It should be noted, however, that the amendments will be considered as having been received on time if they are received by the International Bureau after the expiration of the applicable time limit but before the completion of the technical preparations for international publication (Rule 46.1).

Where not to file the amendments ?

The amendments may only be filed with the International Bureau and not with the receiving Office or the International Searching Authority (Rule 46.2).

Where a demand for international preliminary examination has been/is filed, see below.

How ? Either by cancelling one or more entire claims, by adding one or more new claims or by amending the text of one or more of the claims as filed.

A replacement sheet or sheets containing a complete set of claims in replacement of all the claims previously filed must be submitted.
Where a claim is cancelled, no renumbering of the other claims is required. In all cases where claims are renumbered, they must be renumbered consecutively .in Arabic numerals (Section 205(a)).

The amendments must be made in the language in which the international application is to be published.

What documents must/may accompany the amendments ?

Letter (Section 205(b)):
The amendments must be submitted with a letter.
The letter will not be published with the international application and the amended claims. It should not be confused with the "Statement under Article 19(1)" (see below,under "Statement under Article 19(1)").
The letter must be in English or French, at the choice of the applicant. However, if the language of the international application is English, the letter must be in English; if the language of the international application is French, the letter must be in French.

NOTES TO FORM PCT/ISA/220 (continued)

The letter must indicate the differences between the claims as filed and the claims as amended. It must, in particular, indicate, in connection with each claim appearing in the international application (it being understood that identical indications concerning several claims may be grouped), whether

(i) the claim is unchanged;
(ii) the claim is cancelled;
(iii) the claim is new;
(iv) the claim replaces one or more claims as filed;
(v) the claim is the result of the division of a claim as filed.

The following examples illustrate the manner in which amendments must be explained in the accompanying letter:

1. [Where originally there were 48 claims and after amendment of some claims there are 51]:
   "Claims 1 to 29, 31, 32, 34, 35, 37 to 48 replaced by amended claims bearing the same numbers; claims 30, 33 and 36 unchanged; new claims 49 to 51 added."
2. [Where originally there were 15 claims and after amendment of all claims there are 11]:
   "Claims 1 to 15 replaced by amended claims 1 to 11."
3. [Where originally there were 14 claims and the amendments consist in cancelling some claims and in adding new claims]:
   "Claims 1 to 6 and 14 unchanged; claims 7 to 13 cancelled; new claims 15, 16 and 17 added." or
   "Claims 7 to 13 cancelled; new claims 15, 16 and 17 added; all other claims unchanged."
4. [Where various kinds of amendments are made]:
   "Claims 1 - 10 unchanged; claims 11 to 13, 18 and 19 cancelled; claims 14, 15 and 16 replaced by amended claim 14; claim 17 subdivided into amended claims 15, 16 and 17; new claims 20 and 21 added."

"Statement under Article 19(1)" (Rule 46.4)

The amendments may be accompanied by a statement explaining the amendments and indicating any impact that such amendments might have on the description and the drawings (which cannot be amended under Article 19(1)).

The statement will be published with the international application and the amended claims.

It must be in the language in which the international application is to be published.

It must be brief, not exceeding 500 words if in English or if translated into English.

It should not be confused with and does not replace the letter indicating the differences between the claims as filed and as amended. It must be filed on a separate sheet and must be indentified as such by a heading, preferably by using the words "Statement under Article 19(1)."

It may not contain any disparaging comments on the international search report or the relevance of citations contained in that report. Reference to citations, relevant to a given claim, contained in the international search report may be made only in connection with an amendment of that claim.

Consequence if a demand for international preliminary examination has already been filed

If, at the time of filing any amendments and any accompanying statement, under Article 19, a demand for international preliminary examination has already been submitted, the applicant must preferably, at the time of filing the amendments (and any statement) with the International Bureau, also file with the International Preliminary Examining Authority a copy of such amendments (and of any statement) and, where required, a translation of such amendments for the proceduer before that Authority (see Rules 55.3(a) and 62.2, first sentence). For further information, see the Notes to the demand form (PCT/IPEA/401).

If a demand for international preliminary examination is made, the written opinion of the International Searching Authority will, except in certain cases where the International Preliminary Examining Authority did not act as International Searching Authority and where it has notified the International Bureau under Rule 66.1*bis*(b), be considered to be a written opinion of the International Preliminary Examining Authority. If a demand is made, the applicant may submit to the International Preliminary Examining Authority a reply to the written opinion together, where appropriate, with amendments before the expiration of 3 months from the date of mailing of Form PCT/ISA/220 or before the expiration of 22 months from the priority date, whichever expires later (Rule 43*bis*.1(c)).

Consequence with regard to translation of the international application for entry into the national phase

The applicant's attention is drawn to the fact that, upon entry into the national phase, a translation of the claims as amended under Article 19 may have to be furnished to the designated/elected Offices, instead of, or in addition to , the translation of the claims as filed.

For further details on the requirements of each designated/elected Office, see the *PCT Applicant's Guide*, National Chapters.

* Attention

Copies of the documents cited in the international search report can be searched in the following Korean Intellectual Property Office English website for three months from the date of mailing of the international search report.

http://www.kipo.go.kr/en/ => Patent Search => PCT-Service

ID : PCT international application number
PW : **S3SCCZ8W**

Inquiries related to PCT International Search Report or Written Opinion prepared by KIPO as an International Searching Authority can be answered not only by KIPO but also through IPKC (Intellectual Property Korea Center), located in Vienna, VA, which functions as a PCT Help Desk for PCT applicants.

Homepage: http://www.ipkcenter.com
Email: ipkc@ipkcenter.com
Phone: +1 703 388 1066
Fax: +1 703 388 1084

PATENT COOPERATION TREATY

PCT

INTERNATIONAL SEARCH REPORT

(PCT Article 18 and Rules 43 and 44)

Applicant's or agent's file reference M0002-1025PC	FOR FURTHER ACTION	see Form PCT/ISA/220 as well as, where applicable, item 5 below.
International application No. **PCT/US2009/055479**	International filing date *(day/month/year)* **31 AUGUST 2009 (31.08.2009)**	(Earliest) Priority Date *(day/month/year)* 29 AUGUST 2008 (29.08.2008)
Applicant **MULTIMODAL TECHNOLOGIES, INC. et al**		

This International search report has been prepared by this International Searching Authority and is transmitted to the applicant according to Article 18. A copy is being transmitted to the International Bureau.

This international search report consists of a total of 3 sheets.

☐ It is also accompanied by a copy of each prior art document cited in this report.

1. **Basis of the report**
   a. With regard to the **language**, the international search was carried out on the basis of:
      ☒ the international application in the language in which it was filed
      ☐ a translation of the international application into _____, which is the language of a translation furnished for the purposes of international search (Rules 12.3(a) and 23.1(b))
   b. ☐ This international search report has been established taking into account the **rectification of an obvious mistake** authorized by or notified to this Authority under Rule 91 (Rule 43.6*bis*(a)).
   c. ☐ With regard to any **nucleotide and/or amino acid sequence** disclosed in the international application, see Box No. I.
2. ☐ **Certain claims were found unsearchable** (See Box No. II)
3. ☐ **Unity of invention is lacking** (See Box No. III)
4. With regard to the **title**,
   ☒ the text is approved as submitted by the applicant.
   ☐ the text has been established by this Authority to read as follows:
5. With regard to the **abstract**,
   ☒ the text is approved as submitted by the applicant.
   ☐ the text has been established, according to Rule 38.2, by this Authority as it appears in Box No. IV. The applicant may, within one month from the date of mailing of this international search report, submit comments to this Authority.
6. With regard to the drawings,
   a. the figure of the **drawings** to be published with the abstract is Figure No. 1
      ☒ as suggested by the applicant.
      ☐ as selected by this Authority, because the applicant failed to suggest a figure.
      ☐ as selected by this Authority, because this figure better characterizes the invention.
   b. ☐ none of the figure is to be published with the abstract.

INTERNATIONAL SEARCH REPORT

International application No.
PCT/US2009/055479

A. CLASSIFICATION OF SUBJECT MATTER

G10L 19/00(2006.01)i

According to International Patent Classification (IPC) or to both national classification and IPC

B. FIELDS SEARCHED

Minimum documentation searched (classification system followed by classification symbols)

IPC : G10L 19/00; G06F 17/00; G06F 3/16; G10L 15/00; G10L 15/06; G10L 15/22; G10L 15/26; G10L 15/28

Documentation searched other than minimum documentation to the extent that such documents are included in the fields searched

Korean utility models and applications for utility models

Japanese utility models and applications for utility models

Electronic data base consulted during the international search (name of data base and, where practicable, search terms used)

eKOMPASS(KIPO internal) & Keywords: audio, speech, server, network, recongni*, client, distribute, hybrid

C. DOCUMENTS CONSIDERED TO BE RELEVANT

Category*	Citation of document, with indication, where appropriate, of the relevant passages	Relevant to claim No.
X Y A	US 6898567 B2 (SENAKA BALASURIYA) 24 May 2005 See column 4, line 15-column 6, line 3; column 8, lines 28-38; figures 3, 5.	13,21 1-6,10-12 7-9,14-20
Y	KR 10-2006-0089288 A (HYUNDAI AUTONET CO., LTD.) 09 August 2006 See claim 3, figures 1, 3, and 6.	1-6,10-12
A	JP 2005-249829 A (ADVANCED MEDIA INC) 15 September 2005 See abstract, claim 1, figures 1-3.	1-21
A	JP 2007-033901 A (NEC CORP) 08 February 2007 See abstract, claim 1-2, 7-8.	1-21

☐ Further documents are listed in the continuation of Box C.

☒ See patent family annex.

* Special categories of cited documents:

"A" document defining the general state of the art which is not considered to be of particular relevance

"E" earlier application or patent but published on or after the international filing date

"L" document which may throw doubts on priority claim(s) or which is cited to establish the publication date of citation or other special reason (as specified)

"O" document referring to an oral disclosure, use, exhibition or other means

"P" document published prior to the international filing date but later than the priority date claimed

"T" later document published after the international filing date or priority date and not in conflict with the application but cited to understand the principle or theory underlying the invention

"X" document of particular relevance; the claimed invention cannot be considered novel or cannot be considered to involve an inventive step when the document is taken alone

"Y" document of particular relevance; the claimed invention cannot be considered to involve an inventive step when the document is combined with one or more other such documents,such combination being obvious to a person skilled in the art

"&" document member of the same patent family

Date of the actual completion of the international search	Date of mailing of the international search report
08 APRIL 2010 (08.04.2010)	**09 APRIL 2010 (09.04.2010)**

Name and mailing address of the ISA/KR	Authorized officer
Korean Intellectual Property Office Government Complex-Daejeon, 139 Seonsa-ro, Seo-gu, Daejeon 302-701, Republic of Korea Facsimile No. 82-42-472-7140	JANG Ho Keun Telephone No. 82-42-481-8187

INTERNATIONAL SEARCH REPORT

Information on patent family members

International application No.

PCT/US2009/055479

Patent document cited in search report	Publication date	Patent family member(s)	Publication date
US 6898567 B2	24.05.2005	AU 2002-367354 A1	24.07.2003
		CN 1633679 A	29.06.2005
		CN 1633679 C0	06.06.2007
		FI 20040872 A	25.08.2004
		FI 20040872 D0	23.06.2004
		JP 2005-524859 A	18.08.2005
		KR 10-0632912 B1	13.10.2006
		US 2003-0139924 A1	24.07.2003
		WO 03-058604 A1	17.07.2003
KR 10-2006-0089288 A	09.08.2006	None	
JP 2005-249829 A	15.09.2005	None	
JP 2007-033901 A	08.02.2007	CN 1905007 A	31.01.2007
		CN 1905007 C0	31.01.2007
		US 2007-0027693 A1	01.02.2007

PATENT COOPERATION TREATY

From the
INTERNATIONAL SEARCHING AUTHORITY

To:
PLOTKIN ROBERT

ROBERT PLOTKIN, P.C. 35 CORPORATE DRIVE 4TH FLOOR BURLINGTON MA 01803 USA

PCT

WRITTEN OPINION OF THE INTERNATIONAL SEARCHING AUTHORITY

(PCT Rule 43bis.1)

Date of mailing *(day/month/year)*	**09 APRIL 2010 (09.04.2010)**
Applicant's or agent's file reference M0002-1025PC	**FOR FURTHER ACTION** See paragraph 2 below

International application No.	International filing date *(day/month/year)*	Priority date *(day/month/year)*
PCT/US2009/055479	**31 AUGUST 2009 (31.08.2009)**	29 AUGUST 2008 (29.08.2008)

International Patent Classification (IPC) or both national classification and IPC

G10L 19/00(2006.01)i

Applicant

MULTIMODAL TECHNOLOGIES, INC. et al

1. This opinion contains indications relating to the following items:

- [X] Box No. I Basis of the opinion
- [ ] Box No. II Priority
- [ ] Box No. III Non-establishment of opinion with regard to novelty, inventive step and industrial applicability
- [ ] Box No. IV Lack of unity of invention
- [X] Box No. V Reasoned statement under Rule 43bis.1(a)(i) with regard to novelty, inventive step or industrial applicability; citations and explanations supporting such statement
- [ ] Box No. VI Certain documents cited
- [ ] Box No. VII Certain defects in the international application
- [ ] Box No. VIII Certain observations on the international application

2. **FURTHER ACTION**

If a demand for international preliminary examination is made, this opinion will be considered to be a written opinion of the International Preliminary Examining Authority ("IPEA") except that this does not apply where the applicant chooses an Authority other than this one to be the IPEA and the chosen IPEA has notified the International Bureau under Rule 66.1bis(b) that written opinions of this International Searching Authority will not be so considered.

If this opinion is, as provided above, considered to be a written opinion of the IPEA, the applicant is invited to submit to the IPEA a written reply together, where appropriate, with amendments, before the expiration of 3 months from the date of mailing of Form PCT/ISA/220 or before the expiration of 22 months from the priority date, whichever expires later.
For further options, see Form PCT/ISA/220.

3. For further details, see notes to Form PCT/ISA/220.

Name and mailing address of the ISA/KR	Date of completion of this opinion	Authorized officer
Korean Intellectual Property Office Government Complex-Daejeon, 139 Seonsa-ro, Seo-gu, Daejeon 302-701, Republic of Korea Facsimile No. 82-42-472-7140	08 APRIL 2010 (08.04.2010)	JANG Ho Keun Telephone No.82-42-481-8187

WRITTEN OPINION OF THE INTERNATIONAL SEARCHING AUTHORITY

International application No.
PCT/US2009/055479

Box No. I Basis of this opinion

1. With regard to the **language**, this opinion has been established on the basis of :

   ☒ the international application in the language in which it was filed

   ☐ a translation of the international application into _____ , which is the language of a translation furnished for the purposes of international search (Rules 12.3(a) and 23.1(b))

2. ☐ This opinion has been established taking into account the **rectification of an obvious mistake** authorized by or notified to this Authority under Rule 91 (Rule 43*bis*.1(a))

3. With regard to any **nucleotide and/or amino acid sequence** disclosed in the international application, this opinion has been established on the basis of:

   a. a sequence listing filed or furnished
      ☐ on paper
      ☐ in electronic form

   b. time of filing or furnishing
      ☐ contained in the international application as filed.
      ☐ filed together with the international application in electronic form.
      ☐ furnished subsequently to this Authority for the purposes of search.

4. ☐ In addition, in the case that more than one version or copy of a sequence listing has been filed or furnished, the required statements that the information in the subsequent or additioanl copies is identical to that in the application as filed or does not go beyond the application as filed, as appropriate, were furnished.

5. Additional comments:

WRITTEN OPINION OF THE INTERNATIONAL SEARCHING AUTHORITY

International application No.
PCT/US2009/055479

Box No. V Reasoned statement under Rule 43bis.1(a)(i) with regard to novelty, inventive step or industrial applicability; citations and explanations supporting such statement

1. Statement

Novelty (N)	Claims	1-21	YES
	Claims	NONE	NO
Inventive step (IS)	Claims	7-9,14-20	YES
	Claims	1-6,10-13,21	NO
Industrial applicability (IA)	Claims	1-21	YES
	Claims	NONE	NO

2. Citations and explanations :

Reference is made to the following documents:

D1: US 6898567 B2 (SENAKA BALASURIYA) 24 May 2005
D2: KR 10-2006-0089288 A (HYUNDAI AUTONET CO., LTD.) 09 August 2006
D3: JP 2005-249829 A (ADVANCED MEDIA INC) 15 September 2005
D4: JP 2007-033901 A (NEC CORP) 08 February 2007

1. Novelty and Inventive Step

1.1 Independent Claims 1 and 4

D1, which is considered to be the closest prior art to the subject matter of claim 1, discloses the features of providing an audio command to a first speech recognition engine, providing the audio command to at least one second speech recognition engine in the network device and recognizing the audio command within the first speech recognition engine to generate at least one first recognized audio command. Claim 1 differs from D1 in that D1 does not explicitly disclose the feature of determining whether a second automatic speech recognition engine, in a server device, is accessible to the client device. However, it is well known that D2 discloses the feature of providing a locally recognized result as a final result to the requester if the server result is not arrived. It would be obvious to a person skilled in the art to determine whether the server engine is accessible from the disclosure of D2. Accordingly, claim 1 would have been obvious over D1 in view of D2. Therefore, claim 1 lacks an inventive step under PCT Article 33(3).

Claim 4 describes the same features as claim 1 and differs only by the category of the invention. Therefore, for the same reason as that of claim 1, the subject matter of claim 4 lacks an inventive step in view of D1 over D2 under PCT Article 33(3).

1.2 Dependent Claims 2 and 3

The additional feature of claims 2 and 3 depending on claim 1 is identical to the feature of a user terminal of D1 or a telematics system of D2. Therefore, claims 2 and 3 lack an inventive step under PCT Article 33(3).

1.3 Independent Claims 5 and 6

D1, which is considered to be the closest prior art to the subject matter of claim 5, discloses the features of providing the audio command to a speech recognition engine in the network device and recognizing the audio command within the speech recognition engine to generate at least one second recognized audio command. Claim 5 differs from D1 in that D1 does not explicitly disclose the feature of determining whether a second automatic speech recognition engine, in a client device, is accessible to the client device. However, it is well known that D2 discloses the feature of providing a server recognized result as a final result to the requester if the local result is not arrived. It would be obvious to a person skilled in the art to determine whether the local engine
(Continued on Supplemental Box)

Supplemental Box

In case **the space in any of the preceding boxes is not sufficient.**
Continuation of:

Box V

is accessible from the disclosure of D2. Accordingly, claim 5 would have been obvious over D1 in view of D2. Therefore, claim 5 lacks an inventive step under PCT Article 33(3).

Claim 6 describes the same features as claim 5 and differs only by the category of the invention. Therefore, for the same reason as that of claim 5, the subject matter of claim 6 lacks an inventive step in view of D1 over D2 under PCT Article 33(3).

1.4 Claims 7-9

The subject matter of claim 7 differs from these prior art documents in that claim 7 comprises the features of determining whether second speech recognition results have been received by the client device from the second automatic speech recognition engine within a predetermined time period after the first time; if the second speech recognition results have been received by the client device within the predetermined time period, then providing the second speech recognition results to the requester in response to the request; and if the second speech recognition results have not been received by the client device within the predetermined time period, then providing the first speech recognition results to the requester in response to the request. And it is not obvious to a person skilled in the art by the documents, taken alone or in combination. Therefore, claim 7 meets the requirements of PCT Article 33(2) and (3) with respect to novelty and inventive step.

Claim 8 are dependent on claim 7 and therefore meet the requirements of PCT Article 33(2) and (3).

Claim 9 describes the same features as claim 7 and differs only by the category of the invention. Therefore, for the same reason as that of claim 7, the subject matter of claim 9 meets the requirements of PCT Article 33(2) and (3) with respect to novelty and inventive step.

1.5 Independent Claims 10 and 12

D1, which is considered to be the closest prior art to the subject matter of claim 10, discloses the features of providing an audio command to a first speech recognition engine, providing the audio command to at least one second speech recognition engine in the network device, recognizing the audio command within the first speech recognition engine to generate at least one first recognized audio command and selecting one recognized audio command having a recognized audio command confidence value. Claim 10 differs from D1 in that D1 does not explicitly disclose the feature of determining whether a confidence measure associated with the first speech recognition results exceeds a predetermined threshold; and if the confidence measure exceeds the predetermined threshold, then providing the first speech recognition results to the requester in response to the request. However, it is well known that D1 discloses the feature of weighting the at least one confidence value by a first weighting factor. It would be obvious to a person skilled in the art to weight more heavily the result from the first speech recognition engine. Accordingly, claim 10 would have been obvious over D1 in view of D2. Therefore, claim 10 lacks an inventive step under PCT Article 33(3).

Claim 12 describes the same features as claim 10 and differs only by the category of the invention. Therefore, for the same reason as that of claim 10, the subject matter of claim 12 lacks an inventive step in view of D1 over D2 under PCT Article 33(3).

1.6 Dependent Claim 11

The additional feature of claim 11 depending on claim 10 is identical to the feature of recognizing the audio command within the at least one second speech recognition engine and selecting at least one recognized audio command having a recognized audio command confidence value. Therefore, claim 11 lacks
Continued on Supplemental Box

Supplemental Box

In case **the space in any of the preceding boxes is not sufficient.**
Continuation of:

an inventive step under PCT Article 33(3).

1.7 Independent Claims 13 and 21

D1, which is considered to be the closest prior art to the subject matter of claim 13, discloses the features of providing an audio command to a first speech recognition engine, providing the audio command to at least one second speech recognition engine in the network device, recognizing the audio command within the first speech recognition engine to generate at least one first recognized audio command, recognizing the audio command within the at least one second speech recognition engine to generate at least one second recognized audio command, and selecting at least one recognized audio command from the first recognized audio command and the second recognizing audio command. Claim 13 differs from D1 in that D1 does not explicitly disclose the hybrid speech recognition results. However, it is well known that D1 discloses the feature of weighting the at least one confidence value by a first weighting factor and weighting the at least one second confidence values by a second weight factor prior to selecting one recognized audio command. Accordingly, claim 13 would have been obvious over D1 in view of D2. Therefore, claim 13 lacks an inventive step under PCT Article 33(3).

Claim 21 describes the same features as claim 13 and differs only by the category of the invention. Therefore, for the same reason as that of claim 13, the subject matter of claim 21 lacks an inventive step in view of D1 over D2 under PCT Article 33(3).

1.8 Dependent Claims 14-20

The additional features of claims 14-20 depending on claim 13 are not disclosed in any of the prior art documents, nor is it obvious to a person skilled in the art by the documents. Accordingly, claims 14-20 are novel and involves an inventive step under PCT Article 33(2) and (3).

2. Industrial Applicability

Claims 1-21 are industrially applicable under PCT Article 33(4).

UNITED STATES PATENT AND TRADEMARK OFFICE

UNITED STATES DEPARTMENT OF COMMERCE
United States Patent and Trademark Office
Address: COMMISSIONER FOR PATENTS
P.O. Box 1450
Alexandria, Virginia 22313-1450
www.uspto.gov

APPLICATION NO.	FILING DATE	FIRST NAMED INVENTOR	ATTORNEY DOCKET NO.	CONFIRMATION NO.
12/550,380	08/30/2009	Detlef Koll	M0002-1025	1848

24208 7590 10/14/2010
ROBERT PLOTKIN, PC
15 New England Executive Office Park
Burlington, MA 01803

EXAMINER

ART UNIT	PAPER NUMBER
2626	

NOTIFICATION DATE	DELIVERY MODE
10/14/2010	ELECTRONIC

Please find below and/or attached an Office communication concerning this application or proceeding.

The time period for reply, if any, is set in the attached communication.

Notice of the Office communication was sent electronically on above-indicated "Notification Date" to the following e-mail address(es):

RPLOTKIN@RPLOTKIN.COM

UNITED STATES PATENT AND TRADEMARK OFFICE

Commissioner for Patents
United States Patent and Trademark Office
P.O. Box 1450
Alexandria, VA 22313-1450
www.uspto.gov

ROBERT PLOTKIN, PC
15 New England Executive Office Park
Burlington MA 01803

In re Application of	:	
KOLL, DETLEF	:	DECISION ON REQUEST TO
Application No. 12/550,380	:	PARTICIPATE IN PATENT
Filed: August 30, 2009	:	PROSECUTION HIGHWAY
Att. Docket No. **M0002-1025**	:	PROGRAM AND PETITION
	:	TO MAKE SPECIAL UNDER
	:	37 CFR 1.102(a)

This is a decision on the renewed request to participate in the PCT Patent Prosecution Highway (PPH) pilot program and the petition under 37 CFR 1.102(d), filed September 15, 2010 to make the above-identified application special.

The request and petition are **GRANTED**.

A grantable request to participate in the PCT-PPH pilot program and petition to make special require:

(1) The U.S. application be (a) a national stage entry of the corresponding PCT application, or (b) a national stage entry of another PCT application which claims priority to the corresponding PCT application, or (c) a national stage application that claims domestic/foreign priority to the corresponding PCT application, (d) a national application which forms the basis for the priority claim in the corresponding PCT application, or (e) a continuation application of the U.S. application which satisfies one of the above (a) to (d) scenarios.
(2) A copy of the latest international work product (WO/ISA, WO/IPEA, or IPER) in the corresponding PCT application(s) which indicates at least one claim in the PCT application has novelty, inventive step, and industrial applicability.
(3) A copy of all claims which were indicated as having novelty, inventive step and industrial applicability in the corresponding PCT application(s).
(4) English translations of the documents in (2) and (3) (if the documents are not in the English language).
(5) All the claims in the U.S. application must sufficiently correspond or be amended to sufficiently correspond to the claims which were indicated as having novelty, inventive step, and industrial applicability in the corresponding PCT application(s).
(6) Examination of the U.S. application has not begun; and
(7) An information disclosure statement listing the documents cited in the international work products (ISR, WO/ISA. WO/IPEA, IPER) of the corresponding PCT application(s) and copies of all of the documents cited in the international work products of the PCT application (unless

copies have already been filed in the U.S. application) corresponding to the U.S. application except U.S. patents or U.S. patent application publications.

The request to participate in the PCT-PPH pilot program and petition now comply with the above requirements. Accordingly, the above-identified application has been accorded "special" status.

Telephone inquiries concerning this decision should be directed to Doris To at 571-272-7629.

All other inquiries concerning the examination or status of the application should be directed to Patent Application Information Retrieval (PAIR) system.

The application is being forwarded to the examiner for action on the merits commensurate with this decision.

/Doris To/

Doris To
Quality Assurance Specialist
Technology Center 2600
Communications