UNITED STATES PATENT AND TRADEMARK OFFICE

Commissioner for Patents
United States Patent and Trademark Office
P.O. Box 1450
Alexandria, VA 22313-1450
www.uspto.gov

MAILED

NOV 29 2010

PCT LEGAL ADMINISTRATION

SHERIDAN ROSS PC
1560 BROADWAY
SUITE 1200
DENVER CO 80202

In re Application of	:	
STAMP, Kevin, et al.	:	
Application No.: 12/601,220	:	DECISION
PCT No.: PCT/GB2007/004870	:	
Int. Filing Date: 18 December 2007	:	ON PETITION UNDER
Priority Date: 18 December 2006	:	
Docket No.: 7095MH-9	:	37 CFR 1.47(a)
For: IMPROVED AUTOINJECTOR	:	

This is a decision on applicants' Petition Under 37 CFR 1.47(a), filed in the United States Patent and Trademark Office (USPTO) on 25 August 2010.

BACKGROUND

On 25 March 2010, the Office mailed Notification of Missing Requirements (Form PCT/DO/EO/905) indicating that, *inter alia*, an oath or declaration was required.

On 25 August 2010, applicants filed a petition under 37 CFR 1.47(a), a declaration and the fee for a three month extension of time.

DISCUSSION

A petition under 37 CFR 1.47 must be accompanied by: (1) the fee under 37 CFR 1.17(h), (2) proof of pertinent facts, namely that the inventor refuses to sign after being presented with the application papers or cannot be reached after diligent effort, (3) a statement of the last known address of the inventor, and (4) an oath or declaration by the 37 CFR 1.47(a) applicant on behalf of himself or herself and the nonsigning applicant.

Items (1), (3) and (4) have been met. The petition fee has been paid. Applicant states the last known address of 57 Greenhead Gardens, Chapeltown, Sheffield, S35 1AR, United Kingdom. The declaration complies with 37 CFR 1.497(a)-(b) and 37 CFR 1.47.

Item (2) has not been satisfied. Where a refusal of the inventor to sign the application papers is alleged, the circumstances of the presentation of the complete copy of the application papers and of the refusal must be specified in a statement of facts by the person who presented the inventor with the application papers and/or to whom the refusal was made. MPEP 409.03(d). Here, a complete copy of the application papers was not sent with the declaration. The declaration asks the inventor to state under penalty of law that the inventor has reviewed the

contents of the application. It is not unreasonable to expect contemporaneous presentation of both the application and the oath or declaration. If applicants had included a complete copy of the application papers, applicants would still have to establish that the last known address is a current address and that the letter was sent to that address. Is there a signature receipt for the mail or any evidence that this package was delivered to the inventor. The tracking information only says "Chapeltown."

CONCLUSION

For the above reasons, applicant's petition under 37 CFR 1.47(a) is **DISMISSED** without prejudice.

If reconsideration on the merits of this petition is desired, a proper response must be filed within **TWO (2) MONTHS** from the mail date of this decision. Failure to timely file the proper response will result in abandonment of this application. Extensions of time under 37 CFR 1.136(a) are available. Any reconsideration request should include a cover letter entitled "Renewed Petition Under 37 CFR 1.47(a)." No additional petition fee is required.

Any further correspondence with respect to this matter may be filed electronically via EFS-Web selecting the document description "Petition for review and processing by the PCT Legal Office" or by mail addressed to Mail Stop PCT, Commissioner for Patents, Office of PCT Legal Administration, P.O. Box 1450, Alexandria, Virginia 22313-1450, with the contents of the letter marked to the attention of the Office of PCT Legal Administration.

/Erin P. Thomson/

Erin P. Thomson
Attorney Advisor
PCT Legal Administration

Telephone: 571-272-3292

UNITED STATES PATENT AND TRADEMARK OFFICE

Commissioner for Patents
United States Patent and Trademark Office
P.O. Box 1450
Alexandria, VA 22313-1450
www.uspto.gov

MAILED

MAR 28 2011

PCT LEGAL ADMINISTRATION

SHERIDAN ROSS PC
1560 BROADWAY
SUITE 1200
DENVER CO 80202

In re Application of	:	
STAMP, Kevin, et al.	:	
Application No.: 12/601,220	:	DECISION
PCT No.: PCT/GB2007/004870	:	
Int. Filing Date: 18 December 2007	:	ON PETITION UNDER
Priority Date: 18 December 2006	:	
Docket No.: 7095MH-9	:	37 CFR 1.47(a)
For: IMPROVED AUTOINJECTOR	:	

This is a decision on applicants' Petition Under 37 CFR 1.47(a), filed in the United States Patent and Trademark Office (USPTO) on 26 January 2011.

BACKGROUND

On 29 November 2010, the Office mailed Decision On Petition Under 37 CFR 1.47(a), dismissing applicants' petition without prejudice.

On 26 January 2011, applicants filed a renewed petition under 37 CFR 1.47(a), accompanied by a declaration of the previously non-signing inventor.

DISCUSSION

This petition under 37 CFR 1.47(a) is now moot, as all inventors are cooperating with the filing.

The declaration of Kevin Stamp furnished on 26 January 2011 does not comply with 37 CFR 1.497(a)-(b). It lists three inventors rather than two. Further, the third inventor has the same name as the second inventor. Finally, it is noted that the first page of the declaration does not indicate that further pages are attached and that the declaration when executed by the other inventor was only one page. It appears likely that the second and third pages of the declaration belong to a different application. Applicants are required to return the declaration to the Office as it was executed by the inventor and it must comply with 37 CFR 1.497(a)-(b).

CONCLUSION

For the above reasons, applicant's petition under 37 CFR 1.47(a) is **DISMISSED AS MOOT**.

A proper response must be filed within **TWO (2) MONTHS** from the mail date of this decision. Failure to timely file the proper response will result in abandonment of this application. Extensions of time under 37 CFR 1.136(a) are available.

Any further correspondence with respect to this matter may be filed electronically via EFS-Web selecting the document description "Petition for review and processing by the PCT Legal Office" or by mail addressed to Mail Stop PCT, Commissioner for Patents, Office of PCT Legal Administration, P.O. Box 1450, Alexandria, Virginia 22313-1450, with the contents of the letter marked to the attention of the Office of PCT Legal Administration.

/Erin P. Thomson/

Erin P. Thomson
Attorney Advisor
PCT Legal Administration

Telephone: 571-272-3292

UNITED STATES PATENT AND TRADEMARK OFFICE

Commissioner for Patents
United States Patent and Trademark Office
P.O. Box 1450
Alexandria, VA 22313-1450
www.uspto.gov

MAILED

AUG 02 2011

PCT LEGAL ADMINISTRATION

SHERIDAN ROSS PC
1560 BROADWAY
SUITE 1200
DENVER CO 80202

In re Application of
STAMP, Kevin, et al.
Application No.: 12/601,220
PCT No.: PCT/GB2007/004870
Int. Filing Date: 18 December 2007
Priority Date: 18 December 2006
Docket No.: 7095MH-9
For: IMPROVED AUTOINJECTOR

DECISION

This decision responds to applicants' submission of a declaration of the inventors, filed in the United States Patent and Trademark Office (USPTO) on 27 May 2011.

BACKGROUND

On 28 March 2011, the Office mailed Decision On Petition Under 37 CFR 1.47(a), dismissing applicants' petition as moot, but requesting a new oath or declaration.

On 27 May 2011, applicants filed a new declaration from the previously non-signing inventor.

DISCUSSION

The 27 May 2011 declaration of the inventors complies with 37 CFR 1.497(a)-(b).

CONCLUSION

This application is being referred to the National Phase Processing Branch of the Office of Patent Application Processing for further action consistent with this decision.

/Erin P. Thomson/

Erin P. Thomson
Attorney Advisor
PCT Legal Administration

Telephone: 571-272-3292

3 AUG 2010

UNITED STATES PATENT AND TRADEMARK OFFICE

Commissioner for Patents
United States Patent and Trademark Office
P.O. Box 1450
Alexandria, VA 22313-1450
www.uspto.gov

HONEYWELL/CST
Patent Services
101 Columbia Road
P.O. Box 2245
Morristown NJ 07962-2245

In re Application of	:	DECISION ON
YEN, Peter	:	
Application No.: 12/601,239	:	PETITION UNDER
PCT No.: PCT/AU2008/000710	:	
Int. Filing Date: 20 May 2008	:	37 CFR § 1.47(b)
Priority Date: 21 May 2007	:	
Attorney Docket No.: H0013977-1161.1481101	:	
For: SYSTEMS AND METHODS FOR	:	
MODELING BUILDING RESOURCES	:	

This is a decision on applicant's petition under 37 CFR 1.47(b) filed in the United States Patent and Trademark Office (USPTO) on 26 July 2010. The petition is **DISMISSED** without prejudice.

BACKGROUND

On 20 May 2008, applicant filed international application PCT/AU2008/000710, which designated the US and claimed a priority date of 21 May 2007. A copy of the international application was communicated to the United States Patent and Trademark Office (USPTO) from the International Bureau on 27 November 2008. The thirty-month period for paying the basic national fee in the United States expired at midnight on 23 November 2009 (21 November 2009 being a Saturday).

On 20 November 2009, applicant filed a submission for entry into the national stage in the United States which was accompanied by, *inter alia*, the U.S. Basic National Fee.

On 26 April 2010, the United States Designated/Elected Office (DO/EO/US) mailed a NOTIFICATION OF MISSING REQUIREMENTS UNDER 35 U.S.C. 371 (Form PCT/DO/EO/905) indicating, *inter alia*, that an oath or declaration of inventors in compliance with 37 CFR 1.497(a)-(b) was required.

On 26 July 2010, applicant filed the instant petition under 37 CFR 1.47(b). The petition was accompanied by, *inter alia*, a statement of facts by Lynn Thompson with documents in support thereof, a declaration of inventors, a copy of an "Invention and Non-disclosure Agreement" signed by non-signing inventor Peter Yen, and a statement of facts by Greg Ansems.

DISCUSSION

A petition under 37 CFR 1.47(b) must be accompanied by: (1) the fee under 37 CFR 1.17(g), (2) factual proof that the inventor refuses to execute the application or cannot be reached after diligent effort, (3) a statement of the last known address of the inventor, (4) an oath or declaration by the 37 CFR 1.47(b) applicant on behalf of and as agent for the non-signing inventor, (5) proof that the 37 CFR 1.47(b) applicant has sufficient proprietary interest in the application, and (6) a showing that such action is necessary to preserve the rights of the parties or to prevent irreparable damage.

Items (1), (2), (3), and (6) have been met.

Item (4) has not been met. The declaration of the inventor is not executed by the 37 CFR 1.47(b) applicant on behalf of and as agent for the non-signing inventor Peter Yen.

Item (5) has not been met. Although a copy of an "Invention and Non-disclosure Agreement" signed by non-signing inventor Peter Yen has been provided, Clause 4 of the agreement indicates that the agreement is dependent on certain conditions being met. Attention is directed to MPEP § 409.03 which, regarding employment agreements and agreements to assign, states in part:

> When an inventor has agreed in writing to assign an invention described in an application deposited pursuant to 37 CFR 1.47(b), a copy of that agreement should be submitted. If an agreement to assign is dependent on certain specified conditions being met, it must be established by a statement of facts by someone with first hand knowledge of the circumstances in which those conditions have been met. A typical agreement to assign is an employment agreement where an employee (nonsigning inventor) agrees to assign to his or her employer (37 CFR 1.47(b) applicant) all inventions made during employment. When such an agreement is relied on, it must be established by a statement of a person having firsthand knowledge of the facts that the invention was made by the employee while employed by the 37 CFR 1.47(b) applicant.

The statement of Greg Ansems has been considered. However, the statement does not indicate that the specified conditions were met. Moreover, even if the statement made such indications, it is not clear that Mr. Ansems would have had firsthand knowledge of such facts.

Accordingly, it is not appropriate to accord the national stage application status under 37 CFR 1.47(b) at this time.

CONCLUSION

For the above reasons, applicants' petition under 37 CFR 1.47(b) is **DISMISSED**, without prejudice.

If reconsideration on the merits of this petition is desired, a proper response must be filed within TWO (2) MONTHS from the mail date of this decision. Failure to timely file the proper response will result in abandonment of this application. Any reconsideration request should include a cover letter entitled "Renewed Petition Under 37 CFR 1.47(b)". No additional petition fee is required. Extensions of time may be obtained under 37 CFR 1.136(a).

Any further correspondence with respect to this matter may be filed electronically via EFS-Web selecting the document description "Petition for review and processing by the PCT Legal Office" or by mail addressed to Mail Stop PCT, Commissioner for Patents, Office of PCT Legal Administration, P.O. Box 1450, Alexandria, Virginia 22313-1450, with the contents of the letter marked to the attention of the Office of PCT Legal Administration.

/Daniel Stemmer/

Daniel Stemmer
Legal Examiner
PCT Legal Affairs
Office of Patent Cooperation Treaty
Legal Administration
Telephone: (571) 272-3301

UNITED STATES PATENT AND TRADEMARK OFFICE

Commissioner for Patents
United States Patent and Trademark Office
P.O. Box 1450
Alexandria, VA 22313-1450
www.uspto.gov

MAILED

NOV 23 2010

PCT LEGAL ADMINISTRATION

HONEYWELL/CST
Patent Services
101 Columbia Road
P.O. Box 2245
Morristown NJ 07962-2245

In re Application of	:	DECISION ON
YEN, Peter	:	
Application No.: 12/601,239	:	PETITION UNDER
PCT No.: PCT/AU2008/000710	:	
Int. Filing Date: 20 May 2008	:	37 CFR § 1.47(b)
Priority Date: 21 May 2007	:	
Attorney Docket No.: H0013977-1161.1481101	:	
For: SYSTEMS AND METHODS FOR	:	
MODELING BUILDING RESOURCES	:	

This is a decision on applicant's petition under 37 CFR 1.47(b) filed in the United States Patent and Trademark Office (USPTO) on 17 September 2010. The petition is **DISMISSED** without prejudice.

BACKGROUND

On 20 May 2008, applicant filed international application PCT/AU2008/000710, which designated the US and claimed a priority date of 21 May 2007. A copy of the international application was communicated to the United States Patent and Trademark Office (USPTO) from the International Bureau on 27 November 2008. The thirty-month period for paying the basic national fee in the United States expired at midnight on 23 November 2009 (21 November 2009 being a Saturday).

On 20 November 2009, applicant filed a submission for entry into the national stage in the United States which was accompanied by, *inter alia*, the U.S. Basic National Fee.

On 26 April 2010, the United States Designated/Elected Office (DO/EO/US) mailed a NOTIFICATION OF MISSING REQUIREMENTS UNDER 35 U.S.C. 371 (Form PCT/DO/EO/905) indicating, *inter alia*, that an oath or declaration of inventors in compliance with 37 CFR 1.497(a)-(b) was required.

On 26 July 2010, applicant filed a petition under 37 CFR 1.47(b). The petition was accompanied by, *inter alia*, a statement of facts by Lynn Thompson with documents in support thereof, a declaration of inventors, a copy of an "Invention and Non-disclosure Agreement" signed by non-signing inventor Peter Yen, and a statement of facts by Greg Ansems.

On 03 August 2010, a decision was issued dismissing without prejudice applicant's petition under 37 CFR 1.47(b). Specifically, it was noted that an oath or declaration by the 37 CFR 1.47(b) applicant on behalf of and as agent for the non-signing inventor had not been provided and proof that the 37 CFR 1.47(b) applicant has sufficient proprietary interest in the application had not been provided.

On 17 September 2010, applicant filed the instant renewed petition under 37 CFR 1.47(b) which was accompanied by, *inter alia*, a declaration of facts by David Morrison and a declaration of the inventor by the 37 CFR 1.47(b) applicant on behalf of and as agent for the non-signing inventor.

DISCUSSION

A petition under 37 CFR 1.47(b) must be accompanied by: (1) the fee under 37 CFR 1.17(g), (2) factual proof that the inventor refuses to execute the application or cannot be reached after diligent effort, (3) a statement of the last known address of the inventor, (4) an oath or declaration by the 37 CFR 1.47(b) applicant on behalf of and as agent for the non-signing inventor, (5) proof that the 37 CFR 1.47(b) applicant has sufficient proprietary interest in the application, and (6) a showing that such action is necessary to preserve the rights of the parties or to prevent irreparable damage.

As noted in the decision issued 03 August 2010, items (1), (2), (3), and (6) have been met.

Item (4) has now been met. The declaration of the inventor filed 17 September 2010 is sufficient.

Item (5) has now been met as well. The employment agreement dated 08 August 2002 and provided with the 26 July 2010 submission establishes Peter Yen's obligation to assign inventions made pursuant to that agreement. The statement of facts by Mr. David Morrison establishes that the invention was made pursuant to the terms of the employment agreement.

CONCLUSION

For the above reasons, applicants' renewed petition under 37 CFR 1.47(b) is **GRANTED**.

As provided in 37 CFR 1.47(b), a notice of the filing of this application will be forwarded to non-signing inventor at his last known address of record.

A notice of the filing of the application under 37 CFR 1.47(b) will be published in the Official Gazette.

This application is being forwarded to the National Stage Processing Branch of the Office of PCT Operations to continue national stage processing of the application, including the accordation of a 35 U.S.C. §§371(c)(1), (c)(2), and (c)(4) date of **17 September 2010**.

/Daniel Stemmer/

Daniel Stemmer
Legal Examiner
PCT Legal Affairs
Office of Patent Cooperation Treaty
Legal Administration
Telephone: (571) 272-3301

UNITED STATES PATENT AND TRADEMARK OFFICE

Commissioner for Patents
United States Patent and Trademark Office
P.O. Box 1450
Alexandria, VA 22313-1450
www.uspto.gov

MAILED

NOV 23 2010

PCT LEGAL ADMINISTRATION

Peter Yen
22 Lord Howe Street
Dover Heights
New South Wales 2030
AUSTRALIA

In re Application of
YEN, Peter
Application No.: 12/601,239
PCT No.: PCT/AU2008/000710
Int. Filing Date: 20 May 2008
Priority Date: 21 May 2007
Attorney Docket No.: H0013977-1161.1481101
For: SYSTEMS AND METHODS FOR MODELING BUILDING RESOURCES

Dear Mr. Yen:

You are named as an inventor in the above-captioned United States national stage application, filed under the provisions of 37 CFR 1.47(b) and 35 U.S.C. 116. Should a patent be granted, you will be designated as an inventor.

As a named inventor, you are entitled to inspect any paper in the file wrapper of the application, order copies of all or any part thereof (at a prepaid cost per 37 CFR 1.19) or to make your position of record in the application. Alternatively, you may arrange to do any of the preceding through a registered patent agent or attorney presenting written authorization from you. Joining in the application would entail the filing of an appropriate oath or declaration by you pursuant to 37 CFR 1.63.

/Daniel Stemmer/

Daniel Stemmer
PCT Legal Examiner
PCT Legal Affairs
Office of Patent Cooperation Treaty
Legal Administration
Telephone: (571) 272-3301

HONEYWELL/CST
Patent Services
101 Columbia Road
P.O. Box 2245
Morristown NJ 07962-2245

UNITED STATES PATENT AND TRADEMARK OFFICE

Commissioner for Patents
United States Patent and Trademark Office
P.O. Box 1450
Alexandria, VA 22313-1450
www.uspto.gov

April 9, 2012

Patent No. : 8,120,084 B2
Appl. No. : 12/601,243
Inventor(s) : Blom et al.
Issued : February 21, 2012
Title : **FERRO-ELECTRIC DEVICE AND MODULATABLE INJECTION BARRIER**
Docket No. : **268333**

Re: Request for Certificate of Correction

Consideration has been given your request for the issuance of a certificate of correction for the above-identified patent under the provisions of Rule 1.323.

Assignees' names and addresses (assignment data) printed in a patent, are based *solely* on information supplied in the appropriate space for identifying the assignment data, i.e., item 3 of the Issue Fee Transmittal Form PTOL-85B. Granting of a request under 37 CFR 3.81(b) is required to correct applicant's error providing ***incorrect or erroneous*** assignment data, *before* issuance of a Certificate of Correction under 37 CFR 1.323 *(see Manual of Patent Examining Procedures (M.P.E.P) Chp.1400, sect. 1481).* This procedure is required *at any time after the issue fee is paid*, including after issuance of the patent.

In view of the foregoing, your request, in this mater, is hereby denied.

All petitions for correction of Assignees' names under rule 3.81(b) should:

(A) state that the assignment was submitted for recordation as set forth in 37 CFR 3.11 before issuance of the patent;

(B) include a request for a certificate of correction under 37 CFR 1.323 along with the fee set forth in 37 CFR 1.20(a); (unless fee (currently $100) was previously paid for consideration of request for certificate of correction)

(C) include the processing fee set forth in 37 CFR 1.17(i).

The petition under 37 CFR 3.81(b) should be directed to the following address or facsimile number:

By mail: Mail Stop PETITIONS
Commissioner for Patents
Post Office Box 1450
Alexandria, VA 22313-1450

By hand: Customer Service Window
Mail Stop Petitions
Randolph Building
401 Dulany Street
Alexandria, VA 22314
(Hours of operation are 8:30 a.m. to midnight, Eastern Standard Time, Monday through Friday)

By fax: (571) 273-8300
ATTN: Office of Petitions

EFS-Web (Web-based Electronic Filing System) accessible through the Electronic Business Center (EBC);

Antonio Johnson
For Mary F. Diggs
Decisions & Certificates
of Correction Branch
(571)272-0483

LEYDIG VOIT & MAYER, LTD
TWO PRUDENTIAL PLAZA, SUITE 4900
180 NORTH STETSON AVENUE
CHICAGO IL 60601-6731

UNITED STATES PATENT AND TRADEMARK OFFICE

COMMISSIONER FOR PATENTS
UNITED STATES PATENT AND TRADEMARK OFFICE
P.O. BOX 1450
ALEXANDRIA, VA 22313-1450
www.uspto.gov

MAILED

NOV 03 2010

PCT LEGAL ADMINISTRATION

FSP LLC
P.O. BOX 890
VANCOUVER, WA 98666

In re Application of	:	
FERRERA et al	:	
Application No.: 12/601,258	:	DECISION ON PETITION
Filing Date: November 21, 2009	:	UNDER 37 CFR 1.78(a)(3)
Attorney Docket No.: E5219-07 BIS-US	:	

This is a decision on the petition under 37 CFR 1.78(a)(3), filed August 30, 2008, to accept an unintentionally delayed claim under 35 U.S.C. 120 for the benefit of priority to the prior-filed international application set forth in the amendment filed concurrently with the instant petition.

The petition is **GRANTED**.

The present nonprovisional application was filed after November 29, 2000, and the claim herein for the benefit of priority to the prior-filed nonprovisional application is submitted after expiration of the period specified in 37 CFR 1.78(a)(2)(ii). Therefore, this is a proper petition under 37 CFR 1.78(a)(3).

A petition for acceptance of a late claim for priority under 37 CFR 1.78(a)(3) is only applicable to those applications filed on or after November 29, 2000. Further, the petition is appropriate only after the expiration of the period specified in 37 CFR 1.78(a)(2)(ii). In addition, the petition under 37 CFR 1.78(a)(3) must be accompanied by:

(1) the reference required by 35 U.S.C. 120 and 37 CFR 1.78(a)(2)(i) of the prior-filed application, unless previously submitted;
(2) the surcharge set forth in 37 CFR 1.17(t); and
(3) a statement that the entire delay between the date the claim was due under 37 CFR 1.78(a)(2)(ii) and the date the claim was filed was unintentional. The Director may require additional information where there is a question whether the delay was unintentional.

The petition complies with the requirements for a grantable petition under 37 CFR 1.78(a)(3) in that (1) a reference to the prior-filed nonprovisional application has been included in an amendment to the first sentence of the specification following the title, as provided by 37 CFR 1.78(a)(2)(iii); (2) the surcharge fee required by 37 CFR 1.17(t) has been submitted; and (3) the petition contains a proper statement of unintentional delay. Accordingly, having found that the

instant petition for acceptance of an unintentionally delayed claim for the benefit of priority under 35 U.S.C. 120 to the prior-filed nonprovisional application satisfies the conditions of 37 CFR 1.78(a)(3), the petition is granted.

The granting of the petition to accept the delayed benefit claim to the prior-filed application under 37 CFR 1.78(a)(3) should not be construed as meaning that this application is entitled to the benefit of the prior-filed application. In order for this application to be entitled to the benefit of the prior-filed application, all other requirements under 35 U.S.C. 120 and 37 CFR 1.78(a)(1) and (a)(2) must be met. Similarly, the fact that any Filing Receipt includes the prior-filed application should not be construed as meaning that applicant is entitled to the claim for benefit of priority to the prior-filed application noted thereon. Accordingly, the examiner will, in due course, consider this benefit claim and determine whether this application is entitled to the benefit of the earlier filing date.

Any inquiries concerning this decision may be directed to Bryan Lin at (571)272-3303. All other inquiries concerning either the examination procedures or status of the application should be directed to the Technology Center.

This matter is being referred to Technology Center Art Unit 2839 for appropriate action, including consideration by the examiner of applicant's entitlement to claim benefit of priority under 35 U.S.C. 120 to the prior-filed nonprovisional application.

Bryan Lin

Bryan Lin
Legal Examiner
Office of PCT Legal Administration

UNITED STATES PATENT AND TRADEMARK OFFICE

Commissioner for Patents
United States Patent and Trademark Office
P.O. Box 1450
Alexandria, VA 22313-1450
www.uspto.gov

VICTORIA DONNELLY
P.O. BOX 24001
HAZELDEAN RPO
KANATA ON K2M 2C3 CA CANADA

MAILED
JUL 05 2011
OFFICE OF PETITIONS

Applicants: Coulombe, et al.
Appl. No.: 12/601,267
International Filing Date: June 19, 2008
Title: BUFFER-BASED RATE CONTROL IN VIDEO CODING
Attorney Docket: VT-039-US
Pub. No.: US 2010/0195713 A1
Pub. Date: August 5, 2010.

This is a decision on the request for a corrected patent application publication under 37 CFR 1.221(b), received on August 25, 2010, for the above-identified application.

Applicant requests that the application be republished because the patent application publication contains a material error in Figure 2, as it is corrupted.

37 CFR 1.221 (b) is applicable: "only when the Office makes a material mistake which is apparent from Office records.... Any request for a corrected publication or revised patent application publication other than provided as provided in paragraph (a) of this section must be filed within two months from the date of the patent application publication. **This period is not extendable.**" A material mistake must affect the public's ability to appreciate the technical disclosure of the patent application publication, to determine the scope of the patent application publication, or to determine the scope of the provisional rights that an applicant may seek to enforce upon issuance of a patent. [1]

The error noted by requester with respect printing a "corrupted" Figure 2 is not a material Office errors under 37 CFR 1.221. The error is due to the fact that applicant submitted a "corrupted" copy of Figure 2 with the application.

The applicant is advised that a "request for republication of an application previously published" may be filed under 37 CFR 1.221(a). Such a request for republication "must include a copy of the application compliance with the Office's electronic filing system requirements and be accompanied by the publication fee set forth in § 1.18(d) and the processing fee set forth in

[1] Changes to Implement Eighteen-Month Publication of Patent Applications, 65 FR 57023, 57038 (Sept. 20, 2000), 1239, Off. Gaz. Pat. Office Notices 63, 75 (Oct. 10, 2000) (final rule).

§ 1.17(i)." If the request for republication does not comply with the electronic filing system requirements, the republication will not take place and the publication fee set forth in § 1.18(d) will be refunded. The processing fee will be retained.

A guide for filing a request for a Pre-Grant Publication, such as a request for republication, may be found on the link below:

http://www.uspto.gov/patents/process/file/efs/guidance/index.jsp

http://www.uspto.gov/ebc/portal/efs/pgpub_quickstart.pdf

Any request for republication under 37 CFR 1.221(a), must be submitted via the EFS system, as a "Pre-Grant Publication" and questions or request for reconsideration of the decision, should be addressed as follows:

Inquiries relating to this matter may be directed to Mark Polutta at (571) 272-7709.

M Polutta

Mark Polutta
Senior Legal Advisor
Office of Patent Legal Administration
Office of the Deputy Commissioner
for Patent Examination Policy

UNITED STATES PATENT AND TRADEMARK OFFICE

Commissioner for Patents
United States Patent and Trademark Office
P.O. Box 1450
Alexandria, VA 22313-1450
www.uspto.gov

MAILED

DEC 06 2010

PCT LEGAL ADMINISTRATION

O'BRIEN JONES, PLLC
1951 Kidwell Drive
Suite 550 B
Tysons Corner VA 22182

In re Application of	:	
HENCK, Jan-olav, et al.	:	
Application No.: 12/601,270	:	
PCT App. No.: PCT/US2008/064362	:	
Int'l Filing Date: 21 May 2008	:	DECISION
Priority Date: 22 May 2007	:	
Attorney Docket No.: 1005.0014-00000	:	
For: PREPARATION OF MANNITOL	:	
MODIFICATION III	:	

This is in response to attorneys' request to withdraw as attorneys of record, filed 17 September 2010, in regard to 12/601,270. The Request is **DISMISSED AS MOOT**.

Counsel was never appointed in the above application. As such, counsel cannot withdraw. Further, Michelle E. O'Brien is not authorized to change the correspondence address in this application. As a courtesy, this decision is being copied to the first named inventor in the application.

/Erin P. Thomson/

Erin P. Thomson
Attorney Advisor
PCT Legal Administration

Telephone: 571-272-3292

cc: Jan-olav Henck
3370 Whirlaway Court
West Lafayette, IN 47906

UNITED STATES PATENT AND TRADEMARK OFFICE

UNITED STATES DEPARTMENT OF COMMERCE
United States Patent and Trademark Office
Address: COMMISSIONER FOR PATENTS
P.O. Box 1450
Alexandria, Virginia 22313-1450
www.uspto.gov

APPLICATION NO.	FILING DATE	FIRST NAMED INVENTOR	ATTORNEY DOCKET NO.	CONFIRMATION NO.
12/601,313	11/23/2009	Hideyasu Fujioka	OLI-089	6741

32628 7590 12/14/2011
KANESAKA BERNER AND PARTNERS LLP
1700 DIAGONAL RD
SUITE 310
ALEXANDRIA, VA 22314-2848

EXAMINER

ART UNIT	PAPER NUMBER
2857	

MAIL DATE	DELIVERY MODE
12/14/2011	PAPER

Please find below and/or attached an Office communication concerning this application or proceeding.

The time period for reply, if any, is set in the attached communication.

UNITED STATES PATENT AND TRADEMARK OFFICE

Commissioner for Patents
United States Patent and Trademark Office
P.O. Box 1450
Alexandria, VA 22313-1450
www.uspto.gov

KANESAKA BERNER AND PARTNERS LLP
1700 DIAGONAL RD
SUITE 310
ALEXANDRIA VA 22314-2848

DEC 14 2011

In re Application of	:	
FUJIOKA et al.	:	DECISION ON PETITION
Application No. 12/601,313	:	TO MAKE SPECIAL UNDER
Filed: November 23, 2009	:	THE GREEN TECHNOLOGY
Attorney Docket No. OLI-089	:	PILOT PROGRAM

This is a decision on the petition under 37 CFR 1.102, filed on January 1, 2010, to make the above-identified application special under the pilot program for applications pertaining to Green Technologies as set forth 74 Federal Register Notice 64666 (December 8, 2009) and amended by 75 Federal Register Notice 28554 (May 21, 2010) and 75 Federal Register Notice 69049 (November 10, 2010).

The petition is **GRANTED**.

A grantable petition to make an application special under 37 CFR 1.102 and the pilot program as set forth in 74 FR 64666 must be directed to a nonprovisional application filed under 35 USC 111(a) or be a national stage entry under 35 USC 371, exclusive of any reissue applications.

In order to qualify for special status, the following requirements must be met. 1) The application must have no more than 3 independent claims and no more than 20 total claims. 2) The application must not contain any multiple dependent claims. 3) The petition must state the basis for seeking special status, i.e., the claimed invention either: A) materially enhances the quality of the environment or B) materially contributes to: i) the discovery or development of renewable energy resources, ii) the more efficient utilization and conservation of energy resources, or iii) greenhouse gas emission reduction. 4) If the disclosure is not clear on its face that the claimed invention materially contributes under category (A) or (B), the petition must be accompanied by a statement by the applicant, assignee, or an attorney/agent registered to practice before the Office explaining how the materiality standard is met. 5) A statement that applicant will agree to make an election without traverse in a telephonic interview if a restriction requirement is made by the examiner. 6) The petition to make special must be filed electronically. 7) The petition must be filed at least one day prior to the date that a first Office Action appears in the Patent Application Information Retrieval (PAIR) system. 8) The petition must be accompanied by a request for early publication in compliance with 37 CFR 1.219 and include the publication fee as set forth in 37 CFR 1.18(d).

The requirement for a fee for consideration of the petition to make special for applications pertaining to Green Technologies has been waived.

The instant petition complies with items 1 – 8 above. Accordingly, the above-identified application has been accorded "special" status.

Telephone inquires concerning this decision should be directed to Colleen Dunn at 571-272-1170.

The application is being forwarded to the appropriate Technology Center Art Unit for action on the merits commensurate with this decision.

/Colleen Dunn/

Colleen Dunn
TQAS, TC 2800

UNITED STATES PATENT AND TRADEMARK OFFICE

UNITED STATES DEPARTMENT OF COMMERCE
United States Patent and Trademark Office
Address: COMMISSIONER FOR PATENTS
P.O. Box 1450
Alexandria, Virginia 22313-1450
www.uspto.gov

APPLICATION NO.	FILING DATE	FIRST NAMED INVENTOR	ATTORNEY DOCKET NO.	CONFIRMATION NO.
12/601,359	11/23/2009	Akira Yasugi	OLI-091	7038

32628 7590 01/12/2011
KANESAKA BERNER AND PARTNERS LLP
1700 DIAGONAL RD
SUITE 310
ALEXANDRIA, VA 22314-2848

EXAMINER

ART UNIT	PAPER NUMBER
2121	

MAIL DATE	DELIVERY MODE
01/12/2011	PAPER

Please find below and/or attached an Office communication concerning this application or proceeding.

The time period for reply, if any, is set in the attached communication.

UNITED STATES PATENT AND TRADEMARK OFFICE

Commissioner for Patents
United States Patent and Trademark Office
P.O. Box 1450
Alexandria, VA 22313-1450
www.uspto.gov

KANESAKA BERNER AND PARTNERS LLP
1700 DIAGONAL RD
SUITE 310
ALEXANDRIA VA 22314-2848

In re Application of	:	
YASUGI, AKIRA	:	DECISION ON PETITION
Application No. 12/601,359	:	TO MAKE SPECIAL UNDER
Filed: Nov. 23, 2009	:	THE GREEN TECHNOLOGY
Attorney Docket No. PLI-91	:	PILOT PROGRAM

This is a decision on the renewed petition under 37 CFR 1.102, filed Jan. 19, 2010, to make the above-identified application special under the pilot program for applications pertaining to Green Technologies as set forth in 74 Federal Register Notice 64666 (December 8, 2009) and amended by 75 Federal Register Notice 28554 (May 21, 2010) and 75 Federal Register Notice 69049 (November 10, 2010).

The petition is **granted.**

If reconsideration of this decision is desired, a petition for reconsideration must be filed within ONE (1) MONTH OR THIRTY (30) DAYS from the mail date of this decision, whichever is longer. No extension of this time limit can be granted under 37 CFR 1.136(a) or (b). The petition for reconsideration should include an exhaustive attempt to provide the lacking item(s) noted below, since, after a decision on the petition for reconsideration, no further reconsideration or review of the matter will be undertaken by the Director.

A grantable petition to make an application special under 37 CFR 1.102 and the pilot program as set forth in 74 FR 64666 must be directed to a nonprovisional application filed under 35 USC 111(a) or be a national stage entry under 35 USC 371, exclusive of any reissue applications.

In order to qualify for special status, the following requirements must be met. 1) The application must have no more than 3 independent claims and no more than 20 total claims. 2) The application must not contain any multiple dependent claims. 3) The petition must state the basis for seeking special status, i.e., the claimed invention either: A) materially enhances the quality of the environment or B) materially contributes to: i) the discovery or development of renewable energy resources, ii) the more efficient utilization and conservation of energy resources, or iii)

greenhouse gas emission reduction. 4) If the disclosure is not clear on its face that the claimed invention materially contributes under category (A) or (B), the petition must be accompanied by a statement by the applicant, assignee, or an attorney/agent registered to practice before the Office explaining how the materiality standard is met. 5) A statement that applicant will agree to make an election without traverse in a telephonic interview if a restriction requirement is made by the examiner. 6) The petition to make special must be filed electronically. 7) The petition must be filed at least one day prior to the date that a first Office Action appears in the Patent Application Information Retrieval (PAIR) system. 8) The petition must be accompanied by a request for early publication in compliance with 37 CFR 1.219 and include the publication fee as set forth in 37 CFR 1.18(d).

The requirement for a fee for consideration of the petition to make special for applications pertaining to Green Technologies has been waived.

The instant petition complies with items 1 – 8 above. Accordingly, the above-identified application has been accorded "special" status.

Telephone inquires concerning this decision should be directed to Henry C. Yuen at 571-272-4856.

This application is currently undergoing pre-examination processing. Upon completion, the application will be forwarded to a Technology Center for classification and docketing to an examiner for action on the merits commensurate with this decision.

/Henry C. Yuen/

Henry C. Yuen
Quality Assurance Specialist
Technology Center TC 3700

UNITED STATES PATENT AND TRADEMARK OFFICE

UNITED STATES DEPARTMENT OF COMMERCE
United States Patent and Trademark Office
Address: COMMISSIONER FOR PATENTS
P.O. Box 1450
Alexandria, Virginia 22313-1450
www.uspto.gov

APPLICATION NO.	FILING DATE	FIRST NAMED INVENTOR	ATTORNEY DOCKET NO.	CONFIRMATION NO.
12/601,438	02/05/2010	Yasuyuki Iida	77792/121	7466

23838 7590 10/07/2011
KENYON & KENYON LLP
1500 K STREET N.W.
SUITE 700
WASHINGTON, DC 20005

EXAMINER
CASTILLO, KEVIN CHARLES

ART UNIT	PAPER NUMBER
3781	

MAIL DATE	DELIVERY MODE
10/07/2011	PAPER

Please find below and/or attached an Office communication concerning this application or proceeding.

The time period for reply, if any, is set in the attached communication.

UNITED STATES PATENT AND TRADEMARK OFFICE

Commissioner for Patents
United States Patent and Trademark Office
P.O. Box 1450
Alexandria, VA 22313-1450
www.uspto.gov

KENYON & KENYON LLP
1500 K STREET N.W.
SUITE 700
WASHINGTON DC 20005

In re Application of	:	
IIDA, YASUYUKI	:	DECISION ON REQUEST TO
Application No. 12/601,438	:	PARTICIPATE IN PATENT
Filed: Nov. 23, 2009	:	PCT/PROSECUTION HIGHWAY
Attorney Docket No. 77792/121	:	PROGRAM AND PETITION
For: TANK	:	37 CFR 1.102(a)

This is a decision on the request to participate in the Patent Prosecution Highway (PPH) program and the petition under 37 CFR 1.102(a), filed Oct. 5, 2011 to make the above-identified application special.

The request and petition are dismissed.

A grantable request to participate in the PPH pilot program and petition to make special require:

(1) The U.S. application must validly claim priority under 35 U.S.C. 119(a) to one or more applications filed in the JPO;
(2) Applicant must submit a copy of the allowable/patentable claim(s) from the JPO/PCT application(s) along with an English translation thereof and a statement that the English translation is accurate;
(3) All the claims in the U.S. application must sufficiently correspond or be amended to sufficiently correspond to the allowable/patentable claim(s) in the JPO application(s);
(4) Examination of the U.S. application has not begun;
(5) Applicant must submit a copy of all the office actions from each of the JPO/PCT application(s) containing the allowable/patentable claim(s) along with an English translation thereof and a statement that the English translation is accurate; and
(6) Applicant must submit an IDS listing the documents cited by the JPO examiner in the JPO office action along with copies of documents except U.S. patents or U.S. patent application publications.

The request to participate in the PPH program and petition met all conditions except Item #3

The request to participate in the PPH pilot program and petition does not show JPO allowed claims 1-8 correspond with the current pending claims 2-5 and 7-13 and 15-19. Currently, this application contains claims 2-5 and 7-13 and 15-19 as filed on Nov. 23, 2009. For example, the scope of the newly added/amended/modified independent claim 2 was clearly not allowed by the JPO examiner. In order to grant the PPH Request in this case, it is suggested that the applicant amends the US claims to correspond to the JPO allowed claims 1-8.

Applicant is encouraged to cite and submit all relevant prior art references, if any, to facilitate examination in this application.

Applicant is given a time period of **ONE MONTH or THIRTY DAYS**, whichever is longer, from the mailing date of this decision to correct the deficiencies. **NO EXTENSION OF TIME UNDER 37 CFR 1.136 IS PERMITTED.** If the deficiencies are not corrected with the time period given, the application will await action on the merits for claims 1-6 in its regular turn.

Response must be filed via EFS-Web. Telephone inquiries concerning this decision should be directed to Henry C. Yuen, at 571-272-4856.

/Henry C. Yuen/

Henry C. Yuen
Special Programs Examiner
Technology Center 3700
Tel: 571-272-4856

UNITED STATES PATENT AND TRADEMARK OFFICE

COMMISSIONER FOR PATENTS
UNITED STATES PATENT AND TRADEMARK OFFICE
P.O. BOX 1450
ALEXANDRIA, VA 22313-1450
www.uspto.gov

VENABLE LLP
P.O. BOX 34385
WASHINGTON, DC 20043-9998

MAILED
MAY 04 2011
OFFICE OF PETITIONS

Applicants: Schroeder, et al.
Appl. No.: 12/601,479
International Filing Date: May 20, 2008
Title: DIELECTRICITY MEASUREMENT DEVICE
Attorney Docket: 47588-281327
Pub. No.: US 2010/0156439 A1
Pub. Date: June 24, 2010

This is a decision on the request for a corrected patent application publication under 37 CFR 1.221(b), received on July 27, 2010, for the above-identified application.

The request is granted.

The application was being forwarded to the Office of PCT Legal Administration for review of the International Filing Date.

On March 17, 2010, a Filing Receipt was mail by the Office, which incorrectly listed the date for the International application and the priority date. To avoid this type of problem in the future, applicant's representative should correct the error and make a request for a corrected filing receipt prior to export of the application to the publisher and publication of the application.

The corrected patent application publication will be published in due course, unless the patent issues before the application is republished.

Inquiries relating to this matter may be directed to Mark Polutta at (571) 272-7709.

M. O. P

Mark Polutta
Senior Legal Advisor
Office of Patent Legal Administration
Office of the Deputy Commissioner
for Patent Examination Policy

UNITED STATES PATENT AND TRADEMARK OFFICE

Commissioner for Patents
United States Patent and Trademark Office
P.O. Box 1450
Alexandria, VA 22313-1450
www.uspto.gov

CATERPILLAR/FINNEGAN, HENDERSON, L.L.P.
901 New York Avenue, NW
WASHINGTON DC 20001-4413

MAILED
MAY 3 1 2011
OFFICE OF PETITIONS

In re Application of	:	
David John Morrow et al.	:	
Application No. 12/601,499	:	ON PETITION
Filed: June 7, 2010	:	
Attorney Docket No. 08350.7047	:	

This is a decision on the petition under 37 CFR 1.182, filed May 2, 2011, to change the order of the names of the inventors.

The petition is **GRANTED**.

The order of the names of the inventors will be changed as follows:

1. David John Morrow
2. Keith David Robert Chambers
3. David John McGowan
4. Peter Thomas Alexander Gordon
5. Paresh Rameshchandra Desai
6. Stephen Francis Hill

Our records have been updated and a corrected Filing Receipt, which sets forth the changes as requested. A copy will be attached to this decision.

This application is being forwarded to Technology Center 3663.

Telephone inquiries regarding this decision should be directed to the Kimberly Inabinet at (571) 272-4618.

/Carl Friedman/
Carl Friedman
Petitions Examiner
Office of Petitions

UNITED STATES PATENT AND TRADEMARK OFFICE

UNITED STATES DEPARTMENT OF COMMERCE
United States Patent and Trademark Office
Address: COMMISSIONER FOR PATENTS
P.O. Box 1450
Alexandria, Virginia 22313-1450
www.uspto.gov

APPLICATION NUMBER	FILING or 371(c) DATE	GRP ART UNIT	FIL FEE REC'D	ATTY.DOCKET.NO	TOT CLAIMS	IND CLAIMS
12/601,499	06/07/2010	3663	780	08350.7047	20	3

CONFIRMATION NO. 7961

CORRECTED FILING RECEIPT

58982
CATERPILLAR/FINNEGAN, HENDERSON, L.L.P.
901 New York Avenue, NW
WASHINGTON, DC 20001-4413

OC000000047967601

Date Mailed: 05/31/2011

Receipt is acknowledged of this non-provisional patent application. The application will be taken up for examination in due course. Applicant will be notified as to the results of the examination. Any correspondence concerning the application must include the following identification information: the U.S. APPLICATION NUMBER, FILING DATE, NAME OF APPLICANT, and TITLE OF INVENTION. Fees transmitted by check or draft are subject to collection. Please verify the accuracy of the data presented on this receipt. **If an error is noted on this Filing Receipt, please submit a written request for a Filing Receipt Correction. Please provide a copy of this Filing Receipt with the changes noted thereon. If you received a "Notice to File Missing Parts" for this application, please submit any corrections to this Filing Receipt with your reply to the Notice. When the USPTO processes the reply to the Notice, the USPTO will generate another Filing Receipt incorporating the requested corrections**

Applicant(s)

David John Morrow, County Antrim, UNITED KINGDOM;
Keith David Robert Chambers, County Tyrone, UNITED KINGDOM;
David John McGowan, County Antrim, UNITED KINGDOM;
Peter Thomas Alexander Gordon, County Antrim, UNITED KINGDOM;
Paresh Rameshchandra Desai, Cambridgeshire, UNITED KINGDOM;
Stephen Francis Hill, Peoria, IL;

Power of Attorney: The patent practitioners associated with Customer Number 58982

Domestic Priority data as claimed by applicant

This application is a 371 of PCT/US07/12804 05/31/2007

Foreign Applications (You may be eligible to benefit from the **Patent Prosecution Highway** program at the USPTO. Please see http://www.uspto.gov for more information.)

If Required, Foreign Filing License Granted: 06/11/2010

The country code and number of your priority application, to be used for filing abroad under the Paris Convention, is **US 12/601,499**

Projected Publication Date: Not Applicable

Non-Publication Request: No

Early Publication Request: No

Title

GEN-SET CONTROL SYSTEM HAVING PROACTIVE LOAD RELIEF

Preliminary Class

701

PROTECTING YOUR INVENTION OUTSIDE THE UNITED STATES

Since the rights granted by a U.S. patent extend only throughout the territory of the United States and have no effect in a foreign country, an inventor who wishes patent protection in another country must apply for a patent in a specific country or in regional patent offices. Applicants may wish to consider the filing of an international application under the Patent Cooperation Treaty (PCT). An international (PCT) application generally has the same effect as a regular national patent application in each PCT-member country. The PCT process **simplifies** the filing of patent applications on the same invention in member countries, but **does not result** in a grant of "an international patent" and does not eliminate the need of applicants to file additional documents and fees in countries where patent protection is desired.

Almost every country has its own patent law, and a person desiring a patent in a particular country must make an application for patent in that country in accordance with its particular laws. Since the laws of many countries differ in various respects from the patent law of the United States, applicants are advised to seek guidance from specific foreign countries to ensure that patent rights are not lost prematurely.

Applicants also are advised that in the case of inventions made in the United States, the Director of the USPTO must issue a license before applicants can apply for a patent in a foreign country. The filing of a U.S. patent application serves as a request for a foreign filing license. The application's filing receipt contains further information and guidance as to the status of applicant's license for foreign filing.

Applicants may wish to consult the USPTO booklet, "General Information Concerning Patents" (specifically, the section entitled "Treaties and Foreign Patents") for more information on timeframes and deadlines for filing foreign patent applications. The guide is available either by contacting the USPTO Contact Center at 800-786-9199, or it can be viewed on the USPTO website at http://www.uspto.gov/web/offices/pac/doc/general/index.html.

For information on preventing theft of your intellectual property (patents, trademarks and copyrights), you may wish to consult the U.S. Government website, http://www.stopfakes.gov. Part of a Department of Commerce initiative, this website includes self-help "toolkits" giving innovators guidance on how to protect intellectual property in specific countries such as China, Korea and Mexico. For questions regarding patent enforcement issues, applicants may call the U.S. Government hotline at 1-866-999-HALT (1-866-999-4158).

LICENSE FOR FOREIGN FILING UNDER

Title 35, United States Code, Section 184

Title 37, Code of Federal Regulations, 5.11 & 5.15

GRANTED

The applicant has been granted a license under 35 U.S.C. 184, if the phrase "IF REQUIRED, FOREIGN FILING LICENSE GRANTED" followed by a date appears on this form. Such licenses are issued in all applications where the conditions for issuance of a license have been met, regardless of whether or not a license may be required as

set forth in 37 CFR 5.15. The scope and limitations of this license are set forth in 37 CFR 5.15(a) unless an earlier license has been issued under 37 CFR 5.15(b). The license is subject to revocation upon written notification. The date indicated is the effective date of the license, unless an earlier license of similar scope has been granted under 37 CFR 5.13 or 5.14.

This license is to be retained by the licensee and may be used at any time on or after the effective date thereof unless it is revoked. This license is automatically transferred to any related applications(s) filed under 37 CFR 1.53(d). This license is not retroactive.

The grant of a license does not in any way lessen the responsibility of a licensee for the security of the subject matter as imposed by any Government contract or the provisions of existing laws relating to espionage and the national security or the export of technical data. Licensees should apprise themselves of current regulations especially with respect to certain countries, of other agencies, particularly the Office of Defense Trade Controls, Department of State (with respect to Arms, Munitions and Implements of War (22 CFR 121-128)); the Bureau of Industry and Security, Department of Commerce (15 CFR parts 730-774); the Office of Foreign AssetsControl, Department of Treasury (31 CFR Parts 500+) and the Department of Energy.

NOT GRANTED

No license under 35 U.S.C. 184 has been granted at this time, if the phrase "IF REQUIRED, FOREIGN FILING LICENSE GRANTED" DOES NOT appear on this form. Applicant may still petition for a license under 37 CFR 5.12, if a license is desired before the expiration of 6 months from the filing date of the application. If 6 months has lapsed from the filing date of this application and the licensee has not received any indication of a secrecy order under 35 U.S.C. 181, the licensee may foreign file the application pursuant to 37 CFR 5.15(b).

UNITED STATES PATENT AND TRADEMARK OFFICE

Commissioner for Patents
United States Patent and Trademark Office
P.O. Box 1450
Alexandria, VA 22313-1450
www.uspto.gov

K&L Gates LLP
1900 MAIN STREET, SUITE 600
IRVINE CA 92614-7319

MAILED

MAR 16 2011

PCT LEGAL ADMINISTRATION

In re Application of	:	
NEURATH, et al.	:	
U.S. Application No.: 12/601,517	:	DECISION ON REQUEST
PCT No.: PCT/US2008/064737	:	
Int. Filing Date: 23 May 2008	:	UNDER 37 CFR 1.48(b)
Priority Date: 24 May 2007	:	
Attorney Docket No.: 1958427.00015	:	AND PETITION UNDER
For: RAPIDLY DISPERSIBLE VAGINAL TABLET	:	
THAT PROVIDES A BIOADHESIVE GEL	:	37 CFR 1.182

This decision is in response to applicant's response to decision on request under 37 CFR 1.48(b) and petition under 37 CFR 1.182 filed 24 August 2010 in the United States Patent and Trademark Office (USPTO).

BACKGROUND

On 20 July 2010, applicant was mailed a decision holding applicant's petitions under 37 CFR 1.48(b) and 37 CFR 1.182 in abeyance pending the filing of a declaration of the inventors listed on the published international application.

On 24 August 2010, applicant filed the response discussed herein. The response includes a declaration signed by inventor Shibo Jiang.

DISCUSSION

A review of the filed papers finds that the filed declaration is in compliance with 37 CFR 1.497(a)-(b). This application will be forwarded to the Office of PCT Operations, National Stage processing for the preparation and mailing of a "Notice of Acceptance" (Form PCT/DO/EO/903). At this time it is not possible for the Office of PCT Legal Administration to grant applicant's petition under 37 CFR 1.182 to correct the order of the names in the application to read: "Alexander Robert Neurath, Nathan Strick, and Alan Stone" as Shibo Jiang remains an inventor in the application. After the Form PCT/DO/EO/903 is mailed the application will be forwarded to the appropriate technology center for examination. At that time the examiner of record will rule on the petition under 37 CFR1.48(b) to remove inventor Jiang. Should the examiner grant the petition, applicant can re-file the petition under 37 CFR 1.182 to correct the order of the names of the inventors. An additional petition fee is not required.

CONCLUSION

For the reasons detailed above, applicant's petition under 37 CFR 1.182 is **DISMISSED without prejudice**.

The application has an international filing date of 23 May 2008 under 35 U.S.C. 363, and will be given a date of **24 August 2010** under 35 U.S.C. 371(c)(1), (c)(2) and (c)(4).

This application is being returned to the DO/EO/US for processing in accordance with this decision.

Derek A. Putonen
Attorney Advisor
Office of PCT Legal Administration
Tel: (571) 272-3294

UNITED STATES PATENT AND TRADEMARK OFFICE

Commissioner for Patents
United States Patent and Trademark Office
P.O. Box 1450
Alexandria, VA 22313-1450
www.uspto.gov

MOORE & VAN ALLEN PLLC
P.O. BOX 13706
RESEARCH TRIANGLE PARK NC 27709

MAILED

NOV 01 2011

OFFICE OF PETITIONS

Applicant: Strachan, et al
Appl. No.: 12/601,548
International Filing Date: May 27, 2008
Title: EXTENSION SENSING ACTUATOR
Attorney Docket: 013314-000026
Pub. No.: US 20110041610 A1
Pub. Date: February 24, 2011

This is a decision on the request for a corrected patent application publication under 37 CFR 1.221(b), received on April 25, 2011(April 24, 2011 being a Sunday), for the above-identified application.

The request is DISMISSED.

Applicant requests that the application be republished because the patent application publication contains an error in claim 30.

The error noted by requestor in claim 30 may be an Office mistake, but it is not a material Office error under 37 CFR 1.221(b). The mistake is a minor typographical error and it does not affect the public's ability to appreciate the technical disclosure of the patent application publication, or determine the scope of the patent application publication or determine the scope of the provisional rights that an applicant may seek to enforce upon issuance of a patent. See MPEP 1130 B.

The applicant is advised that a "request for republication of an application previously published" may be filed under 37 CFR 1.221 (a). Such a request for republication "must include a copy of the application compliance with the Office's electronic filing system requirements and be accompanied by the publication fee set forth in § 1.18 (d) and the processing fee set forth in § 1.17 (i)." If the request for republication does not comply with the electronic filing system requirements, the republication will not take place and the publication fee set forth in § 1.18 (d) will be refunded. The processing fee will be retained.

A guide for filing a request for a Pre-Grant Publication, such as a request for republication, may be found on the link below:

http://www.uspto.gov/patents/process/file/efs/guidance/index.jsp

http://www.uspto.gov/ebc/portal/efs/pgpub_quickstart.pdf

Any request for republication under 37 CFR 1.221(a), must be submitted via the EFS system, as a "Pre-Grant Publication".

Inquiries relating to this matter may be directed to Karen Creasy at (571) 272-3208.

/Christopher Bottorff/

Christopher Bottorff
Petitions Examiner
Office of Petitions

UNITED STATES PATENT AND TRADEMARK OFFICE

UNITED STATES DEPARTMENT OF COMMERCE
United States Patent and Trademark Office
Address: COMMISSIONER FOR PATENTS
P.O. Box 1450
Alexandria, Virginia 22313-1450
www.uspto.gov

APPLICATION NO.	FILING DATE	FIRST NAMED INVENTOR	ATTORNEY DOCKET NO.	CONFIRMATION NO.
12/601,565	11/24/2009	Akira Yasugi	OLI-090	8545

32628 7590 01/12/2011
KANESAKA BERNER AND PARTNERS LLP
1700 DIAGONAL RD
SUITE 310
ALEXANDRIA, VA 22314-2848

EXAMINER

ART UNIT	PAPER NUMBER

MAIL DATE	DELIVERY MODE
01/12/2011	PAPER

Please find below and/or attached an Office communication concerning this application or proceeding.

The time period for reply, if any, is set in the attached communication.

UNITED STATES PATENT AND TRADEMARK OFFICE

Commissioner for Patents
United States Patent and Trademark Office
P.O. Box 1450
Alexandria, VA 22313-1450
www.uspto.gov

KANESAKA BERNER AND PARTNERS LLP
1700 DIAGONAL RD
SUITE 310
ALEXANDRIA VA 22314-2848

In re Application of	:	
YASUGI, AKIRA	:	DECISION ON PETITION
Application No. 12/601,565	:	TO MAKE SPECIAL UNDER
Filed: Nov. 24, 2009	:	THE GREEN TECHNOLOGY
Attorney Docket No. OLI-090	:	PILOT PROGRAM

This is a decision on the renewed petition under 37 CFR 1.102, filed Jan. 22, 2010, to make the above-identified application special under the pilot program for applications pertaining to Green Technologies as set forth in 74 Federal Register Notice 64666 (December 8, 2009) and amended by 75 Federal Register Notice 28554 (May 21, 2010) and 75 Federal Register Notice 69049 (November 10, 2010).

The petition is **granted.**

If reconsideration of this decision is desired, a petition for reconsideration must be filed within ONE (1) MONTH OR THIRTY (30) DAYS from the mail date of this decision, whichever is longer. No extension of this time limit can be granted under 37 CFR 1.136(a) or (b). The petition for reconsideration should include an exhaustive attempt to provide the lacking item(s) noted below, since, after a decision on the petition for reconsideration, no further reconsideration or review of the matter will be undertaken by the Director.

A grantable petition to make an application special under 37 CFR 1.102 and the pilot program as set forth in 74 FR 64666 must be directed to a nonprovisional application filed under 35 USC 111(a) or be a national stage entry under 35 USC 371, exclusive of any reissue applications.

In order to qualify for special status, the following requirements must be met. 1) The application must have no more than 3 independent claims and no more than 20 total claims. 2) The application must not contain any multiple dependent claims. 3) The petition must state the basis for seeking special status, i.e., the claimed invention either: A) materially enhances the quality of the environment or B) materially contributes to: i) the discovery or development of renewable energy resources, ii) the more efficient utilization and conservation of energy resources, or iii) greenhouse gas emission reduction. 4) If the disclosure is not clear on its face that the claimed

invention materially contributes under category (A) or (B), the petition must be accompanied by a statement by the applicant, assignee, or an attorney/agent registered to practice before the Office explaining how the materiality standard is met. 5) A statement that applicant will agree to make an election without traverse in a telephonic interview if a restriction requirement is made by the examiner. 6) The petition to make special must be filed electronically. 7) The petition must be filed at least one day prior to the date that a first Office Action appears in the Patent Application Information Retrieval (PAIR) system. 8) The petition must be accompanied by a request for early publication in compliance with 37 CFR 1.219 and include the publication fee as set forth in 37 CFR 1.18(d).

The requirement for a fee for consideration of the petition to make special for applications pertaining to Green Technologies has been waived.

The instant petition complies with items 1 – 8 above. Accordingly, the above-identified application has been accorded "special" status.

Telephone inquires concerning this decision should be directed to Henry C. Yuen at 571-272-4856.

Currently, the application is undergoing pre-examination processing. Upon completion, this application will be forwarded to a Technology Center for classification and docketed to an examiner for action on the merits commensurate with this decision.

/Henry C. Yuen/

Henry C. Yuen
Quality Assurance Specialist
Technology Center TC 3700

UNITED STATES PATENT AND TRADEMARK OFFICE

COMMISSIONER FOR PATENTS
UNITED STATES PATENT AND TRADEMARK OFFICE
P.O. BOX 1450
ALEXANDRIA, VA 22313-1450
www.uspto.gov

HONEYWELL/CST
PATENT SERVICES
101 COLUMBIA ROAD
P.O. BOX 2245
MORRISTOWN, NJ 07962-2245

MAILED
28 OCT 2010
PCT LEGAL ADMINISTRATION

In re Application of BHANDARI et al :
U.S. Application No.: 12/601,588 :
PCT Application No.: PCT/AU2008/000716 :
Int. Filing Date: 21 May 2008 : DECISION
Priority Date Claimed: 28 May 2007 :
Attorney Docket No.: H0015073-1161.1483101 :
For: SYSTEMS AND METHODS FOR :
CONFIGURING ACCESS CONTROL DEVICES :

This is in response to applicant's renewed petition under 37 CFR 1.47(a) filed on 15 September 2010.

BACKGROUND

On 21 May 2008, applicant filed international application PCT/AU2008/000716, which claimed priority of an earlier Australia application filed 28 May 2007. A copy of the international application was communicated to the USPTO from the International Bureau on 04 December 2008. The thirty-month period for paying the basic national fee in the United States expired on 30 November 2009.

On 24 November 2009, applicant filed national stage papers in the United States Designated/Elected Office (DO/EO/US). The submission was accompanied by, *inter alia*, the basic national fee required by 35 U.S.C. 371(c)(1).

On 01 April 2010, the DO/EO/US mailed a Notification of Missing Requirements Under 35 U.S.C. 371 (Form PCT/DO/EO/905), which indicated that an oath or declaration in compliance with 37 CFR 1.497 must be filed.

On 19 May 2010, applicant filed a petition under 37 CFR 1.47(a).

On 19 July 2010, this Office mailed a decision dismissing the 19 May 2010 petition.

On 15 September 2010, applicant filed the instant renewed petition under 37 CFR 1.47(a).

DISCUSSION

A petition under 37 CFR 1.47(a) must be accompanied by: (1) an oath or declaration by each applicant on his or her own behalf and on behalf of the nonsigning joint inventors, (2) factual proof that the missing joint inventors refuse to join in the application or cannot be reached after diligent effort, (3) the fee set forth in §1.17(i), and (4) the last known addresses of the nonsigning joint inventors.

Applicant previously satisfied items (1), (3), and (4) above.

With regard to item (2) above, MPEP 409.03(d) states in relevant part,

> A refusal by an inventor to sign an oath or declaration when the inventor has not been presented with the application papers does not itself suggest that the inventor is refusing to join the application unless it is clear that the inventor understands exactly what he or she is being asked to sign and refuses to accept the application papers. A copy of the application papers should be sent to the last known address of the nonsigning inventor, or, if the nonsigning inventor is represented by counsel, to the address of the nonsigning inventor's attorney. . . . It is reasonable to require that the inventor be presented with the application papers before a petition under 37 CFR 1.47 is granted since such a procedure ensures that the inventor is apprised of the application to which the oath or declaration is directed. In re Gray, 115 USPQ 80 (Comm'r Pat. 1956).
>
> Where a refusal of the inventor to sign the application papers is alleged, the circumstances of the presentation of the application papers and of the refusal must be specified in a statement of facts by the person who presented the inventor with the application papers and/or to whom the refusal was made. Statements by a party not present when an oral refusal is made will not be accepted.
>
> Proof that a bona fide attempt was made to present a copy of the application papers (specification, including claims, drawings, and oath or declaration) to the nonsigning inventor for signature, but the inventor refused to accept delivery of the papers or expressly stated that the application papers should not be sent, may be sufficient. When there is an express oral refusal, that fact along with the time and place of the refusal must be stated in the statement of facts. When there is an express written refusal, a copy of the document evidencing that refusal must be made part of the statement of facts. The document may be redacted to remove material not related to the inventor's reasons for refusal.
>
> When it is concluded by the 37 CFR 1.47 applicant that a nonsigning inventor's conduct constitutes a refusal, all facts upon which that conclusion is based should be stated in the statement of facts in support of the petition or directly in the petition. If there is documentary evidence to support facts alleged in the petition or in any statement of facts, such evidence should be submitted. Whenever a nonsigning inventor gives a reason for refusing to sign the application oath or declaration, that reason should be stated in the petition.

The petition states that joint inventor Parveen Goel refuses to sign the application papers. Applicant previously demonstrated that a bona fide attempt was made to present a copy of the application papers to Goel for signature and that Goel received such papers (see affidavit of Brian Tufte, ¶¶1-3 and Exhibit B). Furthermore, the renewed petition sufficiently illustrates that Goel refuses to sign. In particular, Goel's failure to return an executed declaration in response to the 12 August 2010 letter delivered to him constitutes a constructive refusal to cooperate. Thus, it can be concluded with reasonable certainty that Goel refuses to join in the application.

CONCLUSION

For the reasons above, the renewed petition under 37 CFR 1.47(a) is GRANTED.

The application has an International Filing Date under 35 U.S.C. 363 of 21 May 2008, and a date under 35 U.S.C. 371(c)(1), (c)(2), and (c)(4) of 19 May 2010.

As set forth in 37 CFR 1.47(a), a notice of the filing of this application will be forwarded to the nonsigning inventor at the last known address of record and will be published in the *Official Gazette*.

This application is being forwarded to the United States Designated/Elected Office (DO/EO/US) for further processing in accordance with this decision.

BryanLin

Bryan Lin
PCT Legal Examiner
PCT Legal Office

Telephone: 571-272-3303
Facsimile: 571-273-0459

UNITED STATES PATENT AND TRADEMARK OFFICE

COMMISSIONER FOR PATENTS
UNITED STATES PATENT AND TRADEMARK OFFICE
P.O. BOX 1450
ALEXANDRIA, VA 22313-1450
www.uspto.gov

Parveen Kumar Goel
33 Wyralla Ave.
Epping, New South Wales 2121
AUSTRALIA

MAILED

OCT 28 2010

PCT LEGAL ADMINISTRATION

In re Application of BHANDARI et al
U.S. Application No.: 12/601,588
PCT Application No.: PCT/AU2008/000716
Int. Filing Date: 21 May 2008
Priority Date Claimed: 28 May 2007
For: SYSTEMS AND METHODS FOR CONFIGURING ACCESS CONTROL DEVICES

Dear Parveen Kumar Goel:

You are named as a joint inventor in the above-captioned United States national stage application, filed under the provisions of 37 CFR 1.47(a) and 35 U.S.C. 116. Should a patent be granted, you will be designated as an inventor.

As a named inventor, you are entitled to inspect any paper in the file wrapper of the application, order copies of all or any part thereof (at a prepaid cost set forth in 37 CFR 1.19) or to make your position of record in the application. Alternatively, you may arrange to do any of the preceding through a registered patent agent or attorney presenting written authorization from you. If you choose to join in the application, counsel of record (see below) would presumably assist you. Joining in the application would entail the filing of an appropriate oath or declaration by you pursuant to 37 CFR 1.63.

Bryan Lin

Bryan Lin
PCT Legal Examiner
PCT Legal Office
Telephone: 571-272-3303
Facsimile: 571-273-0459

HONEYWELL/CST
PATENT SERVICES
101 COLUMBIA ROAD
P.O. BOX 2245
MORRISTOWN, NJ 07962-2245
Attorney Docket No.: H0015073-1161.1483101

UNITED STATES PATENT AND TRADEMARK OFFICE

Commissioner for Patents
United States Patent and Trademark Office
P.O. Box 1450
Alexandria, VA 22313-1450
www.uspto.gov

MAILED

NOV 1 0 2010

PCT LEGAL ADMINISTRATION

HONEYWELL/CST
Patent Services
101 Columbia Road
P.O. Box 2245
Morristown NJ 07962-2245

In re Application of	:	
BHANDARI, Neelendra, et al.	:	
Application No.: 12/601,610	:	DECISION
PCT No.: PCT/AU2008/000717	:	
Int. Filing Date: 21 May 2008	:	ON PETITION UNDER
Priority Date: 28 May 2007	:	
Docket No.: H0014827-1161.1482101	:	37 CFR 1.47(a)
For: SYSTEMS AND METHODS FOR	:	
COMMISSIONING ACCESS	:	
CONTROL DEVICES	:	

This is a decision on applicants' Petition Under 37 CFR 1.47(a), filed in the United States Patent and Trademark Office (USPTO) on 15 September 2010.

BACKGROUND

On 26 July 2010, the Office mailed Decision On Petition, dismissing applicants' petition without prejudice.

On 15 September 2010, applicants filed a renewed petition under 37 CFR 1.47(a).

DISCUSSION

A petition under 37 CFR 1.47 must be accompanied by: (1) the fee under 37 CFR 1.17(h), (2) proof of pertinent facts, namely that the inventor refuses to sign after being presented with the application papers or cannot be reached after diligent effort, (3) a statement of the last known address of the inventor, and (4) an oath or declaration by the 37 CFR 1.47(a) applicant on behalf of himself or herself and the nonsigning applicant.

Item (1), (3) and (4) have been met. The petition fee has been paid. Applicant states the last known address of Mr. Parveen Goel as 33 Wyralla Avenue, Epping, New South Wales 2121, Australia. The declaration complies with 37 CFR 1.497(a)-(b) and 1.47.

Item (2) has not been satisfied. Applicants are attempting to establish refusal by the inventor to execute the declaration. In the 19 May 2010 petition, Brian N. Tufte states that Mr. Goel refused to execute the declaration in an email received 17 May 2010, but that email was not included. Applicants have again not furnished it nor have applicants explained their failure to

furnish it. As for the 20 August 2010 letter, applicants did not allow sufficient time to review and execute the forms. One month is considered a reasonable period.

CONCLUSION

For the above reasons, applicant's petition under 37 CFR 1.47(a) is **DISMISSED** without prejudice.

If reconsideration on the merits of this petition is desired, a proper response must be filed within **TWO (2) MONTHS** from the mail date of this decision. Failure to timely file the proper response will result in abandonment of this application. Extensions of time under 37 CFR 1.136(a) are available. Any reconsideration request should include a cover letter entitled "Renewed Petition Under 37 CFR 1.47(a)." No additional petition fee is required.

Any further correspondence with respect to this matter may be filed electronically via EFS-Web selecting the document description "Petition for review and processing by the PCT Legal Office" or by mail addressed to Mail Stop PCT, Commissioner for Patents, Office of PCT Legal Administration, P.O. Box 1450, Alexandria, Virginia 22313-1450, with the contents of the letter marked to the attention of the Office of PCT Legal Administration.

/Erin P. Thomson/

Erin P. Thomson
Attorney Advisor
PCT Legal Administration

Telephone: 571-272-3292

UNITED STATES PATENT AND TRADEMARK OFFICE

Commissioner for Patents
United States Patent and Trademark Office
P.O. Box 1450
Alexandria, VA 22313-1450
www.uspto.gov

MAILED

JAN 12 2011

PCT LEGAL ADMINISTRATION

HONEYWELL/CST
Patent Services
101 Columbia Road
P.O. Box 2245
Morristown NJ 07962-2245

In re Application of	:	
BHANDARI, Neelendra, et al.	:	
Application No.: 12/601,610	:	DECISION
PCT No.: PCT/AU2008/000717	:	
Int. Filing Date: 21 May 2008	:	ON PETITION UNDER
Priority Date: 28 May 2007	:	
Docket No.: H0014827-1161.1482101	:	37 CFR 1.47(a)
For: SYSTEMS AND METHODS FOR	:	
COMMISSIONING ACCESS	:	
CONTROL DEVICES	:	

This is a decision on applicants' renewed Petition Under 37 CFR 1.47(a), filed in the United States Patent and Trademark Office (USPTO) on 10 December 2010.

BACKGROUND

On 10 November 2010, the Office mailed Decision On Petition, dismissing applicants' petition without prejudice.

On 10 December 2010, applicants filed a renewed petition under 37 CFR 1.47(a).

DISCUSSION

A petition under 37 CFR 1.47 must be accompanied by: (1) the fee under 37 CFR 1.17(h), (2) proof of pertinent facts, namely that the inventor refuses to sign after being presented with the application papers or cannot be reached after diligent effort, (3) a statement of the last known address of the inventor, and (4) an oath or declaration by the 37 CFR 1.47(a) applicant on behalf of himself or herself and the nonsigning applicant.

Item (1), (3) and (4) have been met. The petition fee has been paid. Applicant states the last known address of Mr. Parveen Goel as 33 Wyralla Avenue, Epping, New South Wales 2121, Australia. The declaration complies with 37 CFR 1.497(a)-(b) and 1.47.

Item (2) has now been satisfied. Applicants have twice presented the inventor with a complete copy of the application papers, including the declaration. One time he refused to execute the declaration in an email. On the other occasion, he did not respond after the passage of a reasonable period of time.

CONCLUSION

For the above reasons, applicant's petition under 37 CFR 1.47(a) is **GRANTED**.

As provided in 37 CFR 1.47(a), a notice of the filing of this application will be forwarded to the nonsigning inventor at his last known address of record.

A notice of the filing of the application under 37 CFR 1.47(a) will be published in the Official Gazette.

This application is being forwarded to the National Stage Processing Branch of the Office of PCT Operations to continue national stage processing of the application, including accordation of a 35 U.S.C. §371(c)(1), (c)(2) and (c)(4) date of **19 May 2010**.

/Erin P. Thomson/

Erin P. Thomson
Attorney Advisor
PCT Legal Administration

Telephone: 571-272-3292

UNITED STATES PATENT AND TRADEMARK OFFICE

Commissioner for Patents
United States Patent and Trademark Office
P.O. Box 1450
Alexandria, VA 22313-1450
www.uspto.gov

MAILED

JAN 12 2011

PCT LEGAL ADMINISTRATION

Parveen Goel
33 Wyralla Avenue
Epping, New South Wales 2121
Australia

In re Application of
BHANDARI, Neelendra, et al.
Application No.: 12/601,610
PCT No.: PCT/AU2008/000717
Int. Filing Date: 21 May 2008
Priority Date: 28 May 2007
Docket No.: H0014827-1161.1482101
For: SYSTEMS AND METHODS FOR COMMISSIONING ACCESS CONTROL DEVICES

Dear Mr. Goel:

You are named as an inventor in the above-captioned United States national stage application, filed under the provisions of 37 CFR 1.47(a) and 35 U.S.C. 116. Should a patent be granted, you will be designated as an inventor.

As a named inventor, you are entitled to inspect any paper in the file wrapper of the application, order copies of all or any part thereof (at a prepaid cost per 37 CFR 1.19) or to make your position of record in the application. Alternatively, you may arrange to do any of the preceding through a registered patent agent or attorney presenting written authorization from you. The counsel for the applicant is listed below. Joining in the application would entail the filing of an appropriate oath or declaration by you pursuant to 37 CFR 1.63.

/Erin P. Thomson/

Erin P. Thomson
Attorney Advisor
PCT Legal Administration

Telephone: 571-272-3292

HONEYWELL/CST
Patent Services
101 Columbia Road
P.O. Box 2245
Morristown NJ 07962-2245

3 1 AUG 2010

UNITED STATES PATENT AND TRADEMARK OFFICE

Commissioner for Patents
United States Patent and Trademark Office
P.O. Box 1450
Alexandria, VA 22313-1450
www.uspto.gov

CLARK & ELBING LLP
101 FEDERAL STREET
BOSTON MA 02110

In re Application of	:	
BUENING et al	:	
Application No.: 12/601,639	:	
PCT No.: PCT/EP2008/004366	:	
Int. Filing Date: 02 June 2008	:	DECISION
Priority Date: 31 May 2007	:	
Attorney Docket No.: 50125/130002	:	
For: MUTATED PARVOVIRUS	:	
STRUCTURAL PROTEINS AS VACCINES	:	

The decision is in response to applicants' petition under 37 CFR 1.182 to change the name of an inventor filed in the USPTO on 03 June 1010.

BACKGROUND

On 02 June 2008, applicants filed international application PCT/EP2008/004366 which designated the United States and claimed a priority date of 31 May 2007. A copy of the international application was communicated to the United States Patent and Trademark Office from the International Bureau on 04 December 2008. The thirty-month period for paying the basic national fee in the United States expired at midnight on 30 November 2009.

On 24 November 2009, applicants filed a transmittal letter for entry into the national stage in the United States, which was accompanied by, *inter alia*, the U.S. Basic National Fee and an Application Data Sheet (ADS).

On 23 March 2010, applicants filed a submission including a declaration of inventors.

On 03 June 2010, applicants submitted the instant petition under 37 CFR 1.182 and a Supplemental ADS including the changed name of the inventor requesting the name change.

On 17 August 2010, the DO/EO/US issued a Filing Receipt and a NOTICE OF ACCEPTANCE OF APPLICATION UNDER 35 U.S.C. 371 AND 37 CFR 1.495 (Form PCT/DO/EO/909) according the application both a 35 U.S.C. 371(c)(1), (c)(2), and (c)(4) date and a 35 U.S.C. 371 date of 23 March 2010.

DISCUSSION

In instances where an inventor has changed his or her name after the application has been filed, a petition under 37 CFR 1.182 must be submitted. The petition must include (1) the appropriate petition fee and (2) a statement signed by the inventor setting forth both names and the procedure whereby the change of name was effected, or a certified copy of the court order. MPEP § 605.04(c).

As to item (1), the petition fee is $400 (37 CFR 1.17(f)) rather than $130 (37 CFR 1.17(h)). The difference has been charged to Deposit Account 032095.

With regard to item (2), the attachment to the petition which includes a seal dated 27 April 2010 is construed to be a certified copy of the court order. (If this interpretation is incorrect, applicants are required to provide a written notification of this fact to the Office of PCT Legal Administration *immediately*.)

Declaration of Inventors

The declaration of inventors filed 23 March 2010 is in compliance with 37 CFR 1.497(a)-(b).

CONCLUSION

For the reasons set forth above, the petition under 37 CFR 1.182 is **GRANTED**.

Although the Filing Receipt issued 17 August 2010 was issued before this decision granting applicants' petition, it does include the changed name for inventor Daniela Kuehn and is hereby affirmed.

This application is being forwarded for continued processing of the application.

/Daniel Stemmer/

Daniel Stemmer
Legal Examiner
PCT Legal Affairs
Office of Patent Cooperation Treaty
Legal Administration
Telephone: (571) 272-3301

UNITED STATES PATENT AND TRADEMARK OFFICE

UNITED STATES DEPARTMENT OF COMMERCE
United States Patent and Trademark Office
Address: COMMISSIONER FOR PATENTS
P.O. Box 1450
Alexandria, Virginia 22313-1450
www.uspto.gov

APPLICATION NO.	FILING DATE	FIRST NAMED INVENTOR	ATTORNEY DOCKET NO.	CONFIRMATION NO.
12/601,657	11/24/2009	Ryuichi Shimada	ADV-1140-UT	9245

82974 7590 01/13/2011
INTERNATIONAL KNOWLEDGE ASSET OFFICE
19200 Von Karman Ave. Suite 400
IRVINE, CA 92612

EXAMINER

ART UNIT	PAPER NUMBER
2836	

NOTIFICATION DATE	DELIVERY MODE
01/13/2011	ELECTRONIC

Please find below and/or attached an Office communication concerning this application or proceeding.

The time period for reply, if any, is set in the attached communication.

Notice of the Office communication was sent electronically on above-indicated "Notification Date" to the following e-mail address(es):

patent@knowledgeasset.net
dwenskay@knowledgeasset.com
kmasaki@knowledgeasset.com

UNITED STATES PATENT AND TRADEMARK OFFICE

Commissioner for Patents
United States Patent and Trademark Office
P.O. Box 1450
Alexandria, VA 22313-1450
www.uspto.gov

INTERNATIONAL KNOWLEDGE ASSET OFFICE
19200 Von Karman Ave. Suite 400
IRVINE CA 92612

In re Application of	**: DECISION ON REQUEST TO**
Ryuichi SHIMADA	**: PARTICIPATE IN THE PATENT**
Application No.: 12/601,657	**: PROSECUTION HIGHWAY**
Filed: 24 November 2009	**: PROGRAM AND PETITION**
Attorney Docket No.: ADV-1140-UT	**: TO MAKE SPECIAL UNDER**
For: MAGNETIC ENERGY	**: 37 CFR 1.102(a)**
RECOVERY SWITECH HAVING	
PROTECTIVE CIRCUIT	

This is a decision on the request to participate in the Patent Prosecution Highway (PPH) program and the petition under 37 CFR 1.102(a), filed 08 December 2010, to make the above-identified application special.

The request and petition are **DISMISSED**.

A grantable request to participate in the PPH program and petition to make special require:

1. The U.S. application must validly claim priority under 35 U.S.C. 119(a) to one or more applications filed in the JPO, note where the JPO application with similar claims is not the same application from which the U.S. application claims priority that the applicant must identify the relationship between the JPO application with similar claims and the JPO priority application;

2. Applicant must submit a copy of:
   a. The allowable/patentable claim(s) from the JPO application(s) or if a copy of the allowable/patentable claims is available via the Dossier Access System (DAS) applicant may request the USPTO obtain a copy from the DAS, however if the USPTO is unable to obtain a copy from the DAS the applicant will be required to submit a copy;
   b. An English translation of the allowable/patentable claim(s) and
   c. A statement that the English translation is accurate;

3. Applicant must
   a. Ensure all the claims in the U.S. application must sufficiently correspond or be amended to sufficiently correspond to the allowable/patentable claim(s) in the JPO application(s) and
   b. Submit a claims correspondence table in English;

4. Examination of the U.S. application has not begun;

5. Applicant must submit:
    a. Documentation of prior office action:
        i. a copy of the office action(s) just prior to the "Decision to Grant a Patent" from each of the JPO application(s) containing the allowable/patentable claim(s) or
        ii. if the allowable/patentable claims(s) are from a "Notification of Reasons for Refusal" then the Notification of Reasons for Refusal or
        iii. if the JPO application is a first action allowance then no office action from the JPO is necessary should be indicated on the request/petition form;

    Further, if a copy of the documents from a or b above is available via the Dossier Access System (DAS) applicant may request the USPTO obtain a copy from the DAS, however if the USPTO is unable to obtain a copy from the DAS the applicant will be required to submit a copy;
    b. An English language translation of the JPO Office action from (5)(a)(i)-(ii) above
    c. A statement that the English translation is accurate;

6. Applicant must submit:
    a. An IDS listing the documents cited by the JPO examiner in the JPO office action (unless already submitted in this application)
    b. Copies of the documents except U.S. patents or U.S. patent application publications (unless already submitted in this application);

Conditions (1-2) and (4-6) above are considered to have been met. However, the request to participate in the PPH pilot program and petition fails meet condition (3).

Regarding the requirement of condition (3), applicant has failed to ensure that all the claims in the U.S. application sufficiently correspond to the allowable/patentable claims in the JPO application. Specifically, US claim 18 depends from deleted claim 7 and accordingly does not correspond to an allowable/patentable JPO claim. Favourable consideration would be given if US claim 18 is cancelled.

Applicant is given **ONE** opportunity within a time period of **ONE MONTH or THIRTY DAYS**, whichever is longer, from the mailing date of this decision to correct the deficiencies. **NO EXTENSION OF TIME UNDER 37 CFR 1.136 IS PERMITTED.** If the deficiencies are not corrected with the time period given, the application will await action in its regular turn.

Response must be filed via the Electronic Filing System (EFS) using the document description: Petition to make special under Patent Pros Hwy. Any preliminary amendments and IDS submitted with the PPH documents must be separately indexed as a preliminary amendment and IDS, respectively.

Telephone inquiries concerning this decision should be directed to Lee W. Young at 571-272-4549.

All other inquiries concerning the examination or status of the application is accessible in the PAIR system at http://www.uspto.gov/ebc/index.html.

Lee W. Young
TQAS Technology Center 2800

UNITED STATES PATENT AND TRADEMARK OFFICE

UNITED STATES DEPARTMENT OF COMMERCE
United States Patent and Trademark Office
Address: COMMISSIONER FOR PATENTS
P.O. Box 1450
Alexandria, Virginia 22313-1450
www.uspto.gov

APPLICATION NO.	FILING DATE	FIRST NAMED INVENTOR	ATTORNEY DOCKET NO.	CONFIRMATION NO.
12/601,657	11/24/2009	Ryuichi Shimada	ADV-1140-UT	9245

82974 7590 02/03/2011
INTERNATIONAL KNOWLEDGE ASSET OFFICE
19200 Von Karman Ave. Suite 400
IRVINE, CA 92612

EXAMINER

ART UNIT	PAPER NUMBER
2836	

NOTIFICATION DATE	DELIVERY MODE
02/03/2011	ELECTRONIC

Please find below and/or attached an Office communication concerning this application or proceeding.

The time period for reply, if any, is set in the attached communication.

Notice of the Office communication was sent electronically on above-indicated "Notification Date" to the following e-mail address(es):

patent@knowledgeasset.net
dwenskay@knowledgeasset.com
kmasaki@knowledgeasset.com

UNITED STATES PATENT AND TRADEMARK OFFICE

Commissioner for Patents
United States Patent and Trademark Office
P.O. Box 1450
Alexandria, VA 22313-1450
www.uspto.gov

INTERNATIONAL KNOWLEDGE ASSET OFFICE
19200 Von Karman Ave. Suite 400
IRVINE CA 92612

In re Application of	**: DECISION ON REQUEST TO**
Ryuichi SHIMADA	**: PARTICIPATE IN THE PATENT**
Application No.: 12/601,657	**: PROSECUTION HIGHWAY**
Filed: 24 November 2009	**: PROGRAM AND PETITION**
Attorney Docket No.: ADV-1140-UT	**: TO MAKE SPECIAL UNDER**
For: MAGNETIC ENERGY	**: 37 CFR 1.102(a)**
RECOVERY SWITECH HAVING	
PROTECTIVE CIRCUIT	

This is a decision on the request to participate in the Patent Prosecution Highway (PPH) program and the petition under 37 CFR 1.102(a), filed 08 December 2010 and renewed on 21 January 2011, to make the above-identified application special.

The request and petition are **GRANTED**.

Discussion

A grantable request to participate in the PPH pilot program and petition to make special require:

1. The U.S. application is
    a. a Paris Convention application which either
        i. validly claims priority under 35 U.S.C. 119(a) and 37 CFR 1.55 to one or more applications filed in the JPO, or
        ii. validly claims priority to a PCT application that contains no priority claims, or
    b. a national stage application under the PCT (an application which entered the national stage in the U.S. from a PCT international application after compliance with 35 U.S.C. 371), which PCT application
        i. validly claims priority to an application filed in the JPO, or
        ii. validly claims priority to a PCT application that contains no priority claims, or
        iii. contains no priority claim, or
    c. a so-called bypass application filed under 35 U.S.C. 111(a) which validly claims benefit under 35 U.S.C. 120 to a PCT application, which PCT application
        i. validly claims priority to an application filed in the JPO, or
        ii. validly claims priority to a PCT application that contains no priority claims, or
        iii. contains no priority claim;

2. Applicant must submit a copy of:
    a. The allowable/patentable claim(s) from the JPO application(s);
    b. An English translation of the allowable/patentable claim(s) and
    c. A statement that the English translation is accurate;
3. Applicant must:
    a. Ensure all the claims in the U.S. application must sufficiently correspond or be amended to sufficiently correspond to the allowable/patentable claim(s) in the JPO application(s) and
    b. Submit a claims correspondence table in English;
4. Examination of the U.S. application has <u>not</u> begun;
5. Applicant must submit:
    a. Documentation of prior office action:
        i. a copy of the office action(s) just prior to the "Decision to Grant a Patent" from each of the JPO application(s) containing the allowable/patentable claim(s) or
        ii. if the allowable/patentable claims(s) are from a "Notification of Reasons for Refusal" then the Notification of Reasons for Refusal or
        iii. if the JPO application is a first action allowance then no office action from the JPO is necessary should be indicated on the request/petition form;
    b. An English language translation of the JPO Office action from (5)(a)(i)-(ii) above
    c. A statement that the English translation is accurate;
6. Applicant must submit:
    a. An IDS listing the documents cited by the JPO examiner in the JPO office action (unless already submitted in this application)
    b. Copies of the documents except U.S. patents or U.S. patent application publications (unless already submitted in this application);

The request to participate in the PPH pilot program and petition comply with the above requirements. Accordingly, the above-identified application has been accorded "special" status.

Inquiries concerning this decision should be directed to Lee W. Young at 571-272-4549.

All other inquiries concerning the examination or status of the application is accessible in the PAIR system at http://www.uspto.gov/ebc.index.html.

This application will be forwarded to the examiner for action on the merits commensurate with this decision once this application's formality reviews have been completed.

Lee W. Young
TQAS, Technology Center 2800 – Semiconductors
Electrical & Optical Systems & Components

UNITED STATES PATENT and TRADEMARK OFFICE

COMMISSIONER FOR PATENTS
UNITED STATES PATENT AND TRADEMARK OFFICE
P.O BOX 1450
ALEXANDRIA, VA 22313-1450
www.uspto.gov

Thomas J. Durling
FLASTER/GREENBERG P.C.
Four Penn Center
1600 John F. Kennedy Boulevard
2nd Floor
PHILADELPHIA PA 19103

MAILED
NOV 02 2010
PCT LEGAL ADMINISTRATION

In re Application of	DECISION ON
Whitelaw et al	
Application No: 12/601,671	
PCT No.: PCT/GB2008/001885	
Int. Filing Date: 02 June 2008	PETITION UNDER
Priority Date: 02 June 2007	
Attorney's Docket No: M1326-2US	
For: CABLE PROTECTOR	37 CFR 1.47(a)

This is in response to the "PETITION UNDER 37 CFR 1.47 TO ACCEPT APPLICATION WHERE ONE JOINT INVENTOR REFUSES TO SIGN DECLARATION" filed on 01 September 2010. The $200.00 petition fee has not been provided.

BACKGROUND

On 24 November 2009, applicants filed a Transmittal Letter for entry into the national stage in the United States of America. Filed with the Transmittal Letter was, inter alia, the requisite basic national fee. No executed oath or declaration from the inventors accompanied the Transmittal Letter.

On 02 March 2010, the United States Designated/Elected Office (DO/EO/US) mailed a "NOTIFICATION OF MISSING REQUIREMENTS UNDER 35 U.S.C. 371 IN THE UNITED STATES DESIGNATED/ELECTED OFFICE (DO/EO/US)" (Form PCT/DO/EO/905), which informed applicant, inter alia, that an "Oath or Declaration of the inventors, in compliance with 37 CFR 1.497(a), and (b), identifying the application by the International application number and international filing date... is not executed in accordance with either 37 CFR 1.66 or 37 CFR 1.68" The notice also indicated that the items must be submitted within two months from the mailing date of this notice or by 32 months from the priority date, whichever is later, in order to avoid abandonment of the national stage application.

On 01 September 2010, petitioner filed the present petition accompanied, inter alia, an executed Declaration without the signature of one of the inventors, i.e., without the signature of Calum Whitelaw.

37 CFR 1.47(a):

DISCUSSION

A petition under 37 CFR 1.47(a) must be accompanied by (1) the fee under 37 CFR 1.17(g), (2) factual proof that the missing joint inventor refuses to execute the application or cannot be reached after diligent effort, (3) a statement of the last known address of the missing inventor, and (4) an oath or declaration by each 37 CFR 1.47(a) applicant on his or her own behalf and on behalf of the non-signing joint inventor.

Furthermore, section 409.03(d) of the Manual of Patent Examining Procedure (M.P.E.P.) **Proof of Unavailability or Refusal**, the relevant sections states, in part:

REFUSAL TO JOIN:

A refusal by an inventor to sign an oath or declaration when the inventor has not been presented with the application papers does not itself suggest that the inventor is refusing to join the application unless it is clear that the inventor understands exactly what he or she is being asked to sign and refuses to accept the application papers. A copy of the application papers should be sent to the last known address of the nonsigning inventor, or, if the nonsigning inventor is represented by counsel, to the address of the nonsigning inventor's attorney. The fact that an application may contain proprietary information does not relieve the **37 CFR 1.47** applicant of the responsibility to present the application papers to the inventor if the inventor is willing to receive the papers in order to sign the oath or declaration. It is noted that the inventor may obtain a complete copy of the application, unless the inventor has assigned his or her interest in the application, and the assignee has requested that the inventor not be permitted access. See **MPEP § 106**. It is reasonable to require that the inventor be presented with the application papers before a petition under **37 CFR 1.47** is granted since such a procedure ensures that the inventor is apprised of the application to which the oath or declaration is directed. *In re Gray*, 115 USPQ 80 (Comm'r Pat. 1956).

Where a refusal of the inventor to sign the application papers is alleged, the circumstances of the presentation of the application papers and of the refusal must be specified in a statement of facts by the person who presented the inventor with the application papers and/or to whom the refusal was made. Statements by a party not present when an oral refusal is made will not be accepted.

> Proof that a *bona fide* attempt was made to present a copy of the application papers (specification, including claims, drawings, and oath or declaration) to the nonsigning inventor for signature, but the inventor refused to accept delivery of the papers or expressly stated that the application papers should not be sent, may be sufficient. When there is an express oral refusal, that fact along with the time and place of the refusal must be stated in the statement of facts. When there is an express written refusal, a copy of the document evidencing that refusal must be made part of the statement of facts. The document may be redacted to remove material not related to the inventor's reasons for refusal.
>
> When it is concluded by the **37 CFR 1.47** applicant that a nonsigning inventor's conduct constitutes a refusal, all facts upon which that conclusion is based should be stated in the statement of facts in support of the petition or directly in the petition. If there is documentary evidence to support facts alleged in the petition or in any statement of facts, such evidence should be submitted. Whenever a nonsigning inventor gives a reason for refusing to sign the application oath or declaration, that reason should be stated in the petition.

Petitioner has satisfied requirements (3), and (4) of 37 CFR 1.47(a). However, items (1) and (2) of 37 CFR 1.47(a) have not been satisfied.

Regarding item (1), petitioner has not provided the petition fee of $200 under 37 CFR 1.17(g). .

Regarding requirement (2), Mr. Durling states in the petition that Ms. Butters mailed the forms (Declaration and Power of Attorney) to each joint inventor but no signed form was received from Mr. Whitelaw. Then Mr. Aitken on April 2010, sent and email and afterwards contacted Mr. Whitelaw by telephone in which Mr. Whitelaw indicated that he had received the forms but had no desire to sign the application forms. Mr. Dykesteen then contacted Mr. Whitelaw and he indicated that he felt no obligation to sign the application forms and refused to sign them.

However, a review of the affidavits is not clear that a complete set of application papers were mailed and presented to Mr. Whitelaw to sign. It is noted that no documentary evidence has been introduced into the file that shows that Mr. Whitelaw was presented with a complete application as the affidavit of Ms. Butters and Mr. Aitken only refers to the application forms (Declaration and Power of Attorney). Before a refusal can be alleged, it must be demonstrated that a bona fide attempt was made to present a copy of the application papers (specification, including claims, drawings, and oath or declaration) to the non-signing inventor for signature. It would appear, from Mr. Durling's statement, the affidavits and the evidence provided that Mr. Whitelaw was only given the declaration and the assignment to sign and not a complete copy of the application.

Moreover, the when there is an express oral refusal, that fact along with the time and place of the refusal must be stated in the statement of facts and the affidavits provided by Messrs. Aitken and Dykesteen do not meet such requirement as they are vague to the specifics.

Consequently, the petition does not include sufficient factual proof that Mr. Whitelaw refuses to sign the required papers as a complete set of the application papers were not presented to him.

Regarding item (3), petitioner has provided an affirmative statement of the last known address of the missing joint inventor, Calum Whitelaw.

Clinterty Home Farm College
Kingswells
Aberdeen, AB15 8RN
England

Regarding time (4), petitioner has provided a provided a properly executed declaration with without the signature of Mr. Whitelaw.

Consequently, at this time it can not be concluded that Mr. Whitelaw has refused to sign the documents based on the evidence provided.

Accordingly, the petition has not met all the items under 37 CFR 1.47(a).

DECISION

The petition under 37 CFR 1.47(a) is **DISMISSED** without prejudice.

If reconsideration of the merits of the petition under 37 CFR 1.47(a) is desired, applicant must file a request for reconsideration within **TWO (2) MONTHS** from the mail date of this Decision. Any reconsideration request should include a cover letter entitled "Renewed Petition Under 37 CFR 1.47(a)." Extensions of time are available under 37 CFR 1.136(a). Failure to timely file the proper response will result in ABANDONMENT.

Any further correspondence with respect to this matter may be filed electronically via EFS-Web selecting the document description "Petition for review and processing by the PCT Legal Office" or by mail addressed to Mail Stop PCT, Commissioner for Patents, Office of PCT Legal Administration, P.O. Box 1450, Alexandria, Virginia 22313-1450, with the contents of the letter marked to the attention of the Office of PCT Legal Administration.

Rafael Bacares
PCT Legal Examiner
PCT Legal Office
Telephone: (571) 272-3276
Facsimile: (571) 272-0459

UNITED STATES PATENT and TRADEMARK OFFICE

COMMISSIONER FOR PATENTS
UNITED STATES PATENT AND TRADEMARK OFFICE
P.O BOX 1450
ALEXANDRIA, VA 22313-1450
www.uspto.gov

Thomas J. Durling
FLASTER/GREENBERG P.C.
Four Penn Center
1600 John F. Kennedy Boulevard
2nd Floor
PHILADELPHIA PA 19103

MAILED
APR 01 2011
PCT LEGAL ADMINISTRATION

In re Application of	:	DECISION ON RENEWED
Whitelaw et al	:	
Application No: 12/601,671	:	
PCT No.: PCT/GB2008/001885	:	
Int. Filing Date: 02 June 2008	:	PETITION UNDER
Priority Date: 02 June 2007	:	
Attorney's Docket No: M1326-2US	:	
For: CABLE PROTECTOR	:	37 CFR 1.47(a)

This decision is in response to applicants' "RENEWED PETITION UNDER 37 CFR 1.47(a)" filed on 02 February 2011.

BACKGROUND

The decision by this Office dated 02 November 2010 indicated that requirements (1) and (2) under 37 CFR 1.47(a) had not been satisfied.

On 02 February 2011, petitioner filed this renewed petition accompanied, inter alia, an executed declaration by previous nonsigning co-inventor Calum Whitelaw.

DISCUSSION

The renewed petition has includes a newly executed declaration and the declaration is now signed by all the joint inventors.

Accordingly, the declaration submitted on 02 February 2011 complies with 37 CFR 1.497(a) and (b).

CONCLUSION

The petition under 37 CFR 1.47(a) is **MOOT**.

This application is being returned to the United States Designated/Elected Office (DO/EO/US) for continued processing consistent with this decision. The 35 USC 371(c)(1), (c)(2), and (c)(4) date of this application is **02 February 2011.**

Rafael Bacares
PCT Legal Examiner
PCT Legal Office
Tel: (571) 272-3276
Fax: (571) 273-0459

UNITED STATES PATENT AND TRADEMARK OFFICE

Commissioner for Patents
United States Patent and Trademark Office
P.O. Box 1450
Alexandria, VA 22313-1450
www.uspto.gov

Blank Rome, LLP
Watergate
600 New Hampshire Avenue, N.W.
Washington, DC 20037

MAILED
MAR 06 2012
OFFICE OF PETITIONS

In re Application of	:	
Howard Federoff et al.	:	
Application No. 12/601,673	:	DECISION ON PETITION
Filed: July 16, 2010	:	TO WITHDRAW
Attorney Docket No. 2973.0070001/EKS/NPS	:	FROM RECORD
	:	

This is a decision on the Request to Withdraw as attorney or agent of record under 37 C.F.R. § 1.36(b), filed October 25, 2010.

The request is **moot because a revocation of power of attorney has been filed.**

A review of the file record indicates that the power of attorney to all attorneys/agents associated with the firm of Blank, Rome, LLP have been revoked by the assignee of the patent application on February 21, 2012. Accordingly, the request to withdraw under 37 C.F.R. § 1.36(b) is moot.

All future communications from the Office will continue to be directed to the below listed until otherwise notified by applicant.

Telephone inquires concerning this decision should be directed to Kimberly Inabinet at 571-272-4618.

/Kimberly Inabinet/

Kimberly Inabinet
Petitions Examiner
Office of Petitions

cc: Sterne, Kessler, Goldstein & Fox, PLLC
1100 New York Avenue, NW
Washington, DC 20005

UNITED STATES PATENT AND TRADEMARK OFFICE

UNITED STATES DEPARTMENT OF COMMERCE
United States Patent and Trademark Office
Address: COMMISSIONER FOR PATENTS
P.O. Box 1450
Alexandria, Virginia 22313-1450
www.uspto.gov

APPLICATION NO.	FILING DATE	FIRST NAMED INVENTOR	ATTORNEY DOCKET NO.	CONFIRMATION NO.
12/601,696	12/02/2009	Kim Kivela	187-160 PCT/US	9472

23869 7590 08/19/2010
HOFFMANN & BARON, LLP
6900 JERICHO TURNPIKE
SYOSSET, NY 11791

EXAMINER
WU, DANIEL J

ART UNIT	PAPER NUMBER
2612	

MAIL DATE	DELIVERY MODE
08/19/2010	PAPER

Please find below and/or attached an Office communication concerning this application or proceeding.

The time period for reply, if any, is set in the attached communication.

UNITED STATES PATENT AND TRADEMARK OFFICE

Commissioner for Patents
United States Patent and Trademark Office
P.O. Box 1450
Alexandria, VA 22313-1450
www.uspto.gov

HOFFMANN & BARON, LLP
6900 JERICHO TURNPIKE
SYOSSET NY 11791

Applicant: Kivela et al.
Appl. No.: 12/601,696
Filing Date: December 2, 2009
Title: INPUT ARRANGEMENT
Attorney Docket No.: 187-160 PCT/US
Pub. No.: US 2010/0164759 A1
Pub. Date: July 1, 2010

This is a decision on the request for republication of patent application publication under 37 CFR 1.221(a), filed on August 16, 2010, for the above-identified application.

The request under 37 CFR 1.221(a) is DISMISSED.

37 CFR 1.221(a) requires "a copy of the application in compliance with the Office electronic filing system requirements and be accompanied by the publication fee set forth in § 1.18(d) and the processing fee set forth in § 1.17(i)". If the request for republication does not comply with the electronic filing system requirements, the republication will not take place and the publication fee set forth in § 1.18(d) will be refunded. The processing fee will be retained.

The applicant did not supply a copy of the application in compliance with the Office electronic filing system, as required by 37 CFR 1.221(a) because **the Applicant submitted the papers as a "Document for an existing application", which are entered into the application file, and not as a "Pre-Grant Publication" submission**. The request for republication does not comply with the electronic filing system requirements, thus republication will not take place.

Any request for republication under 37 CFR 1.221(a), must be submitted via the EFS system, as a Pre-Grant publication submission and must include a copy of the application in compliance with the Office electronic filing system requirements. The applicant is directed to the following website for additional instructions on how to submit a Pre-Grant Publication submission via the electronic filing system:

http://www.uspto.gov/ebc/portal/efs/pgpub_quickstart.pdf

Any questions or requests for reconsideration of the decision should be addressed as follows:

By mail to: Mail Stop PGPUB
Commissioner for Patents
P.O. Box 1450
Alexandria, Va. 22313-1450

By facsimile: 571-273-8300

Telephone inquiries regarding this correspondence should be directed to The Office of Data Management at 571-272-4200.

Tammy J. Koontz
Office of Data Management
United States Patent & Trademark Office

Adjustment date: 08/20/2010 KKING1
08/16/2010 INTEFSW 00007293 082461 12601696
02 FC:1504 300.00 CR

UNITED STATES PATENT AND TRADEMARK OFFICE

COMMISSIONER FOR PATENTS
UNITED STATES PATENT AND TRADEMARK OFFICE
P.O. BOX 1450
ALEXANDRIA, VA 22313-1450
www.uspto.gov

MYERS BIGEL SIBLEY & SAJOVEC
PO BOX 37428
RALEIGH NC 27627

MAILED
JUN 22 2011
PCT LEGAL ADMINISTRATION

In re Application of :
FRANZEN *et al* :
Application No.: 12/601,736 :
PCT No.: PCT/US08/06540 :
Int. Filing Date: 05/22/2008 : DECISION
Priority Date: 05/25/2007 :
Atty. Docket No.: 5051-764 :
For: VIRAL NANOPARTICLE CELL- :
TARGETED DELIVERY PLATFORM :

This is a decision on applicants' "STATEMENT IN LIEU OF FILING A SEQUENCE LISTING UNDER 37 CFR 1.821(e)" filed in the U.S. Patent and Trademark Office (USPTO) on 24 November 2009. The request is DISMISSED without prejudice as discussed below.

BACKGROUND

On 05/22/2008, applicants filed international application No. PCT/US08/06540 which claimed a priority date of 05/25/2007, and which designated the United States.

The deadline for submission of a copy of the international application (unless previously communicated by the International Bureau) and payment of the basic national fee expired 30 months from the priority date, i.e. 25 November 2009.

On 24 November 2009, applicants filed a transmittal letter for entry into the national stage in the United States which was accompanied by, *inter alia*,: the basic national fee and the present request.

DISCUSSION

37 CFR 1.821(e) states, in part:

> If the computer readable form of a new application is to be identical with the computer readable form of another application of the applicant on file in the Office, reference may be made to the other application and computer readable form in lieu of filing a duplicate computer readable form in the new application if the computer readable form in the other

application was compliant with all of the requirements of this subpart. The new application must be accompanied by a letter making such reference to the other application and computer readable form, both of which shall be completely identified. In the new application, applicant must also request the use of the compliant computer readable "Sequence Listing" that is already on file for the other application and must state that the paper or compact disc copy of the "Sequence Listing" in the new application is identical to the computer readable copy filed for the other application.

A review of both the present application and the prior filed international application reveals that applicants' request may not be properly granted in that applicants did not submit a copy of the computer readable Sequence Listing to the USPTO in the prior application. Specifically, a review of PCT/US08/06540 reveals that the international application as filed in the U.S. Receiving Office did not contain a computer readable Sequence Listing. Further, the Written Opinion of the International Searching Authority as issued by the ISA/EP indicates that the computer readable Sequence Listing was submitted directly to the EPO on a date subsequent to the international filing date. As such, the present request is not in compliance with 37 CFR 1.821(e) since the Sequence Listing in a computer readable form of another application of the applicant is not on file in the Office.

A further review of the application reveals that applicants have not submitted a declaration of the inventors as required for national stage entry.

CONCLUSION

For the reasons above, the request is **DISMISSED** without prejudice.

This application is being forwarded to the National Stage Processing Branch of the International Division for further processing in accordance with this decision, including the mailing of a NOTIFICATION OF MISSING REQUIREMENTS UNDER 35 U.S.C. 371 (Form PCT/DO/EO/905) indicating that a Sequence Listing in a computer readable form, an oath or declaration in compliance with 37 CFR 1.497, and any required surcharges are required.

Any further correspondence with respect to this matter may be filed electronically via EFS-Web selecting the document description "Petition for review and processing by the PCT Legal Office" or by mail addressed to Mail Stop PCT, Commissioner for Patents, Office of PCT Legal Administration, P.O. Box 1450, Alexandria, Virginia 22313-1450, with the contents of the letter marked to the attention of the Office of PCT Legal Administration.

Richard R. Cole
Senior PCT Legal Examiner
Office of PCT Legal Administration

(571) 272-3281

14 OCT 2010

UNITED STATES PATENT and TRADEMARK OFFICE

COMMISSIONER FOR PATENTS
UNITED STATES PATENT AND TRADEMARK OFFICE
P.O BOX 1450
ALEXANDRIA, VA 22313-1450
www.uspto.gov

LIFE TECHNOLOGIES CORPORATION
C/O INTELLEVATE
P.O. BOX 52050
MINNEAPOLIS MN 55402

In re Application of	:	
ELLIS et al	:	
Application No.: 12/601,751	:	
PCT No.: PCT/EP2008/056645	:	
Int. Filing Date: 29 May 2008	:	DECISION
Priority Date: 29 May 2007	:	
Attorney Docket No.: IVGN 970 US	:	
For: A MAGNETIC SEPARATION RACK	:	

This decision is in response to applicants' "PETITION UNDER 37 CFR 1.182," filed on 06 August 2010 indicating that the executed declaration filed on 02 October 2009 contains the correct names of the first co-inventor's name, Darren James ELLIS, and of the third co-inventor's name, Jeremy MUNDY. The petition fee under 37 CFR 1.182 of $400.00 has been charged to petitioner's Deposit Account No.: 50-3994.

BACKGROUND

On 24 November 2009, applicants filed in the United States Patent and Trademark Office (PTO) a Transmittal Letter (Form PTO-1390) accompanied by, *inter alia*, the basic national fee, but no executed declaration was filed at that time.

On 30 March 2010, the United States Designated/Elected Office (DO/EO/US) mailed a "NOTIFICATION OF MISSING REQUIREMENTS UNDER 35 U.S.C. 371 IN THE UNITED STATES DESIGNATED/ELECTED OFFICE (DO/EO/US)" (Form PCT/DO/EO/905).

On 25 June 2010, applicants filed an executed declaration.

On 14 July 2010, the United States Designated/Elected Office (DO/EO/US) mailed a "NOTIFICATION OF DEFECTIVE RESPONSE" (Form PCT/DO/EO/916).

On 06 August 2010, applicants submitted the current petition stating that the correct name of the first co-inventor is Darren **James** ELLIS and correct name of the third co-inventor is **Jeremy** MUNDY as indicated in the submitted declaration, and not as published in the International application.

DISCUSSION

The correct names of the first co-inventor and third co-inventor are as filed in the executed declaration on 25 June 2010 as Darren **James** ELLIS and **Jeremy** MUNDY, and not as published in the international application. Accordingly, the correct names now appears in the declaration as filed on 25 June 2010 to the USPTO.

For the reasons above, the application may enter into national stage processing at this time.

DECISION

For the reasons above, the petition under 37 CFR 1.182 is **GRANTED** that the correct names is for the first co-inventor is Darren **James** ELLIS and third co-inventor is **Jeremy** MUNDY.

This application is being returned to the United States Designated/Elected Office (DO/EO/US) for continued processing.

Rafael Bacares
PCT Legal Examiner
PCT Legal Office
Telephone: (571) 272-3276
Facsimile: (571) 273-0459

UNITED STATES PATENT AND TRADEMARK OFFICE

UNITED STATES DEPARTMENT OF COMMERCE
United States Patent and Trademark Office
Address: COMMISSIONER FOR PATENTS
P.O. Box 1450
Alexandria, Virginia 22313-1450
www.uspto.gov

BIB DATA SHEET

CONFIRMATION NO. 9847

SERIAL NUMBER	FILING or 371(c) DATE	CLASS	GROUP ART UNIT	ATTORNEY DOCKET NO.
12/601,757	12/21/2009 RULE	514	1628	22941-0019US1

APPLICANTS

Istvan Laszlovsky, Budapest, HUNGARY;
Gyorgy Nemeth, Debrecen, HUNGARY;
Gyorgy Andor, Budapest, HUNGARY;

**** CONTINUING DATA ******************************

This application is a 371 of PCT/HU2008/000051 05/19/2008

**** FOREIGN APPLICATIONS ******************************

HUNGARY P0700369 05/24/2007

**** IF REQUIRED, FOREIGN FILING LICENSE GRANTED ****

04/27/2010

Foreign Priority claimed ☑ Yes ☐ No 35 USC 119(a-d) conditions met ☑ Yes ☐ No Verified and Acknowledged /JENNIFER M KIM/ Examiner's Signature	☐ Met after Allowance Initials	STATE OR COUNTRY	SHEETS DRAWINGS	TOTAL CLAIMS	INDEPENDENT CLAIMS
		HUNGARY	0	33	2

ADDRESS

FISH & RICHARDSON P.C. (TC)
PO BOX 1022
MINNEAPOLIS, MN 55440-1022
UNITED STATES

TITLE

(THIO) -CARBAMOYL-CYCLOHEXANE DERIVATIVES AND METHOD FOR TREATING SCHIZOPHRENIA

FILING FEE RECEIVED		
1786	FEES: Authority has been given in Paper No._____ to charge/credit DEPOSIT ACCOUNT No._____ for following:	☐ All Fees ☐ 1.16 Fees (Filing) ☐ 1.17 Fees (Processing Ext. of time) ☐ 1.18 Fees (Issue) ☐ Other _____ ☐ Credit

UNITED STATES PATENT AND TRADEMARK OFFICE

Commissioner for Patents
United States Patent and Trademark Office
P.O. Box 1450
Alexandria, VA 22313-1450
www.uspto.gov

Decision Date : February 13, 2012

In re Application of :

Arjun Srinivas

Application No : 12601869

Filed : 28-May-2010

Attorney Docket No : INND-001/02US 314287-2003

DECISION ON REQUEST TO WITHDRAW AS ATTORNEY/AGENTOF RECORD

This is an electronic decision on the Request to Withdraw as attorney or agent of record under 37 CFR § 1.36(b), filed February 13, 2012

The request is **APPROVED.**

The request was signed by William S. Galliani (registration no. 33885) on behalf of all attorneys/agents associated with Customer Number 58249 . All attorneys/agents associated with Cusotmer Number 58249 have been withdrawn.

Since there are no remaining attorneys of record, all future communications from the Office will be directed to the first named inventor or assignee that has properly made itself of record pursuant to 37 CFR 3.71, with correspondence address:

Name	Innova Dynamics, Inc.,
Name2	
Address 1	1700 Owens St., Suite 240
Address 2	
City	San Francisco
State	CA
Postal Code	94158
Country	US

As a reminder, requester is required to inform the first named inventor or assignee that has properly made itself of record pursuant to 37 CFR 3.71 of the electronically processed petition.

Telephone inquiries concerning this decision should be directed to the Patent Electronic Business Center (EBC) at 866-217-9197.

Office of Petitions

Doc Code: PET.AUTO **Document Description: Petition automatically granted by EFS-Web**	PTO/SB/83 U.S. Patent and Trademark Office Department of Commerce

Electronic Petition Request	**REQUEST FOR WITHDRAWAL AS ATTORNEY OR AGENT AND CHANGE OF CORRESPONDENCE ADDRESS**
Application Number	12601869
Filing Date	28-May-2010
First Named Inventor	Arjun Srinivas
Art Unit	1712
Examiner Name	ALEXANDER WEDDLE
Attorney Docket Number	INND-001/02US 314287-2003
Title	SURFACES HAVING PARTICLES AND RELATED METHODS

◉ Please withdraw me as attorney or agent for the above identified patent application and the practitioners of record associated with Customer Number: 58249

The reason(s) for this request are those described in 37 CFR:

10.40(b)(4)

Certifications

☒ I/We have given reasonable notice to the client, prior to the expiration of the response period, that the practitioner(s) intend to withdraw from employment

☒ I/We have delivered to the client or a duly authorized representative of the client all papers and property (including funds) to which the client is entitled

☒ I/We have notified the client of any responses that may be due and the time frame within which the client must respond

Change the correspondence address and direct all future correspondence to the first named inventor or assignee that has properly made itself of record pursuant to 37 CFR 3.71:

Name	Innova Dynamics, Inc.,
Address	1700 Owens St., Suite 240
City	San Francisco
State	CA
Postal Code	94158
Country	US

I am authorized to sign on behalf of myself and all withdrawing practitioners.	
Signature	/William S. Galliani/
Name	William S. Galliani
Registration Number	33885

United States Patent and Trademark Office

Commissioner for Patents
United States Patent and Trademark Office
P.O. Box 1450
Alexandria, VA 22313-1450
www.uspto.gov

RABIN & BERDO, PC
1101 14TH STREET, NW
SUITE 500
WASHINGTON DC 20005

MAILED

NOV 01 2010

PCT LEGAL ADMINISTRATION

In re Application of	:	
Wang et al.	:	
Application No. 12/601,906	:	
PCT No.: PCT/CN2007/001135	:	
Int. Filing Date: 09 April 2007	:	DECISION
Priority Date: 10 April 2006	:	
Att. Docket No.: SHOU-146NP	:	
For: Griddle With Adjustable Space	:	
Between Upper And Lower Pans	:	

This is in response to the "Supplemental Statement of Inventor Names" filed on 03 August 2010.

In a Decision mailed on 19 July 2010, counsel was advised that

> Counsel also states that "Xincong Wang" "is the same as" "Hsin Tsung Wang," explaining that one version is the "Chinese name" and the second is the "Taiwanese name." It is not clear whether counsel means to imply that this discrepancy represents a transliteration error, or some other type of error. Further clarification is required.

In response, petitioner indicates characterizes the discrepancy by stating that "They are simply two different versions of the same name, much like Catherine, Katherine and Kathryn are the same names. The mistake explained above represents a minor clerical error..." Counsel does not appear to take the position that the discrepancy arose from a mere typographical error or phonetic misspelling, but instead that an error was made in using a different version of the name. Under the policy described at MPEP 605.04(b) and (c), resolution of a discrepancy of this type requires a formal petition under 37 CFR 1.182. By way of explanation, using counsel's example, substitution of "Katherine" for "Catherine" or "Kathryn" would require a petition under 37 CFR 1.182, even if the wrong version was used inadvertently.

The Decision mailed on 19 July 2010 set a period for response as follows:

> *Counsel is required to file a fully satisfactory response within **either** (1) the remaining period for response to the Form PCT/DO/EO/905 mailed on 02 March 2010, as extended under 37 CFR 1.136(a), **or** (2) **ONE MONTH** from the mailing date of this decision (**NOT** extendable), whichever expires later. This period for response is analogous to that which would be set by a Notification of Defective Response (Form PCT/DO/EO/916). Failure to timely reply will result in **ABANDONMENT.***

Insofar as counsel has not provided either a statement that the discrepancy arose from a typographical or transliteration error, or a petition under 37 CFR 1.182, within the period for response, this international application is regarded as **ABANDONED** with respect to the national stage in the United States. Petitioner may wish to seek relief pursuant to 37 CFR 1.137(b).

DECISION

The declaration is **NOT ACCEPTED**, without prejudice.

Any further correspondence with respect to this matter may be filed electronically via EFS-Web selecting the document description "Petition for review and processing by the PCT Legal Office" or by mail addressed to Mail Stop PCT, Commissioner for Patents, Office of PCT Legal Administration, P.O. Box 1450, Alexandria, Virginia 22313-1450, with the contents of the letter marked to the attention of the Office of PCT Legal Administration.

/George Dombroske/
George Dombroske
PCT Legal Examiner
Office of PCT Legal Administration
Tel: (571) 272-3283

United States Patent and Trademark Office

Commissioner for Patents
United States Patent and Trademark Office
P.O. Box 1450
Alexandria, VA 22313-1450
www.uspto.gov

MAILED

JAN 18 2011

PCT LEGAL ADMINISTRATION

RABIN & BERDO, PC
1101 14TH STREET, NW
SUITE 500
WASHINGTON DC 20005

In re Application of
Wang et al.
Application No. 12/601,906
PCT No.: PCT/CN2007/001135
Int. Filing Date: 09 April 2007
Priority Date: 10 April 2006
Att. Docket No.: SHOU-146NP
For: Griddle With Adjustable Space Between Upper And Lower Pans

DECISION

This is in response to the petition under 37 CFR 1.182 filed on 17 November 2010.

DISCUSSION

In a Decision mailed on 01 November 2010, counsel was advised that

> ... petitioner indicates characterizes the discrepancy by stating that "They are simply two different versions of the same name, much like Catherine, Katherine and Kathryn are the same names. The mistake explained above represents a minor clerical error..." Counsel does not appear to take the position that the discrepancy arose from a mere typographical error or phonetic misspelling, but instead that an error was made in using a different version of the name. Under the policy described at MPEP 605.04(b) and (c), resolution of a discrepancy of this type requires a formal petition under 37 CFR 1.182. By way of explanation, using counsel's example, substitution of "Katherine" for "Catherine" or "Kathryn" would require a petition under 37 CFR 1.182, even if the wrong version was used inadvertently.

Petitioner was also advised that

> Insofar as counsel has not provided either a statement that the discrepancy arose from a typographical or transliteration error, or a petition under 37 CFR 1.182, within the period for response, this international application is regarded as **ABANDONED** with respect to the national stage in the United States. Petitioner may wish to seek relief pursuant to 37 CFR 1.137(b).

In response, applicants have now filed a petition under 37 CFR 1.182, accompanied by the requisite petition fee. However, since the international application has already become abandoned with respect to the national stage in the United States, it would not be appropriate to reach the merits of the petition under 37 CFR 1.182 at this time. Rather, applicants may wish to file, e.g., a petition under 37 CFR 1.137(b) in order to restore the application to pending status.

As a courtesy to applicants, it is noted that the petition itself appears merely to request a name change, without indicating within its four corners that the proposed new name refers to the same inventor who was named in the published international application. In addition, it is

recommended that applicants provide a statement (if appropriate) made on the basis of first-hand knowledge, indicating that both versions of the name refer to the same inventor and describing the circumstances underlying the discrepancy.

DECISION

The petition is **DISMISSED**, without prejudice.

Any request for reconsideration must be filed within **TWO (2) MONTHS** of the mailing date of this Decision. Extensions of time are available under 37 CFR 1.136(a).

Any further correspondence with respect to this matter may be filed electronically via EFS-Web selecting the document description "Petition for review and processing by the PCT Legal Office" or by mail addressed to Mail Stop PCT, Commissioner for Patents, Office of PCT Legal Administration, P.O. Box 1450, Alexandria, Virginia 22313-1450, with the contents of the letter marked to the attention of the Office of PCT Legal Administration.

/George Dombroske/
George Dombroske
PCT Legal Examiner
Office of PCT Legal Administration
Tel: (571) 272-3283

United States Patent and Trademark Office

Commissioner for Patents
United States Patent and Trademark Office
P.O. Box 1450
Alexandria, VA 22313-1450
www.uspto.gov

MAILED

MAY 20 2011

PCT LEGAL ADMINISTRATION

RABIN & BERDO, PC
1101 14TH STREET, NW
SUITE 500
WASHINGTON DC 20005

In re Application of :
Wang et al. :
Application No. 12/601,906 :
PCT No.: PCT/CN2007/001135 :
Int. Filing Date: 09 April 2007 : DECISION
Priority Date: 10 April 2006 :
Att. Docket No.: SHOU-146NP :
For: Griddle With Adjustable Space :
Between Upper And Lower Pans :

This is in response to the renewed petition under 37 CFR 1.182 and the petition under 37 CFR 1.137(b) filed on 18 March 2011.

DISCUSSION

Petition Under 37 CFR 1.137(b)

The petition to revive under 37 CFR 1.137(b)is hereby **DISMISSED, without prejudice,** as follows:

Petitioner states that "the entire delay in filing the required reply from the due date for the reply until the filing of a grantable petition pursuant to 37 C.F.R. 1.137(b) was unintentional." Said statement is being accepted in satisfaction of 37 CFR 1.137(b)(3). A review of the application file reveals that applicant has paid the petition fee. No terminal disclaimer is required.

This international application became abandoned with respect to the national stage in the United States for failure to timely file an oath or declaration compliant with 37 CFR 1.497(a) and (b)(or an acceptable statement or petition under 37 CFR 1.182 rendering the declaration of record acceptable). Though applicants have filed a petition under 37 CFR 1.182, that petition is not grantable for the reasons described below. As such, it would not be appropriate to conclude that the "required reply" has been satisfied at this time. This requirement may be overcome by submitting either an acceptable oath or declaration or a grantable petition under 37 CFR 1.182 as discussed below.

Petition Under 37 CFR 1.182

In a Decision mailed on 18 January 2011, counsel was advised that

> ... it is noted that the petition itself appears merely to request a name change, without indicating within its four corners that the proposed new name refers to the same inventor who was named in the published international application. In addition, it is recommended that applicants provide a statement (if appropriate) made on the basis of first-hand knowledge, indicating that both versions of the

name refer to the same inventor and describing the circumstances underlying the discrepancy.

In response, applicants have provided what appears to be essentially a *pro forma* petition which does not itself demonstrate that the inventor named in the published international application is the same person who is nominated in the declaration. Petitioner previously has argued that "Hsin Tsung Wang" and "Xincong Wang" are merely different versions of the same name, but no first-hand statement (pereferably by the inventor) attesting to the relevant facts has been provided. As such, it would not be appropriate to accept the inventor's name as it appears on the declaration, on the basis of the present record.

DECISION

The petition under 37 CFR 1.137(b) is **DISMISSED**, without prejudice.

The petition under 37 CFR 1.182 is **DISMISSED**, without prejudice.

Any request for reconsideration must be filed within **TWO (2) MONTHS** of the mailing date of this Decision. Extensions of time are available under 37 CFR 1.136(a).

Any further correspondence with respect to this matter may be filed electronically via EFS-Web selecting the document description "Petition for review and processing by the PCT Legal Office" or by mail addressed to Mail Stop PCT, Commissioner for Patents, Office of PCT Legal Administration, P.O. Box 1450, Alexandria, Virginia 22313-1450, with the contents of the letter marked to the attention of the Office of PCT Legal Administration.

/George Dombroske/
George Dombroske
PCT Legal Examiner
Office of PCT Legal Administration
Tel: (571) 272-3283

UNITED STATES PATENT AND TRADEMARK OFFICE

Commissioner for Patents
United States Patent and Trademark Office
P.O. Box 1450
Alexandria, VA 22313-1450
www.uspto.gov

RABIN & BERDO, PC
1101 14TH STREET, NW
SUITE 500
WASHINGTON DC 20005

MAILED

SEP 26 2011

PCT LEGAL ADMINISTRATION

In re Application of
Wang et al.
Application No. 12/601,906
PCT No.: PCT/CN2007/001135
Int. Filing Date: 09 April 2007
Priority Date: 10 April 2006
Att. Docket No.: SHOU-146NP
For: Griddle With Adjustable Space Between Upper And Lower Pans

DECISION

This is in response to the renewed petition under 37 CFR 1.182 and the renewed petition under 37 CFR 1.137(b) filed on 20 July 2011.

DISCUSSION

Petition Under 37 CFR 1.137(b)

The petition to revive under 37 CFR 1.137(b)is hereby **DISMISSED, without prejudice,** as follows:

Petitioner states that "the entire delay in filing the required reply from the due date for the reply until the filing of a grantable petition pursuant to 37 C.F.R. 1.137(b) was unintentional." Said statement is being accepted in satisfaction of 37 CFR 1.137(b)(3). A review of the application file reveals that applicant has paid the petition fee. No terminal disclaimer is required.

This international application became abandoned with respect to the national stage in the United States for failure to timely file an oath or declaration compliant with 37 CFR 1.497(a) and (b)(or an acceptable statement or petition under 37 CFR 1.182 rendering the declaration of record acceptable). Though applicants have filed a petition under 37 CFR 1.182, that petition is not grantable for the reasons described below. As such, it would not be appropriate to conclude that the "required reply" has been satisfied at this time. This requirement may be overcome by submitting either an acceptable oath or declaration or a grantable petition under 37 CFR 1.182 as discussed below.

Peti tion Under 37 CFR 1.182

In a Decision mailed on 20 May 2011, counsel was advised that

> ...applicants have provided what appears to be essentially a *pro forma* petition which does not itself demonstrate that the inventor named in the published international application is the same person who is nominated in the declaration. Petitioner previously has argued that "Hsin Tsung Wang" and "Xincong Wang" are merely different versions of the same name, but no first-hand statement (pereferably by the inventor) attesting to the relevant facts has been provided. As

such, it would not be appropriate to accept the inventor's name as it appears on the declaration, on the basis of the present record.

In response, petitioner has explained the equivalency of "Xincong Wang" and "Hsin Tsung Wang" as "merely two different spellings of the same name. When Chinese characters are transliterated to English letters several results are possible..." Petitioner has also presented a copy of a page of a Republic of China passport issued to "WANG, HSIN-TSUNG," as well as translation site print-outs. Petitioner has also provided a "verification of translation" with an improper S-signature by Tracy Zhang "on behalf of Hsin Tsung Wang." Petitioner has not addressed the capacity in which Ms. Zhang seeks to sign on the inventor's behalf, nor explained why the inventor himself is unavailable to sign. Given that counsel was able to obtain access to a copy of the inventor's passport, it is not clear whether or why the inventor was not available to simply sign the statement himself.

DECISION

The petition under 37 CFR 1.137(b) is **DISMISSED**, without prejudice.

The petition under 37 CFR 1.182 is **DISMISSED**, without prejudice.

Any request for reconsideration must be filed within **TWO (2) MONTHS** of the mailing date of this Decision. Extensions of time are available under 37 CFR 1.136(a).

Any further correspondence with respect to this matter may be filed electronically via EFS-Web selecting the document description "Petition for review and processing by the PCT Legal Office" or by mail addressed to Mail Stop PCT, Commissioner for Patents, Office of PCT Legal Administration, P.O. Box 1450, Alexandria, Virginia 22313-1450, with the contents of the letter marked to the attention of the Office of PCT Legal Administration.

/George Dombroske/
George Dombroske
PCT Legal Examiner
Office of PCT Legal Administration
Tel: (571) 272-3283

UNITED STATES PATENT AND TRADEMARK OFFICE

Commissioner for Patents
United States Patent and Trademark Office
P.O. Box 1450
Alexandria, VA 22313-1450
www.uspto.gov

RABIN & BERDO, PC
1101 14TH STREET, NW
SUITE 500
WASHINGTON DC 20005

MAILED

JAN 06 2012

PCT LEGAL ADMINISTRATION

In re Application of :
Wang et al. :
Application No. 12/601,906 :
PCT No.: PCT/CN2007/001135 :
Int. Filing Date: 09 April 2007 : DECISION
Priority Date: 10 April 2006 :
Att. Docket No.: SHOU-146NP :
For: Griddle With Adjustable Space :
Between Upper And Lower Pans :

This is in response to the renewed petition under 37 CFR 1.182 and the renewed petition under 37 CFR 1.137(b) filed on 08 November 2011.

DISCUSSION

Petition Under 37 CFR 1.137(b)

In the Decision mailed on 26 September 2011, the renewed petition to revive under 37 CFR 1.137(b) filed on 20 July 2011 was dismissed, without prejudice, because

> This international application became abandoned with respect to the national stage in the United States for failure to timely file an oath or declaration compliant with 37 CFR 1.497(a) and (b)(or an acceptable statement or petition under 37 CFR 1.182 rendering the declaration of record acceptable). Though applicants have filed a petition under 37 CFR 1.182, that petition is not grantable for the reasons described below. As such, it would not be appropriate to conclude that the "required reply" has been satisfied at this time. This requirement may be overcome by submitting either an acceptable oath or declaration or a grantable petition under 37 CFR 1.182 as discussed below.

In view of the fact that the instant renewed petition under 37 CFR 1.182 has been granted, and consequently the declaration of record has been accepted under 37 CFR 1.497(a) and (b), it now would be appropriate to regard the "required reply" as having been filed. Therefore, all of the requirements for revival under 37 CFR 1.137(b) now have been satisfied.

Petition Under 37 CFR 1.182

In a Decision mailed on 26 September 2011, it was observed that

> In response, petitioner has explained the equivalency of "Xincong Wang" and "Hsin Tsung Wang" as "merely two different spellings of the same name. When Chinese characters are transliterated to English letters several results are possible..." Petitioner has also presented a copy of a page of a Republic of China passport issued to "WANG, HSIN-TSUNG," as well as translation site print-outs. Petitioner has also provided a "verification of translation" with an improper S-

signature by Tracy Zhang "on behalf of Hsin Tsung Wang." Petitioner has not addressed the capacity in which Ms. Zhang seeks to sign on the inventor's behalf, nor explained why the inventor himself is unavailable to sign. Given that counsel was able to obtain access to a copy of the inventor's passport, it is not clear whether or why the inventor was not available to simply sign the statement himself.

In response, petitioner now has provided an appropriate statement signed by Hsin Tsung Wang. In view of the totality of the present record, it would be appropriate to accept the inventor's name as it appears on the declaration filed on 25 November 2009. Consequently, it would be appropriate to accept said declaration for purposes of compliance with 37 CFR 1.497(a) and (b).

DECISION

The petition under 37 CFR 1.137(b) is **GRANTED**.

The petition under 37 CFR 1.182 is **GRANTED**.

This application is being returned to the Office of Patent Application Processing. Its date under 35 U.S.C. 371(c)(1), (2) and (4) is **25 November 2009.**

/George Dombroske/
George Dombroske
PCT Legal Examiner
Office of PCT Legal Administration
Tel: (571) 272-3283

PTO/SB/20PCT-KR (06-10)
Approved for use through 01/31/2012. OMB 0651-0058
U.S. Patent and Trademark Office; U. S. DEPARTMENT OF COMMERCE
Under the Paperwork Reduction Act of 1995, no persons are required to respond to a collection of information unless it displays a valid OMB control number.

REQUEST FOR PARTICIPATION IN THE PATENT COOPERATION TREATY - PATENT PROSECUTION HIGHWAY (PCT-PPH) PILOT PROGRAM BETWEEN THE KOREAN INTELLECTUAL PROPERTY OFFICE (KIPO) AND THE USPTO

Application No:	12601912	Filing date:	11-25-2009
First Named Inventor:	HSU		
Title of the Invention:	Preparation of Fatty Acids in Solid Form		

THIS REQUEST FOR PARTICIPATION IN THE PCT-PPH PILOT PROGRAM ALONG WITH THE REQUIRED DOCUMENTS MUST BE SUBMITTED VIA EFS-WEB. INFORMATION REGARDING EFS-WEB IS AVAILABLE AT HTTP://WWW.USPTO.GOV/EBC/EFS_HELP.HTML

APPLICANT HEREBY REQUESTS PARTICIPATION IN THE PCT-PPH PROGRAM AND PETITIONS TO MAKE THE ABOVE-IDENTIFIED APPLICATION SPECIAL UNDER THE PCT-PPH PROGRAM.

The above-identified application is (1) a national stage entry of the corresponding PCT application, or (2) a national stage entry of another PCT application which claims priority to the corresponding PCT application, or (3) a national application that claims domestic/ foreign priority to the corresponding PCT application, or (4) a national application which forms the basis for the priority claim in the corresponding PCT application, or (5) a continuing application of a U.S. application that satisfies one of (1) to (4) above, or (6) a U.S. application that claims domestic benefit to a U.S. provisional application which forms the basis for the priority claim in the corresponding PCT application.

The corresponding PCT application number(s) is/are: PCT/US08/74572

The international filing date of the corresponding PCT application(s) is/are: 08-28-2008

I. List of Required Documents:

a. **A copy of the latest international work product (WO/ISA, WO/IPEA, or IPER) in the above–identified corresponding PCT application(s)**

- [x] Is attached.
- [ ] Is not attached because the document is already in the U.S. application.

b. **A copy of all claims which were indicated as having novelty, inventive step and industrial applicability in the above-identified corresponding PCT application(s).**

- [ ] Is attached.
- [x] Is not attached because the document is already in the U.S. application.

c. **English translations of the documents in a. and b. above are attached (if the documents are not in the English language). A statement that the English translation is accurate is attached for the document in b. above.**

This collection of information is required by 35 U.S.C. 119, 37 CFR 1.55, and 37 CFR 1.102(d). The information is required to obtain or retain a benefit by the public, which is to file (and by the USPTO to process) an application. Confidentiality is governed by 35 U.S.C. 122 and 37 CFR 1.11 and 1.14. This collection is estimated to take 2 hours to complete, including gathering, preparing, and submitting the completed application form to the USPTO. Time will vary depending upon the individual case. Any comments on the amount of time you require to complete this form and/or suggestions for reducing this burden should be sent to the Chief Information Officer, U.S. Patent and Trademark Office, U.S. Department of Commerce, P.O. Box 1450, Alexandria, VA 22313-1450. DO NOT SEND FEES OR COMPLETED FORMS TO THIS ADDRESS.

Approved for use through 01/31/2012. OMB 0651-0058
U.S.Patent and Trademark Office; U.S. DEPARTMENT OF COMMERCE
Under the Paperwork Reduction Act of 1995, no persons are required to respond to a collection of information unless it displays a valid OMB control number.

REQUEST FOR PARTICIPATION IN THE PCT-PPH PILOT PROGRAM BETWEEN THE KIPO AND THE USPTO

(continued)

Application No.:	12601912
First Named Inventor:	HSU

d. **(1) An information disclosure statement listing the documents cited in the international work products (ISR, WO/ISA, WO/IPEA, IPER) of the corresponding PCT application.**

☐ Is attached

☑ Has already been filed in the above-identified U.S. application on 11-25-2009

(2) Copies of all documents (except) for U.S. patents or U.S. patent application publications)

☐ Are attached.

☐ Have already been filed in the above-identified U.S. application on _____

II. Claims Correspondence Table:

Claims in US Application	Patentable Claims in the corresponding PCT Application	Explanation regarding the correspondence

III. All the claims in the US application sufficiently correspond to the patentable claims in the corresponding PCT application.

Signature /rdc/	Date 02-23-2011
Name (Print/Typed) Ralph D. Chabot	Registration Number 39133

Privacy Act Statement

The **Privacy Act of 1974 (P.L. 93-579)** requires that you be given certain information in connection with your submission of the attached form related to a patent application or patent. Accordingly, pursuant to the requirements of the Act, please be advised that: (1) the general authority for the collection of this information is 35 U.S.C. 2(b)(2); (2) furnishing of the information solicited is voluntary; and (3) the principal purpose for which the information is used by the U.S. Patent and Trademark Office is to process and/or examine your submission related to a patent application or patent. If you do not furnish the requested information, the U.S. Patent and Trademark Office may not be able to process and/or examine your submission, which may result in termination of proceedings or abandonment of the application or expiration of the patent.

The information provided by you in this form will be subject to the following routine uses:

1. The information on this form will be treated confidentially to the extent allowed under the Freedom of Information Act (5 U.S.C. 552) and the Privacy Act (5 U.S.C 552a). Records from this system of records may be disclosed to the Department of Justice to determine whether disclosure of these records is required by the Freedom of Information Act.
2. A record from this system of records may be disclosed, as a routine use, in the course of presenting evidence to a court, magistrate, or administrative tribunal, including disclosures to opposing counsel in the course of settlement negotiations.
3. A record in this system of records may be disclosed, as a routine use, to a Member of Congress submitting a request involving an individual, to whom the record pertains, when the individual has requested assistance from the Member with respect to the subject matter of the record.
4. A record in this system of records may be disclosed, as a routine use, to a contractor of the Agency having need for the information in order to perform a contract. Recipients of information shall be required to comply with the requirements of the Privacy Act of 1974, as amended, pursuant to 5 U.S.C. 552a(m).
5. A record related to an International Application filed under the Patent Cooperation Treaty in this system of records may be disclosed, as a routine use, to the International Bureau of the World Intellectual Property Organization, pursuant to the Patent Cooperation Treaty.
6. A record in this system of records may be disclosed, as a routine use, to another federal agency for purposes of National Security review (35 U.S.C. 181) and for review pursuant to the Atomic Energy Act (42 U.S.C. 218(c)).
7. A record from this system of records may be disclosed, as a routine use, to the Administrator, General Services, or his/her designee, during an inspection of records conducted by GSA as part of that agency's responsibility to recommend improvements in records management practices and programs, under authority of 44 U.S.C. 2904 and 2906. Such disclosure shall be made in accordance with the GSA regulations governing inspection of records for this purpose, and any other relevant (*i.e.*, GSA or Commerce) directive. Such disclosure shall not be used to make determinations about individuals.
8. A record from this system of records may be disclosed, as a routine use, to the public after either publication of the application pursuant to 35 U.S.C. 122(b) or issuance of a patent pursuant to 35 U.S.C. 151. Further, a record may be disclosed, subject to the limitations of 37 CFR 1.14, as a routine use, to the public if the record was filed in an application which became abandoned or in which the proceedings were terminated and which application is referenced by either a published application, an application open to public inspection or an issued patent.
9. A record from this system of records may be disclosed, as a routine use, to a Federal, State, or local law enforcement agency, if the USPTO becomes aware of a violation or potential violation of law or regulation.

UNITED STATES PATENT AND TRADEMARK OFFICE

UNITED STATES DEPARTMENT OF COMMERCE
United States Patent and Trademark Office
Address: COMMISSIONER FOR PATENTS
P.O. Box 1450
Alexandria, Virginia 22313-1450
www.uspto.gov

APPLICATION NO.	FILING DATE	FIRST NAMED INVENTOR	ATTORNEY DOCKET NO.	CONFIRMATION NO.
12/601,912	11/25/2009	Hsinhung John Hsu	6517-0906	1025

24936 7590 05/23/2011
RALPH D CHABOT
2310 E PONDEROSA DR
SUITE 4
CAMARILLO, CA 93010-4747

EXAMINER
KATAKAM, SUDHAKAR

ART UNIT	PAPER NUMBER
1621	

NOTIFICATION DATE	DELIVERY MODE
05/23/2011	ELECTRONIC

Please find below and/or attached an Office communication concerning this application or proceeding.

The time period for reply, if any, is set in the attached communication.

Notice of the Office communication was sent electronically on above-indicated "Notification Date" to the following e-mail address(es):

rdc@chabotlaw.com

UNITED STATES PATENT AND TRADEMARK OFFICE

Commissioner for Patents
United States Patent and Trademark Office
P.O. Box 1450
Alexandria, VA 22313-1450
www.uspto.gov

MAY 2 3 2011

RALPH D CHABOT
2310 E PONDEROSA DR SUITE 4
CAMARILLO, CA 93010-4747

In re Application of	:	DECISION ON REQUEST TO
HSU ET AL.	:	PARTICIPATE IN PATENT
Application No. 12/601,912	:	PROSECUTION HIGHWAY
Filed: November 25, 2009	:	PROGRAM AND PETITION
Attorney Docket No. 6517-0906	:	TO MAKE SPECIAL UNDER
	:	37 CFR 1.102(a)

This is a decision on the request to participate in the Patent Cooperation Treaty - Patent Prosecution Highway (PCT-PPH) program and the petition under 37 CFR 1.102(a), filed February 23, 2011, to make the above-identified application special.

The request and petition are **DISMISSED**.

A grantable request to participate in the PCT-PPH program and petition to make special require:

(1) The U.S. application is (1) a national stage entry of the corresponding PCT application, or (2) a national stage entry of another PCT application which claims priority to the corresponding PCT application, or (3) a national stage application that claims domestic/foreign priority to the corresponding PCT application, or (4) a national application which forms the basis for the priority claim in the corresponding PCT application, or (5) a continuing application of a U.S. application that satisfies one of (1) to (4) above, or (6) a U.S. application that claims domestic benefit to a U.S. provisional application which forms the basis for the priority claim in the corresponding PCT application;
(2) The latest work product in the international phase of the PCT application corresponding to the U.S. application, namely the WO/ISA, or the WO/IPEA, or the IPER, indicates at least one claim in the PCT application has novelty, inventive step and industrial applicability;
(3) All the claims in the U.S. application must sufficiently correspond or be amended to sufficiently correspond to one or more of those claims indicated as having novelty, inventive step and industrial applicability and free of any observation described in Box VIII in the latest work product of the corresponding PCT application;
(4) Examination of the U.S. application has not begun;
(5) Applicant must submit a copy of latest international work product, WO/ISA, or WO/IPEA or IPER, which indicated that the claim(s) has/have novelty, inventive step and industrial applicability along with an English translation thereof if the copy of the latest international work product is not in the English language;
(6) Applicant must submit the claims from the corresponding PCT application which were indicated as having novelty, inventive step and industrial applicability in the latest work product

of the PCT application along with an English translation thereof and a statement that the English translation is accurate if the claims are not in the English language;
(7) Applicant must submit a claim correspondence table in English; and
(8) Applicant must submit an IDS listing the documents cited in the international work products (ISR, WO/ISA, WO/IPEA, IPER) of the PCT application along with copies of documents except U.S. patents or U.S. patent application publications.

The request to participate in the PCT-PPH program and petition fails to comply with the requirement because:

(7) The claim correspondence table filed is blank; and

(8) Applicant has not submited an IDS listing the documents cited in the international work products (ISR, WO/ISA, WO/IPEA, IPER) of the PCT application along with copies of documents except U.S. patents or U.S. patent application publications.

Applicant is given a time period of **ONE MONTH or THIRTY DAYS**, whichever is longer, to correct the deficiencies. **NO EXTENSION OF TIME UNDER 37 CFR 1.136 IS PERMITTED.** If the deficiencies are not corrected with the time period given, the application will await action in its regular turn.

Response must be submitted via EFS-Web with the document description: Petition to make special under Patent Pros Hwy. Information regarding EFS-Web is available at http://www.uspto.gov/ebc/efs_help.html.

Telephone inquiries concerning this decision should be directed to Cecilia Tsang at 571-272-0562.

All other inquiries concerning the examination or status of the application should be directed to Patent Application Information Retrieval (PAIR) system.

Cecilia Tsang
Supervisory Patent Examiner
TC 1600

PTO/SB/20PCT-KR (06-10)
Approved for use through 01/31/2012. OMB 0651-0058
U.S. Patent and Trademark Office; U. S. DEPARTMENT OF COMMERCE
Under the Paperwork Reduction Act of 1995, no persons are required to respond to a collection of information unless it displays a valid OMB control number.

REQUEST FOR PARTICIPATION IN THE PATENT COOPERATION TREATY - PATENT PROSECUTION HIGHWAY (PCT-PPH) PILOT PROGRAM BETWEEN THE KOREAN INTELLECTUAL PROPERTY OFFICE (KIPO) AND THE USPTO

Application No:	12601912	Filing date:	11-25-2009
First Named Inventor:	HSU		
Title of the Invention:	Preparation of Fatty Acids in Solid Form		

THIS REQUEST FOR PARTICIPATION IN THE PCT-PPH PILOT PROGRAM ALONG WITH THE REQUIRED DOCUMENTS MUST BE SUBMITTED VIA EFS-WEB. INFORMATION REGARDING EFS-WEB IS AVAILABLE AT HTTP://WWW.USPTO.GOV/EBC/EFS_HELP.HTML

APPLICANT HEREBY REQUESTS PARTICIPATION IN THE PCT-PPH PROGRAM AND PETITIONS TO MAKE THE ABOVE-IDENTIFIED APPLICATION SPECIAL UNDER THE PCT-PPH PROGRAM.

The above-identified application is (1) a national stage entry of the corresponding PCT application, or (2) a national stage entry of another PCT application which claims priority to the corresponding PCT application, or (3) a national application that claims domestic/ foreign priority to the corresponding PCT application, or (4) a national application which forms the basis for the priority claim in the corresponding PCT application, or (5) a continuing application of a U.S. application that satisfies one of (1) to (4) above, or (6) a U.S. application that claims domestic benefit to a U.S. provisional application which forms the basis for the priority claim in the corresponding PCT application.

The corresponding PCT application number(s) is/are: PCT/US08/74572

The international filing date of the corresponding PCT application(s) is/are: 08-28-2008

I. List of Required Documents:

a. **A copy of the latest international work product (WO/ISA, WO/IPEA, or IPER) in the above–identified corresponding PCT application(s)**

- [x] Is attached.
- [ ] Is not attached because the document is already in the U.S. application.

b. **A copy of all claims which were indicated as having novelty, inventive step and industrial applicability in the above-identified corresponding PCT application(s).**

- [ ] Is attached.
- [x] Is not attached because the document is already in the U.S. application.

c. **English translations of the documents in a. and b. above are attached (if the documents are not in the English language). A statement that the English translation is accurate is attached for the document in b. above.**

This collection of information is required by 35 U.S.C. 119, 37 CFR 1.55, and 37 CFR 1.102(d). The information is required to obtain or retain a benefit by the public, which is to file (and by the USPTO to process) an application. Confidentiality is governed by 35 U.S.C. 122 and 37 CFR 1.11 and 1.14. This collection is estimated to take 2 hours to complete, including gathering, preparing, and submitting the completed application form to the USPTO. Time will vary depending upon the individual case. Any comments on the amount of time you require to complete this form and/or suggestions for reducing this burden should be sent to the Chief Information Officer, U.S. Patent and Trademark Office, U.S. Department of Commerce, P.O. Box 1450, Alexandria, VA 22313-1450. DO NOT SEND FEES OR COMPLETED FORMS TO THIS ADDRESS.

Approved for use through 01/31/2012. OMB 0651-0058
U.S.Patent and Trademark Office; U.S. DEPARTMENT OF COMMERCE
Under the Paperwork Reduction Act of 1995, no persons are required to respond to a collection of information unless it displays a valid OMB control number.

REQUEST FOR PARTICIPATION IN THE PCT-PPH PILOT PROGRAM BETWEEN THE KIPO AND THE USPTO

(continued)

Application No.:	12601912
First Named Inventor:	HSU

d. **(1) An information disclosure statement listing the documents cited in the international work products (ISR, WO/ISA, WO/IPEA, IPER) of the corresponding PCT application.**

- [✔] Is attached
- [ ] Has already been filed in the above-identified U.S. application on _____

(2) Copies of all documents (except) for U.S. patents or U.S. patent application publications)

- [ ] Are attached.
- [ ] Have already been filed in the above-identified U.S. application on _____

II. Claims Correspondence Table:

Claims in US Application	Patentable Claims in the corresponding PCT Application	Explanation regarding the correspondence
1-19	1-19	all claims are identical

III. All the claims in the US application sufficiently correspond to the patentable claims in the corresponding PCT application.

Signature /rdc/	Date 06-06-2011
Name (Print/Typed) Ralph D. Chabot	Registration Number 39133

Privacy Act Statement

The **Privacy Act of 1974 (P.L. 93-579)** requires that you be given certain information in connection with your submission of the attached form related to a patent application or patent. Accordingly, pursuant to the requirements of the Act, please be advised that: (1) the general authority for the collection of this information is 35 U.S.C. 2(b)(2); (2) furnishing of the information solicited is voluntary; and (3) the principal purpose for which the information is used by the U.S. Patent and Trademark Office is to process and/or examine your submission related to a patent application or patent. If you do not furnish the requested information, the U.S. Patent and Trademark Office may not be able to process and/or examine your submission, which may result in termination of proceedings or abandonment of the application or expiration of the patent.

The information provided by you in this form will be subject to the following routine uses:

1. The information on this form will be treated confidentially to the extent allowed under the Freedom of Information Act (5 U.S.C. 552) and the Privacy Act (5 U.S.C 552a). Records from this system of records may be disclosed to the Department of Justice to determine whether disclosure of these records is required by the Freedom of Information Act.
2. A record from this system of records may be disclosed, as a routine use, in the course of presenting evidence to a court, magistrate, or administrative tribunal, including disclosures to opposing counsel in the course of settlement negotiations.
3. A record in this system of records may be disclosed, as a routine use, to a Member of Congress submitting a request involving an individual, to whom the record pertains, when the individual has requested assistance from the Member with respect to the subject matter of the record.
4. A record in this system of records may be disclosed, as a routine use, to a contractor of the Agency having need for the information in order to perform a contract. Recipients of information shall be required to comply with the requirements of the Privacy Act of 1974, as amended, pursuant to 5 U.S.C. 552a(m).
5. A record related to an International Application filed under the Patent Cooperation Treaty in this system of records may be disclosed, as a routine use, to the International Bureau of the World Intellectual Property Organization, pursuant to the Patent Cooperation Treaty.
6. A record in this system of records may be disclosed, as a routine use, to another federal agency for purposes of National Security review (35 U.S.C. 181) and for review pursuant to the Atomic Energy Act (42 U.S.C. 218(c)).
7. A record from this system of records may be disclosed, as a routine use, to the Administrator, General Services, or his/her designee, during an inspection of records conducted by GSA as part of that agency's responsibility to recommend improvements in records management practices and programs, under authority of 44 U.S.C. 2904 and 2906. Such disclosure shall be made in accordance with the GSA regulations governing inspection of records for this purpose, and any other relevant (*i.e.*, GSA or Commerce) directive. Such disclosure shall not be used to make determinations about individuals.
8. A record from this system of records may be disclosed, as a routine use, to the public after either publication of the application pursuant to 35 U.S.C. 122(b) or issuance of a patent pursuant to 35 U.S.C. 151. Further, a record may be disclosed, subject to the limitations of 37 CFR 1.14, as a routine use, to the public if the record was filed in an application which became abandoned or in which the proceedings were terminated and which application is referenced by either a published application, an application open to public inspection or an issued patent.
9. A record from this system of records may be disclosed, as a routine use, to a Federal, State, or local law enforcement agency, if the USPTO becomes aware of a violation or potential violation of law or regulation.

UNITED STATES PATENT AND TRADEMARK OFFICE

UNITED STATES DEPARTMENT OF COMMERCE
United States Patent and Trademark Office
Address: COMMISSIONER FOR PATENTS
P.O. Box 1450
Alexandria, Virginia 22313-1450
www.uspto.gov

APPLICATION NO.	FILING DATE	FIRST NAMED INVENTOR	ATTORNEY DOCKET NO.	CONFIRMATION NO.
12/601,935	11/25/2009	Hiroyuki Nagahama	1163-0763PUS1	1181

2292 7590 06/03/2011
BIRCH STEWART KOLASCH & BIRCH
PO BOX 747
FALLS CHURCH, VA 22040-0747

EXAMINER
GHAYOUR, MOHAMMAD H

ART UNIT	PAPER NUMBER
2611	

NOTIFICATION DATE	DELIVERY MODE
06/03/2011	ELECTRONIC

Please find below and/or attached an Office communication concerning this application or proceeding.

The time period for reply, if any, is set in the attached communication.

Notice of the Office communication was sent electronically on above-indicated "Notification Date" to the following e-mail address(es):

mailroom@bskb.com

UNITED STATES PATENT AND TRADEMARK OFFICE

Commissioner for Patents
United States Patent and Trademark Office
P.O. Box 1450
Alexandria, VA 22313-1450
www.uspto.gov

BIRCH STEWART KOLASCH & BIRCH
PO BOX 747
FALLS CHURCH VA 22040-0747

In re Application of	:	
NAGAHAMA, HIROYUKI et al.	:	DECISION ON REQUEST TO
Application No. 12/601,935	:	PARTICIPATE IN PATENT
Filed: November 25, 2009	:	PROSECUTION HIGHWAY
Attorney Docket No. 1163-0763PUS1	:	PROGRAM AND PETITION
	:	TO MAKE SPECIAL UNDER
	:	37 CFR 1.102(a)

This is a decision on the request to participate in the Patent Prosecution Highway (PPH) program and the petition under 37 CFR 1.102(a), filed May 11, 2011 to make the above-identified application special.

The request and petition are **GRANTED**.

A grantable request to participate in the PPH program and petition to make special require:

(1) The U.S. application must validly claim priority under 35 U.S.C. 119(a) to one or more applications filed in the JPO;
(2) Applicant must submit a copy of the allowable/patentable claim(s) from the JPO application(s) along with an English translation thereof and a statement that the English translation is accurate;
(3) All the claims in the U.S. application must sufficiently correspond or be amended to sufficiently correspond to the allowable/patentable claim(s) in the JPO application(s);
(4) Examination of the U.S. application has not begun;
(5) Applicant must submit a copy of all the office actions from each of the JPO application(s) containing the allowable/patentable claim(s) along with an English translation thereof and a statement that the English translation is accurate; and
(6) Applicant must submit an IDS listing the documents cited by the JPO examiner in the JPO office action along with copies of documents except U.S. patents or U.S. patent application publications.

The request to participate in the PPH program and petition comply with the above requirements. Accordingly, the above-identified application has been accorded "special" status.

Telephone inquiries concerning this decision should be directed to Michael Horabik at 571-272-3068.

All other inquiries concerning the examination or status of the application should be directed to Patent Application Information Retrieval (PAIR) system.

The application is undergoing pre-examination processing. Once it is released for examination, the application will be forwarded to the examiner for action on the merits commensurate with this decision.

/Michael Horabik/

Michael Horabik
Quality Assurance Specialist
Technology Center 2600
Communications

UNITED STATES PATENT and TRADEMARK OFFICE

COMMISSIONER FOR PATENTS
UNITED STATES PATENT AND TRADEMARK OFFICE
P.O BOX 1450
ALEXANDRIA, VA 22313-1450
www.uspto.gov

JAMES P. HANRATH
191 NORTH WACKER DRIVE
SUITE 1800
CHICAGO IL 60606

MAILED
JAN 10 2011
PCT LEGAL ADMINISTRATION

In re Application of	:	DECISION ON
Smigelski et al	:	
Application No.: 12/601,981	:	
PCT No.: PCT/US08/65183	:	
Int. Filing Date: 30 May 2008	:	PETITION UNDER
Priority Date: 30 May 2007	:	
Attorney's Docket No.: 0006310.0003	:	
For: METHOD and DEVICE...	:	
INTEGRATED CIRCUIT	:	37 CFR 1.47(a)

This is in response to the "Response to Notification of Missing Requirements and Petition For Filing By Assignee" filed on 28 September 2010, which is being treated as a petition under 37 CFR 1.47(a). The petition fee of $200.00 has been paid.

BACKGROUND

On 30 May 2008, petitioner filed international application PCT/US2008/65183, which claimed priority to an earlier application filed 30 May 2007.

On 25 November 2009, petitioner filed in the United States Patent & Trademark Office a transmittal letter for entry into the national stage in the U.S. under 35 U.SC. 371, which was accompanied by, inter alia, the U.S. basic national fee. No executed oath or declaration accompanied the above papers.

On 29 March 2010, the United States Designated/Elected Office (DO/EO/US) mailed a "NOTIFICATION OF MISSING REQUIREMENTS UNDER 35 U.S.C. 371 IN THE UNITED STATES DESIGNATED/ELECTED OFFICE (DO/EO/US)" (Form PCT/DO/EO/905) which informed applicant, inter alia, that an "Oath or Declaration of the inventors, in compliance with 37 CFR 1.497(a), and (b), identifying the application by International application number and international filing date... Oath is not signed." The Notice indicate that all of the items set forth above must be submitted within two months from its mailing date or by 32 months from the priority date, whichever is later, in order to avoid abandonment of the national stage application.

On 28 September 2010, petitioner filed the present petition accompanied, inter alia, an affidavit by Dennis Cotner and an executed Declaration..

DISCUSSION

A petition under 37 CFR 1.47(a) must be accompanied by (1) the fee under 37 CFR 1.17(g), (2) factual proof that the missing joint inventor refuses to execute the application or cannot be reached after diligent effort, (3) a statement of the last known address of the missing inventor, and (4) an oath or declaration by each 37 CFR 1.47(a) applicant on his or her own behalf and on behalf of the non-signing joint inventor.

Furthermore, section 409.03(d) of the Manual of Patent Examining Procedure (M.P.E.P.) **Proof of Unavailability or Refusal**, the relevant sections states, in part:

> **REFUSAL TO JOIN:**
>
> A refusal by an inventor to sign an oath or declaration when the inventor has not been presented with the application papers does not itself suggest that the inventor is refusing to join the application unless it is clear that the inventor understands exactly what he or she is being asked to sign and refuses to accept the application papers. A copy of the application papers should be sent to the last known address of the nonsigning inventor, or, if the nonsigning inventor is represented by counsel, to the address of the nonsigning inventor's attorney. The fact that an application may contain proprietary information does not relieve the **37 CFR 1.47** applicant of the responsibility to present the application papers to the inventor if the inventor is willing to receive the papers in order to sign the oath or declaration. It is noted that the inventor may obtain a complete copy of the application, unless the inventor has assigned his or her interest in the application, and the assignee has requested that the inventor not be permitted access. See **MPEP § 106**. It is reasonable to require that the inventor be presented with the application papers before a petition under **37 CFR 1.47** is granted since such a procedure ensures that the inventor is apprised of the application to which the oath or declaration is directed. *In re Gray*, 115 USPQ 80 (Comm'r Pat. 1956).
>
> Where a refusal of the inventor to sign the application papers is alleged, the circumstances of the presentation of the application papers and of the refusal must be specified in a statement of facts by the person who presented the inventor with the application papers and/or to whom the refusal was made. Statements by a party not present when an oral refusal is made will not be accepted.
>
> Proof that a *bona fide* attempt was made to present a copy of the application papers (specification, including claims, drawings, and oath or declaration) to the nonsigning inventor for signature, but the inventor refused to accept delivery of the papers or expressly stated that the application papers should not be sent, may be sufficient. When there is an express oral refusal, that fact along with the time and place of the refusal must be stated in the statement of facts. When there is an express written

> refusal, a copy of the document evidencing that refusal must be made part of the statement of facts. The document may be redacted to remove material not related to the inventor's reasons for refusal.
>
> When it is concluded by the **37 CFR 1.47** applicant that a nonsigning inventor's conduct constitutes a refusal, all facts upon which that conclusion is based should be stated in the statement of facts in support of the petition or directly in the petition. If there is documentary evidence to support facts alleged in the petition or in any statement of facts, such evidence should be submitted. Whenever a nonsigning inventor gives a reason for refusing to sign the application oath or declaration, that reason should be stated in the petition.

Petitioner has satisfied items (1), (2) and (3) of 37 CFR 1.47(a). However, item (4) has not been satisfied.

Regarding item(1), petitioner has charged the proper fee of $200.00 under 37 CFR 1.17(g).

Regarding item (2), the averments of Dennis Cotner are sufficient to support a finding that the nonsigning inventor, Tom Smigelski refuses to sign because a copy of the patent application and declaration were sent to him on May 13, 2010 to his last known address. The package was received and signed for by Mr. Smigelski on May 17, 2010 and the receipt of the application papers was also acknowledged by Smigelski's attorney, Hanrath, on May 19, 2010, in which he stated that Mr. Smigelski had indicated that he had not signed the declaration.

Regarding requirement (3), petitioner has provided a statement of the last known address of the missing inventor in the petition.

Tom Smigelski
238 Waterford Dr.
Lake Zurich, Illinois 60047

Regarding item (4), petitioner has provided an improper declaration because the declaration does not comply 37 CFR 1.497(a)(3). A Declaration, under 37 CFR 1.497(a)(3), must identify each inventor. In this instance joint inventor, Tom Smigelski is not listed on the declaration. See MPEP § 602.

Consequently, the petition does not satisfy all the items under 37 CFR 1.47(a).

CONCLUSION

The petition under 37 CFR 1.47(a) is **DISMISSED** without prejudice.

If reconsideration of the merits of the petition under 37 CFR 1.47(a) is desired, applicant must file a request for reconsideration within **TWO (2) MONTHS** from the mail date of this Decision. Any reconsideration request should include a cover letter entitled "Renewed Petition Under 37 CFR 1.47(a)." Extensions of time are available under 37 CFR 1.136(a). Failure to timely file the proper response will result in ABANDONMENT.

Any further correspondence with respect to this matter may be filed electronically via EFS-Web selecting the document description "Petition for review and processing by the PCT Legal Office" or by mail addressed to Mail Stop PCT, Commissioner for Patents, Office of PCT Legal Administration, P.O. Box 1450, Alexandria, Virginia 22313-1450, with the contents of the letter marked to the attention of the Office of PCT Legal Administration.

Rafael Bacares
PCT Legal Examiner
PCT Legal Office
Telephone: (571) 272-3276
Facsimile: (571) 272-0459

UNITED STATES PATENT and TRADEMARK OFFICE

COMMISSIONER FOR PATENTS
UNITED STATES PATENT AND TRADEMARK OFFICE
P.O BOX 1450
ALEXANDRIA, VA 22313-1450
www.uspto.gov

MAILED
APR 12 2011
PCT LEGAL ADMINISTRATION

JAMES P. HANRATH
191 NORTH WACKER DRIVE
SUITE 1800
CHICAGO IL 60606

In re Application of	:	DECISION ON RENEWED
Smigelski et al	:	
Application No.: 12/601,981	:	
PCT No.: PCT/US08/65183	:	
Int. Filing Date: 30 May 2008	:	PETITION UNDER
Priority Date: 30 May 2007	:	
Attorney's Docket No.: 0006310.0003	:	
For: METHOD AND DEVICE...	:	
INTEGRATED CIRCUIT	:	37 CFR 1.47(a)

This is in response to the "REQUEST FOR RECONSIDERATION AND UNDER 37 C.F.R. §1.47(a)" filed on 16 February 2011.

BACKGROUND

In a decision from this Office on 10 January 2010, the initial petition under 37 CFR 1.47(a) was dismissed. The decision stated that item (4) had not been satisfied.

On 16 February 2011, petitioner submitted a "Renewed Petition Under 37 CFR 1.47(a)" requesting reconsideration of the Office's decision of 10 January 2010 with respect to accepting the above application without the signature of the nonsigning inventors. Filed with the renewed petition, *inter alia*, is an executed that identifies the necessary information for co-inventor Tom Smigelski.

DISCUSSION

A petition under 37 CFR 1.47(a) must be accompanied by: (1) the fee under 37 CFR 1.17(g), (2) factual proof that the missing joint inventor refuses to execute the application or cannot be reached after diligent effort, (3) a statement of the last known address of the missing inventor, and (4) an oath or declaration by the 37 CFR 1.47(a) applicant on his or her own behalf and on behalf of the non-signing joint inventor.

The renewed petition of 16 February 2011 has satisfied item (4) under 37 CFR 1.47(a) as the necessary information for co-inventor Tom Smigelski has been identified on the declaration. Thus satisfying all the items under 37 CFR 1.47(a).

Petitioner has now satisfied items (1), (2), (3), and (4) under 37 CFR 1.47(a), thus completing the requirements under 37 CFR 1.47(a).

CONCLUSION

The petition under 37 CFR 1.47(a) is **GRANTED**.

As provided in 37 CFR 1.47(a), a notice of the filing of this application will be forwarded to the non-signing inventor at his last known address of record.

A notice of the filing of the application under 37 CFR 1.47(a) will be published in the Official Gazette.

This application is being returned to the United States Designated/Elected Office (DO/EO/US) for continued processing under 35 U.S.C. 371.

Rafael Bacares
PCT Legal Examiner
PCT Legal Office
Telephone: (571) 272-6312
Facsimile: (571) 273-0459

UNITED STATES PATENT and TRADEMARK OFFICE

COMMISSIONER FOR PATENTS
UNITED STATES PATENT AND TRADEMARK OFFICE
P.O BOX 1450
ALEXANDRIA, VA 22313-1450
www.uspto.gov

Tom Smigelski
238 Waterford Dr.
Lake Zurich, Illinois 60047

MAILED
APR 12 2011
PCT LEGAL ADMINISTRATION

In re Application of
Smigelski et al
Application No.: 12/601,981
PCT No.: PCT/US08/65183
Int. Filing Date: 30 May 2008
Priority Date: 30 May 2007
Attorney's Docket No.: 0006310.0003
For: METHOD and DEVICE...
INTEGRATED CIRCUIT

Dear: Smigelski,

You are named as an inventor in the above identified United States patent application, filed under the provisions of 37 CFR 1.47(a) and 35 U.S.C. 116. Should a patent be granted, you will be designated as an inventor.

As a named inventor, you are entitled to inspect any paper in the file wrapper of the application, order copies of all or any part thereof (at a prepaid cost per 37 CFR 1.19) or to make your position of record in the application. Alternatively, you may arrange to do any of the preceding through a registered patent agent or attorney presenting written authorization from you. If you care to join in the application, counsel of record (see below) would presumably assist you. Joining in the application would entail the filing of an appropriate oath or declaration by you pursuant to 37 CFR 1.63.

R Bacares

Rafael Bacares
PCT Legal Examiner
PCT Legal Office
Telephone: (571) 272-3276
Facsimile: (571) 273-0459

JAMES P. HANRATH
191 NORTH WACKER DRIVE
SUITE 1800
CHICAGO IL 60606

PTO/SB/20PCT-KR (06-10)
Approved for use through 01/31/2012. OMB 0651-0058
U.S. Patent and Trademark Office; U. S. DEPARTMENT OF COMMERCE
Under the Paperwork Reduction Act of 1995, no persons are required to respond to a collection of information unless it displays a valid OMB control number.

REQUEST FOR PARTICIPATION IN THE PATENT COOPERATION TREATY - PATENT PROSECUTION HIGHWAY (PCT-PPH) PILOT PROGRAM BETWEEN THE KOREAN INTELLECTUAL PROPERTY OFFICE (KIPO) AND THE USPTO

Application No:	12/601,981	Filing date:	05/30/2008
First Named Inventor:	Tom Smigelski		
Title of the Invention:	METHOD AND DEVICE FOR PROTECTING INFORMATION...		

THIS REQUEST FOR PARTICIPATION IN THE PCT-PPH PILOT PROGRAM ALONG WITH THE REQUIRED DOCUMENTS MUST BE SUBMITTED VIA EFS-WEB. INFORMATION REGARDING EFS-WEB IS AVAILABLE AT HTTP://WWW.USPTO.GOV/EBC/EFS_HELP.HTML

APPLICANT HEREBY REQUESTS PARTICIPATION IN THE PCT-PPH PROGRAM AND PETITIONS TO MAKE THE ABOVE-IDENTIFIED APPLICATION SPECIAL UNDER THE PCT-PPH PROGRAM.

The above-identified application is (1) a national stage entry of the corresponding PCT application, or (2) a national stage entry of another PCT application which claims priority to the corresponding PCT application, or (3) a national application that claims domestic/ foreign priority to the corresponding PCT application, or (4) a national application which forms the basis for the priority claim in the corresponding PCT application, or (5) a continuing application of a U.S. application that satisfies one of (1) to (4) above, or (6) a U.S. application that claims domestic benefit to a U.S. provisional application which forms the basis for the priority claim in the corresponding PCT application.

The corresponding PCT application number(s) is/are: PCT/US2008/065183

The international filing date of the corresponding PCT application(s) is/are: 05/30/2008

I. List of Required Documents:

a. **A copy of the latest international work product (WO/ISA, WO/IPEA, or IPER) in the above–identified corresponding PCT application(s)**

☑ Is attached.

☐ Is not attached because the document is already in the U.S. application.

b. **A copy of all claims which were indicated as having novelty, inventive step and industrial applicability in the above-identified corresponding PCT application(s).**

☐ Is attached.

☑ Is not attached because the document is already in the U.S. application.

c. **English translations of the documents in a. and b. above are attached (if the documents are not in the English language). A statement that the English translation is accurate is attached for the document in b. above.**

This collection of information is required by 35 U.S.C. 119, 37 CFR 1.55, and 37 CFR 1.102(d). The information is required to obtain or retain a benefit by the public, which is to file (and by the USPTO to process) an application. Confidentiality is governed by 35 U.S.C. 122 and 37 CFR 1.11 and 1.14. This collection is estimated to take 2 hours to complete, including gathering, preparing, and submitting the completed application form to the USPTO. Time will vary depending upon the individual case. Any comments on the amount of time you require to complete this form and/or suggestions for reducing this burden should be sent to the Chief Information Officer, U.S. Patent and Trademark Office, U.S. Department of Commerce, P.O. Box 1450, Alexandria, VA 22313-1450. DO NOT SEND FEES OR COMPLETED FORMS TO THIS ADDRESS.

Approved for use through 01/31/2012. OMB 0651-0058
U.S.Patent and Trademark Office; U.S. DEPARTMENT OF COMMERCE

Under the Paperwork Reduction Act of 1995, no persons are required to respond to a collection of information unless it displays a valid OMB control number.

REQUEST FOR PARTICIPATION IN THE PCT-PPH PILOT PROGRAM BETWEEN THE KIPO AND THE USPTO

(continued)

Application No.:	12/601,981
First Named Inventor:	Tom Smigelski

d. **(1) An information disclosure statement listing the documents cited in the international work products (ISR, WO/ISA, WO/IPEA, IPER) of the corresponding PCT application.**

☐ Is attached

☑ Has already been filed in the above-identified U.S. application on 11/25/2009

(2) Copies of all documents (except) for U.S. patents or U.S. patent application publications)

☐ Are attached.

☑ Have already been filed in the above-identified U.S. application on 11/25/2009

II. Claims Correspondence Table:

Claims in US Application	Patentable Claims in the corresponding PCT Application	Explanation regarding the correspondence
1 to 28	1 to 28	The U.S. claims are identical to the PCT / KIPO claims.

III. All the claims in the US application sufficiently correspond to the patentable claims in the corresponding PCT application.

Signature /james p. hanrath/	Date June 2, 2011
Name (Print/Typed) James P. Hanrath	Registration Number 31965

Privacy Act Statement

The **Privacy Act of 1974 (P.L. 93-579)** requires that you be given certain information in connection with your submission of the attached form related to a patent application or patent. Accordingly, pursuant to the requirements of the Act, please be advised that: (1) the general authority for the collection of this information is 35 U.S.C. 2(b)(2); (2) furnishing of the information solicited is voluntary; and (3) the principal purpose for which the information is used by the U.S. Patent and Trademark Office is to process and/or examine your submission related to a patent application or patent. If you do not furnish the requested information, the U.S. Patent and Trademark Office may not be able to process and/or examine your submission, which may result in termination of proceedings or abandonment of the application or expiration of the patent.

The information provided by you in this form will be subject to the following routine uses:

1. The information on this form will be treated confidentially to the extent allowed under the Freedom of Information Act (5 U.S.C. 552) and the Privacy Act (5 U.S.C 552a). Records from this system of records may be disclosed to the Department of Justice to determine whether disclosure of these records is required by the Freedom of Information Act.
2. A record from this system of records may be disclosed, as a routine use, in the course of presenting evidence to a court, magistrate, or administrative tribunal, including disclosures to opposing counsel in the course of settlement negotiations.
3. A record in this system of records may be disclosed, as a routine use, to a Member of Congress submitting a request involving an individual, to whom the record pertains, when the individual has requested assistance from the Member with respect to the subject matter of the record.
4. A record in this system of records may be disclosed, as a routine use, to a contractor of the Agency having need for the information in order to perform a contract. Recipients of information shall be required to comply with the requirements of the Privacy Act of 1974, as amended, pursuant to 5 U.S.C. 552a(m).
5. A record related to an International Application filed under the Patent Cooperation Treaty in this system of records may be disclosed, as a routine use, to the International Bureau of the World Intellectual Property Organization, pursuant to the Patent Cooperation Treaty.
6. A record in this system of records may be disclosed, as a routine use, to another federal agency for purposes of National Security review (35 U.S.C. 181) and for review pursuant to the Atomic Energy Act (42 U.S.C. 218(c)).
7. A record from this system of records may be disclosed, as a routine use, to the Administrator, General Services, or his/her designee, during an inspection of records conducted by GSA as part of that agency's responsibility to recommend improvements in records management practices and programs, under authority of 44 U.S.C. 2904 and 2906. Such disclosure shall be made in accordance with the GSA regulations governing inspection of records for this purpose, and any other relevant (*i.e.*, GSA or Commerce) directive. Such disclosure shall not be used to make determinations about individuals.
8. A record from this system of records may be disclosed, as a routine use, to the public after either publication of the application pursuant to 35 U.S.C. 122(b) or issuance of a patent pursuant to 35 U.S.C. 151. Further, a record may be disclosed, subject to the limitations of 37 CFR 1.14, as a routine use, to the public if the record was filed in an application which became abandoned or in which the proceedings were terminated and which application is referenced by either a published application, an application open to public inspection or an issued patent.
9. A record from this system of records may be disclosed, as a routine use, to a Federal, State, or local law enforcement agency, if the USPTO becomes aware of a violation or potential violation of law or regulation.

UNITED STATES PATENT AND TRADEMARK OFFICE

UNITED STATES DEPARTMENT OF COMMERCE
United States Patent and Trademark Office
Address: COMMISSIONER FOR PATENTS
P.O. Box 1450
Alexandria, Virginia 22313-1450
www.uspto.gov

APPLICATION NO.	FILING DATE	FIRST NAMED INVENTOR	ATTORNEY DOCKET NO.	CONFIRMATION NO.
12/601,981	02/16/2011	Tom Smigelski	0006310.0003	1504

52390 7590 07/08/2011
JAMES P. HANRATH
191 NORTH WACKER DRIVE
SUITE 1800
CHICAGO, IL 60606

EXAMINER	
ART UNIT	PAPER NUMBER
2189	

MAIL DATE	DELIVERY MODE
07/08/2011	PAPER

Please find below and/or attached an Office communication concerning this application or proceeding.

The time period for reply, if any, is set in the attached communication.

UNITED STATES PATENT AND TRADEMARK OFFICE

Commissioner for Patents
United States Patent and Trademark Office
P.O. Box 1450
Alexandria, VA 22313-1450
www.uspto.gov

JAMES P. HANRATH
191 NORTH WACKER DRIVE
SUITE 1800
CHICAGO IL 60606

In re Application of: SMIGELSKI et al.
Application No. 12/601,981
Atty Docket #: **0006310.0003**
Filed: November 25, 2009
For: **METHOD AND DEVICE FOR PROTECTING INFORMATION CONTAINED IN AN INTEGRATED CIRCUIT**

DECISION ON REQUEST TO PARTICIPATE IN PATENT PROSECUTION HIGHWAY PROGRAM AND PETITION TO MAKE SPECIAL UNDER 37 CFR 1.102(a)

This is a decision on the request to participate in the PCT-Patent Prosecution Highway **(PCT-PPH)** pilot program and the petition under 37 CFR 1.102(a), filed June 2, 2011 to make the above- identified application special.

The petition is **GRANTED.**

A grantable request to participate in the PPH program and petition to make special require:

(1) The U.S. application is
(a) a national stage entry of the corresponding PCT application

Or

(b) a national application which forms the basis for the priority claim in the corresponding PCT application

Or

(c) *a* national stage entry of another PCT application (which can be filed in any competent receiving office) which claims priority to the corresponding PCT application

Or

(d) a national application claiming foreign domestic priority to the corresponding PCT application.
Applications subject to a secrecy order (35U.S.C.181) are excluded and not subject to participation in the PCT-PPH pilot program.

Or

(e) a continuing application (continuation, divisional, or continuation-in-part) of the U.S. application which satisfies one of the above (a) to (d) scenarios.

(2) The latest work product in the international phase of the PCT application corresponding to the U.S. application, namely the WO/ISA, or the WO/IPEA, or the IPER, indicates at least one claim in the PCT application has novelty, inventive step and industrial applicability. In case any observation is described in Box VIII of the WO/ISA, or the WO/IPEA, or the IPER which forms the basis for the PCT-PPH request, applicant must identify and explain why the claim(s) is/are not subject to any observation described in Box VIII irrespective of whether an amendment is submitted to correct the observation described in Box VIII. The U.S. application will not be eligible to participate in the PCT-PPH pilot program if applicant does not identify and explain why the claim(s) is/are not subject to the observation described in Box VIII.

Applicant may not file a request to participate in the PCT-PPH pilot program on the basis of an International Search Report (ISR) only.

(3) Applicant must:

a. Ensure all the claims in the U.S. application sufficiently correspond or be amended to sufficiently correspond to one or more of those claims indicated as having novelty, inventive step and industrial applicability and free of any observation described in Box VIII in the latest work product of the corresponding PCT application and

b. Submit a claims correspondence table in English;

The USPTO will accept claims written in dependent form in the U.S. application which are narrower in scope than the claims indicated as having novelty, inventive step and industrial applicability and free of any observation described in Box VIII in the latest work product of the corresponding PCT application.

(4) Substantive Examination of the U.S. application has not begun;

(5) Applicant must submit a copy of:

a. the latest international work product, WO/ISA, or WO/IPEA or PER, which indicated that the claim(s) has/have novelty, inventive step and industrial applicability along with an English translation thereof if the copy of the latest international work product is not in the English language, unless the U.S. application and the corresponding PCT application satisfy the relationship noted in (l)(a) above.

(6) Applicant must submit a copy of:

a. the claims from the corresponding PCT application which were indicated as having novelty, inventive step and industrial applicability in the latest work product of the PCT application,
b. an English translation of the claims and
c. a statement that the English translation is accurate.

If the claims in the U.S. application are identical to the claims from the corresponding PCT application, and are in the English language, applicant may just indicate such in the PCT-PPH request and it will not be necessary for applicant to submit a copy of the claims from the corresponding PCT application.

(7) Applicant must submit:

a. An IDS listing the documents cited in the work products in the international phase of the PCT application corresponding to the U.S. application, namely the WO/ISA, or the WO/IPEA, or the IPER,(unless already submitted in this application)
b. Copies of the documents except U.S. patents or U.S. patent application publications (unless already submitted in this application);

The request to participate in the PPH pilot program and petition are found to comply with the above requirements. Accordingly, the above-identified application has been accorded "special" status.

Telephone inquiries concerning this decision should be directed to Mano Padmanabhan at 571-272-4210.

All other inquiries concerning the examination or status of the application is accessible in the PAIR system at http://www.uspto.gov/ebc/index.html.

The application is being forwarded to the examiner for action on the merits commensurate with this decision.

/Mano Padmanabhan/

Mano Padmanabhan
Quality Assurance Specialist, Technology Center 2100, Workgroup 2180
571-272-4210

UNITED STATES PATENT AND TRADEMARK OFFICE

Commissioner for Patents
United States Patent and Trademark Office
P.O. Box 1450
Alexandria, VA 22313-1450
www.uspto.gov

00909
PILLSBURY WINTHROP SHAW PITTMAN, LLP
P.O. Box 10500
McLEAN, VA 22102

MAILED

JUN 16 2011

PCT LEGAL ADMINISTRATION

In re Application of
CHENG *et al*
U.S. Application No.: 12/602,005
PCT No.: PCT/CN2008/001074
Int. Filing Date: 02 June 2008
Priority Date: 31 May 2007
Docket No.: 020469-0383827
For: RNA INTERFERENCE TARGET FOR TRWEATING AIDS

DECISION ON PETITION UNDER 37 CFR 1.137(b)

Applicants' petition to revive under 37 CFR 1.137(b) filed on 22 April 2011 is hereby **GRANTED** as follows:

An acceptable CRF sequence listing was provided with the subject petition. The petition fee has been paid. Applicants made the required statement pursuant to 37 CFR 1.137(b)(3). A terminal disclaimer is not required. Accordingly, all requirements under 37 CFR 1.137(b) have been satisfied.

This application is being forwarded to the United States Designated/Elected Office for further processing in accordance with this decision.

James Thomson
Attorney Advisor
Office of PCT Legal Administration

Tel.: (571) 272-3302

3 1 AUG 2010

United States Patent and Trademark Office

Commissioner for Patents
United States Patent and Trademark Office
P.O. Box 1450
Alexandria, VA 22313-1450
www.uspto.gov

CONNOLLY BOVE LODGE & HUTZ LLP
1875 EYE STREET, N.W.
SUITE 1100
WASHINGTON DC 20006

In re Application of	:	
Hagemeyer et al.	:	
Application No.: 12/602,026	:	
PCT No.: PCT/EP2008/004332	:	
Int. Filing Date: 30 May 2008	:	DECISION
Priority Date: 31 May 207	:	
Attorney Docket No.: 30019-00006-US; SUD-117US	:	
For: Method For Producing A Shell Catalyst	:	
And Corresponding Shell Catalyst	:	

This is in response to the "Petition Under 37 CFR 1.182 For Refund Of Fees" filed on 25 June 2010.

BACKGROUND

This international application was filed on 30 May 2008, claimed a earlier priority date of 31 May 2007, and designated the U.S. The International Bureau transmitted a copy of the published international application to the USPTO on 04 December 2008. The 30 month time period for paying the basic national fee in the United States expired at midnight on 30 November 2009. Applicants filed *inter alia* the basic national fee on 25 November 2009..

On 04 April 2010, a Notification of Insufficient Fees (Form PCT/DO/EO/923) was mailed to applicants, requiring $20,800.00 in additional claim fees.

On 22 April 2010, applicants filed a refund request with respect to $13,000.00 in excess claims fees and the $390.00 multiple dependent claim fee.

On 30 April 2010, the USPTO mailed a letter refusing the requested refund because "Amended claims filed 11/25/09 were the claims examined by PAS and 923 mailed 04/05/2010."

DISCUSSION

Applicants request a refund in the amount of $13,390.00 which "was removed from Deposit Account 18-0350 as a result of a clerical error which occurred when an attorney made an error in the preparation of a Preliminary Amendment." Petitioner argues that the "failure to amend claim 67 to remove the multiple dependencies was an error." The petition was accompanied by a "Statement of Glenn Murphy," who indicates that he intended to amend claim 67 to remove multiple dependencies byt, "Due to an inadvertent, unintentional error, I did not amend claim 67." 37 CFR 1.26(a) provides that

> The Director may refund any fee paid by mistake or in excess of that required. A change of purpose after the payment of a fee, such as when a party desires to withdraw a patent filing for which the fee was paid, including an application, an appeal, or a request for an oral hearing, will not entitle a party to a refund of such fee. The Office will not refund amounts of twenty-five dollars or less unless a refund is specifically requested, and will not notify the payor of such amounts. If

> a party paying a fee or requesting a refund does not provide the banking information necessary for making refunds by electronic funds transfer (31 U.S.C. 3332 and 31 CFR part 208), or instruct the Office that refunds are to be credited to a deposit account, the Director may require such information, or use the banking information on the payment instrument to make a refund. Any refund of a fee paid by credit card will be by a credit to the credit card account to which the fee was charged.

Applicants' attention is also drawn to MPEP 506, which explains (in part) that

> If such a preliminary amendment canceling claims is filed, it will diminish the number of claims to be considered for calculation of the filing fee. Any other changes to the application should be the subject of a separate amendment which may be entered after the filing fee has been calculated and the filing date granted. If a preliminary amendment which cancels claims does not accompany the application at the time the application is filed, the notification of insufficient fee will inform the inventor, attorney, or agent of the possibility of correcting the insufficient payment by either (1) paying the additional required fee amount, or (2) filing an amendment which cancels claims so that the remaining claims are covered by the fee submitted upon filing. However, no refund will be made once the fee for claims is properly paid, even though claims are later canceled, unless a petition for express abandonment under 37 CFR 1.138(d) is granted.

And to MPEP 1893.01(c):

> A preliminary amendment accompanying the initial national stage submission under 35 U.S.C. 371 that *>is effective to cancel< claims and/or *>eliminate<multiple dependent claims will be effective to reduce the number of claims to be considered in calculating extra claim fees required under 37 CFR 1.492(d)-(e) and/or eliminate the multiple dependent claim fee required under 37 CFR 1.492(f). A subsequently filed amendment canceling claims and/or eliminating multiple dependent claims will not entitle applicant to a refund of fees previously paid. See MPEP § 607 and § 608.

Petitioner asserts that the fees in question were charged as a result of an error on the part of applicant, and suggests that relief should be available under 37 CFR 1.26(a) because this constitutes a "mistake." Petitioner does not appear to argue that the fee amount was calculated incorrectly, only that an error was made in the preparation of a preliminary amendment. The evidence of record does not adequately establish that the failure to amend the claims was indeed a mistake, nor has petitioner established the specifics of the preliminary amendment which allegedly was intended. Regardless of applicants' intentions, under the policy described at MPEP 506 and 1893.01(c), no refund will be made at this time because the fees were in fact payable at the time they were paid.

DECISION

The petition is **DISMISSED**, without prejudice, as described above.

No response is required. In the event that applicants wish to request reconsideration, such request must be filed within **TWO (2) MONTHS** of the mailing date of this Decision. Extensions of time under 37 CFR 1.136(a) are available.

Any further correspondence with respect to this matter may be filed electronically via EFS-Web selecting the document description "Petition for review and processing by the PCT Legal Office" or by mail addressed to Mail Stop PCT, Commissioner for Patents, Office of PCT Legal Administration, P.O. Box 1450, Alexandria, Virginia 22313-1450, with the contents of the letter marked to the attention of the Office of PCT Legal Administration.

/George Dombroske/
George Dombroske
PCT Legal Examiner
Office of PCT Legal Administration
Tel: (571) 272-3283

UNITED STATES PATENT AND TRADEMARK OFFICE

UNITED STATES DEPARTMENT OF COMMERCE
United States Patent and Trademark Office
Address: COMMISSIONER FOR PATENTS
P.O. Box 1450
Alexandria, Virginia 22313-1450
www.uspto.gov

APPLICATION NO.	FILING DATE	FIRST NAMED INVENTOR	ATTORNEY DOCKET NO.	CONFIRMATION NO.
12/602,026	03/24/2010	Alfred Hagemeyer	30019-00006-US	1749

EXAMINER

7590 12/09/2010
CONNOLLY BOVE LODGE & HUTZ LLP
1875 EYE STREET, N.W.
SUITE 1100
WASHINGTON, DC 20006

ART UNIT	PAPER NUMBER
1732	

MAIL DATE	DELIVERY MODE
12/09/2010	PAPER

DECISION DISMISSING PETITION UNDER 37 CFR 1.138(d)

The declaration of express abandonment will not be recognized

This is in response to the petition under 37 CFR 1.138(d), requesting for a refund of any previously paid search fee and excess claims fee in the above-identified application.

The petition is dismissed.

The express abandonment will **not** be recognized for the reason(s) indicated below:

1. ☐ The petition was not filed in sufficient time to permit the appropriate officials to recognize the abandonment before an examination has been made of the application. See 37 CFR 1.138(d).
2. ☐ The petition was not signed by a party authorized by 37 CFR 1.33(b)(1), (3) or (4).
3. ☑ The application is not an application filed under 35 U.S.C. 111(a) on or after December 8, 2004.
4. ☐ The petition for express abandonment under 1.138(d) is dismissed because the applicant did not pay any search fee and excess claims fees in the above-identified application.

Telephone inquiries should be directed to the Office of Data Management at (571) 272-4200.

Patent Publication Branch
Office of Data Management

FORM PET651D (Rev. 08/07)

United States Patent and Trademark Office

Commissioner for Patents
United States Patent and Trademark Office
P.O. Box 1450
Alexandria, VA 22313-1450
www.uspto.gov

CONNOLLY BOVE LODGE & HUTZ LLP
1875 EYE STREET, N.W.
SUITE 1100
WASHINGTON DC 20006

MAILED

MAY 31 2011

PCT LEGAL ADMINISTRATION

In re Application of Hagemeyer et al. Application No.: 12/602,026 PCT No.: PCT/EP2008/004332 Int. Filing Date: 30 May 2008 Priority Date: 31 May 207 Attorney Docket No.: 30019-00006-US; SUD-117US For: Method For Producing A Shell Catalyst And Corresponding Shell Catalyst	:	DECISION

This is in response to the "Petition Under 37 CFR 1.183 For Suspension Of Rules And Refund Of Fees" filed on 27 September 2010, the "Request For Refund" filed on 06 December 2010, and the "Supplemental Petition Under 37 CFR 1.183" filed on 04 May 2011. The required petition fee has been paid.[1]

BACKGROUND

International application PCT/EP2008/004332 was filed on 30 May 2008, claimed an earlier priority date of 31 May 2007, and designated the U.S. The International Bureau transmitted a copy of the published international application, in German, to the USPTO on 04 December 2008. The 30-month time period for paying the basic national fee in the United States expired at midnight on 30 November 2009.

On 25 November 2009, applicants filed *inter alia* the basic national fee, an English translation of the international application, and a preliminary amendment which removed certain multiple dependencies from the claims. However, the multiple dependency of **claim 67** was not removed.

On 05 April 2010, a Notification of Insufficient Fees (Form PCT/DO/EO/923) was mailed to applicants, requiring $20,800 in additional claim fees (for 706 total claims over 20). Additional claims fees in the amount of $13,000 and a multiple dependent claim fee of $390 were charged to counsel's (RatnerPrestia) Deposit Account no. 18-0350.

On 17 December 2009, a "Request for Withdrawal As Attorney or Agent and Change of Correspondence Address" was filed by the RatnerPrestia firm.

On 24 March 2010, a Power of Attorney appointing attorneys from the Connolly Bove Lodge & Hutz law firm was filed.

On 22 April 2010, a refund request, signed by counsel from the RatnerPrestia firm, was filed requesting a refund of $13,390 in excess claims fees. Counsel argued that the "preliminary amendment that was filed on November 25, 2009 amended the pending claims to remove multiple dependencies. However, due to a clerical error, claim 67 was not amended."

[1] A second petition fee was submitted with the supplemental petition filed 04 May 2011. This fee was unnecessary and will be refunded in due course

On 30 April 2010, the National Stage Processing Branch mailed a letter refusing the requested refund.

On 25 June 2010, a petition under 37 CFR 1.182 signed by counsel from the RatnerPrestia firm was filed seeking refund of the fees in question.

On 31 August 2010, the petition under 37 CFR 1.182 filed on 25 June 2010 was dismissed, without prejudice.

On 27 September 2010, a petition under 37 CFR 1.183, signed by counsel from the RatnerPrestia firm, was filed.

On 06 December 2010, applicants, through appointed counsel from the Connolly Bove firm, filed "Petition For Express Abandonment To Obtain A Refund" under 37 CFR 1.138(d) and refund request. The Patent Publication Branch mailed a "Decision Dismissing Petition Under 37 CFR 1.138(d)," on 09 December 2010, dismissing the petition under 37 CFR 1.138(d) on the basis that "the application is not an application under 35 U.S.C. 111(a) on or after December 8, 2004."

On 04 May 2011, applicants, through appointed counsel, filed a supplemental petition under 37 CFR 1.183 requesting that the restrictions of 37 CFR 1.138(d) be waived and the provisions of 37 CFR 1.138(d) be applied in this case.

DISCUSSION

Applicants request a refund in the amount of $13,390.00 (or, alternatively, $ 16,562), arguing that "justice requires the refund" because "The removal of $13,390 is a tremendous financial burden on Mr. Ashery for an obvious error. The attorney that made the clerical error clearly did not intend to file claims necessitating a $20,000 plus filing fee and it is extremely unfair for the undersigned to be penalized for that attorney's error. It is respectfully submitted that the Office's refusal to refund the $13,390 is unreasonable and exceptionally harsh due to a clerical error."

Applicants further argue that, according to MPEP 509.01, Mr. Ashery's deposit account should have been suspended as overdrawn and not charged for the $13,000 partial payment of excess claims fees.

Applicants also argue that the preliminary amendment in question was accompanied by a fee calculation sheet which "includes a numerical number which corresponds to the removal of all multiple dependent claims. Thus, the evidence of the fee calculation confirms that no multiple dependent claims were intended to be in the application and that the failure to remove multiple dependent claims from one of the pending claims was indeed an error."

Applicants additionally argue that applicants "did not affirmatively 'pay' for any of the claims triggered by the erroneous inclusion of a multiple dependent claim."

Applicants' arguments have been considered. To the extent that applicants argue that the USPTO erred in charging counsel's deposit account a portion of the excess claims fees due, such argument is unpersuasive. Applicants' initial submission under 35 U.S.C. 371 included a general deposit account authorization to charge "any additional fees." See, e.g., page 17 of the "Preliminary Amendment." The Consolidated Appropriations Act provides that the excess claims fees specified in 35 U.S.C. 41(a)(2) shall apply "on filing or on presentation at any other time, $50 for each claim (whether dependent or independent) in excess of 20". Thus, payment for each claim in excess of 20 was due when such claim was presented. See also MPEP § 607. That

applicants did not "affirmatively pay for any claims triggered by the erroneous inclusion of a multiple dependent claim" is irrelevant in light of the inclusion of a general authorization to charge counsel's deposit account for any additional fees. Nor was the charging of a portion of the excess claims fees to counsel's deposit account inconsistent with MPEP 509.01 as alleged, as the charge did not result in an overdrawn account. An excess claim fee is required by statute for each claim in excess of 20 presented. Cumulative excess claims fees are not indivisible. Thus, the fact that cumulative excess claims fees due exceeded the funds available in counsel's deposit account did not render improper the charge for those excess claims for which funds were available.

Applicants also argue that justice requires relief in the present case and request that "the restrictions of 37 CFR 1.138(d) be waived and that the provisions of 37 CFR 1.138(d) be applied in the present case."

37 CFR 1.138(d) provides that

> An applicant seeking to abandon an application filed under 35 U.S.C. 111(a) and § 1.53(b) on or after December 8, 2004, to obtain a refund of the search fee and excess claims fee paid in the application, must submit a declaration of express abandonment by way of a petition under this paragraph before an examination has been made of the application. The date indicated on any certificate of mailing or transmission under § 1.8 will not be taken into account in determining whether a petition under § 1.138(d) was filed before an examination has been made of the application. If a request for refund of the search fee and excess claims fee paid in the application is not filed with the declaration of express abandonment under this paragraph or within two months from the date on which the declaration of express abandonment under this paragraph was filed, the Office may retain the entire search fee and excess claims fee paid in the application. This two-month period is not extendable. If a petition and declaration of express abandonment under this paragraph are not filed before an examination has been made of the application, the Office will not refund any part of the search fee and excess claims fee paid in the application except as provided in § 1.26.

while 37 CFR 1.183 provides that

> In an extraordinary situation, when justice requires, any requirement of the regulations in this part which is not a requirement of the statutes may be suspended or waived by the Director or the Director's designee, sua sponte, or on petition of the interested party, subject to such other requirements as may be imposed. Any petition under this section must be accompanied by the petition fee set forth in § 1.17(f).

Relief under 37 CFR 1.138(d) is limited to applications filed under 35 U.S.C. 111(a) and 37 CFR 1.53(b), and therefore is not available in the case of a national stage application under 35 U.S.C. 371. The situation presented by this application is regarded as an extraordinary situation, where justice requires waiver, because: 1) applicants' characterization of the error in the failure to amend claim 67 as unintentional is persuasive, 2) the record evidences an intent to remove all multiple dependencies upon initial filing; 3) dependent claim 67 did not refer to the claims from which it depends specifically by claim numbers and consequently was subject to being easily overlooked, particularly in view of the large number of claims intended to be present (76 claims); and 4) very substantial excess claims fees have been incurred as a result of the error. Therefore, the petitions under 37 CFR 1.183 and 37 CFR 1.138(d) are granted.

DECISION

The petitions under 37 CFR 1.183 and 1.138(d) are **GRANTED**.

The application stands **ABANDONED** with respect to the national stage in the United States.

Any inquiries concerning this decision may be directed to PCT Legal Examiner George Dombroske at (571) 272-3283.

In accordance with 37 CFR 1.138(d), the search fee and excess claim fees will be refunded to Deposit Account no. 18-0350 in due course.

Charles Pearson
Director
Office of PCT Legal Administration

cc: Lawrence Ashery
RATNERPRESTIA
ONE WESTLAKES STE 312
VALLEY FORGE, PA 19482

UNITED STATES PATENT AND TRADEMARK OFFICE

Commissioner for Patents
United States Patent and Trademark Office
P.O. Box 1450
Alexandria, VA 22313-1450
www.uspto.gov

MAILED

DEC 06 2010

PCT LEGAL ADMINISTRATION

BOYLE FREDRICKSON S.C.
840 North Plankinton Avenue
MILWAUKEE WI 53203

In re Application of BELOHAV et al.
Application No.: 12/602,053
PCT Appl No.: PCT/US08/064871
Int'l Filing Date: 27 May 2008
Priority Date: 25 May 2007
Attorney Docket No.: 1618.044
For: BRAZING MATERIAL

: DECISION ON PETITION
: UNDER 37 CFR 1.47(a)

This is a decision on applicant's renewed petition under 37 CFR 1.47(b), treated as a petition under 37 CFR 1.47(a)[1], and filed in the United States Patent and Trademark Office (USPTO) on 29 September 2010, to accept the application without the signature of joint inventor FELIPE CARDONA.

BACKGROUND

On 25 November 2009, applicant filed a transmittal letter requesting U.S. national stage entry of international application PCT/US08/64871.

On 05 April 2010, a Notification to Missing Requirements was mailed to applicant indicating *inter alia*, that an oath or declaration, in accordance with 37 CFR 1.497(a) and (b) was required.

On 15 June 2010, applicant filed the instant petition along with a declaration, executed by the joint inventors on behalf of the nonsigning inventor. The petition under 37 CFR 1.47(a), in an attempt to satisfy the requirements of 35 U.S.C. 371(c)(4), requested the acceptance of the application without the signature of inventor FELIPE CARDONA alleging that the inventor is unavailable. On 29 July 2010, a decision dismissing the petition was mailed to applicant.

DISCUSSION

A petition under 37 CFR §1.47(a) must be accompanied by (1) the fee under 37 CFR §1.17(g), (2) factual proof that the non-signing joint inventor(s) refuses to execute the application or cannot be reached after diligent effort, (3) a statement of the last known address of the non-signing inventor(s), and (4) an oath or declaration by each available joint inventor on his or her own behalf and on behalf of the non-signing joint inventor(s).

Petitioner previously satisfied Items (1) and (4).

With respect to Item (2) above, as indicated in the MPEP Section 409.03(d), where inability to find or reach a nonsigning inventor "after diligent effort" is the reason for filing

[1] 37 CFR 1.47(b) applies whenever *all of the inventors* refuse to execute the application or cannot be found or reached after diligent effort. Here, where only one of the joint inventors refuses to sign or is unavailable to sign the application, a petition under 37 CFR 1.47(a) is required.

under 37 CFR 1.47, a statement of facts should be submitted that fully describes the exact facts which are relied on to establish that a diligent effort was made. The statement of facts must be signed, where at all possible, by a person having first-hand knowledge of the facts recited therein. Statements based on hearsay will not normally be accepted. Copies of documentary evidence such as internet searches, certified mail return receipts, cover letters of instructions, telegrams, that support a finding that the nonsigning inventor could not be found or reached should be made part of the statement. The steps taken to locate the whereabouts of the nonsigning inventor should be included in the statement of facts. It is important that the statement contain facts as opposed to conclusions.

Petitioner indicates that correspondence was mailed via certified mail to the nonsigning inventor at his last known address in Wisconsin, which was returned as undeliverable by the U. S. Postal Service (USPS). USPS indicated on the returned envelope: "FORWARD TIME EXP RETURN TO SENDER" and provided a forwarding address in Texas. An attempt to deliver the correspondence to the non-signing inventor at the address in Texas via USPS certified mail and Federal Express was also returned to Petitioner as undeliverable.

It does not appear that any effort was made to locate the nonsigning inventor, using Internet searches or contact with all joint inventors to obtain the nonsigning inventor's current address. Although Petitioner states that the nonsigning inventor may have moved out of the country, some further effort to locate the nonsigning inventor should be undertaken before it can be concluded that Petitioner is unable to find or reach a nonsigning inventor "after diligent effort". Petitioner's statement of facts under 37 CFR 1.47(a) should describe these efforts to locate the nonsigning inventor. Therefore, it cannot be concluded that the nonsigning inventor is unavailable to sign the application. Petitioner has not satisfied Item (2). *See* MPEP Section 409.03(d) Proof of Unavailability or Refusal I. Inventor Cannot Be Reached.

Item (3) is satisfied because the last known address for the non-signing inventor was provided.

In sum, Petitioner has satisfied Item (1), (3) and (4). Item (2) is not yet satisfied. Accordingly, it is inappropriate to accord the national stage application status under 37 CFR §1.47(a) at this time.

CONCLUSION

The petition under 37 CFR §1.47(a) is **DISMISSED WITHOUT PREJUDICE**.

Any reconsideration on the merits of the petition under 37 CFR §1.47(a) must be filed within TWO (2) MONTHS from the mail date of this decision. Any reconsideration request should include a cover letter entitled "Renewed Petition Under 37 CFR §1.47(a)." No petition fee is required. Any further extensions of time available may be obtained under 37 CFR 1.136(a).

Any further correspondence with respect to this matter may be filed electronically via EFS-Web selecting the document description "Petition for review and processing by the PCT Legal Office" or by mail addressed to Mail Stop PCT, Commissioner for Patents, Office of PCT Legal Administration, P.O. Box 1450, Alexandria, Virginia 22313-1450, with the contents of the letter marked to the attention of the Office of PCT Legal Administration.

/Cynthia M .Kratz/
Cynthia M. Kratz
Attorney Advisor
PCT Legal Office
Office of PCT Legal Administration
Telephone: (571) 272-3286
Facsimile (571) 272-0459

UNITED STATES PATENT AND TRADEMARK OFFICE

Commissioner for Patents
United States Patent and Trademark Office
P.O. Box 1450
Alexandria, VA 22313-1450
www.uspto.gov

MAILED

FEB 10 2011

PCT LEGAL ADMINISTRATION

BOYLE FREDRICKSON S.C.
840 North Plankinton Avenue
MILWAUKEE WI 53203

In re Application of BELOHAV et al.
Application No.: 12/602,053
PCT Appl No.: PCT/US08/64871
Int'l Filing Date: 27 May 2008
Priority Date: 25 May 2007
Attorney Docket No.: 1618.044
For: BRAZING MATERIAL

DECISION ON PETITION

UNDER 37 CFR 1.47(a)

This is a decision on applicant's renewed petition under 37 CFR 1.47(b), treated as a petition under 37 CFR 1.47(a), and filed in the United States Patent and Trademark Office (USPTO) on 27 December 2010. This is also responsive to applicant's submission of an executed declaration on 05 January 2011.

BACKGROUND

On 25 November 2009, applicant filed a transmittal letter requesting U.S. national stage entry of international application PCT/US08/64871.

On 05 April 2010, a Notification to Missing Requirements was mailed to applicant indicating, *inter alia*, that an oath or declaration, in accordance with 37 CFR 1.497(a) and (b), was required.

On 15 June 2010, applicant filed a petition along with a declaration, executed by the joint inventors on behalf of the nonsigning inventor. The petition under 37 CFR 1.47(a), in an attempt to satisfy the requirements of 35 U.S.C. 371(c)(4), requested the acceptance of the application without the signature of inventor FELIPE CARDONA alleging that the inventor is unavailable. On 29 July 2010, a decision dismissing the petition was mailed to applicant.

On 29 September 2010, applicant filed a renewed petition under 37 CFR 1.47(a). On 06 December 2010, a decision was mailed dismissing the petition.

DISCUSSION

Petitioner has now presented the declaration signed by inventor FELIPE CARDONA. A review of the declaration reveals that the declaration identifies all the inventors named in the international application and is executed by the previously non-signing inventor. The declaration also states the residency, citizenship and mailing address of each inventor. The declaration executed by inventor FELIPE CARDONA is acceptable under 37 CFR 1.497(a) and (b).

The petition under 37 CFR 1.47(a) is considered moot as a declaration executed by the previously unavailable inventor has now been submitted.

CONCLUSION

For the above reasons, the petition under 37 CFR 1.47(a) is **DISMISSED AS MOOT**.

The declaration, executed by the previously non-signing inventor, submitted 05 January 2011, is in compliance with 37 CFR 1.497(a) and (b) and is acceptable.

The application will be forwarded to the United States Designated/Elected Office for further processing in accord with this decision. The 35 U.S.C. 371(c)(1), (c)(2) and (c)(4) date is 05 January 2011.

/Cynthia M .Kratz/
Cynthia M. Kratz
Attorney Advisor
PCT Legal Office
Office of PCT Legal Administration
Telephone: (571) 272-3286
Facsimile (571) 272-0459

United States Patent and Trademark Office

Commissioner for Patents
United States Patent and Trademark Office
P.O. Box 1450
Alexandria, VA 22313-1450
www.uspto.gov

MAILED

NOV 22 2010

PCT LEGAL ADMINISTRATION

HARNESS, DICKEY & PIERCE, P.L.C.
P.O. BOX 828
BLOOMFIELD HILLS MI 48303

In re Application of	:	
Yin et al.	:	
Application No.: 12/602,066	:	
PCT No.: PCT/CN2008/071116	:	
Int. Filing Date: 28 May 2008	:	DECISION
Priority Date: 28 May 2007	:	
Attorney Docket No.: 15157-000014/US/NP	:	
For: Agrochemical Composition And Method For	:	
For Preparing And Using The Same	:	

This is in response to the renewed submission under 37 CFR 1.497(d) filed on 14 September 2010 and the petition under 37 CFR 1.182 filed on 22 September 2010.

DISCUSSION

Status Under 37 CFR 1.497(d)

In a Decision mailed on 14 July 2010, the declaration was not accepted under 37 CFR 1.497(d), without prejudice, because

> Regarding requirement (3), inspection of the published international application suggests that Jiangsu Rotam Chemistry Co., Ltd. may enjoy an assignment interest in this application, but applicants have not provided the written consent of any assignee. Clarification is required.

In response, counsel has provided written consent documents related to two assignees, Jiangsu Rotam Chemistry Co., Ltd. and Rotam Agrochem International Co., Ltd. Each of these documents purports to consent to the addition of Moorthy and Lo as inventors. However, neither assignee asserts the extent of its ownership as required by 37 CFR 3.73(c)(2). Therefore, requirement (3) has not been satisfied at this time.

Petition Under 37 CFR 1.182

Petitioner seeks correction of inventor Moorthy/Narayanamoorthy's name. The inventor asserts that the two versions of the name refer to the same person, and that no deceptive intent was involved in signing the declaration as "P. Moorthy." Based on the totality of the evidence of record, it would be appropriate to accept the statement that the two versions of the name refer to the same inventor, and to accept the name as it appears on the declarations of record.

DECISION

The declaration is **NOT ACCEPTED** under 37 CFR 1.497(d), without prejudice.

The petition under 37 CFR 1.182 is **GRANTED** to the extent noted above.

If reconsideration on the merits of this matter is desired, a proper response must be filed within **TWO (2) MONTHS** from the mail date of this decision. Extensions of time are available under 37 CFR 1.136(a). Failure to timely reply will result in **ABANDONMENT** of this application.

Any further correspondence with respect to this matter may be filed electronically via EFS-Web selecting the document description "Petition for review and processing by the PCT Legal Office" or by mail addressed to Mail Stop PCT, Commissioner for Patents, Office of PCT Legal Administration, P.O. Box 1450, Alexandria, Virginia 22313-1450, with the contents of the letter marked to the attention of the Office of PCT Legal Administration.

/George Dombroske/
George Dombroske
PCT Legal Examiner
Office of PCT Legal Administration
Tel: (571) 272-3283

United States Patent and Trademark Office

Commissioner for Patents
United States Patent and Trademark Office
P.O. Box 1450
Alexandria, VA 22313-1450
www.uspto.gov

MAILED

MAR 25 2011

PCT LEGAL ADMINISTRATION

HARNESS, DICKEY & PIERCE, P.L.C.
P.O. BOX 828
BLOOMFIELD HILLS MI 48303

In re Application of
Yin et al.
Application No.: 12/602,066
PCT No.: PCT/CN2008/071116
Int. Filing Date: 28 May 2008
Priority Date: 28 May 2007
Attorney Docket No.: 15157-000014/US/NP
For: Agrochemical Composition And Method For For Preparing And Using The Same

DECISION

This is in response to the renewed submission under 37 CFR 1.497(d) filed on18 January 2011.

DISCUSSION

In a Decision mailed on 22 November 2010, the declaration was not accepted under 37 CFR 1.497(d), without prejudice, because

> counsel has provided written consent documents related to two assignees, Jiangsu Rotam Chemistry Co., Ltd. and Rotam Agrochem International Co., Ltd. Each of these documents purports to consent to the addition of Moorthy and Lo as inventors. However, neither assignee asserts the extent of its ownership as required by 37 CFR 3.73(c)(2). Therefore, requirement (3) has not been satisfied at this time.

In response, counsel now asserts that "ROTAM AGROCHEM INTERNATIONAL CO., LTD. owns the entire right, title and interest in the invention of Application No. 12/602,066." The attached statement under 37 CFR 3.73(b) identifies ROTAM as the assignee of the entire right, title and interest in the application, indicates that documentary evidence of the chain of title was submitted for recordation, and is signed on behalf of the assignee by Chick Yuk Ching, who is asserted to be "authorized to act on behalf of the assignee." However, the37 CFR 3.73(b) statement does not itself indicate the reel and frame numbers where documentary evidence of the chain of title has been recorded in the USPTO. Though counsel states reel and frame numbers where two assignments have been recorded, he neither asserts authority nor enjoys apparent authority to make a statement under 37 CFR 3.73(b) on behalf of the assignee. *See* MPEP 324. Applicants should provide a new statement under 37 CFR 3.73(b) which indicates where the relevant assignments have been recorded in the USPTO.

DECISION

The declaration filed on 14 September 2010 is **NOT ACCEPTED** under 37 CFR 1.497(d), without prejudice.

If reconsideration on the merits of this matter is desired, a proper response must be filed within **TWO (2) MONTHS** from the mail date of this decision. Extensions of time are available under 37 CFR 1.136(a). Failure to timely reply will result in **ABANDONMENT** of this application.

Any further correspondence with respect to this matter may be filed electronically via EFS-Web selecting the document description "Petition for review and processing by the PCT Legal Office" or by mail addressed to Mail Stop PCT, Commissioner for Patents, Office of PCT Legal Administration, P.O. Box 1450, Alexandria, Virginia 22313-1450, with the contents of the letter marked to the attention of the Office of PCT Legal Administration.

/George Dombroske/
George Dombroske
PCT Legal Examiner
Office of PCT Legal Administration
Tel: (571) 272-3283

UNITED STATES PATENT AND TRADEMARK OFFICE

Commissioner for Patents
United States Patent and Trademark Office
P.O. Box 1450
Alexandria, VA 22313-1450
www.uspto.gov

MAILED
DEC 05 2011
PCT LEGAL ADMINISTRATION

HARNESS, DICKEY & PIERCE, P.L.C.
P.O. BOX 828
BLOOMFIELD HILLS MI 48303

In re Application of
Yin et al.
Application No.: 12/602,066
PCT No.: PCT/CN2008/071116
Int. Filing Date: 28 May 2008
Priority Date: 28 May 2007
Attorney Docket No.: 15157-000014/US/NP
For: Agrochemical Composition And Method For For Preparing And Using The Same

DECISION

This is in response to the renewed submission under 37 CFR 1.497(d) filed on 24 May 2011.

DISCUSSION

In a Decision mailed on 25 March 2011, and in response to the renewed submission under 37 CFR 1.497(d) filed on 18 January 2011, the declaration was not accepted, without prejudice, because

> the 37 CFR 3.73(b) statement does not itself indicate the reel and frame numbers where documentary evidence of the chain of title has been recorded in the USPTO. Though counsel states reel and frame numbers where two assignments have been recorded, he neither asserts authority nor enjoys apparent authority to make a statement under 37 CFR 3.73(b) on behalf of the assignee. *See* MPEP 324. Applicants should provide a new statement under 37 CFR 3.73(b) which indicates where the relevant assignments have been recorded in the USPTO.

In response, applicants have provided an acceptable statement under 37 CFR 3.73(b). As such, it now would be appropriate to grant the requested relief under 37 CFR 1.497(d).

The $65.00 surcharge under 37 CFR 1.492(h) is being charged to counsel's Deposit Account, as authorized in the Transmittal Letter filed on 25 November 2009.

DECISION

The declaration filed on 14 September 2010 is **ACCEPTED** under 37 CFR 1.497(d). The declaration is accepted for purposes of compliance with 37 CFR 1.497(a) and (b).

This application is being returned to the Office of Patent Application Processing. Its date under 35 U.S.C. 371(c)(1), (2) and (4) is **14 September 2010**.

/George Dombroske/
George Dombroske
PCT Legal Examiner
Office of PCT Legal Administration
Tel: (571) 272-3283

UNITED STATES PATENT AND TRADEMARK OFFICE

Commissioner for Patents
United States Patent and Trademark Office
Washington, D.C. 20231
www.uspto.gov

THE ECLIPSE GROUP LLP
6345 Balboa Blvd., Suite 325
Encino, CA 91316

MAILED

OCT 20 2010

PCT LEGAL ADMINISTRATION

In re Application of	:	
SAIGH, et al.	:	
U.S. Application No.: 12/602,147	:	DECISION
PCT No.: PCT/CA2008/001009	:	
International Filing Date: 28 May 2008	:	
Priority Date: 28 May 2007	:	
Attorney's Docket No.: LOA09001USU	:	
For: PORTABLE MODULAR SCALE SYSTEM	:	

This decision is issued in response applicant's request for refund filed 19 July 2010 in the United States Patent and Trademark Office (USPTO). No petition fee is required.

On 27 November 2009, applicant initiated the present national stage application. Among the materials submitted by applicants was the authorization to charge Deposit Account No. 50-2542 all necessary fees. Applicant did not claim small entity status upon filing.

On 19 July 2010, applicant filed the refund request considered herein. This submission includes a copy of a verified statement claiming small entity status.

37 CFR 1.26 permits an applicant who has mistakenly paid an excess fee to seek a refund for such payment. Where an applicant has paid a full fee and subsequently seeks a refund based on small entity status, 37 CFR 1.28(a) states that the refund request and the assertion of small entity status must be must be made within **three months** of the payment of the full fee.

In the present case, applicant has not made the refund request and assertion of small entity status within the required three month time period. As such, it is not possible to grant applicant's request for refund and the request is **DISMISSED**.

Any further correspondence with respect to this matter should be directed to Mail Stop PCT, Commissioner for Patents, Office of PCT Legal Administration, P.O. Box 1450, Alexandria, Virginia 22313-1450, with the contents of the letter marked to the attention of the Office of PCT Legal Administration or electronically filed utilizing the USPTO's EFS-Web electronic filing system.

Derek A. Putonen
Attorney Advisor
Office of PCT Legal Administration
Tel: 571-272-3294

24 AUG 2010

UNITED STATES PATENT AND TRADEMARK OFFICE

Commissioner for Patents
United States Patent and Trademark Office
Washington, D.C. 20231
www.uspto.gov

KILYK & BOWERSOX, P.L.L.C.
400 HOLIDAY COURT
SUITE 102
WARRENTON VA 20186

In re Application of	:	
KHEMANI, et al.	:	DECISION ON PETITION
Serial No.: 12/602,257	:	
PCT No.: PCT/AU2008/000787	:	UNDER 37 CFR 1.47(a)
Int. Filing Date: 02 June 2008	:	
Priority Date: 01 June 2007	:	
Atty Docket No.: 3231-006	:	
For: STARCH NANOCOMPOSITE MATERIALS	:	

This decision is issued in response to applicants' "Renewed Petition Under 37 C.F.R. § 1.47(a)" filed 05 August 2010. In a decision dated 15 June 2010, applicants' petition under 37 CFR 1.47(a) to accept the application without the signature of joint inventor, Kishan Khemani, was dismissed without prejudice.

The renewed petition under 37 CFR 1.47(a) is moot since the declaration which accompanies the petition has been executed by the previous non-signing inventor. The declaration filed 05 August 2010 is acceptable under 37 CFR 1.497.

For the reasons above, the renewed petition under 37 CFR 1.47(a) is **DISMISSED** as MOOT.

The application has an international filing date of 02 June 2008 under 35 U.S.C. 363 and a date of **05 August 2010** under 35 U.S.C. 371(c)(1),(c)(2) and (c)(4).

The application is being returned to the International Division for processing as the U.S. National Stage of the above-identified international application.

Derek A. Putonen
Attorney-Advisor
Office of PCT Legal Administration
Tel.: 571-272-3294

UNITED STATES PATENT AND TRADEMARK OFFICE

Commissioner for Patents
United States Patent and Trademark Office
P.O. Box 1450
Alexandria, VA 22313-1450
www.uspto.gov

DILWORTH & BARRESE, LLP
1000 WOODBURY ROAD
SUITE 405
WOODBURY NY 11797

MAILED
15 DEC 2010
PCT LEGAL ADMINISTRATION

In re Application of: NILSSON, Goran
U.S. Application No.: 12/602,294
PCT No.: PCT/SE2008/050635
International Filing Date: 30 May 2008
Priority Date: 31 May 2007
Attorney Docket No.: 821-147
For: A PROPELLER FOR A WIND MOTOR

DECISION REGARDING SUBMISSION UNDER 37 CFR 1.42

This decision is issued in response to applicants' submission on 07 April 2010 of a declaration executed on behalf of deceased sole inventor Goran NILSSON by his legal representatives, considered herein as a submission under 37 CFR 1.42.

BACKGROUND

On 30 May 2008, applicant filed international application PCT/SE2008/050635. The international application claimed a priority date of 31 May 2007, and it designated the United States. On 04 December 2008, the International Bureau (IB) communicated a copy of the international application to the United States Patent and Trademark Office (USPTO). The deadline for submission of the basic national fee was thirty months from the priority date, i.e., 30 November 2009.

On 30 November 2009, applicant filed a Transmittal Letter for entry into the national stage in the United States accompanied by, among other materials, payment of the basic national fee.

On 25 March 2010, the United States Designated/Elected Office (DO/EO/US) issued a "Notification Of Missing Requirements" (Form PCT/DO/EO/905) requiring submission of an oath or declaration in compliance with 37 CFR 1.497 and the surcharge for filing the oath or declaration later than thirty months after the priority date.

On 07 April 2010, applicants filed a response to the Notification Of Missing Requirements that included payment of the required surcharge and a declaration that indicated that the sole inventor was deceased. The declaration was executed on behalf of the deceased inventor by three persons identified as legal representatives of the deceased inventor's estate: Gun Persson, Eva Zamel, and Rolf Nilsson. The declaration is considered herein under 37 CFR 1.42 and 1.497.

DISCUSSION

37 CFR 1.42 states in part:

> In case of the death of the inventor, the legal representative (executor, administrator, etc.) of the deceased inventor may make the necessary oath or declaration, and apply for and obtain the patent.

Section 409.01(a) of the MPEP states that the application can also be executed by all of the heirs of the deceased inventor, where no legal representative has been appointed or is required to be appointed by law.

37 CFR 1.497(b)(2) states the following:

> If the person making the oath or declaration or any supplemental oath or declaration is not the inventor (§§ 1.42, 1.43, or 1.47) the oath or declaration shall state the relationship of the person to the inventor, and, upon information and belief, the facts which the inventor would have been required to state. If the person is the legal representative of a deceased inventor, the oath or declaration shall also state that the person is a legal representative and the citizenship, residence, and mailing address of the legal representative.

Pursuant to 37 CFR 1.497(b)(2), the citizenship for both the deceased inventor and the legal representative must be identified on the declaration, as well as the mailing address and residence information of the legal representative and all other information required under 37 CFR 1.497. Here, the declaration filed 07 April 2010 includes the required citizenship, residence, and mailing address information for the three persons signing the declaration on behalf of the deceased inventor, as well as the required citizenship of the deceased inventor. The declaration also states the relationship of the persons signing to the deceased inventor (i.e., "Legal Representative of the Estate of Goran Nilsson"). The declaration therefore includes all information required under 37 CFR 1.497(b)(2).

CONCLUSION

Applicants' request for status under 37 CFR 1.42 with respect to deceased inventor Goran NILSSON is **GRANTED**.

The application is being referred to the National Stage Processing Branch of the Office of PCT Operations for further processing in accordance with this decision. The date under 35 U.S.C. 371(c)(1), (c)(2), and (c)(4) is 07 April 2010.

/RichardMRoss/

Richard M. Ross
Attorney Advisor
Office of PCT Legal Administration
Telephone: (571) 272-3296

United States Patent and Trademark Office

Commissioner for Patents
United States Patent and Trademark Office
P.O. Box 1450
Alexandria, VA 22313-1450
www.uspto.gov

MAILED

DEC 02 2010

PCT LEGAL ADMINISTRATION

SIEMENS CORPORATION
INTELLECTUAL PROPERTY DEPARTMENT
170 WOOD AVENUE SOUTH
ISELIN NJ 08830

In re Application of
Zha et al.
Application No.: 12/602,316
PCT No.: PCT/US2008/006799
Int. Filing Date: 29 May 2008
Priority Date: 29 May 2007
Attorney Docket No.: 2007P11068WOUS
For: Membrane Cleaning With Pulsed Airlift Pump

DECISION ON PETITION

This is in response to the petition under 37 CFR 1.47(a) filed on 29 September 2010.

BACKGROUND

This international application was filed on 29 May 2008, claimed an earlier priority date of 29 May 2007, and designated the U.S. The 30 month time period for paying the basic national fee in the United States expired at midnight on 30 November 2009 (since 29 November 2009 was a Sunday). Applicants filed *inter alia* the basic national fee on 30 November 2009.

On 30 March 2010, a Notification of Missing Requirements (Form PCT/DO/EO/905) was mailed to applicants, requiring the submission of an oath or declaration compliant with 37 CFR 1.497(a) and (b).

DISCUSSION

A petition under 37 CFR 1.47(a) must be accompanied by (1) the fee under 37 CFR 1.17(h), (2) factual proof that the missing joint inventor refuses to execute the application or cannot be reached after diligent effort, (3) a statement of the last known address of the missing inventor, and (4) an oath or declaration by each 37 CFR 1.47(a) applicant on his or her own behalf and on behalf of the non-signing joint inventor.

Regarding **requirement (1)**, the $200.00 petition fee has been paid.

Regarding **requirement (2)**, petitioner indicates, on the basis of information and belief, that a copy of the declaration was mailed to Mr. Zha by Robyn Phillips, but does not indicate whether said declaration was accompanied by a complete copy of the application papers. In addition, no first-hand statement by Robin Phillips has been provided, nor has petitioner submitted a copy of any of the mailed correspondence. *See* MPEP 409.03(d). Therefore, it would not be appropriate to conclude that requirement (2) has been satisfied at this time.

Regarding **requirement (3)**, the petition indicates the last known address of the non-signing joint inventor.

Regarding **requirement (4)**, the declaration filed on 29 September 2010 appears to have been assembled by combining separately signed sheets into a single document. This is not permitted. *See* MPEP 605.04(a)("Where individual declarations are executed, they must be submitted as individual declarations rather than combined into one declaration (by combining the signature pages)").

DECISION

The petition under 37 CFR 1.47(a) is **DISMISSED**, without prejudice.

If reconsideration on the merits of this petition is desired, a proper response must be filed within **TWO (2) MONTHS** from the mail date of this decision. Any reconsideration request should include a cover letter entitled "Renewed Petition Under 37 CFR 1.47(a)." No additional petition fee is required. Extensions of time may be obtained under 37 CFR 1.136(a). Failure to timely file a proper response will result in **ABANDONMENT**.

Any further correspondence with respect to this matter may be filed electronically via EFS-Web selecting the document description "Petition for review and processing by the PCT Legal Office" or by mail addressed to Mail Stop PCT, Commissioner for Patents, Office of PCT Legal Administration, P.O. Box 1450, Alexandria, Virginia 22313-1450, with the contents of the letter marked to the attention of the Office of PCT Legal Administration.

/George Dombroske/
George Dombroske
PCT Legal Examiner
Office of PCT Legal Administration
Tel: (571) 272-3283

United States Patent and Trademark Office

Commissioner for Patents
United States Patent and Trademark Office
P.O. Box 1450
Alexandria, VA 22313-1450
www.uspto.gov

MAILED

AUG 15 2011

PCT LEGAL ADMINISTRATION

SIEMENS CORPORATION
INTELLECTUAL PROPERTY DEPARTMENT
170 WOOD AVENUE SOUTH
ISELIN NJ 08830

In re Application of
Zha et al.
Application No.: 12/602,316
PCT No.: PCT/US2008/006799
Int. Filing Date: 29 May 2008
Priority Date: 29 May 2007
Attorney Docket No.: 2007P11068WOUS
For: Membrane Cleaning With Pulsed Airlift Pump

DECISION ON PETITION

This is in response to the renewed petition under 37 CFR 1.47(a) filed on 06 January 2011.

DISCUSSION

In a Decision mailed on 02 December 2010, the petition under 37 CFR 1.47(a) filed on 29 September 2010 was dismissed, without prejudice, because requirements (2) and (4) had not been satisfied.

Concerning requirement (2), counsel has filed a declaration signed by all of the inventors, rendering the issue under 37 CFR 1.47(a) moot.

With respect to requirement (4), the relevant policy was recently relaxed, such that the objection previously raised no longer applies with respect to satisfying the requirements of 37 CFR 1.497(a) and (b). Accordingly, the declaration filed on 06 January 2011 is acceptable.

DECISION

The petition under 37 CFR 1.47(a) is **DISMISSED AS MOOT**, without prejudice.

This application is being returned to the Office of Patent Application Processing. Its date under 35 U.S.C. 371(c)(1), (2) and (4) is **06 January 2011**.

/George Dombroske/
George Dombroske
PCT Legal Examiner
Office of PCT Legal Administration
Tel: (571) 272-3283

2 7 SEP 2010

United States Patent and Trademark Office

Commissioner for Patents
United States Patent and Trademark Office
P.O. Box 1450
Alexandria, VA 22313-1450
www.uspto.gov

SHEEHAN PHINNEY BASS & GREEN, PA
c/o PETER NIEVES
1000 ELM STREET
MANCHESTER NH 03105-3701

In re Application of	:	
Arai	:	
Application No. 12/602,366	:	
PCT No.: PCT/JP2008/056035	:	
Int. Filing Date: 28 March 2008	:	DECISION
Priority Date: 30 May 2007	:	
Atty. Docket No.: 17998-6111	:	
For: Network Communication Device And Network Communication Method	:	

This is in response to the renewed submission under 37 CFR 1.42 filed on 23 August 2010.

DISCUSSION

In a Decision mailed on 21 June 2010, the declaration filed on 30 November 2009 was treated under 37 CFR 1.42 and not accepted, without prejudice, because

> Examination of the declaration reveals that it provides citizenship, residence and mailing address data, but it is unclear whether they pertain to the inventor or the legal representative. In addition, the submission does not appear to explicitly state whether Yuki Arai is deceased or incapacitated, or to indicate whether relief is sought under 37 CFR 1.42 or 1.43. Additionally, the declaration does not appear to comply with 37 CFR 1.69(b). For these reasons, it would not be appropriate to accept the declaration under 37 CFR 1.42 (or 1.43) at this time.

In response, counsel explicitly seeks relief under 37 CFR 1.42, and provides a new declaration. Inspection of said declaration reveals that it has been signed by Nanao Arai on behalf of deceased inventor Yuki Arai. The declaration states the citizenship, residence and postal address for both the decedent and the legal representative. However, the declaration does not appear to be accompanied by the statement required by 37 CFR 1.69(b). Accordingly, it would not be appropriate to accept the declaration at this time.

DECISION

The declaration is **NOT ACCEPTED** under 37 CFR 1.42, without prejudice.

If reconsideration on the merits of this matter is desired, a proper response must be filed within **TWO (2) MONTHS** from the mail date of this decision. Any reconsideration request should include a cover letter entitled "Renewed Submission Under 37 CFR 1.42." Extensions of time may be obtained under 37 CFR 1.136(a). Failure to timely file a proper response will result in **ABANDONMENT**.

Any further correspondence with respect to this matter may be filed electronically via EFS-Web selecting the document description "Petition for review and processing by the PCT Legal Office" or by mail addressed to Mail Stop PCT, Commissioner for Patents, Office of PCT Legal Administration, P.O. Box 1450, Alexandria, Virginia 22313-1450, with the contents of the letter marked to the attention of the Office of PCT Legal Administration.

/George Dombroske/
George Dombroske
PCT Legal Examiner
Office of PCT Legal Administration
Tel: (571) 272-3283

United States Patent and Trademark Office

Commissioner for Patents
United States Patent and Trademark Office
P.O. Box 1450
Alexandria, VA 22313-1450
www.uspto.gov

MAILED

JAN 27 2011

PCT LEGAL ADMINISTRATION

SHEEHAN PHINNEY BASS & GREEN, PA
c/o PETER NIEVES
1000 ELM STREET
MANCHESTER NH 03105-3701

In re Application of
Arai
Application No. 12/602,366
PCT No.: PCT/JP2008/056035
Int. Filing Date: 28 March 2008
Priority Date: 30 May 2007
Atty. Docket No.: 17998-6111
For: Network Communication Device And Network Communication Method

DECISION

This is in response to the renewed submission under 37 CFR 1.42 filed on 29 November 2010.

DISCUSSION

In a decision mailed on 27 September 2010, the declaration filed on 23 August 2010 was not accepted under 37 CFR 1.42, without prejudice, because it did not appear to be accompanied by the statement required by 37 CFR 1.69(b).

In response, counsel has provided an appropriate statement that "the translation submitted with the declaration is accurate." As such, the declaration is now acceptable for purposes of compliance with 37 CFR 1.42 and 37 CFR 1.497(a) and (b).

DECISION

The declaration filed on 23 August 2010 is **ACCEPTED** under 37 CFR 1.42..

This application is being returned to the Office of Patent Application Processing. Its date under 35 U.S.C. 371(c)(1), (2) and (4) is **23 August 2010**.

/George Dombroske/
George Dombroske
PCT Legal Examiner
Office of PCT Legal Administration
Tel: (571) 272-3283

UNITED STATES PATENT AND TRADEMARK OFFICE

Commissioner for Patents
United States Patent and Trademark Office
P.O. Box 1450
Alexandria, VA 22313-1450
www.uspto.gov

FISH & RICHARDSON P.C. (SD)
P.O. BOX 1022
MINNEAPOLIS MN 55440-1022

MAILED
MAY 06 2011
OFFICE OF PETITIONS

In re Application of	:	
Ramon Alarcon	:	
Application No. 12/602,386	:	DECISION ON PETITION
Filed: November 30, 2009	:	TO WITHDRAW
Attorney Docket No. **237710003US1**	:	FROM RECORD
	:	

This is a decision on the Request to Withdraw as attorney or agent of record under 37 CFR § 1.36(b), filed April 19, 2011.

The request is **NOT APPROVED**.

The request cannot be approved because the requested change in the correspondence address is improper. I will also like to bring to petitioner attention that the attorney cannot withdraw attorneys' by Customer Number when the power of attorney was originally granted individually in the Combined Declaration and Power of Attorney filed November 30, 2009.

The Office will only accept correspondence address changes to the most current address information provided for the assignee of the entire interest *who properly became of record under 37 CFR 3.71,* or, if no assignee of the entire interest has properly been made of record, the most current address information provided for the first named inventor. 37 CFR 3.71(c) states:

> *An assignee becomes of record either in a national patent application or a reexamination proceeding by filing a statement in compliance with § 3.73(b) that is signed by a party who is authorized to act on behalf of the assignee.*

The assignee must establish its ownership of the patent to the satisfaction of the Director. In this regard, the statement under 37 CFR 3.73(b) must have either: (i) documentary evidence of a chain of title from the original owner to the assignee (*e.g.*, copy of an executed assignment), and a statement affirming that the documentary evidence of the chain of title from the original owner to the assignee was or concurrently is being submitted for recordation pursuant to § 3.11; or (ii) a statement specifying where documentary evidence of a chain of title from the original owner to

the assignee is recorded in the assignment records of the Office (*e.g.*, reel and frame number).

Therefore, as there is currently no Statement under 37 CFR 3.73(b) with the current assignee information of record in the instant application, the Office cannot change the correspondence address to the address on the Request to Withdraw at this present time.

All future communications from the Office will continue to be directed to the above-listed address until otherwise notified by applicant or the assignee that has properly intervened.

Telephone inquires concerning this decision should be directed to JoAnne Burke at 571-272-4584.

JoAnne Burke
Petitions Examiner
Office of Petitions

UNITED STATES PATENT AND TRADEMARK OFFICE

Commissioner for Patents
United States Patent and Trademark Office
P.O. Box 1450
Alexandria, VA 22313-1450
www.uspto.gov

FISH & RICHARDSON P.C. (SD)
P.O. BOX 1022
MINNEAPOLIS MN 55440-1022

MAILED

JUN 06 2011

OFFICE OF PETITIONS

In re Application of	:	
Ramon Alarcon	:	DECISION ON PETITION
Application No. 12/602,386	:	TO WITHDRAW
Filed: November 30, 2009	:	FROM RECORD
Attorney Docket No. **237710003US1**	:	

This is a decision on the renewed request to withdraw as attorney of record under 37 CFR § 1.36(b), filed May 27, 2011.

The request is **APPROVED**.

A grantable request to withdraw as attorney/agent of record must be signed by every attorney/agent seeking to withdraw or contain a clear indication that one attorney is signing on behalf of another/others. The Office requires the practitioner(s) requesting withdrawal to certify that he, she, or they have: (1) given reasonable notice to the client, prior to the expiration of the response period, that the practitioner(s) intends to withdraw from employment; (2) delivered to the client or a duly authorized representative of the client all papers and property (including funds) to which the client is entitled; and (3) notified the client of any responses that may be due and the time frame within which the client must respond , pursuant to 37 CFR 10.40.

The request was signed by William E. Hunter on behalf of all attorneys of record who are associated with the above-identified application.

All attorneys/agents associated with the above-identified application have been withdrawn. Applicant is reminded that there is no attorney of record at this time.

All future correspondence will be directed to the first named inventor Joseph Randazza at the address list listed in the request.

There is no outstanding Office action mailed that requires a reply from the applicant.

Telephone inquiries concerning this decision should be directed to the undersigned at 571-272-4584.

JoAnne Burke
Petitions Examiner
Office of Petitions

cc: Ramon Alarcon
250 Vista De Sierra
Los Gatos, CA 95030

UNITED STATES PATENT AND TRADEMARK OFFICE

UNITED STATES DEPARTMENT OF COMMERCE
United States Patent and Trademark Office
Address: COMMISSIONER FOR PATENTS
P.O. Box 1450
Alexandria, Virginia 22313-1450
www.uspto.gov

APPLICATION NO.	FILING DATE	FIRST NAMED INVENTOR	ATTORNEY DOCKET NO.	CONFIRMATION NO.
12/602,433	11/30/2009	Yoshihiro Kondoh	107156.00417	4862

4372 7590 08/02/2010
ARENT FOX LLP
1050 CONNECTICUT AVENUE, N.W.
SUITE 400
WASHINGTON, DC 20036

EXAMINER

ART UNIT	PAPER NUMBER
3726	

NOTIFICATION DATE	DELIVERY MODE
08/02/2010	ELECTRONIC

Please find below and/or attached an Office communication concerning this application or proceeding.

The time period for reply, if any, is set in the attached communication.

Notice of the Office communication was sent electronically on above-indicated "Notification Date" to the following e-mail address(es):

DCIPDocket@arentfox.com
IPMatters@arentfox.com
Patent_Mail@arentfox.com

UNITED STATES PATENT AND TRADEMARK OFFICE

Commissioner for Patents
United States Patent and Trademark Office
P.O. Box 1450
Alexandria, VA 22313-1450
www.uspto.gov

ARENT FOX LLP
1050 CONNECTICUT AVENUE, N.W.
SUITE 400
WASHINGTON DC 20036

In re Application of	:	
KONDOH, YOSHIHIRO et al.	:	DECISION ON REQUEST TO
Application No. 12/602433	:	PARTICIPATE IN PATENT
Filed: Nov. 30, 2009	:	PCT/PROSECUTION HIGHWAY
Attorney Docket No. 107156.00417	:	PROGRAM AND PETITION
Title: SMALL-DIAMETER DEEP HOLE DRILL AND A MICRO DEEP HOLE DRILLING METHOD	:	37 CFR 1.102(d)

This is a decision on the request to participate in the Patent Prosecution Highway (PPH) program and the petition under 37 CFR 1.102(d), filed July 29, 2010, to make the above-identified application special.

The request and petition are Dismissed.

A grantable request to participate in the PPH program and petition to make special require:
(1) The U.S. application must disclose an eligible relationship to one or more PCT applications filed in the KIPO, JPO, EPO or USPTO;
(2) Applicant must submit a copy of the allowable/patentable claim(s) from the PCT application(s) latest international work product (the written opinion or the IPER) along with an English translation thereof and a statement that the English translation is accurate;
(3) All the claims in the U.S. application must sufficiently correspond or be amended to sufficiently correspond to the allowable/patentable claim(s) in the PCT application(s);
(4) Examination of the U.S. application has not begun;
(5) Applicant must submit a copy of the latest international work product from the PCT application containing the allowable/patentable claim(s) along with an English translation thereof and a statement that the English translation is accurate; and
(6) Applicant must submit an IDS listing the documents cited by the PCT examiner in the international work product along with copies of documents except U.S. patents or U.S. patent application publications.

The request to participate in the PPH program and petition met all conditions except Item #5 above. The request to participate in the PPH program and petition fails to include a statement that the English translation of the allowable claims in the foreign application is accurate.

In the office action of April 20, 2009, the JPO rejected claim 7 in the JPO application as unpatentable. Please verify the allowability of Claim 7 in the JPO application/patent, with reference to sources, as claim 7 in the JPO application is substantially the same as claim 7 in the U.S. application.

Applicant is encouraged to cite and submit all relevant prior art references, if any, to facilitate examination in this application.

Applicant is given a time period of **ONE MONTH or THIRTY DAYS**, whichever is longer, from the mailing date of this decision to correct the deficiencies. **NO EXTENSION OF TIME UNDER 37 CFR 1.136 IS PERMITTED.** If the deficiencies are not corrected with the time period given, the application will await action in its regular turn. Response must be filed via EFS-Web.

Telephone inquiries concerning this decision should be directed to Henry C. Yuen at 571-272-4856.

Petition is **dismissed**.

/Henry C. Yuen/

Henry C. Yuen, Special Programs Examiner
Technology Center 3700 – Mechanical Engineering,
Manufacturing and Products
571-272-4856

UNITED STATES PATENT AND TRADEMARK OFFICE

UNITED STATES DEPARTMENT OF COMMERCE
United States Patent and Trademark Office
Address: COMMISSIONER FOR PATENTS
P.O. Box 1450
Alexandria, Virginia 22313-1450
www.uspto.gov

APPLICATION NO.	FILING DATE	FIRST NAMED INVENTOR	ATTORNEY DOCKET NO.	CONFIRMATION NO.
12/602,433	11/30/2009	Yoshihiro Kondoh	107156.00417	4862

4372 7590 08/31/2010
ARENT FOX LLP
1050 CONNECTICUT AVENUE, N.W.
SUITE 400
WASHINGTON, DC 20036

EXAMINER

ART UNIT	PAPER NUMBER
3726	

NOTIFICATION DATE	DELIVERY MODE
08/31/2010	ELECTRONIC

Please find below and/or attached an Office communication concerning this application or proceeding.

The time period for reply, if any, is set in the attached communication.

Notice of the Office communication was sent electronically on above-indicated "Notification Date" to the following e-mail address(es):

DCIPDocket@arentfox.com
IPMatters@arentfox.com
Patent_Mail@arentfox.com

UNITED STATES PATENT AND TRADEMARK OFFICE

Commissioner for Patents
United States Patent and Trademark Office
P.O. Box 1450
Alexandria, VA 22313-1450
www.uspto.gov

ARENT FOX LLP
1050 CONNECTICUT AVENUE, N.W.
SUITE 400
WASHINGTON DC 20036

In re Application of	:	
KONDOH, YOSHIHIRO et al.	:	DECISION ON REQUEST TO
Application No. 12/602,433	:	PARTICIPATE IN PATENT
Filed: Nov. 30, 2009	:	PCT/PROSECUTION HIGHWAY
Attorney Docket No. 107156.00417	:	PROGRAM AND PETITION
Title: SMALL-DIAMETER DEEP HOLE DRILL AND A MICRO DEEP HOLE DRILLING METHOD	:	37 CFR 1.102(d)

This is a decision on the renewed request to participate in the Patent Prosecution Highway (PPH) program and the petition under 37 CFR 1.102(d), filed August 27, 2010, to make the above-identified application special.

The request and petition are Granted.

A grantable request to participate in the PPH program and petition to make special require:
(1) The U.S. application must disclose an eligible relationship to one or more PCT applications filed in the KIPO, JPO, EPO or USPTO;
(2) Applicant must submit a copy of the allowable/patentable claim(s) from the PCT application(s) latest international work product (the written opinion or the IPER) along with an English translation thereof and a statement that the English translation is accurate;
(3) All the claims in the U.S. application must sufficiently correspond or be amended to sufficiently correspond to the allowable/patentable claim(s) in the PCT application(s);
(4) Examination of the U.S. application has not begun;
(5) Applicant must submit a copy of the latest international work product from the PCT application containing the allowable/patentable claim(s) along with an English translation thereof and a statement that the English translation is accurate; and
(6) Applicant must submit an IDS listing the documents cited by the PCT examiner in the international work product along with copies of documents except U.S. patents or U.S. patent application publications.

In light of the petition being properly submitted, the request to participate in the PPH program and the petition comply with the above requirements. Accordingly, the above-identified application has been accorded "special" status.

The applicant is encouraged to cite and submit all relevant prior art references, if any, to facilitate examination in this application.

Telephone inquiries concerning this decision should be directed to Henry C. Yuen at 571-272-4856. All other inquiries concerning the examination or status of the application should be directed to David Bryant, the SPE of Art Unit 3726, and 571-272-4526 for Class 408/001 and also accessible in the PAIR system at http://www.uspto.gov/ebc.index.html.

Petition is **granted**.

/Henry C. Yuen/

Henry C. Yuen, Special Programs Examiner
Technology Center 3700 – Mechanical Engineering,
Manufacturing and Products
571-272-4856

UNITED STATES PATENT AND TRADEMARK OFFICE

UNITED STATES DEPARTMENT OF COMMERCE
United States Patent and Trademark Office
Address: COMMISSIONER FOR PATENTS
P.O. Box 1450
Alexandria, Virginia 22313-1450
www.uspto.gov

APPLICATION NO.	FILING DATE	FIRST NAMED INVENTOR	ATTORNEY DOCKET NO.	CONFIRMATION NO.
12/602,433	11/30/2009	Yoshihiro Kondoh	107156.00417	4862

4372 7590 12/23/2010
ARENT FOX LLP
1050 CONNECTICUT AVENUE, N.W.
SUITE 400
WASHINGTON, DC 20036

EXAMINER
HOWELL, DANIEL W

ART UNIT	PAPER NUMBER
3726	

NOTIFICATION DATE	DELIVERY MODE
12/23/2010	ELECTRONIC

Please find below and/or attached an Office communication concerning this application or proceeding.

The time period for reply, if any, is set in the attached communication.

Notice of the Office communication was sent electronically on above-indicated "Notification Date" to the following e-mail address(es):

DCIPDocket@arentfox.com
IPMatters@arentfox.com
Patent_Mail@arentfox.com

UNITED STATES PATENT AND TRADEMARK OFFICE

Commissioner for Patents
United States Patent and Trademark Office
P.O. Box 1450
Alexandria, VA 22313-1450
www.uspto.gov

ARENT FOX LLP
1050 CONNECTICUT AVENUE, N.W.
SUITE 400
WASHINGTON DC 20036

In re Application of: KONDOH, YOSHIHIRO et al Serial No.: 12/602,433 Filed: Nov. 30, 2009 Docket: 107156.00417 Title: SMALL-DIAMETER DEEP HOLE DRILL AND A MICRO DEEP HOLE DRILLING METHOD	::	DECISION ON REQUEST TO PARTICIPATE IN PATENT PROSECUTION HIGHWAY (PPH) AND PETITION TO MAKE SPECIAL UNDER 37 CFR 1.102(d)

This is a decision on the request to participate in the Patent Prosecution Highway (PPH) program and the petition under 37 CFR 1.102(d), filed Dec. 21, 2010, to make the above-identified application special.

The request and petition are **DENIED**.

A grantable request to participate in the PPH program and petition to make special require:

(1) The U.S. application must validly claim priority under 35 U.S.C. 119(a) to one or more corresponding application(s) filed in the JPO or to a PCT application that does not contain any priority claim, or the U.S. application must be a national stage entry of a PCT application that does not contain any priority claim;
(2) Applicant must submit a copy of the allowable/patentable claim(s) from the JPO application(s) along with an English translation thereof and a statement that the English translation is accurate;
(3) All the claims in the U.S. application must sufficiently correspond or be amended to sufficiently correspond to the allowable/patentable claim(s) in the JPO application(s);
(4) Examination of the U.S. application has not begun;
(5) Applicant must submit a copy of all the office actions from each of the JPO application(s) containing the allowable/patentable claim(s) along with an English translation thereof and a statement that the English translation is accurate; and

(6) Applicant must submit an IDS listing the documents cited by the JPO examiner in the JPO office action along with copies of documents except U.S. patents or U.S. patent application publications.

The request to participate in the PPH pilot program and petition met all conditions except Item #4 above. The petition make special under the PPH programs was granted on August 31, 2010. Afterwards, the examiner issued an Office action on the merits and allowed the case on Oct. 6, 2010. Subsequently on December 21, 2010, the applicant has chosen to abandon the case and filed a RCE to add additional claim(s). Therefore, the petition cannot be granted because an action on the merits was issued on August 31, 2010.

Applicant is encouraged to cite and submit all relevant prior art references, if any, to facilitate examination in this application.

Any inquiry regarding this decision should be directed to Henry Yuen, Special Program Examiner, at (571) 272-4856. All other inquiries concerning the examination or status of the application should be directed to Examiner Daniel Howell at 571-270-4478.

The petition is denied.

/Henry C. Yuen/

Henry C. Yuen
Special Programs Examiner
Technology Center 3700
Tel: 571-272-4856

1 4 SEP 2010

UNITED STATES PATENT AND TRADEMARK OFFICE

Commissioner for Patents
United States Patent and Trademark Office
P.O. Box 1450
Alexandria, VA 22313-1450
www.uspto.gov

J-TEK LAW PLLC
601 Pennsylvania Avenue, NW
Suite 900, South Building
Washington DC 20004

In re Application of	:	
KREUTER, Peter, et al.	:	
Application No.: 12/602,470	:	
PCT No.: PCT/EP2008/004205	:	DECISION
Int. Filing Date: 27 May 2008	:	
Priority Date: 31 May 2007	:	ON PETITION UNDER
Docket No.: MET001-00019	:	
For: METHOD AND DEVICE FOR	:	37 CFR 1.47(a)
REDUCING ROTATIONAL	:	
NON-UNIFORMITIES OF THE	:	
CRANKSHAFT OF AN INTERNAL	:	
COMBUSTION PISTON ENGINE	:	

This is a decision on applicants' Petition Under 37 CFR 1.47(a), filed in the United States Patent and Trademark Office (USPTO) on 02 July 2010.

BACKGROUND

On 05 April 2010, the Office mailed Notification of Missing Requirements (Form PCT/DO/EO/905) indicating that an oath or declaration and the surcharge for late filing of the search fee, examination fee or oath or declaration were required.

On 02 July 2010, applicants filed a petition under 37 CFR 1.47(a), a declaration and the fee for a one month extension of time.

DISCUSSION

A petition under 37 CFR 1.47 must be accompanied by: (1) the fee under 37 CFR 1.17(h), (2) proof of pertinent facts, namely that the inventor refuses to sign after being presented with the application papers or cannot be reached after diligent effort, (3) a statement of the last known address of the inventor, and (4) an oath or declaration by the 37 CFR 1.47(a) applicant on behalf of himself or herself and the nonsigning applicant.

Items (1) and (3) have been met. The petition fee has been paid. Applicant states the last known address of Mathias von Essen as Moerstorperstr. 42; 52477 Alsdorf; Germany.

Item (2) has not been satisfied. Applicants have provided a foreign language postal receipt for the mailing to the inventor, but have not furnished a translation. Non-translated, non-English materials cannot be considered. A translation of the receipt is required.

Item (4) has not been satisfied. The applicants in the national stage must match the applicants for the United States in the international application. 37 CFR 1.41(a)(4). The first named inventor in the international application is "KREUTER, Peter," but in the declaration the first named inventor is "Kreuter, Dr. -Ing. Peter".

CONCLUSION

For the above reasons, applicant's petition under 37 CFR 1.47(a) is **DISMISSED** without prejudice.

If reconsideration on the merits of this petition is desired, a proper response must be filed within **TWO (2) MONTHS** from the mail date of this decision. Failure to timely file the proper response will result in abandonment of this application. Extensions of time under 37 CFR 1.136(a) are available. Any reconsideration request should include a cover letter entitled "Renewed Petition Under 37 CFR 1.47(a)." No additional petition fee is required.

Any further correspondence with respect to this matter may be filed electronically via EFS-Web selecting the document description "Petition for review and processing by the PCT Legal Office" or by mail addressed to Mail Stop PCT, Commissioner for Patents, Office of PCT Legal Administration, P.O. Box 1450, Alexandria, Virginia 22313-1450, with the contents of the letter marked to the attention of the Office of PCT Legal Administration.

/Erin P. Thomson/

Erin P. Thomson
Attorney Advisor
PCT Legal Administration

Telephone: 571-272-3292

UNITED STATES PATENT AND TRADEMARK OFFICE

Commissioner for Patents
United States Patent and Trademark Office
P.O. Box 1450
Alexandria, VA 22313-1450
www.uspto.gov

MAILED

DEC 03 2010

PCT LEGAL ADMINISTRATION

J-TEK LAW PLLC
601 Pennsylvania Avenue, NW
Suite 900, South Building
Washington DC 20004

In re Application of
KREUTER, Peter, et al.
Application No.: 12/602,470
PCT No.: PCT/EP2008/004205
Int. Filing Date: 27 May 2008
Priority Date: 31 May 2007
Docket No.: MET001-00019
For: METHOD AND DEVICE FOR REDUCING ROTATIONAL NON-UNIFORMITIES OF THE CRANKSHAFT OF AN INTERNAL COMBUSTION PISTON ENGINE

DECISION

ON PETITION UNDER

37 CFR 1.47(a)

This is a decision on applicants' Petition Under 37 CFR 1.47(a), filed in the United States Patent and Trademark Office (USPTO) on 05 October 2010.

BACKGROUND

On 14 September 2010, the Office mailed Decision On Petition Under 37 CFR 1.47(a), dismissing applicants' petition without prejudice and setting a two month period for reply.

On 05 October 2010, applicants filed a renewed petition under 37 CFR 1.47(a).

DISCUSSION

A petition under 37 CFR 1.47 must be accompanied by: (1) the fee under 37 CFR 1.17(h), (2) proof of pertinent facts, namely that the inventor refuses to sign after being presented with the application papers or cannot be reached after diligent effort, (3) a statement of the last known address of the inventor, and (4) an oath or declaration by the 37 CFR 1.47(a) applicant on behalf of himself or herself and the nonsigning applicant.

Items (1) and (3) were previously satisfied. The petition fee has been paid. Applicant states the last known address of Mathias von Essen as Moerstorperstr. 42; 52477 Alsdorf; Germany.

Items (2) and (4) have now been satisfied. Applicants have provided the translation of the foreign language postal receipt and a declaration in compliance with 37 CFR 1.497(a)-(b) and 1.47.

CONCLUSION

For the above reasons, applicant's petition under 37 CFR 1.47(a) is **GRANTED**.

As provided in 37 CFR 1.47(a), a notice of the filing of this application will be forwarded to the nonsigning inventor at his last known address of record.

A notice of the filing of the application under 37 CFR 1.47(a) will be published in the Official Gazette.

This application is being forwarded to the National Stage Processing Branch of the Office of PCT Operations to continue national stage processing of the application, including accordation of a 35 U.S.C. §371(c)(1), (c)(2) and (c)(4) date of **05 October 2010**.

/Erin P. Thomson/

Erin P. Thomson
Attorney Advisor
PCT Legal Administration

Telephone: 571-272-3292

UNITED STATES PATENT AND TRADEMARK OFFICE

Commissioner for Patents
United States Patent and Trademark Office
P.O. Box 1450
Alexandria, VA 22313-1450
www.uspto.gov

MAILED

DEC 03 2010

PCT LEGAL ADMINISTRATION

Mathias von Essen
Moerstorperstr. 42
52477 Alsdorf
Germany

In re Application of
KREUTER, Peter, et al.
Application No.: 12/602,470
PCT No.: PCT/EP2008/004205
Int. Filing Date: 27 May 2008
Priority Date: 31 May 2007
Docket No.: MET001-00019
For: METHOD AND DEVICE FOR REDUCING ROTATIONAL NON-UNIFORMITIES OF THE CRANKSHAFT OF AN INTERNAL COMBUSTION PISTON ENGINE

Dear Mr. von Essen:

You are named as an inventor in the above-captioned United States national stage application, filed under the provisions of 37 CFR 1.47(a) and 35 U.S.C. 116. Should a patent be granted, you will be designated as an inventor.

As a named inventor, you are entitled to inspect any paper in the file wrapper of the application, order copies of all or any part thereof (at a prepaid cost per 37 CFR 1.19) or to make your position of record in the application. Alternatively, you may arrange to do any of the preceding through a registered patent agent or attorney presenting written authorization from you. The counsel for the applicant is listed below. Joining in the application would entail the filing of an appropriate oath or declaration by you pursuant to 37 CFR 1.63.

/Erin P. Thomson/

Erin P. Thomson
Attorney Advisor
PCT Legal Administration

Telephone: 571-272-3292

J-TEK LAW PLLC
601 Pennsylvania Avenue, NW
Suite 900, South Building
Washington DC 20004

UNITED STATES PATENT AND TRADEMARK OFFICE

Commissioner for Patents
United States Patent and Trademark Office
P.O. Box 1450
Alexandria, VA 22313-1450
www.uspto.gov

23413
CANTOR COLBURN, LLP
20 Church Street
22nd Floor
Hartford, CT 06103

MAILED
JUN 01 2011
PCT LEGAL ADMINISTRATION

In re Application of
GARCIA SABAN *et al*
U.S. Application No.: 12/602,495
PCT No.: PCT/ES2007/000335
Int. Filing Date: 07 June 2007
Priority Date: 01 June 2006
Attorney Docket No.: HER0094US
For: NOVEL SURFACE OF METAL IMPLANTS BASED ON TITANIUM, TO BE INSERTED INTO OSSEOUS TISSUE

DECISION

This is a decision on the response filed 17 March 2011 which is treated under 37 CFR 1.181. No fee is required.

BACKGROUND

On 30 November 2009, applicants filed papers to enter the national stage of PCT/EP2009/002364 using the USPTO EFS Web system. Several of these papers were received, but not scanned into the application including the English translation of the specification and the declaration.

On 02 April 2010, the United States Designated/Elected Office (DO/EO/US) mailed a Notification of Missing Requirements Under 35 U.S.C. 371 (Form PCT/DO/EO/905) indicating that an English translation, oath or declaration in compliance with 37 CFR 1.497(a) and (b), a processing fee, and a surcharge fee were required. Applicants were given two months to respond with extensions of time available under 37 CFR 1.136(a).

On 29 April 2010, applicants submitted a response claiming that an English translation, an executed declaration and appropriate fees were filed with the initial papers on 30 November 2009.

On 16 March 2011, the DO/EO/US mailed a Notification of a Defective Response (Form PCT/DO/EO/916) noting that an English translation, oath or declaration in compliance with 37 CFR 1.497(a) and (b), a processing fee and a surcharge fee were still required. Applicants were given one month to respond.

On 17 March 2011, applicants filed the subject response requesting that the

Form PCT/DO/EO/916 be withdrawn.

DISCUSSION

In the subject response, applicants claim that both an English translation of the application and an executed declaration were timely filed on 30 November 2009.

A review of the above-identified application does not show that these papers were located in the application. However, it appears that the original papers filed by applicants were received by the Office and not scanned in the subject application by mistake. USPTO computer records show that the following papers were filed in the subject application on 30 November 2009: an executed declaration and an English translation of the application. This mistake has now been corrected.

All appropriate papers have been scanned in the above-identified application.

DECISION

Applicants' petition under 37 CFR 1.181 is **GRANTED**.

The Form PCT/DO/EO/905 mailed 02 April 2010 and the Form PCT/DO/EO/916 mailed 16 March 2011 are **VACATED**.

An English translation of the subject application and an executed declaration were filed by applicants on 30 November 2009.

This application is being forwarded to the National Stage Processing Division of the Office of PCT Operations for continued processing.

James Thomson

James Thomson
Attorney Advisor
Office of PCT Legal Administration

Tel.: (571) 272-3302

United States Patent and Trademark Office

Commissioner for Patents
United States Patent and Trademark Office
P.O. Box 1450
Alexandria, VA 22313-1450
www.uspto.gov

WESTERMAN, HATTORI, DANIELS & ADRIAN, LLP
1250 CONNECTICUT AVENUE, NW
SUITE 700
WASHINGTON DC 20036

MAILED

MAR 10 2011

PCT LEGAL ADMINISTRATION

In re Application of Maezawa et al. Application No.: 12/602,616 PCT No.: PCT/JP2008/059133 Int. Filing Date: 19 May 2008 Priority Date: 12 July 2007 Attorney Docket No.: 091385 For: Liquid Crystal Panel And Liquid Crystal Display Apparatus	:	DECISION

This is in response to the Request For Corrected Filing Receipt filed on 09 April 2010.

BACKGROUND

International application PCT/JP2008/059133 was filed on 19 May 2008, claimed an earlier priority date of 12 July 2007, and designated the United States. The International Bureau transmitted a copy of the published international application to the USPTO on 15 January 2009. The period for payment of the basic national fee in the United States expired as of midnight on 12 January 2010. Applicants filed *inter alia* a basic national fee in 12/602,616 on 01 December 2009.

On 01 April 2010, a Filing Receipt and a Notice of Acceptance (Form PCT/DO/EO/903) were mailed. Both forms indicated the international filing date of the international application to be "05/19/2009."

DISCUSSION

Review of the instant application file reveals that it is the national stage under 35 U.S.C. of international application PCT/JP2008/059133, whose international filing date os 19 May 2008. Since a different international filing date is shown on the Receipt and the Notice of Acceptance mailed on 01 April 2010, both of said forms were issued in error, and both are hereby **VACATED**.

DECISION

The request is **GRANTED**.

This application is being returned to the Office of Patent Application Processing for the preparation and mailing of a Notice of Acceptance (Form PCT/DO/EO/903) showing the correct international filing date.

/George Dombroske/
George Dombroske
PCT Legal Examiner
Office of PCT Legal Administration
Tel: (571) 272-3283

UNITED STATES PATENT AND TRADEMARK OFFICE

Commissioner for Patents
United States Patent and Trademark Office
P.O. Box 1450
Alexandria, VA 22313-1450
www.uspto.gov

MAIL

SEP 01 2010
DIRECTOR'S OFFICE
TECHNOLOGY CENTER 2600

FITZPATRICK CELLA HARPER & SCINTO
1290 Avenue of the Americas
NEW YORK NY 10104-3800

In re Application of	:	
YAMAMOTO, TAKAHISA, et al.	:	DECISION ON REQUEST TO
Application No. 12/602,628	:	PARTICIPATE IN PATENT
Filed: April 20, 2010	:	PROSECUTION HIGHWAY
Attorney Docket No. **00862.135267**	:	PROGRAM AND PETITION
	:	TO MAKE SPECIAL UNDER
	:	37 CFR 1.102(d)

This is a decision on the request to participate in the PCT Patent Prosecution Highway (PPH) pilot program and the petition under 37 CFR 1.102(d), filed July 8, 2010 to make the above-identified application special.

The request and petition are **GRANTED**.

A grantable request to participate in the PCT-PPH pilot program and petition to make special require:

(1) The U.S. application be (a) a national stage entry of the corresponding PCT application, or (b) a national stage entry of another PCT application which claims priority to the corresponding PCT application, or (c) a national stage application that claims domestic/foreign priority to the corresponding PCT application, (d) a national application which forms the basis for the priority claim in the corresponding PCT application, or (e) a continuation application of the U.S. application which satisfies one of the above (a) to (d) scenarios.
(2) A copy of the latest international work product (WO/ISA, WO/IPEA, or IPER) in the corresponding PCT application(s) which indicates at least one claim in the PCT application has novelty, inventive step, and industrial applicability.
(3) A copy of all claims which were indicated as having novelty, inventive step and industrial applicability in the corresponding PCT application(s).
(4) English translations of the documents in (2) and (3) (if the documents are not in the English language).
(5) All the claims in the U.S. application must sufficiently correspond or be amended to sufficiently correspond to the claims which were indicated as having novelty, inventive step, and industrial applicability in the corresponding PCT application(s).
(6) Examination of the U.S. application has not begun;

(7) An information disclosure statement listing the documents cited in the international work products (ISR, WO/ISA. WO/IPEA, IPER) of the corresponding PCT application(s) and
(8) The petition fee under 37 CFR 1.17(h).

The request to participate in the PCT-PPH pilot program and petition comply with the above requirements. Accordingly, the above-identified application has been accorded "special" status.

Telephone inquiries concerning this decision should be directed to Michael Horabik at 571-272-3068.

All other inquiries concerning the examination or status of the application should be directed to Patent Application Information Retrieval (PAIR) system.

The application is being forwarded to the examiner for action on the merits commensurate with this decision.

/Kenneth A. Wieder/

Kenneth A. Wieder
Quality Assurance Specialist
Technology Center 2600
Communications

UNITED STATES PATENT AND TRADEMARK OFFICE

UNITED STATES DEPARTMENT OF COMMERCE
United States Patent and Trademark Office
Address: COMMISSIONER FOR PATENTS
P.O. Box 1450
Alexandria, Virginia 22313-1450
www.uspto.gov

APPLICATION NO.	FILING DATE	FIRST NAMED INVENTOR	ATTORNEY DOCKET NO.	CONFIRMATION NO.
12/602,629	01/25/2010	Deuk Soo Kim	P10264US	6545

86144 7590 11/08/2010
LRK Patent Law Firm
1952 Gallows Rd
Suite 200
Vienna, VA 22182

EXAMINER
SCHECHTER, ANDREW M

ART UNIT	PAPER NUMBER
2857	

MAIL DATE	DELIVERY MODE
11/08/2010	PAPER

Please find below and/or attached an Office communication concerning this application or proceeding.

The time period for reply, if any, is set in the attached communication.

UNITED STATES PATENT AND TRADEMARK OFFICE

Commissioner for Patents
United States Patent and Trademark Office
P.O. Box 1450
Alexandria, VA 22313-1450
www.uspto.gov

LRK Patent Law Firm
1952 Gallows Rd
Suite 200
Vienna VA 22182

In re Application of	
KIM et al.	**: DECISION ON REQUEST TO**
Application No.: 12/602,629	**: PARTICIPATE IN THE PATENT**
Filed: 25 January 2010	**: PROSECUTION HIGHWAY**
Attorney Docket No.: P10264US	**: PROGRAM AND PETITION**
For: AGING STATUS DIAGNOSTIC	**: TO MAKE SPECIAL UNDER**
APPARATUS FOR POWER	**: 37 CFR 1.102(a)**
CONVERSION SYSTEM, AND	
METHOD THEIR OF	

This is a decision on the request to participate in the Patent Prosecution Highway (PPH) program and the petition under 37 CFR 1.102(a), filed 13 October 2010, to make the above-identified application special.

The request and petition are **GRANTED**.

Discussion

A grantable request to participate in the PPH program and petition to make special require:

1. The U.S. application is

    a. a Paris Convention application which either
        i. validly claims priority under 35 U.S.C. 119(a) and 37 CFR 1.55 to one or more applications filed in the KIPO, or
        ii. validly claims priority under 35 U.S.C. 119(a)/365(a) to a PCT application that contains no priority claims,

    or

    b. a national stage application under the PCT (an application which entered the national stage in the U.S. from a PCT international application after compliance with 35 U.S.C. 371), which PCT application
        i. validly claims priority under 35 U.S.C. 365(b) to an application filed in the KIPO, or
        ii. validly claims priority under 35 U.S.C. 365(b) to a PCT application that contains no priority claims, or
        iii. contains no priority claim,

    or

c. a so-called bypass application filed under 35 U.S.C. 111(a) which validly claims benefit under 35 U.S.C. 120 to a PCT application, which PCT application
    i. validly claims priority under 35 U.S.C. 365(b) to an application filed in the KIPO, or
    ii. validly claims priority under 35 U.S.C. 365(b) to a PCT application that contains no priority claims, or
    iii. contains no priority claim;

2. Applicant must submit a copy of:
    a. The allowable/patentable claim(s) from the KR application(s);
    b. An English translation of the allowable/patentable claim(s), and
    c. A statement that the English translation is accurate (if the claims were published in a language other than English);
3. Applicant must:
    a. Ensure that all the claims in the U.S. application must sufficiently correspond or be amended to sufficiently correspond to the allowable/patentable claim(s) in the KR application(s), and
    b. Submit a claims correspondence table in English;
4. Examination of the U.S. application has not begun;
5. Applicant must submit:
    a. A copy of all the office actions (which are relevant to patentability), excluding "Decision to Grant a Patent" from each of the KR application(s) containing the allowable/patentable claim(s);
    b. An English language translation of the KIPO office action; and
    c. A statement that the English translation is accurate (if the office actions are not in the English language);
6. Applicant must submit:
    a. An IDS listing the documents cited by the KIPO examiner in the KIPO office action (unless already filed in this application); and
    b. Copies of all the documents cited in the KIPO office action, except U.S. patents or U.S. patent application publications (unless already filed in this application);

The request to participate in the PPH program and petition comply with the above requirements. Accordingly, the above-identified application has been accorded "special" status.

Any response must be submitted via EFS-Web.

Telephone inquiries concerning this decision should be directed to Lee W. Young at 571-272-4549.

All other inquiries concerning the examination or status of the application is accessible in the PAIR system at http://uspto.gov/ebc/index.html.

Lee W. Young
TQAS
Technology Center 2800

UNITED STATES PATENT AND TRADEMARK OFFICE

Commissioner for Patents
United States Patent and Trademark Office
P.O. Box 1450
Alexandria, VA 22313-1450
www.uspto.gov

ALSTON & BIRD LLP
BANK OF AMERICA PLAZA
101 SOUTH TRYON STREET, SUITE 4000
CHARLOTTE NC 28280-4000

MAILED
DEC 06 2010
OFFICE OF PETITIONS

In re Application of	:	
David N. HAYES, et al	:	
Application No. 12/602,649	:	DECISION ON PETITION
Filed: May 26, 2010	:	TO WITHDRAW
Attorney Docket No. 03505/381731	:	FROM RECORD

This is a decision on the Request to Withdraw as attorney or agent of record under 37 C.F.R. § 1.36(b), filed October 26, 2010.

The request is **NOT APPROVED.**

The Office will no longer accept address changes to a new practitioner or law firm filed with a Request, absent the filing of a power of attorney to the new representative. The Office will either change the correspondence address of record to the most current address information provided for the assignee of the entire interest who properly became of record under 37 CFR 3.71 or, if no assignee of the entire interest has properly been made of record under 37 CFR 3.71, the most current address information provided for the first named inventor.

Accordingly, the request to withdraw from record cannot be approved because the correspondence address for future communications from the Office is not that of the first named inventor or an assignee who has properly been made of record under 37 CFR 3.71. In this regard, the chain of title in the statement under 37 CFR 3.73(b) filed October 26, 2010, is incomplete.

All future communications from the Office will continue to be directed to the above-identified address until otherwise properly notified.

Telephone inquiries concerning this decision should be directed to the undersigned at (571) 272- 6735.

/dcg/
Diane C. Goodwyn
Petitions Examiner
Office of Petitions

UNITED STATES PATENT AND TRADEMARK OFFICE

Commissioner for Patents
United States Patent and Trademark Office
P.O. Box 1450
Alexandria, VA 22313-1450
www.uspto.gov

MAILED

AUG 11 2011

PCT LEGAL ADMINISTRATION

ALBEMARLE CORPORATION
451 FLORIDA STREET
BATON ROUGE LA 70801-1765

In re Application of	:	
LAYMAN, William J., Jr., et al.	:	
Application No.: 12/602,650	:	
PCT No.: PCT/US2008/066218	:	
Int. Filing Date: 06 June 2008	:	
Priority Date: 07 June 2007	:	DECISION
Attorney's Docket No.: F1-7789-US	:	
For: LOW MOLECULAR WEIGHT BROMINATED POLYMERS AND THEIR USE IN THERMOPLASTIC FORMULATIONS	:	

Applicant's petition under 37 CFR 1.137(b), filed in the United States Patent and Trademark Office on 24 June 2011, is **GRANTED**.

Applicant states that the entire delay in filing the required reply from the due date for the required reply until the filing of a grantable petition under 37 CFR 1.137(b) was unintentional, as required by 37 CFR 1.137(b)(3). The appropriate reply and petition fee have been submitted. A terminal disclaimer is not required as the application was filed on or after 08 June 1995. Accordingly, all requirements under 37 CFR 1.137(b) have been satisfied.

The 24 June 2011 declaration of the inventors complies with 37 CFR 1.497(a)-(b).

This application is being referred to the National Stage Processing Branch of the Office of Patent Application Processing for continued processing in accordance with this decision.

/Erin P. Thomson/

Erin P. Thomson
Attorney Advisor
PCT Legal Administration

Telephone: 571-272-3292

UNITED STATES PATENT AND TRADEMARK OFFICE

07 SEP 2010

Commissioner for Patents
United States Patent and Trademark Office
P.O. Box 1450
Alexandria, VA 22313-1450
www.uspto.gov

PEARNE & GORDON LLP
1801 EAST 9TH STREET
SUITE 1200
CLEVELAND OH 44114-3108

In re Application of:	:	
REINHARD-HERRSCHER, Fabienne, et al.	:	
U.S. Application No.: 12/602,664	:	DECISION
PCT Application No.: PCT/EP2008/03938	:	(37 CFR1.182)
International Filing Date: 16 May 2008	:	
Priority Date: 21 June 2007	:	
Attorney's Docket No.: AEG-45944	:	
For: COOKING OVEN WITH	:	
OXYGENATING MEANS AND	:	
METHOD FOR OPERATING SAME	:	

This decision is issued in response to the "Petition" filed 09 August 2010, treated herein 37 CFR 1.182. The required petition fee has been paid.

BACKGROUND

On 08 June 2010, this Office mailed a communication indicating that a petition under 37 CFR 1.182 was required to clarify the record as to the correct international application number for the present national stage application. The communication noted that the original application submission on 02 December 2009 referenced two different international applications (PCT/**EP**2008/003938 and PCT/**US**2008/003938).

On 09 August 2010, applicant filed the "Petition" considered herein.

DISCUSSION

The present petition confirms that correct international application number for the present national stage application is PCT/**EP**2008/003938, and it notes that the correct international application number was listed on the application data sheet (ADS) included in the materials filed on 08 June 2010. The petition included payment of the $400 petition fee required with respect to a petition under 37 CFR 1.182.

The present submission satisfies the requirements for a grantable petition to correct the error in the international application number indicated during the electronic filing process. Accordingly, the materials filed herein on 02 December 2009, including the payment of the basic national fee, will be treated as having been directed to PCT/EP2008/003938. It is noted that such materials, including payment of the U.S. basic national fee, were filed prior to the expiration of

thirty months from the priority date of such application, thereby avoiding abandonment of the international application with respect to the United States.

CONCLUSION

The petition under 37 CFR 1.182 is **GRANTED**.

The materials filed herein on 02 December 2009 will be treated as the U.S. national stage of PCT/**EP**2008/003938.

The application is being referred to the National Stage Processing Branch of the Office of PCT Operations for further processing in accordance with this decision.

Richard M. Ross
Attorney Advisor
Office of PCT Legal Administration
Telephone: (571) 272-3296
Facsimile: (571) 273-0459

UNITED STATES PATENT AND TRADEMARK OFFICE

Commissioner for Patents
United States Patent and Trademark Office
P.O. Box 1450
Alexandria, VA 22313-1450
www.uspto.gov

MERCK
126 East Lincoln Ave
RY60-30
Rahway NJ 07065

MAILED
JUN 24 2011
PCT LEGAL ADMINISTRATION

In re Application of :
Labroli, Marc,A. et al. :
Application No.: 12/602716 :
PCT No.: PCT/US2008/007009 :
Int. Filing Date: 04 June 2008 : DECISION ON PETITION
Priority Date: 07 June 2007 :
ATTY Docket No.: OC06559US01 : UNDER 37 CFR 1.137(b)
For: SYNTHESIS OF :
SUBSTITUTED-3-AMINOPYRAZOLES :

This decision is in response to applicant's PETITION UNDER 37 C.F.R. 1.137(b) filed in the United States Patent and Trademark Office (USPTO) on 12 May 2011.

BACKGROUND

On 04 June 2008, applicant filed international application, PCT/US2008/007009, which claimed priority of an earlier U.S. provisional application filed 07 June 2007. The thirty-month period for paying the basic national fee in the United States expired on 07 December 2009.

On 02 December 2009, applicant filed national stage papers with the United States Designated/Elected Office (DO/EO/US). The submission was accompanied by, *inter alia*, the basic national fee required by 35 U.S.C. 371(c)(1).

On 12 April 2010, the DO/EO/US mailed a Notification of Missing Requirements Under 35 U.S.C. 371 (Form PCT/DO/EO/905), which indicated that an oath or declaration in compliance with 37 CFR 1.497 must be filed.

On 13 June 2010, the international application PCT/US2008/007009 became abandoned as to the United States for failure to timely respond to the Notification of Missing Requirements.

On 12 May 2011, the applicant filed the present petition under 37 CFR 1.137(b).

DISCUSSION

Under 37 CFR 1.137(b), a petition requesting that an application be revived on the grounds of unintentional abandonment must be accompanied by: (1) the required reply unless previously filed, (2) the petition fee as set forth in 37 CFR 1.17(m), (3) a statement that the entire delay in filing the required reply from the due date for the reply until the filing of a grantable petition was unintentional, and (4) a terminal disclaimer in the application was filed before 08 June 1995.

With regard to item (1), applicant has not provided the required reply under 35 U.S.C. 371. In particular, the declaration submitted with the petition is not in compliance with 37 CFR 1.497(d) in that the names of inventors "Marc A. LABROLI" and "Kaml PARUCH" (taken from the declaration filed 12 May 2011) are different from that shown in the published international application - "Marc A. LABRIOLI" and "Kamil PARUCH", respectively.

With regard to item (2), applicant has provided the required petition fee.

With regard to item (3), applicant has provided the required statement.

With regard to item (4), because the international application was filed after 08 June 1995, no terminal disclaimer is required.

Application No.: 12/602,716

CONCLUSION

For the reasons above, the petition under 37 CFR 1.137(b) is **DISMISSED** without prejudice.

If reconsideration on the merits of the petition is desired, a proper response must be filed within TWO (2) MONTHS from the mail date of this decision. Extensions of time are available under 37 CFR 1.136(a). Any reconsideration request should include a cover letter entitled "Renewed Petition Under 37 CFR 1.137(b)". No additional petition fee is required.

Any further correspondence with request to this matter may be filed electronically via EFS-Web selecting the document description "Petition for review and processing by the PCT Legal Office" or by mail addressed to Mail Stop PCT, Commissioner for Patents, Office of PCT Legal Administration, P.O. Box 1450, Alexandria, Virginia 22313-1450, with the contents of the letter marked to the attention of the Office of PCT Legal Administration.

Shane Thomas
Detailee, Office of PCT Legal Administration
Tel: (571) 272-6095

Bryan Lin
PCT Legal Examiner
Office of PCT Legal Administration

UNITED STATES PATENT AND TRADEMARK OFFICE

Commissioner for Patents
United States Patent and Trademark Office
P.O. Box 1450
Alexandria, VA 22313-1450
www.uspto.gov

MERCK
126 East Lincoln Ave
RY60-30
Rahway NJ 07065

MAILED
SEP 26 2011
PCT LEGAL ADMINISTRATION

In re Application of
LABROLI, Marc A.
Application No.: 12/602,716
PCT No.: PCT/US2008/007009
Filing Date: 04 June 2008
Priority Date: 07 June 2007
ATTY Docket No.: OC06559US01
For: SYNTHESIS OF
SUBSTITUTED-3-AMINOPYRAZOLES

DECISION ON RENEWED PETITION

UNDER 37 CFR 1.137(b)

This decision is in response to applicant's RENEWED PETITION UNDER 37 C.F.R. 1.137(b) filed in the United States Patent and Trademark Office (USPTO) on 11 August 2011.

BACKGROUND

On 04 June 2008, applicant filed international application, PCT/US2008/007009, which claimed priority of an earlier U.S. provisional application filed 07 June 2007. The thirty-month period for paying the basic national fee in the United States expired on 07 December 2009.

On 02 December 2009, applicant filed national stage papers with the United States Designated/Elected Office (DO/EO/US). The submission was accompanied by, *inter alia*, the basic national fee required by 35 U.S.C. 371(c)(1).

On 12 April 2010, the DO/EO/US mailed a Notification of Missing Requirements Under 35 U.S.C. 371 (Form PCT/DO/EO/905), which indicated that an oath or declaration in compliance with 37 CFR 1.497 must be filed.

On 13 June 2010, the international application PCT/US2008/007009 became abandoned as to the United States for failure to timely respond to the Notification of Missing Requirements.

On 12 May 2011, the applicant filed a petition under 37 CFR 1.137(b).

On 24 June 2011, the Office of PCT Legal Administration dismissed the petition under 37 CFR 1.137(b) as the required reply of a declaration in compliance with 37 CFR 1.497(d) was not submitted.

Application No.: 12/602,716

On 11 August 2011, the Applicant submitted the present renewed petition under 37 C.F.R. 1.137(b).

DISCUSSION

MPEP §1803.01(e) states under "Correction of Inventorship":

> [w]here the discrepancy between the name of the inventor indicated in the international application during the international phase and the name of the inventor as it appears in the oath or declaration submitted under 37 CFR 1.497 is the result of a typographical or transliteration error ... the Office should simply be notified of the error.

In the present petition, the applicant has notified the Office that inventor Marc A. Labroli's name was misspelled on the International Application, and inventor Kamil Paruch's name has been corrected on a subsequently executed oath, filed with the present petition on 11 August 2011.

Under 37 CFR 1.137(b), a petition requesting that an application be revived on the grounds of unintentional abandonment must be accompanied by: (1) the required reply unless previously filed, (2) the petition fee as set forth in 37 CFR 1.17(m), (3) a statement that the entire delay in filing the required reply from the due date for the reply until the filing of a grantable petition was unintentional, and (4) a terminal disclaimer in the application was filed before 08 June 1995.

With regard to item (1), applicant has provided the required reply under 35 U.S.C. 371.

With regard to item (2), applicant has provided the required petition fee.

With regard to item (3), applicant has provided the required statement.

With regard to item (4), because the international application was filed after 08 June 1995, no terminal disclaimer is required.

A review of the application file, specifically the papers filed with the present petition, reveals that the requirements of the 37 CFR 1.137(b) have now been satisfied.

The declaration of the inventors filed with the present petition is accepted as correcting typographical errors in the names of the inventors.

Application No.: 12/602,716

CONCLUSION

For the reasons above, the petition is **GRANTED**.

The application has an International Filing Date under 35 U.S.C. 363 of 04 June 2008, and a date under 35 U.S.C. 371(c)(1), (c)(2), and (c)(4) of 11 August 2011.

This application is being returned to the United States Designated/Elected Office (DO/EO/US) for continued processing.

Shane Thomas
Detailee, Office of PCT Legal Administration
Tel: (571) 272-6095

Richard Cole
PCT Legal Examiner
Office of PCT Legal Administration

13 AUG 2010

UNITED STATES PATENT AND TRADEMARK OFFICE

Commissioner for Patents
United States Patent and Trademark Office
P.O. Box 1450
Alexandria, VA 22313-1450
www.uspto.gov

LUCAS & MERCANTI, LLP
475 PARK AVENUE SOUTH
15TH FLOOR
NEW YORK NY 10016

In re Application of	:	
BERRINO, et al.	:	
U.S. Application No.: 12/602,827	:	DECISION ON PAPERS
PCT No.: PCT/EP2008/056928	:	
Int. Filing Date: 04 June 2008	:	UNDER 37 CFR 1.42
Priority Date: 07 June 2007	:	
Attorney's Docket No.: 1108.1065	:	
For: 5BETA, 14BETA-ANDROSTANE DERIVATIVES:		
USEFUL FOR THE TREATMENT OF	:	
RESTENOSIS AFTER ANGIOPLASTIC OR	:	
ENDOARTHERECTOMY....ORGAN FIBROSIS	:	

This decision is in response to applicant's combined declaration and power of attorney filed 03 May 2010. The response is being treated as a request for status pursuant to 37 CFR 1.42. No petition fee is required.

BACKGROUND

On 04 June 2007, applicants filed the above-referenced international application, which claimed a priority date of 07 June 2007. A copy of the international application was communicated to the United States Patent and Trademark Office from the International Bureau on 11 December 2008. Pursuant to 37 CFR 1.495, the deadline for payment of the basic national fee in the United States was to expire 30 months from the priority date, 07 December 2009.

On 03 December 2009, applicants filed a transmittal letter for entry into the national stage in the United States accompanied by the requisite basic national fee and a preliminary amendment.

On 12 April 2010, applicant was mailed a "NOTIFICATION OF MISSING REQUIREMENTS UNDER 35 U.S.C. 371" (Form PCT/DO/EO/905) informing applicant of the need to provide an oath or declaration of the inventors, in compliance with 37 CFR 1.497(a) and (b), identifying the application by the international application number and international filing date. Applicant was afforded two months to file the proper reply and informed that this period could be extended pursuant to 37 CFR 1.136(a).

On 03 May 2010, applicant filed the declaration discussed herein.

Application No.: 12/602,827

DISCUSSION

Pursuant to 37 CFR 1.42, first sentence:

"In case of the death of the inventor, the legal representative (executor, administrator, etc.) of the deceased inventor may make the necessary oath or declaration, and apply for and obtain a patent."

An examination of the filed declaration and power of attorney finds that the document lists the post office, residence and citizenship for both the deceased joint inventor Antonio Cascino and the legal representative to his estate, Marilena Cipollaro. In addition, this information has been provided for the additional inventors listed on the published international application. The declaration has been executed by the legal representative and the additional listed inventors. As such, the declaration is in compliance with 37 CFR 1.497(a)-(b).

In light of the above, it is proper to grant applicant's request at this time.

CONCLUSION

Applicant's request for status under 37 CFR 1.42 is **GRANTED**.

This application will be given an international application filing date of 04 June 2008 and a date of **03 May 2010** under 35 U.S.C. 371(c)(1), (c)(2) and (c)(4).

This application is being returned to the DO/EO/US for processing in accordance with this decision.

Derek A. Putonen
Attorney Advisor
Office of PCT Legal Administration
Tel: 571-272-3294

UNITED STATES PATENT AND TRADEMARK OFFICE

Commissioner for Patents
United States Patent and Trademark Office
P.O. Box 1450
Alexandria, VA 22313-1450
www.uspto.gov

17 SEP 2010

Drinker Biddle & Reath (DC)
1500 K Street, N.W.
Suite 1100
Washington, D.C. 20005-1209

In re Application of KATOU, et al.	:	
Application No.: 12/602,870	:	
PCT No.: PCT/JP2008/059570	:	DECISION ON REQUEST
Int. Filing Date: 23 May 2008	:	
Priority Date: 05 June 2007	:	
Attorney Docket No.: 48494-0081 (444248)	:	
For: HAMMERING TOOL		

This decision is issued in response to applicants' "Response to Notification of Missing Requirements under 35 U.S.C. 371 in the U.S. Designated/Elected Office (DO/EO/US)" filed 04 May 2010. Applicants are notifying the Office that the name of the third inventor is Yoshitaka OTSUKA as indicated on the declaration rather than Yoshitaka OOTSUKA as indicated on the published international application. Applicants' request has been treated under 37 CFR 1.181 to accept the declaration filed 03 December 2009. No petition fee is due.

Petitioner states that "the last name of the third inventor is spelled correctly as Yoshitaka OTSUKA on the executed Declaration submitted on December 03, 2009." Applicants' statements are construed as a statement that the spelling error contained in the international application resulted from a typographical or transliteration error; applicants must inform this Office immediately if this is not a proper interpretation of this statement. As indicated in Section 201.03 of the Manual of Patent Examining Procedure, where a typographical or transliteration error in the spelling of an inventor's name is discovered, a petition under 37 CFR 1.48(a) is not required. Accordingly, petitioner's explanation is accepted and noted for the record and the declaration filed 03 December 2009 has been accepted.

For the reasons above, the request is **GRANTED**. This application is being returned to the United States Designated/Elected Office for processing in accordance with this decision.

Anthony Smith
Attorney-Advisor
Office of PCT Legal Administration
Tel: (571) 272-3298
Fax: (571) 273-0459

What is claimed is:

1. A method for auto-calibrated measurement using an AC modulated sensor, comprising the steps of:

providing an AC excitation signal;

obtaining a calibration signal by rectifying the AC excitation signal;

obtaining a measurement signal by applying the AC excitation signal to a sensor circuit;

summing the calibration signal and the measurement signal;

providing a computer readable storage medium having encoded thereon computer readable instructions capable of instructing a computer to:

digitize the summed signal;

calculate an amplitude of the first harmonic of the digitized summed signal;

calculate an amplitude of an additional harmonic of the digitized summed signal wherein the additional harmonic is selected from any of the even harmonics of the summed signal; and

divide the amplitude of the first harmonic by the amplitude of the additional harmonic to obtain an auto-calibrated measurement.

2. The method of claim 1 wherein the additional harmonic is the second harmonic of the digitized summed signal.

3. The method of claim 1 wherein the AC excitation signal is rectified by applying the AC excitation signal to a synchronous rectifier.

4. The method of claim 1 wherein the sensor circuit is a bridge-type transducer.

5. The method of claim 1 wherein the sensor circuit alters the amplitude of the AC excitation signal in proportion to a physical characteristic selected from the group consisting of temperature, pressure, brightness, strain, resistivity, and conductivity.

6. The method of claim 1 further comprising the step of correcting the auto-calibrated measurement by a transfer function of the sensor circuit.

7. A system for auto-calibrated measurement using an AC modulated sensor, comprising:
a signal generator wherein the signal generator provides an AC excitation signal;
a synchronous rectifier wherein the synchronous rectifier rectifies the AC excitation signal to generate a calibration signal;
a sensor circuit wherein the sensor circuit generates a measurement signal in response to a measured characteristic and when the AC excitation signal is applied to the sensor circuit;
a summing circuit wherein the measurement signal and the calibration signal are combined into a summed signal;
a computer having an input wherein the summed signal is applied to the input;
a computer readable storage medium having encoded thereon computer readable instructions capable of instructing a computer to:
digitize the summed signal;
calculate an amplitude of the first harmonic of the digitized summed signal;
calculate an amplitude of an additional harmonic of the digitized summed signal wherein the additional harmonic is selected from any of the even harmonics of the summed signal; and
divide the amplitude of the first harmonic by the amplitude of the second harmonic to obtain an auto-calibrated measurement.

8. The system of claim 7 wherein the additional harmonic is the second harmonic of the summed signal.

9. The system of claim 7 wherein the AC excitation signal is rectified by applying the AC excitation signal to a synchronous rectifier.

10. The system of claim 7 wherein the sensor circuit is a bridge-type transducer.

11. The system of claim 7 wherein the sensor circuit alters the amplitude of the AC excitation signal in proportion to a physical characteristic selected from the group consisting of temperature, pressure, brightness, strain, resistivity, and conductivity.

PTO/SB/20PCT-KR (06-10)
Approved for use through 01/31/2012. OMB 0651-0058
U.S. Patent and Trademark Office; U. S. DEPARTMENT OF COMMERCE
Under the Paperwork Reduction Act of 1995, no persons are required to respond to a collection of information unless it displays a valid OMB control number.

REQUEST FOR PARTICIPATION IN THE PATENT COOPERATION TREATY - PATENT PROSECUTION HIGHWAY (PCT-PPH) PILOT PROGRAM BETWEEN THE KOREAN INTELLECTUAL PROPERTY OFFICE (KIPO) AND THE USPTO

Application No:	12/602,884	Filing date:	December 3, 2009
First Named Inventor:	Stephen Besch		
Title of the Invention:	Method And System For Synchronous Rectification		

THIS REQUEST FOR PARTICIPATION IN THE PCT-PPH PILOT PROGRAM ALONG WITH THE REQUIRED DOCUMENTS MUST BE SUBMITTED VIA EFS-WEB. INFORMATION REGARDING EFS-WEB IS AVAILABLE AT HTTP://WWW.USPTO.GOV/EBC/EFS_HELP.HTML

APPLICANT HEREBY REQUESTS PARTICIPATION IN THE PCT-PPH PROGRAM AND PETITIONS TO MAKE THE ABOVE-IDENTIFIED APPLICATION SPECIAL UNDER THE PCT-PPH PROGRAM.

The above-identified application is (1) a national stage entry of the corresponding PCT application, or (2) a national stage entry of another PCT application which claims priority to the corresponding PCT application, or (3) a national application that claims domestic/ foreign priority to the corresponding PCT application, or (4) a national application which forms the basis for the priority claim in the corresponding PCT application, or (5) a continuing application of a U.S. application that satisfies one of (1) to (4) above, or (6) a U.S. application that claims domestic benefit to a U.S. provisional application which forms the basis for the priority claim in the corresponding PCT application.

The corresponding PCT application number(s) is/are: PCT/US2008/065914

The international date of the corresponding PCT application(s) is/are: June 5, 2008

I. List of Required Documents:

a. **A copy of the latest international work product (WO/ISA, WO/IPEA, or IPER) in the above–identified corresponding PCT application(s)**

- [x] Is attached.
- [ ] Is not attached because the document is already in the U.S. application.

b. **A copy of all claims which were indicated as having novelty, inventive step and industrial applicability in the above-identified corresponding PCT application(s).**

- [x] Is attached.
- [ ] Is not attached because the document is already in the U.S. application.

c. **English translations of the documents in a. and b. above are attached (if the documents are not in the English language). A statement that the English translation is accurate is attached for the document in b. above.**

This collection of information is required by 35 U.S.C. 119, 37 CFR 1.55, and 37 CFR 1.102(d). The information is required to obtain or retain a benefit by the public, which is to file (and by the USPTO to process) an application. Confidentiality is governed by 35 U.S.C. 122 and 37 CFR 1.11 and 1.14. This collection is estimated to take 2 hours to complete, including gathering, preparing, and submitting the completed application form to the USPTO. Time will vary depending upon the individual case. Any comments on the amount of time you require to complete this form and/or suggestions for reducing this burden should be sent to the Chief Information Officer, U.S. Patent and Trademark Office, U.S. Department of Commerce, P.O. Box 1450, Alexandria, VA 22313-1450. DO NOT SEND FEES OR COMPLETED FORMS TO THIS ADDRESS.

Approved for use through 01/31/2012. OMB 0651-0058
U.S.Patent and Trademark Office; U.S. DEPARTMENT OF COMMERCE
Under the Paperwork Reduction Act of 1995, no persons are required to respond to a collection of information unless it displays a valid OMB control number.

REQUEST FOR PARTICIPATION IN THE PCT-PPH PILOT PROGRAM BETWEEN THE KIPO AND THE USPTO

(continued)

Application No.:	12/602,884
First Named Inventor:	Stephen Besch

d. **(1) An information disclosure statement listing the documents cited in the international work products (ISR, WO/ISA, WO/IPEA, IPER) of the corresponding PCT application.**

☐ Is attached

☒ Has already been filed in the above-identified U.S. application on March 26, 2010

(2) Copies of all documents (except) for U.S. patents or U.S. patent application publications)

☒ Are attached.

Have already been filed in the above-identified U.S. application on March 26, 2010

II. Claims Correspondence Table:

Claims in US Application	Patentable Claims in the corresponding PCT Application	Explanation regarding the correspondence
1	1	Claim is identical
2	2	Claim is identical
3	3	Claim is identical
4	4	Claim is identical
5	5	Claim is identical
6	6	Claim is identical
7	7	Claim is identical
8	8	Claim is identical
9	9	Claim is identical
10	10	Claim is identical
11	11	Claim is identical

III. All the claims in the US application sufficiently correspond to the patentable claims in the corresponding PCT application.

Signature	/Alfonzo I. Cutaia #60,070/	Date	August 1, 2010
Name (Print/Typed)	Alfonzo I. Cutaia	Registration Number	60070

Privacy Act Statement

The **Privacy Act of 1974 (P.L. 93-579)** requires that you be given certain information in connection with your submission of the attached form related to a patent application or patent. Accordingly, pursuant to the requirements of the Act, please be advised that: (1) the general authority for the collection of this information is 35 U.S.C. 2(b)(2); (2) furnishing of the information solicited is voluntary; and (3) the principal purpose for which the information is used by the U.S. Patent and Trademark Office is to process and/or examine your submission related to a patent application or patent. If you do not furnish the requested information, the U.S. Patent and Trademark Office may not be able to process and/or examine your submission, which may result in termination of proceedings or abandonment of the application or expiration of the patent.

The information provided by you in this form will be subject to the following routine uses:

1. The information on this form will be treated confidentially to the extent allowed under the Freedom of Information Act (5 U.S.C. 552) and the Privacy Act (5 U.S.C 552a). Records from this system of records may be disclosed to the Department of Justice to determine whether disclosure of these records is required by the Freedom of Information Act.
2. A record from this system of records may be disclosed, as a routine use, in the course of presenting evidence to a court, magistrate, or administrative tribunal, including disclosures to opposing counsel in the course of settlement negotiations.
3. A record in this system of records may be disclosed, as a routine use, to a Member of Congress submitting a request involving an individual, to whom the record pertains, when the individual has requested assistance from the Member with respect to the subject matter of the record.
4. A record in this system of records may be disclosed, as a routine use, to a contractor of the Agency having need for the information in order to perform a contract. Recipients of information shall be required to comply with the requirements of the Privacy Act of 1974, as amended, pursuant to 5 U.S.C. 552a(m).
5. A record related to an International Application filed under the Patent Cooperation Treaty in this system of records may be disclosed, as a routine use, to the International Bureau of the World Intellectual Property Organization, pursuant to the Patent Cooperation Treaty.
6. A record in this system of records may be disclosed, as a routine use, to another federal agency for purposes of National Security review (35 U.S.C. 181) and for review pursuant to the Atomic Energy Act (42 U.S.C. 218(c)).
7. A record from this system of records may be disclosed, as a routine use, to the Administrator, General Services, or his/her designee, during an inspection of records conducted by GSA as part of that agency's responsibility to recommend improvements in records management practices and programs, under authority of 44 U.S.C. 2904 and 2906. Such disclosure shall be made in accordance with the GSA regulations governing inspection of records for this purpose, and any other relevant (*i.e.*, GSA or Commerce) directive. Such disclosure shall not be used to make determinations about individuals.
8. A record from this system of records may be disclosed, as a routine use, to the public after either publication of the application pursuant to 35 U.S.C. 122(b) or issuance of a patent pursuant to 35 U.S.C. 151. Further, a record may be disclosed, subject to the limitations of 37 CFR 1.14, as a routine use, to the public if the record was filed in an application which became abandoned or in which the proceedings were terminated and which application is referenced by either a published application, an application open to public inspection or an issued patent.
9. A record from this system of records may be disclosed, as a routine use, to a Federal, State, or local law enforcement agency, if the USPTO becomes aware of a violation or potential violation of law or regulation.

PATENT COOPERATION TREATY

PCT

INTERNATIONAL PRELIMINARY REPORT ON PATENTABILITY

(Chapter I of the Patent Cooperation Treaty)

(PCT Rule 44*bis*)

Applicant's or agent's file reference 011520.00704	**FOR FURTHER ACTION**	See item 4 below
International application No. PCT/US2008/065914	International filing date *(day/month/year)* 05 June 2008 (05.06.2008)	Priority date *(day/month/year)* 05 June 2007 (05.06.2007)
International Patent Classification (8th edition unless older edition indicated) See relevant information in Form PCT/ISA/237		
Applicant THE RESEARCH FOUNDATION OF STATE UNIVERSITY OF NEW YORK		

1. This international preliminary report on patentability (Chapter I) is issued by the International Bureau on behalf of the International Searching Authority under Rule 44 *bis*.1(a).

2. This REPORT consists of a total of 5 sheets, including this cover sheet.

   In the attached sheets, any reference to the written opinion of the International Searching Authority should be read as a reference to the international preliminary report on patentability (Chapter I) instead.

3. This report contains indications relating to the following items:

   - [x] Box No. I — Basis of the report
   - [ ] Box No. II — Priority
   - [ ] Box No. III — Non-establishment of opinion with regard to novelty, inventive step and industrial applicability
   - [ ] Box No. IV — Lack of unity of invention
   - [x] Box No. V — Reasoned statement under Article 35(2) with regard to novelty, inventive step or industrial applicability; citations and explanations supporting such statement
   - [ ] Box No. VI — Certain documents cited
   - [ ] Box No. VII — Certain defects in the international application
   - [ ] Box No. VIII — Certain observations on the international application

4. The International Bureau will communicate this report to designated Offices in accordance with Rules 44*bis*.3(c) and 93*bis*.1 but not, except where the applicant makes an express request under Article 23(2), before the expiration of 30 months from the priority date (Rule 44*bis* .2).

	Date of issuance of this report 07 December 2009 (07.12.2009)
The International Bureau of WIPO 34, chemin des Colombettes 1211 Geneva 20, Switzerland Facsimile No. +41 22 338 82 70	Authorized officer Ellen Moyse e-mail: pt02.pct@wipo.int

PATENT COOPERATION TREATY

From the
INTERNATIONAL SEARCHING AUTHORITY

To:
Cutaia, Alfonzo I.

Hodgson Russ LLP The Guaranty Building 140 Pearl Street, Suite 100 Buffalo NY 14202-4040 USA

PCT

WRITTEN OPINION OF THE INTERNATIONAL SEARCHING AUTHORITY

(PCT Rule 43bis.1)

Date of mailing *(day/month/year)*	**04 DECEMBER 2008 (04.12.2008)**
Applicant's or agent's file reference 011520.00704	**FOR FURTHER ACTION** See paragraph 2 below

International application No.	International filing date *(day/month/year)*	Priority date *(day/month/year)*
PCT/US2008/065914	**05 JUNE 2008 (05.06.2008)**	05 JUNE 2007 (05.06.2007)

International Patent Classification (IPC) or both national classification and IPC

H02M 3/155(2006.01)i

Applicant

The Research Foundation of State University of New York et al

1. This opinion contains indications relating to the following items:

- [x] Box No. I Basis of the opinion
- [ ] Box No. II Priority
- [ ] Box No. III Non-establishment of opinion with regard to novelty, inventive step and industrial applicability
- [ ] Box No. IV Lack of unity of invention
- [x] Box No. V Reasoned statement under Rule 43bis.1(a)(i) with regard to novelty, inventive step or industrial applicability; citations and explanations supporting such statement
- [ ] Box No. VI Certain documents cited
- [ ] Box No. VII Certain defects in the international application
- [ ] Box No. VIII Certain observations on the international application

2. **FURTHER ACTION**
If a demand for international preliminary examination is made, this opinion will be considered to be a written opinion of the International Preliminary Examining Authority ("IPEA") except that this does not apply where the applicant chooses an Authority other than this one to be the IPEA and the chosen IPEA has notified the International Bureau under Rule 66.1bis(b) that written opinions of this International Searching Authority will not be so considered.

If this opinion is, as provided above, considered to be a written opinion of the IPEA, the applicant is invited to submit to the IPEA a written reply together, where appropriate, with amendments, before the expiration of 3 months from the date of mailing of Form PCT/ISA/220 or before the expiration of 22 months from the priority date, whichever expires later.
For further options, see Form PCT/ISA/220.

3. For further details, see notes to Form PCT/ISA/220.

Name and mailing address of the ISA/KR	Date of completion of this opinion	Authorized officer
Korean Intellectual Property Office Government Complex-Daejeon, 139 Seonsa-ro, Seo-gu, Daejeon 302-701, Republic of Korea Facsimile No. 82-42-472-7140	04 DECEMBER 2008 (04.12.2008)	BAE, Jin Yong Telephone No.82-42-481-8503

WRITTEN OPINION OF THE INTERNATIONAL SEARCHING AUTHORITY

International application No.
PCT/US2008/065914

Box No. I Basis of this opinion

1. With regard to the **language**, this opinion has been established on the basis of :

   ☒ the international application in the language in which it was filed

   ☐ a translation of the international application into _____ , which is the language of a translation furnished for the purposes of international search (Rules 12.3(a) and 23.1(b))

2. ☐ This opinion has been established taking into account the **rectification of an obvious mistake** authorized by or notified to this Authority under Rule 91 (Rule 43*bis*.1(a))

3. With regard to any **nucleotide and/or amino acid sequence** disclosed in the international application, this opinion has been established on the basis of:

   a. type of material
   - ☐ a sequence listing
   - ☐ table(s) related to the sequence listing

   b. format of material
   - ☐ on paper
   - ☐ in electronic form

   c. time of filing/furnishing
   - ☐ contained in the international application as filed.
   - ☐ filed together with the international application in electronic form.
   - ☐ furnished subsequently to this Authority for the purposes of search.

4. ☐ In addition, in the case that more than one version or copy of a sequence listing and/or table relating thereto has been filed or furnished, the required statements that the information in the subsequent or additioanl copies is identical to that in the application as filed or does not go beyond the application as filed, as appropriate, were furnished.

5. Additional comments:

WRITTEN OPINION OF THE INTERNATIONAL SEARCHING AUTHORITY

International application No.
PCT/US2008/065914

Box No. V Reasoned statement under Rule 43bis.1(a)(i) with regard to novelty, inventive step or industrial applicability; citations and explanations supporting such statement

1. Statement

Novelty (N)	Claims	1-11	YES
	Claims	NONE	NO
Inventive step (IS)	Claims	1-11	YES
	Claims	NONE	NO
Industrial applicability (IA)	Claims	1-11	YES
	Claims	NONE	NO

2. Citations and explanations :

The following document has been considered for the purpose of this opinion.

D1 : US 5844193 A (Kabushiki Kaisha Toshiba Corp)

The present invention relates to the method and system of synchronous rectification and frequency domain analysis to remove the need for calibration of the A/D and D/A components. It is applicable to any sensor based measurement in which the sensor can be excited with an AC voltage or current, and in which the signal can be modulated with an AC voltage or current.

D1 discloses a control equipment for a resistance welding machine for welding material by the Joule heat generated in the material by applying an electric power to the material, including an inverter for converting a DC voltage to an AC voltage by pulse width modulation control.

(1) Novelty and Inventive Step

1) Claims 1, 7

The subject-matter of claims 1, 7 is about a system for auto-calibrated measurement using an AC modulated sensor comprising : a signal generator wherein the signal generator provides an AC excitation signal ; a synchronous rectifier wherein the synchronous rectifies the AC excitation signal to generate a calibration signal ; a sensor circuit wherein the measurement signal and the calibration signal are combined into a summed signal ; a computed having an input wherein the summed signal is applied to the input ; and a computer readable storage medium having encoded thereon computer readable instructions capable of instructing a computer which digitizes the summed signal, calculates an amplitude of an additional harmonic of the digitized summed signal, calculates an amplitude of an additional harmonic of the digitized summed signal wherein the additional harmonic is selected from any of even harmonics of the summed signal, and divides the amplitude of the first harmonic by the amplitude of the second harmonic to obtain an auto-calibrated measurement.

None of the cited documents do not teach nor fairly suggest the system for auto-calibrated measurement using an AC modulated sensor. Therefore, the subject matter of claims 1, 7 is considered to be novel and to involve an inventive step under PCT Article 33(2)-(3).

2) Claims 2-6, 8-11

Claims 2-6, 8-11 are dependent on claims 1, 7. Consequently, the subject matter of claims 2-6, 8-11 is also considered to be novel and to involve an inventive step under PCT Article 33(2)-(3).

- continued -

Supplemental Box

In case **the space in any of the preceding boxes is not sufficient.**
Continuation of :

Box No. V

(2) Industrial Applicability

There is no reason for forming a negative opinion about the industrial applicability of this invention. Consequently, claims 1-11 appear to meet the requirement of PCT Article 33(4).

- End of Box No. V -

UNITED STATES PATENT AND TRADEMARK OFFICE

UNITED STATES DEPARTMENT OF COMMERCE
United States Patent and Trademark Office
Address: COMMISSIONER FOR PATENTS
P.O. Box 1450
Alexandria, Virginia 22313-1450
www.uspto.gov

APPLICATION NO.	FILING DATE	FIRST NAMED INVENTOR	ATTORNEY DOCKET NO.	CONFIRMATION NO.
12/602,884	04/13/2010	Stephen Besch	011520.00785	9483

26712 7590 08/10/2010
HODGSON RUSS LLP
THE GUARANTY BUILDING
140 PEARL STREET
SUITE 100
BUFFALO, NY 14202-4040

EXAMINER

ART UNIT	PAPER NUMBER
2831	

MAIL DATE	DELIVERY MODE
08/10/2010	PAPER

Please find below and/or attached an Office communication concerning this application or proceeding.

The time period for reply, if any, is set in the attached communication.

UNITED STATES PATENT AND TRADEMARK OFFICE

Commissioner for Patents
United States Patent and Trademark Office
P.O. Box 1450
Alexandria, VA 22313-1450
www.uspto.gov

HODGSON RUSS LLP
THE GUARANTY BUILDING
140 PEARL STREET
SUITE 100
BUFFALO NY 14202-4040

In re Application of	**: DECISION ON REQUEST TO**
BESCH et al.	**: PARTICIPATE IN THE PATENT**
Application No.: 12/602,884	**: PROSECUTION HIGHWAY**
Filed: 13 April 2010	**: PROGRAM AND PETITION**
Attorney Docket No.: 011520.00785	**: TO MAKE SPECIAL UNDER**
For: METHOD AND SYSTEM FOR	**: 37 CFR 1.102(d)**
SYNCHRONOUS RECTIFICATION	

This is a decision on the request to participate in the Patent Prosecution Highway (PPH) program and the petition under 37 CFR 1.102(d), filed 01 August 2010, to make the above-identified application special.

The request and petition are **GRANTED**.

Discussion

A grantable request to participate in the PPH program and petition to make special require:

1. The U.S. application is

    a. a Paris Convention application which either
        i. validly claims priority under 35 U.S.C. 119(a) and 37 CFR 1.55 to one or more applications filed in the KIPO, or
        ii. validly claims priority under 35 U.S.C. 119(a)/365(a) to a PCT application that contains no priority claims,

    or

    b. a national stage application under the PCT (an application which entered the national stage in the U.S. from a PCT international application after compliance with 35 U.S.C. 371), which PCT application
        i. validly claims priority under 35 U.S.C. 365(b) to an application filed in the KIPO, or
        ii. validly claims priority under 35 U.S.C. 365(b) to a PCT application that contains no priority claims, or
        iii. contains no priority claim,

    or

    c. a so-called bypass application filed under 35 U.S.C. 111(a) which validly claims benefit under 35 U.S.C. 120 to a PCT application, which PCT application

i. validly claims priority under 35 U.S.C. 365(b) to an application filed in the KIPO, or
ii. validly claims priority under 35 U.S.C. 365(b) to a PCT application that contains no priority claims, or
iii. contains no priority claim;

2. Applicant must submit a copy of:
   a. The allowable/patentable claim(s) from the KR application(s);
   b. An English translation of the allowable/patentable claim(s), and
   c. A statement that the English translation is accurate (if the claims were published in a language other than English);
3. Applicant must:
   a. Ensure that all the claims in the U.S. application must sufficiently correspond or be amended to sufficiently correspond to the allowable/patentable claim(s) in the KR application(s), and
   b. Submit a claims correspondence table in English;
4. Examination of the U.S. application has not begun;
5. Applicant must submit:
   a. A copy of all the office actions (which are relevant to patentability), excluding "Decision to Grant a Patent" from each of the KR application(s) containing the allowable/patentable claim(s);
   b. An English language translation of the KIPO office action; and
   c. A statement that the English translation is accurate (if the office actions are not in the English language);
6. Applicant must submit:
   a. An IDS listing the documents cited by the KIPO examiner in the KIPO office action (unless already filed in this application); and
   b. Copies of all the documents cited in the KIPO office action, except U.S. patents or U.S. patent application publications (unless already filed in this application);

The request to participate in the PPH program and petition comply with the above requirements. Accordingly, the above-identified application has been accorded "special" status.

Any response must be submitted via EFS-Web.

Telephone inquiries concerning this decision should be directed to Lee W. Young at 571-272-4549.

All other inquiries concerning the examination or status of the application is accessible in the PAIR system at http://uspto.gov/ebc/index.html.

Lee W. Young
TQAS
Technology Center 2800

UNITED STATES PATENT AND TRADEMARK OFFICE

Commissioner for Patents
United States Patent and Trademark Office
P.O. Box 1450
Alexandria, VA 22313-1450
www.uspto.gov

Fulbright & Jaworski L.L.P.
Attn: MN IP Docket
600 Congress Avenue
Suite 2400
Austin TX 78701

MAILED

JUL 26 2011

PCT LEGAL ADMINISTRATION

In re Application of GORE et al.
Application No.: 12/602,922
PCT No.: PCT/GB2008/050409
Int. Filing Date: 04 June 2008
Priority Date: 04 June 2007
Attorney Docket No.: VESH-029/PUS
For: NOVEL PROCESS

DECISION ON
REQUEST FOR REFUND

This decision is issued in response to the "Second Request For Refund" filed 13 May 2011. No petition fee is required.

BACKGROUND

On 04 June 2008, applicants filed international application PCT/GB2008/050409. On 10 January 2008, a copy of the international application was communicated to the United States Patent and Trademark Office (USPTO) by the International Bureau (IB). The deadline for submission of the basic national fee was thirty months from the priority date, i.e., 04 December 2009. The international application included 41 numbered claims.

On 03 December 2009, applicants filed a Transmittal Letter for entry into the national stage in the United States accompanied by, among other materials, payment of the basic national fee, a copy of the international application (communicated by the International Bureau), and an application data sheet. The Transmittal Letter authorized a charge to Deposit Account No. 05-1212 for any additional fees required.

On 01 June 2010, applicants filed an executed declaration and the surcharge for filing the declaration later than thirty months after the priority date. Additionally, applicants submitted the following fees: $390 as the fee for inclusion of a multiple dependent claim, $660 as the fee for inclusion of independent claims in excess of three, and $1,404 as the fee for total claims in excess of twenty.

On 13 May 2011, applicants filed the (second) "Request For Refund" considered herein, accompanied by, among other materials, a Preliminary Amendment directed to the 41 claims of record and specifically reducing such claims to the 16 total claims. The petition requests a refund of the additional fees paid. (The preliminary amendment was submitted on 10 May 2011.)

Application No.: 12/602,922

DISCUSSION

It is noted that the present request for refund was accompanied by a Preliminary Amendment specifically directed to the original 41 claims. However, applicants are not entitled to a refund of fees based thereon. See MPEP § 1893.01(c) (emphasis added):

> A preliminary amendment accompanying the initial national stage submission under 35 U.S.C. 371 that cancels claims and/or eliminates multiple dependent claims will be effective to reduce the number of claims to be considered in calculating extra claim fees required under 37 CFR 1.492(d)-(e) and/or eliminate the multiple dependent claim fee required under 37 CFR 1.492(f). **A subsequently filed amendment canceling claims and/or eliminating multiple dependent claims will not entitle applicant to a refund of fees previously paid.**

Based on the above, the fees due in this national stage application are properly calculated based on the 24 pages (containing 41 claims) included in the international application. A review of the fees charged herein confirms that the $390 multiple dependent claim fee, $660 independent claims fee, and $1,404 total claims fee were properly calculated. The request for a refund of these fees is therefore appropriately dismissed.

CONCLUSION

The "Request For Refund" filed 13 May 2011 is DISMISSED without prejudice.

Any request for reconsideration on the merits of this decision must be filed within TWO (2) MONTHS from the mailing date of this decision, indicated above. Any such request should include a cover sheet entitled "Renewed Refund Request" and must include a proper showing that the claims herein were effectively amended by applicants prior to the USPTO's charging of the required fees.

Any further correspondence with respect to this matter may be filed electronically via EFS-Web selecting the document description "Petition for review and processing by the PCT Legal Office" or by mail addressed to Mail Stop PCT, Commissioner for Patents, Office of PCT Legal Administration, P.O. Box 1450, Alexandria, Virginia 22313-1450, with the contents of the letter marked to the attention of the Office of PCT Legal Administration.

Anthony Smith
Attorney-Advisor
Office of PCT Legal Administration
Tel: (571) 272-3298

UNITED STATES PATENT AND TRADEMARK OFFICE

UNITED STATES DEPARTMENT OF COMMERCE
United States Patent and Trademark Office
Address: COMMISSIONER FOR PATENTS
P.O. Box 1450
Alexandria, Virginia 22313-1450
www.uspto.gov

APPLICATION NO.	FILING DATE	FIRST NAMED INVENTOR	ATTORNEY DOCKET NO.	CONFIRMATION NO.
12/602,971	12/03/2009	Hiroaki Ishikawa	960/230	1072

23838 7590 10/21/2011
KENYON & KENYON LLP
1500 K STREET N.W.
SUITE 700
WASHINGTON, DC 20005

EXAMINER
HEWITT, JAMES M

ART UNIT	PAPER NUMBER
3679	

MAIL DATE	DELIVERY MODE
10/21/2011	PAPER

Please find below and/or attached an Office communication concerning this application or proceeding.

The time period for reply, if any, is set in the attached communication.

UNITED STATES PATENT AND TRADEMARK OFFICE

Commissioner for Patents
United States Patent and Trademark Office
P.O. Box 1450
Alexandria, VA 22313-1450
www.uspto.gov

OCT 21 2011

KENYON & KENYON LLP
1500 K STREET N.W.
SUITE 700
WASHINGTON DC 20005

In re application of	:	**DECISION ON REQUEST TO**
Ishikawa et al.	:	**PARTICIPATE IN PATENT**
Application No. 12/602,971	:	**PROSECUTION HIGHWAY**
Filed: December 3, 2009	:	**PROGRAM AND PETITION**
For: WATERPROOF CONNECTING	:	**TO MAKE SPECIAL UNDER**
STRUCTURE FOR PIPE	:	**37 CFR 1.102(a)**

This is a decision on the request to participate in the Patent Prosecution Highway (PPH) program and the petition under 37 CFR 1.102(a), filed August 3, 2011 to make the above-identified application special.

The request and petition are **GRANTED**.

A grantable request to participate in the PPH program and petition to make special require:

(1) The U.S. application must validly claim priority under 35 U.S.C. 119(a) to one or more applications filed in the JPO;
(2) Applicant must submit a copy of the allowable/patentable claim(s) from the JPO application(s) along with an English translation thereof and a statement that the English translation is accurate;
(3) All the claims in the U.S. application must sufficiently correspond or be amended to sufficiently correspond to the allowable/patentable claim(s) in the JPO application(s);
(4) Examination of the U.S. application has not begun;
(5) Applicant must submit a copy of the latest Office action from each of the JPO application(s) containing the allowable/patentable claim(s) along with an English translation thereof and a statement that the English translation is accurate;
(6) Applicant must submit an IDS listing the documents cited by the JPO examiner in the JPO Office action along with copies of documents except U.S. patents or U.S. patent application publications.

The request to participate in the PPH pilot program complies with the above requirements. Therefore, the above-identified application has been accorded "special" status.

All other inquiries concerning the examination or status of the application should be directed to the Patent Application Information Retrieval (PAIR) system.

The application is being forwarded to the examiner for action on the merits commensurate with this decision.

Any inquiry regarding this decision should be directed to Mikado Buiz, Quality Assurance Specialist, at (571) 272-6578.

/ Mikado Buiz /

Mikado Buiz,
Quality Assurance Specialist
Technology Center 3600

MB/MB: 10/20/11

2 - SEP 2010

UNITED STATES PATENT AND TRADEMARK OFFICE

Commissioner for Patents
United States Patent and Trademark Office
P.O. Box 1450
Alexandria, VA 22313-1450
www.uspto.gov

LIFE TECHNOLOGIES CORPORATION
C/O INTELLEVATE
P.O. BOX 52050
MINNEAPOLIS MN 55402

In re Application of	:
GEE et al.	:
Application No.: 12/602,973	: DECISION ON RESPONSE
PCT No.: PCT/US08/65986	:
Int. Filing: 05 June 2008	:
Priority Date: 05 June 2007	:
Attorney Docket No.: IVGN 958 US	:
For: LONG WAVELENGTH FLUOROGENIC	:
INTERCELLULAR ION INDICATORS	:

This application is before the PCT Legal Office for consideration of applicant's request to correct the inventor's name filed on 09 March 2010 in the United States Patent and Trademark Office (USPTO) in the above-captioned application,.

On 03 December 2009, applicant filed a request for U.S. national stage entry for PCT/US08/65986 along with the basic national fee and an executed declaration. On 25 March 2010, a Notification of Missing Requirements was mailed indicating that the declaration indicated the inventor's name VLADIMIR MARTIN, which is different than that which is printed on the international application (VLADMIR MARTIN).

On 14 July 2010, applicant filed a response to the Notification along with a request for a two month extension of time, which is granted. Applicant states that the International Bureau published a corrected version of the international application with the correct spelling of the inventor's name. Applicant indicates that the correct inventor's name is VLADIMIR MARTIN, explaining the error in the inventor's name is typographical.

Applicants' explanation of the difference in inventor's name is accepted and noted for the record. The Request to correct the typographical error in inventor's name is **GRANTED**. No petition fee is required. The declaration is in compliance with 37 CFR 1.497(a) and (b) and is acceptable.

The application will be forwarded to the United States Designated/Elected Office for further processing. The 35 U.S.C. 371(c)(1), (c)(2) and (c)(4) date is 03 December 2009.

/Cynthia M. Kratz/
Cynthia M. Kratz
Attorney Advisor
PCT Legal Office
Telephone: (571) 272-3286

UNITED STATES PATENT AND TRADEMARK OFFICE

Commissioner for Patents
United States Patent and Trademark Office
P.O. Box 1450
Alexandria, VA 22313-1450
www.uspto.gov

WONG, CABELLO, LUTSCH, RUTHERFORD & BRUCCULERI, L.L.P.
20333 SH 249 6TH FLOOR
HOUSTON, TX 77070

MAILED

JUN 17 2011

OFFICE OF PETITIONS

In re Application of :
David Allen Solin :
Application No. 12/603,026 : DECISION ON PETITION
Filed: October 21, 2009 TO WITHDRAW FROM RECORD
Attorney Docket No. 0081-169001 :
:

This is a decision on the Request to Withdraw as attorney or agent of record under 37 C.F.R. § 1.36(b), filed May 17, 2011.

The request is **NOT APPROVED** because it is moot.

A review of the file record indicates that on June 15, 2011 the power of attorney to Wong, Cabello, Lutsch, Rutherford & Brucculeri L.L.P. was revoked by the assignee of the patent application. Accordingly, the request to withdraw under 37 C.F.R. § 1.36(b) is moot.

All future communications from the Office will be directed to the below-listed address until otherwise notified by applicant.

Telephone inquires concerning this decision should be directed to the undersigned at 571-272- 7751. All other inquires concerning either the examination or status of the application should be directed to the Technology Center.

/Joan Olszewski/
Joan Olszewski
Petitions Examiner
Office of Petitions

cc: Brake Hughes Bellermann LLP
c/o CPA Global
P.O. Box 52050
Minneapolis MN 55402

UNITED STATES PATENT AND TRADEMARK OFFICE

UNITED STATES DEPARTMENT OF COMMERCE
United States Patent and Trademark Office
Address: COMMISSIONER FOR PATENTS
P.O. Box 1450
Alexandria, Virginia 22313-1450
www.uspto.gov

APPLICATION NO.	FILING DATE	FIRST NAMED INVENTOR	ATTORNEY DOCKET NO.	CONFIRMATION NO.
12/603,079	10/21/2009	Sining Wei	11005.0370-00000	5882

7590 09/07/2010
Huawei Technologies Co., Ltd./Finnegan
901 New York Avenue
NW
Washington, DC 20001

EXAMINER
KARDOS, NEIL R

ART UNIT	PAPER NUMBER
3623	

MAIL DATE	DELIVERY MODE
09/07/2010	PAPER

DECISION GRANTING PETITION UNDER 37 CFR 1.138(d)

The declaration of express abandonment is recognized

This is in response to the petition under 37 CFR 1.138(d), requesting for a refund of any previously paid search fee and excess claims fee in the above-identified application.

The petition is granted.

The express abandonment is recognized. Any previously paid search fee and excess claims fee are hereby refunded.

Telephone inquiries should be directed to the Office of Data Management at (571) 272-4200.

Patent Publication Branch
Office of Data Management

FORM PET651G (Rev. 08/07)

UNITED STATES PATENT AND TRADEMARK OFFICE

Commissioner for Patents
United States Patent and Trademark Office
P.O. Box 1450
Alexandria, VA 22313-1450
www.uspto.gov

ALSTON & BIRD LLP
BANK OF AMERICA PLAZA
101 SOUTH TRYON STREET, SUITE 4000
CHARLOTTE, NC 28280-4000

MAILED

MAR 28 2011

OFFICE OF PETITIONS

In re Application of	:	
RAVULA, Dheeraj	:	
Application No. 12/603,090	:	DECISION ON PETITION
Filed: October 21, 2009	:	TO WITHDRAW
Attorney Docket No. **P29603-US1**	:	FROM RECORD
	:	

This is a decision on the Request to Withdraw as attorney or agent of record under 37 C.F.R. § 1.36(b), filed February 03, 2011.

The request is **NOT APPROVED** as moot.

A review of the file record indicates that the power of attorney to Alston & Bird LLP has been revoked by the assignee of the patent application on February 14, 2011. Accordingly, the request to withdraw under 37 C.F.R. § 1.36(b) is moot.

All future communications from the Office will continue to be directed to the below-listed address until otherwise notified by applicant.

Telephone inquires concerning this decision should be directed to the undersigned at 571-272- 4231.

Michelle R. Eason
Paralegal Specialist
Office of Petitions

cc: **ERICSSON INC.**
6300 LEGACY DRIVE
M/S EVR 1-C-11
PLANO TX 75024

PTO/SB/20PCT-EP (05-10)
Approved for use through 01/31/2012. OMB 0651-0058
U.S. Patent and Trademark Office; U. S. DEPARTMENT OF COMMERCE
Under the Paperwork Reduction Act of 1995, no persons are required to respond to a collection of information unless it displays a valid OMB control number.

REQUEST FOR PARTICIPATION IN THE PATENT COOPERATION TREATY - PATENT PROSECUTION HIGHWAY (PCT-PPH) PILOT PROGRAM BETWEEN THE EUROPEAN PATENT OFFICE (EPO) AND THE USPTO

Application No:	12/603,232	Filing date:	21 October 2009
First Named Inventor:	Brad A. Niese		
Title of the Invention:	MENISCAL REPAIR SYSTEMS AND METHODS		

THIS REQUEST FOR PARTICIPATION IN THE PCT-PPH PILOT PROGRAM ALONG WITH THE REQUIRED DOCUMENTS MUST BE SUBMITTED VIA EFS-WEB. INFORMATION REGARDING EFS-WEB IS AVAILABLE AT HTTP://WWW.USPTO.GOV/EBC/EFS_HELP.HTML

APPLICANT HEREBY REQUESTS PARTICIPATION IN THE PCT-PPH PROGRAM AND PETITIONS TO MAKE THE ABOVE-IDENTIFIED APPLICATION SPECIAL UNDER THE PCT-PPH PROGRAM.

The above-identified application is (1) a national stage entry of the corresponding PCT application, or (2) a national stage entry of another PCT application which claims priority to the corresponding PCT application, or (3) a national application that claims domestic/ foreign priority to the corresponding PCT application, or (4) a national application which forms the basis for the priority claim in the corresponding PCT application, or (5) a continuing application of a U.S. application that satisfies one of (1) to (4) above, or (6) a U.S. application that claims domestic benefit to a U.S. provisional application which forms the basis for the priority claim in the corresponding PCT application.

The corresponding PCT application number(s) is/are: PCT/US2009/061546

The international filing date of the corresponding PCT application(s) is/are: 21 October 2009

I. List of Required Documents:

a. **A copy of the latest international work product (WO/ISA, WO/IPEA, or IPER) in the above–identified corresponding PCT application(s)**

- [x] Is attached
- [ ] Is not attached because the document is already in the U.S. application.

b. **A copy of all claims which were indicated as having novelty, inventive step and industrial applicability in the above-identified corresponding PCT application(s).**

- [x] Is attached.
- [ ] Is not attached because the document is already in the U.S. application.

c. **English translations of the documents in a. and b. above are attached (if the documents are not in the English language). A statement that the English translation is accurate is attached for the document in b. above.**

This collection of information is required by 35 U.S.C. 119, 37 CFR 1.55, and 37 CFR 1.102(d). The information is required to obtain or retain a benefit by the public, which is to file (and by the USPTO to process) an application. Confidentiality is governed by 35 U.S.C. 122 and 37 CFR 1.11 and 1.14. This collection is estimated to take 2 hours to complete, including gathering, preparing, and submitting the completed application form to the USPTO. Time will vary depending upon the individual case. Any comments on the amount of time you require to complete this form and/or suggestions for reducing this burden should be sent to the Chief Information Officer, U.S. Patent and Trademark Office, U.S. Department of Commerce, P.O. Box 1450, Alexandria, VA 22313-1450. DO NOT SEND FEES OR COMPLETED FORMS TO THIS ADDRESS.

Approved for use through 01/31/2012. OMB 0651-0058
U.S.Patent and Trademark Office; U.S. DEPARTMENT OF COMMERCE

Under the Paperwork Reduction Act of 1995, no persons are required to respond to a collection of information unless it displays a valid OMB control number.

REQUEST FOR PARTICIPATION IN THE PCT-PPH PILOT PROGRAM BETWEEN THE EPO AND THE USPTO

(continued)

Application No.:	12/603,232
First Named Inventor:	Brad A. Niese

d. **(1) An information disclosure statement listing the documents cited in the international work products (ISR, WO/ISA, WO/IPEA, IPER) of the corresponding PCT application.**

- [x] Is attached
- [x] Has already been filed in the above-identified U.S. application on 11/4/2009; 4/6/2010

(2) Copies of all documents (except) for U.S. patents or U.S. patent application publications)

- [ ] Are attached.
- [x] Have already been filed in the above-identified U.S. application on 4/6/2010

II. Claims Correspondence Table:

Claims in US Application	Patentable Claims in the corresponding PCT Application	Explanation regarding the correspondence
1	1	identical
2	2	identical
3	3	identical
4	4	identical
5	5	identical
6	6	identical
7	7	identical
8	8	identical
9	9	identical
10	10	identical
11	11	identical
12	12	identical
13	13	identical
14	14	identical
15	15	identical

III. All the claims in the US application sufficiently correspond to the patentable claims in the corresponding PCT application.

Signature /DES/	Date 10/14/2011
Name (Print/Typed) Donald E. Stout	Registration Number 34493

Privacy Act Statement

The **Privacy Act of 1974 (P.L. 93-579)** requires that you be given certain information in connection with your submission of the attached form related to a patent application or patent. Accordingly, pursuant to the requirements of the Act, please be advised that: (1) the general authority for the collection of this information is 35 U.S.C. 2(b)(2); (2) furnishing of the information solicited is voluntary; and (3) the principal purpose for which the information is used by the U.S. Patent and Trademark Office is to process and/or examine your submission related to a patent application or patent. If you do not furnish the requested information, the U.S. Patent and Trademark Office may not be able to process and/or examine your submission, which may result in termination of proceedings or abandonment of the application or expiration of the patent.

The information provided by you in this form will be subject to the following routine uses:

1. The information on this form will be treated confidentially to the extent allowed under the Freedom of Information Act (5 U.S.C. 552) and the Privacy Act (5 U.S.C 552a). Records from this system of records may be disclosed to the Department of Justice to determine whether disclosure of these records is required by the Freedom of Information Act.
2. A record from this system of records may be disclosed, as a routine use, in the course of presenting evidence to a court, magistrate, or administrative tribunal, including disclosures to opposing counsel in the course of settlement negotiations.
3. A record in this system of records may be disclosed, as a routine use, to a Member of Congress submitting a request involving an individual, to whom the record pertains, when the individual has requested assistance from the Member with respect to the subject matter of the record.
4. A record in this system of records may be disclosed, as a routine use, to a contractor of the Agency having need for the information in order to perform a contract. Recipients of information shall be required to comply with the requirements of the Privacy Act of 1974, as amended, pursuant to 5 U.S.C. 552a(m).
5. A record related to an International Application filed under the Patent Cooperation Treaty in this system of records may be disclosed, as a routine use, to the International Bureau of the World Intellectual Property Organization, pursuant to the Patent Cooperation Treaty.
6. A record in this system of records may be disclosed, as a routine use, to another federal agency for purposes of National Security review (35 U.S.C. 181) and for review pursuant to the Atomic Energy Act (42 U.S.C. 218(c)).
7. A record from this system of records may be disclosed, as a routine use, to the Administrator, General Services, or his/her designee, during an inspection of records conducted by GSA as part of that agency's responsibility to recommend improvements in records management practices and programs, under authority of 44 U.S.C. 2904 and 2906. Such disclosure shall be made in accordance with the GSA regulations governing inspection of records for this purpose, and any other relevant (*i.e.*, GSA or Commerce) directive. Such disclosure shall not be used to make determinations about individuals.
8. A record from this system of records may be disclosed, as a routine use, to the public after either publication of the application pursuant to 35 U.S.C. 122(b) or issuance of a patent pursuant to 35 U.S.C. 151. Further, a record may be disclosed, subject to the limitations of 37 CFR 1.14, as a routine use, to the public if the record was filed in an application which became abandoned or in which the proceedings were terminated and which application is referenced by either a published application, an application open to public inspection or an issued patent.
9. A record from this system of records may be disclosed, as a routine use, to a Federal, State, or local law enforcement agency, if the USPTO becomes aware of a violation or potential violation of law or regulation.

UNITED STATES PATENT AND TRADEMARK OFFICE

UNITED STATES DEPARTMENT OF COMMERCE
United States Patent and Trademark Office
Address: COMMISSIONER FOR PATENTS
P.O. Box 1450
Alexandria, Virginia 22313-1450
www.uspto.gov

APPLICATION NO.	FILING DATE	FIRST NAMED INVENTOR	ATTORNEY DOCKET NO.	CONFIRMATION NO.
12/603,232	10/21/2009	Brad A. Niese	A-2346	6157

33197 7590 10/24/2011
STOUT, UXA, BUYAN & MULLINS LLP
4 VENTURE, SUITE 300
IRVINE, CA 92618

EXAMINER
MCDERMOTT, CORRINE MARIE

ART UNIT	PAPER NUMBER
3773	

MAIL DATE	DELIVERY MODE
10/24/2011	PAPER

Please find below and/or attached an Office communication concerning this application or proceeding.

The time period for reply, if any, is set in the attached communication.

UNITED STATES PATENT AND TRADEMARK OFFICE

Commissioner for Patents
United States Patent and Trademark Office
P.O. Box 1450
Alexandria, VA 22313-1450
www.uspto.gov

STOUT, UXA, BUYAN & MULLINS LLP
4 VENTURE, SUITE 300
IRVINE CA 92618

In re Application of	:	
NIESE, BRAD A. , et al.	:	DECISION ON REQUEST TO
Application No. 12/603,232	:	PARTICIPATE IN PATENT
Filed: October 21, 2009	:	PCT/PROSECUTION HIGHWAY
Attorney Docket No. **A-2346**	:	PROGRAM AND PETITION
For: MENISCAL REPAIR SYSTEMS AND	:	TO MAKE SPECIAL UNDER
METHOD	:	37 CFR 1.102(a)

This is a decision on the request to participate in the Patent Prosecution Highway (PPH) program and the petition under 37 CFR 1.102(a), filed October 14, 2011 to make the above-identified application special.

The request and petition are granted.

A grantable request to participate in the PPH pilot program and petition to make special require:

(1) The U.S. application must validly claim priority under 35 U.S.C. 119(a) to one or more applications filed in the JPO;
(2) Applicant must submit a copy of the allowable/patentable claim(s) from the JPO/PCT application(s) along with an English translation thereof and a statement that the English translation is accurate;
(3) All the claims in the U.S. application must sufficiently correspond or be amended to sufficiently correspond to the allowable/patentable claim(s) in the JPO application(s);
(4) Examination of the U.S. application has not begun;
(5) Applicant must submit a copy of all the office actions from each of the JPO/PCT application(s) containing the allowable/patentable claim(s) along with an English translation thereof and a statement that the English translation is accurate; and
(6) Applicant must submit an IDS listing the documents cited by the JPO examiner in the JPO office action along with copies of documents except U.S. patents or U.S. patent application publications.
In light of the petition being properly submitted, the request to participate in the PPH program and the petition comply with the above requirements. Accordingly, the above-identified application has been accorded "special" status.

The applicant is encouraged to cite and submit all relevant prior art references, if any, to facilitate examination in this application. Upon completion of pre-examination processing, this application will be forwarded to an examiner for examination.

Telephone inquiries concerning this decision should be directed to Henry C. Yuen at 571-272-4485. All other inquiries concerning the examination or status of the application should be directed to Corrine McDermott, SPE of Art Unit 3773, and 571-272-4754 for Class 606 and also accessible in the PAIR system at http://www.uspto.gov/ebc.index.html.

Petition is **granted**.

/Henry C. Yuen/

Henry C. Yuen, Special Programs Examiner
Technology Center 3700 – Mechanical Engineering,
Manufacturing and Products
571-272-4856

UNITED STATES PATENT AND TRADEMARK OFFICE

UNITED STATES DEPARTMENT OF COMMERCE
United States Patent and Trademark Office
Address: COMMISSIONER FOR PATENTS
P.O. Box 1450
Alexandria, Virginia 22313-1450
www.uspto.gov

APPLICATION NO.	FILING DATE	FIRST NAMED INVENTOR	ATTORNEY DOCKET NO.	CONFIRMATION NO.
12/603,277	10/21/2009	Hirofumi Morita	6639P802	6243

8791 7590 11/16/2010
BLAKELY SOKOLOFF TAYLOR & ZAFMAN LLP
1279 OAKMEAD PARKWAY
SUNNYVALE, CA 94085-4040

EXAMINER
PATEL, ISHWARBHAI B

ART UNIT	PAPER NUMBER
2835	

MAIL DATE	DELIVERY MODE
11/16/2010	PAPER

Please find below and/or attached an Office communication concerning this application or proceeding.

The time period for reply, if any, is set in the attached communication.

UNITED STATES PATENT AND TRADEMARK OFFICE

Commissioner for Patents
United States Patent and Trademark Office
P.O. Box 1450
Alexandria, VA 22313-1450
www.uspto.gov

BLAKELY SOKOLOFF TAYLOR & ZAFMAN LLP
1279 OAKMEAD PARKWAY
SUNNYVALE CA 94085-4040

In re Application of	**: DECISION ON REQUEST TO**
MORITA **et al.**	**: PARTICIPATE IN THE PATENT**
Application No.: 12/603,277	**: PROSECUTION HIGHWAY**
Filed: 21 October 2009	**: PROGRAM AND PETITION**
Attorney Docket No.: 6639P802	**: TO MAKE SPECIAL UNDER**
For: ELECTRONIC APPARATUS	**: 37 CFR 1.102(a)**

This is a decision on the request to participate in the Patent Prosecution Highway (PPH) program and the petition under 37 CFR 1.102(a), filed 06 October 2010, to make the above-identified application special.

The request and petition are **GRANTED**.

Discussion

A grantable request to participate in the PPH pilot program and petition to make special require:

1. The U.S. application is
    a. a Paris Convention application which either
        i. validly claims priority under 35 U.S.C. 119(a) and 37 CFR 1.55 to one or more applications filed in the JPO, or
        ii. validly claims priority to a PCT application that contains no priority claims, or
    b. a national stage application under the PCT (an application which entered the national stage in the U.S. from a PCT international application after compliance with 35 U.S.C. 371), which PCT application
        i. validly claims priority to an application filed in the JPO, or
        ii. validly claims priority to a PCT application that contains no priority claims, or
        iii. contains no priority claim, or
    c. a so-called bypass application filed under 35 U.S.C. 111(a) which validly claims benefit under 35 U.S.C. 120 to a PCT application, which PCT application
        i. validly claims priority to an application filed in the JPO, or
        ii. validly claims priority to a PCT application that contains no priority claims, or
        iii. contains no priority claim;
2. Applicant must submit a copy of:

a. The allowable/patentable claim(s) from the JPO application(s);
b. An English translation of the allowable/patentable claim(s) and
c. A statement that the English translation is accurate;

3. Applicant must:
   a. Ensure all the claims in the U.S. application must sufficiently correspond or be amended to sufficiently correspond to the allowable/patentable claim(s) in the JPO application(s) and
   b. Submit a claims correspondence table in English;
4. Examination of the U.S. application has not begun;
5. Applicant must submit:
   a. Documentation of prior office action:
      i. a copy of the office action(s) just prior to the "Decision to Grant a Patent" from each of the JPO application(s) containing the allowable/patentable claim(s) or
      ii. if the allowable/patentable claims(s) are from a "Notification of Reasons for Refusal" then the Notification of Reasons for Refusal or
      iii. if the JPO application is a first action allowance then no office action from the JPO is necessary should be indicated on the request/petition form;
   b. An English language translation of the JPO Office action from (5)(a)(i)-(ii) above
   c. A statement that the English translation is accurate;
6. Applicant must submit:
   a. An IDS listing the documents cited by the JPO examiner in the JPO office action (unless already submitted in this application)
   b. Copies of the documents except U.S. patents or U.S. patent application publications (unless already submitted in this application);

The request to participate in the PPH pilot program and petition comply with the above requirements. Accordingly, the above-identified application has been accorded "special" status.

Inquiries concerning this decision should be directed to Lee W. Young at 571-272-4549.

All other inquiries concerning the examination or status of the application is accessible in the PAIR system at http://www.uspto.gov/ebc.index.html.

This application will be forwarded to the examiner for action on the merits commensurate with this decision.

Lee W. Young
TQAS
Technology Center 2800

Doc Code: PET.GREEN
Document Description: Petition for Green Tech Pilot

PTO/SB/420 (05-10)
Approved for use through 05/31/2010. OMB 0651-0062
U.S. Patent and Trademark Office; U. S. DEPARTMENT OF COMMERCE
Under the Paperwork Reduction Act of 1995, no persons are required to respond to a collection of information unless it displays a valid OMB control number.

PETITION TO MAKE SPECIAL UNDER THE GREEN TECHNOLOGY PILOT PROGRAM

Attorney Docket Number: 2800/17	Application Number (if known): 12/603,285	Filing date: 10-21-2009

First Named Inventor: Sergey Frolov

Title: THREE-STAGE FORMATION OF THIN-FILMS FOR PHOTOVOLTAIC DEVICES.

APPLICANT HEREBY REQUESTS TO PARTICIPATE IN THE GREEN TECHNOLOGY PILOT PROGRAM FOR THE ABOVE-IDENTIFIED APPLICATION. See Instruction Sheet on page 2.

This petition must be timely filed electronically using the USPTO electronic filing system, EFS-Web.

1. By filing this petition:

   Applicant is requesting early publication: Applicant hereby requests early publication under 37 CFR 1.219 and the publication fee set forth in 37 CFR 1.18(d) accompanies this request.

2. By filing this petition: applicant is agreeing to make an election without traverse in a telephonic interview and elect an invention that meets the eligibility requirements set forth in the notice titled "Pilot Program for Green Technologies Including Greenhouse Gas Reduction," as modified by the notice titled "Elimination of Classification Requirement in the Green Technology Pilot Program," each of which was published in the Federal Register, if the Office determines that the claims are not obviously directed to a single invention.

3. This request is accompanied by statements of special status for the eligibility requirement.

4. The application contains no more than three (3) independent claims and twenty (20) total claims.

5. The application does not contain any multiple dependent claims.

6. Other attachments: Rescission of Previous Non Publication Request

Signature /Stuart H. Mayer/	Date July 28, 2010
Name (Print/Typed) Stuart H. Mayer	Registration Number 35,277

***Note**: Signatures of all the inventors or assignees of record of the entire interest or their representative(s) are required in accordance with 37 CFR 1.33 and 11.18. Please see 37 CFR 1.4(d) for the form of the signature. If necessary, submit multiple forms for more than one signature, see below*.*

☑ *Total of 1 forms are submitted.

The information is required to obtain or retain a benefit by the public which is to file (and by the USPTO to process) an application. Confidentiality is governed by 35 U.S.C. 122 and 37 CFR 1.11 and 1.14. This collection is estimated to take 12 hours to complete, including gathering, preparing, and submitting the completed application form to the USPTO. Time will vary depending upon the individual case. Any comments on the amount of time you require to complete this form and/or suggestions for reducing this burden, should be sent to the Chief Information Officer, U.S. Patent and Trademark Office, U.S. Department of Commerce, P.O. Box 1450, Alexandria, VA 22313-1450. DO NOT SEND FEES OR COMPLETED FORMS TO THIS ADDRESS. **SEND TO: Commissioner for Patents, P.O. Box 1450, Alexandria, VA 22313-1450.**

If you need assistance in completing the form, call 1-800-PTO-9199 and select option 2.

Under the Paperwork Reduction Act of 1995, no persons are required to respond to a collection of information unless it displays a valid OMB control number.

Instruction Sheet for Petition to Make Special Under the Green Technology Pilot Program

(Not to be Submitted to the USPTO)

The following is a summary of the requirements (for more information see the notices (i) "Pilot Program for Green Technologies Including Greenhouse Gas Reduction" and (ii) "Elimination of Classification Requirement in the Green Technology Pilot Program," available on the USPTO web site at http://www.uspto.gov/patents/init_events/green_tech.jsp):

(1) The application must be a non-reissue, non-provisional utility application filed under 35 U.S.C. 111(a), or an international application that has entered the national stage in compliance with 35 U.S.C. 371. The application must be previously filed before the publication date of the notice cited above. Reexamination proceedings are excluded from this pilot program.

(2) The application must contain three or fewer independent claims and twenty or fewer total claims. The application must not contain any multiple dependent claims. For an application that contains more than three independent claims or twenty total claims, or multiple dependent claims, applicant must file a preliminary amendment in compliance with 37 CFR 1.121 to cancel the excess claims and/or the multiple dependent claims at the time the petition to make special is filed.

(3) The claims must be directed to a single invention that materially enhances the quality of the environment, or that materially contributes to: (1) the discovery or development of renewable energy resources; (2) the more efficient utilization and conservation of energy resources; or (3) green house gas emission reduction (see the eligibility requirements of sections II and III of the notice (i) cited above). The petition must include a statement that, if the USPTO determines that the claims are directed to multiple inventions (e.g., in a restriction requirement), applicant will agree to make an election without traverse in a telephonic interview, and elect an invention that meets the eligibility requirements in section II or III of the notice (i) cited above.

(4) The petition to make special must be timely filed electronically using the USPTO electronic filing system, EFS-Web, and selecting the document description of "Petition for Green Tech Pilot" on the EFS-Web screen. Applicant should use form PTO/SB/420, which is available as a Portable Document Format (PDF) fillable form in EFS-Web and on the USPTO Web site.

(5) The petition to make special must be filed at least one day prior to the date that a first Office action (which may be an Office action containing only a restriction requirement) appears in the Patent Application Information Retrieval (PAIR) system. Applicant may check the status of the application using PAIR.

(6) The petition to make special must be accompanied by a request for early publication in compliance with 37 CFR 1.219 and the publication fee set forth in 37 CFR 1.18(d).

Privacy Act Statement

The **Privacy Act of 1974 (P.L. 93-579)** requires that you be given certain information in connection with your submission of the attached form related to a patent application or patent. Accordingly, pursuant to the requirements of the Act, please be advised that: (1) the general authority for the collection of this information is 35 U.S.C. 2(b)(2); (2) furnishing of the information solicited is voluntary; and (3) the principal purpose for which the information is used by the U.S. Patent and Trademark Office is to process and/or examine your submission related to a patent application or patent. If you do not furnish the requested information, the U.S. Patent and Trademark Office may not be able to process and/or examine your submission, which may result in termination of proceedings or abandonment of the application or expiration of the patent.

The information provided by you in this form will be subject to the following routine uses:

1. The information on this form will be treated confidentially to the extent allowed under the Freedom of Information Act (5 U.S.C. 552) and the Privacy Act (5 U.S.C 552a). Records from this system of records may be disclosed to the Department of Justice to determine whether disclosure of these records is required by the Freedom of Information Act.
2. A record from this system of records may be disclosed, as a routine use, in the course of presenting evidence to a court, magistrate, or administrative tribunal, including disclosures to opposing counsel in the course of settlement negotiations.
3. A record in this system of records may be disclosed, as a routine use, to a Member of Congress submitting a request involving an individual, to whom the record pertains, when the individual has requested assistance from the Member with respect to the subject matter of the record.
4. A record in this system of records may be disclosed, as a routine use, to a contractor of the Agency having need for the information in order to perform a contract. Recipients of information shall be required to comply with the requirements of the Privacy Act of 1974, as amended, pursuant to 5 U.S.C. 552a(m).
5. A record related to an International Application filed under the Patent Cooperation Treaty in this system of records may be disclosed, as a routine use, to the International Bureau of the World Intellectual Property Organization, pursuant to the Patent Cooperation Treaty.
6. A record in this system of records may be disclosed, as a routine use, to another federal agency for purposes of National Security review (35 U.S.C. 181) and for review pursuant to the Atomic Energy Act (42 U.S.C. 218(c)).
7. A record from this system of records may be disclosed, as a routine use, to the Administrator, General Services, or his/her designee, during an inspection of records conducted by GSA as part of that agency's responsibility to recommend improvements in records management practices and programs, under authority of 44 U.S.C. 2904 and 2906. Such disclosure shall be made in accordance with the GSA regulations governing inspection of records for this purpose, and any other relevant (*i.e.*, GSA or Commerce) directive. Such disclosure shall not be used to make determinations about individuals.
8. A record from this system of records may be disclosed, as a routine use, to the public after either publication of the application pursuant to 35 U.S.C. 122(b) or issuance of a patent pursuant to 35 U.S.C. 151. Further, a record may be disclosed, subject to the limitations of 37 CFR 1.14, as a routine use, to the public if the record was filed in an application which became abandoned or in which the proceedings were terminated and which application is referenced by either a published application, an application open to public inspection or an issued patent.
9. A record from this system of records may be disclosed, as a routine use, to a Federal, State, or local law enforcement agency, if the USPTO becomes aware of a violation or potential violation of law or regulation.

Serial No.: 12/603,285

IN THE UNITED STATES PATENT AND TRADEMARK OFFICE

Applicant: Sergey Frolov et al.

Serial No.: 12/603,285

Filed: 10/21/09

Title: THREE-STAGE FORMATION OF THIN-FILMS FOR PHOTOVOLTAIC DEVICES

Art Unit: 1795

Examiner: Unassigned

Confirmation No.: 6254

Docket No.: 2800/17

Via EFS WEB
Commissioner for Patents
P.O. Box 1450
Alexandria, VA 22313-1450

Certificate of Electronic Transmission
Under 37 C.F.R. §1.8

I hereby certify that this correspondence and any document referenced herein are being electronically filed with the USPTO via EFS-Web on 8/6/2010.

Marjorie Scariati

(Printed Name of Person Sending Correspondence)

/Marjorie Scariati/

(Signature)

STATEMENT OF SPECIAL STATUS RE: PETITION TO MAKE SPECIAL UNDER THE GREEN TECHNOLOGY PILOT PROGRAM

Sir:

This Statement of Special Status is accompanied by a Petition to Make Special Under the Green Technology Pilot Program.

Applicant submits that this application should be deemed eligible to participate in the Green Technology Pilot Program due to its subject matter. This application relates to renewable energy. Specifically, it relates to photovoltaic cells and systems incorporating such cells that can be used to convert solar energy to electrical and or/thermal energy.

CONCLUSION

The undersigned submits that all eligibility requirements have been met, specifically, the application was filed before December 9, 2009, has not received a Restriction Requirement or Office Action on the merits to date, contains no more than three (3) independent claims and

twenty (20) total claims, contains no multiple dependent claims, and a Rescission of Previous Non Publication Request and Petition to Make Special and accompanying Statement of Special Status have been submitted herewith.

It is respectfully requested that the Petition to Make Special Under the Green Technology Pilot Program be granted, and the application advance to examination promptly upon the granting of said Petition. Should the Examiner be of the view that an interview would expedite consideration of the application, request is made that the Examiner telephone the Applicants' attorney at (908) 518-7700 in order that any outstanding issues be resolved.

FEES

While it is not believed that any fees are due as a result of this Response, the Office is authorized to charge any fees required, to deposit account number 50-1047.

Respectfully submitted,

/Stuart H. Mayer/
Stuart H. Mayer
Registration No. 35,277

Attorney for Applicants
Mayer & Williams PC
251 North Avenue West, 2nd Floor
Westfield, NJ 07090
Tel: 908-518-7700
Fax: 908-518-7795

UNITED STATES PATENT AND TRADEMARK OFFICE

UNITED STATES DEPARTMENT OF COMMERCE
United States Patent and Trademark Office
Address: COMMISSIONER FOR PATENTS
P.O. Box 1450
Alexandria, Virginia 22313-1450
www.uspto.gov

APPLICATION NO.	FILING DATE	FIRST NAMED INVENTOR	ATTORNEY DOCKET NO.	CONFIRMATION NO.
12/603,285	10/21/2009	Sergey Frolov	2800/17	6254

27774 7590 08/12/2010
MAYER & WILLIAMS PC
251 NORTH AVENUE WEST
2ND FLOOR
WESTFIELD, NJ 07090

EXAMINER

ART UNIT	PAPER NUMBER
1795	

MAIL DATE	DELIVERY MODE
08/12/2010	PAPER

Please find below and/or attached an Office communication concerning this application or proceeding.

The time period for reply, if any, is set in the attached communication.

UNITED STATES PATENT AND TRADEMARK OFFICE

Commissioner for Patents
United States Patent and Trademark Office
P.O. Box 1450
Alexandria, VA 22313-1450
www.uspto.gov

MAYER & WILLIAMS PC
251 NORTH AVENUE WEST
2ND FLOOR
WESTFIELD NJ 07090

AUG 12 2010

In re Application of	:	
Sergey Frolov et al.	:	DECISION ON PETITION
Application No. 12/603,285	:	TO MAKE SPECIAL UNDER
Filed: October 21, 2009	:	THE GREEN TECHNOLOGY
Attorney Docket No. 2800/17	:	PILOT PROGRAM

This is a decision on the petition under 37 CFR 1.102, filed August 06, 2010, to make the above-identified application special under the pilot program for applications pertaining to Green Technologies as set forth 74 Federal Register Notice 64666 (December 8, 2009).

The petition is **GRANTED**.

A grantable petition to make an application special under 37 CFR 1.102 and the pilot program as set forth in 74 FR 64666 must be directed to a nonprovisional application filed under 35 USC 111(a) or be a national stage entry under 35 USC 371, exclusive of any reissue applications and be filed prior to the date of the notice, December 8, 2009.

In order to qualify for special status, the following requirements must be met. 1) The application must have no more than 3 independent claims and no more than 20 total claims. 2) The application must not contain any multiple dependent claims. 3) The petition must state the basis for seeking special status, i.e., the claimed invention either: A) materially enhances the quality of the environment or B) materially contributes to: i) the discovery or development of renewable energy resources, ii) the more efficient utilization and conservation of energy resources, or iii) greenhouse gas emission reduction. 4) If the disclosure is not clear on its face that the claimed invention materially contributes under category (A) or (B), the petition must be accompanied by a statement by the applicant, assignee, or an attorney/agent registered to practice before the Office explaining how the materiality standard is met. 5) A statement that applicant will agree to make an election without traverse in a telephonic interview if a restriction requirement is made by the examiner. 6) The petition to make special must be filed electronically. 7) The petition must be filed at least one day prior to the date that a first Office Action appears in the Patent Application Information Retrieval (PAIR) system. 8) The petition must be accompanied by a request for early publication in compliance with 37 CFR 1.219 and include the publication fee as set forth in 37 CFR 1.18(d).

The requirement for a fee for consideration of the petition to make special for applications pertaining to Green Technologies has been waived.

The instant petition complies with items 1 – 8 above. Accordingly, the above-identified application has been accorded "special" status.

Telephone inquires concerning this decision should be directed to Blaine Copenheaver at 571-272-1156.

The application is being forwarded to the Technology Center Art Unit 1795 for action on the merits commensurate with this decision.

/Blaine Copenheaver/

Blaine Copenheaver
Quality Assurance Specialist
Technology Center 1700

UNITED STATES PATENT AND TRADEMARK OFFICE

UNITED STATES DEPARTMENT OF COMMERCE
United States Patent and Trademark Office
Address: COMMISSIONER FOR PATENTS
P.O. Box 1450
Alexandria, Virginia 22313-1450
www.uspto.gov

APPLICATION NO.	FILING DATE	FIRST NAMED INVENTOR	ATTORNEY DOCKET NO.	CONFIRMATION NO.
12/603,291	10/21/2009	Hirotoshi Miyazawa	6639P803	6267

8791 7590 09/10/2010
BLAKELY SOKOLOFF TAYLOR & ZAFMAN LLP
1279 OAKMEAD PARKWAY
SUNNYVALE, CA 94085-4040

EXAMINER
WU, XIAO MIN

ART UNIT	PAPER NUMBER
2628	

MAIL DATE	DELIVERY MODE
09/10/2010	PAPER

Please find below and/or attached an Office communication concerning this application or proceeding.

The time period for reply, if any, is set in the attached communication.

UNITED STATES PATENT AND TRADEMARK OFFICE

Commissioner for Patents
United States Patent and Trademark Office
P.O. Box 1450
Alexandria, VA 22313-1450
www.uspto.gov

BLAKELY SOKOLOFF TAYLOR & ZAFMAN LLP
1279 OAKMEAD PARKWAY
SUNNYVALE CA 94085-4040

In re Application of	:	
MIYAZAWA, HIROTOSHI	:	DECISION ON REQUEST TO
Application No. 12/603,291	:	PARTICIPATE IN PATENT
Filed: October 21, 2009	:	PROSECUTION HIGHWAY
Attorney Docket No. **6639P803**	:	PROGRAM AND PETITION
	:	TO MAKE SPECIAL UNDER
	:	37 CFR 1.102(d)

This is a decision on the request to participate in the Patent Prosecution Highway (PPH) program and the petition under 37 CFR 1.102(d), filed July 8, 2010 to make the above-identified application special.

The request and petition are **GRANTED**.

A grantable request to participate in the PPH program and petition to make special require:

(1) The U.S. application must validly claim priority under 35 U.S.C. 119(a) to one or more applications filed in the JPO;
(2) Applicant must submit a copy of the allowable/patentable claim(s) from the JPO application(s) along with an English translation thereof and a statement that the English translation is accurate;
(3) All the claims in the U.S. application must sufficiently correspond or be amended to sufficiently correspond to the allowable/patentable claim(s) in the JPO application(s);
(4) Examination of the U.S. application has not begun;
(5) Applicant must submit a copy of all the office actions from each of the JPO application(s) containing the allowable/patentable claim(s) along with an English translation thereof and a statement that the English translation is accurate; and
(6) Applicant must submit an IDS listing the documents cited by the JPO examiner in the JPO office action along with copies of documents except U.S. patents or U.S. patent application publications.

The request to participate in the PPH program and petition comply with the above requirements. Accordingly, the above-identified application has been accorded "special" status.

Telephone inquiries concerning this decision should be directed to Doris To at 571-272-7629.

All other inquiries concerning the examination or status of the application should be directed to Patent Application Information Retrieval (PAIR) system.

The application is being forwarded to the examiner for action on the merits commensurate with this decision.

/Doris To/

Doris To
Quality Assurance Specialist
Technology Center 2600
Communications

PTO/SB/20PCT-KR (06-10)
Approved for use through 01/31/2012. OMB 0651-0058
U.S. Patent and Trademark Office; U. S. DEPARTMENT OF COMMERCE
Under the Paperwork Reduction Act of 1995, no persons are required to respond to a collection of information unless it displays a valid OMB control number.

REQUEST FOR PARTICIPATION IN THE PATENT COOPERATION TREATY - PATENT PROSECUTION HIGHWAY (PCT-PPH) PILOT PROGRAM BETWEEN THE KOREAN INTELLECTUAL PROPERTY OFFICE (KIPO) AND THE USPTO

Application No:	12/603,294	Filing date:	October 21, 2009
First Named Inventor:	Timothy Groff		
Title of the Invention:	Handheld Vacuum Cleaner		

THIS REQUEST FOR PARTICIPATION IN THE PCT-PPH PILOT PROGRAM ALONG WITH THE REQUIRED DOCUMENTS MUST BE SUBMITTED VIA EFS-WEB. INFORMATION REGARDING EFS-WEB IS AVAILABLE AT HTTP://WWW.USPTO.GOV/EBC/EFS_HELP.HTML

APPLICANT HEREBY REQUESTS PARTICIPATION IN THE PCT-PPH PROGRAM AND PETITIONS TO MAKE THE ABOVE-IDENTIFIED APPLICATION SPECIAL UNDER THE PCT-PPH PROGRAM.

The above-identified application is (1) a national stage entry of the corresponding PCT application, or (2) a national stage entry of another PCT application which claims priority to the corresponding PCT application, or (3) a national application that claims domestic/ foreign priority to the corresponding PCT application, or (4) a national application which forms the basis for the priority claim in the corresponding PCT application, or (5) a continuing application of a U.S. application that satisfies one of (1) to (4) above, or (6) a U.S. application that claims domestic benefit to a U.S. provisional application which forms the basis for the priority claim in the corresponding PCT application.

The corresponding PCT application number(s) is/are: PCT/US2009/061508

The international date of the corresponding PCT application(s) is/are: October 21, 2009

I. List of Required Documents:

a. **A copy of the latest international work product (WO/ISA, WO/IPEA, or IPER) in the above–identified corresponding PCT application(s)**

- [x] Is attached.
- [ ] Is not attached because the document is already in the U.S. application.

b. **A copy of all claims which were indicated as having novelty, inventive step and industrial applicability in the above-identified corresponding PCT application(s).**

- [ ] Is attached.
- [x] Is not attached because the document is already in the U.S. application.

c. **English translations of the documents in a. and b. above are attached (if the documents are not in the English language). A statement that the English translation is accurate is attached for the document in b. above.**

This collection of information is required by 35 U.S.C. 119, 37 CFR 1.55, and 37 CFR 1.102(d). The information is required to obtain or retain a benefit by the public, which is to file (and by the USPTO to process) an application. Confidentiality is governed by 35 U.S.C. 122 and 37 CFR 1.11 and 1.14. This collection is estimated to take 2 hours to complete, including gathering, preparing, and submitting the completed application form to the USPTO. Time will vary depending upon the individual case. Any comments on the amount of time you require to complete this form and/or suggestions for reducing this burden should be sent to the Chief Information Officer, U.S. Patent and Trademark Office, U.S. Department of Commerce, P.O. Box 1450, Alexandria, VA 22313-1450. DO NOT SEND FEES OR COMPLETED FORMS TO THIS ADDRESS.

Approved for use through 01/31/2012. OMB 0651-0058
U.S.Patent and Trademark Office; U.S. DEPARTMENT OF COMMERCE

Under the Paperwork Reduction Act of 1995, no persons are required to respond to a collection of information unless it displays a valid OMB control number.

REQUEST FOR PARTICIPATION IN THE PCT-PPH PILOT PROGRAM BETWEEN THE KIPO AND THE USPTO

(continued)

Application No.:	12/603,294
First Named Inventor:	Timothy Groff

d. **(1) An information disclosure statement listing the documents cited in the international work products (ISR, WO/ISA, WO/IPEA, IPER) of the corresponding PCT application.**

☐ Is attached

☒ Has already been filed in the above-identified U.S. application on August 18, 2010

(2) Copies of all documents (except) for U.S. patents or U.S. patent application publications)

☐ Are attached.

Have already been filed in the above-identified U.S. application on August 18, 2010 & March 2, 2010

II. Claims Correspondence Table:

Claims in US Application	Patentable Claims in the corresponding PCT Application	Explanation regarding the correspondence
1-28	1-28	Claims are identical

III. All the claims in the US application sufficiently correspond to the patentable claims in the corresponding PCT application.

Signature Gayle A Bush	Date 2010/10/4
Name (Print/Typed) Gayle A. Bush	Registration Number 52,677

Privacy Act Statement

The **Privacy Act of 1974 (P.L. 93-579)** requires that you be given certain information in connection with your submission of the attached form related to a patent application or patent. Accordingly, pursuant to the requirements of the Act, please be advised that: (1) the general authority for the collection of this information is 35 U.S.C. 2(b)(2); (2) furnishing of the information solicited is voluntary; and (3) the principal purpose for which the information is used by the U.S. Patent and Trademark Office is to process and/or examine your submission related to a patent application or patent. If you do not furnish the requested information, the U.S. Patent and Trademark Office may not be able to process and/or examine your submission, which may result in termination of proceedings or abandonment of the application or expiration of the patent.

The information provided by you in this form will be subject to the following routine uses:

1. The information on this form will be treated confidentially to the extent allowed under the Freedom of Information Act (5 U.S.C. 552) and the Privacy Act (5 U.S.C 552a). Records from this system of records may be disclosed to the Department of Justice to determine whether disclosure of these records is required by the Freedom of Information Act.
2. A record from this system of records may be disclosed, as a routine use, in the course of presenting evidence to a court, magistrate, or administrative tribunal, including disclosures to opposing counsel in the course of settlement negotiations.
3. A record in this system of records may be disclosed, as a routine use, to a Member of Congress submitting a request involving an individual, to whom the record pertains, when the individual has requested assistance from the Member with respect to the subject matter of the record.
4. A record in this system of records may be disclosed, as a routine use, to a contractor of the Agency having need for the information in order to perform a contract. Recipients of information shall be required to comply with the requirements of the Privacy Act of 1974, as amended, pursuant to 5 U.S.C. 552a(m).
5. A record related to an International Application filed under the Patent Cooperation Treaty in this system of records may be disclosed, as a routine use, to the International Bureau of the World Intellectual Property Organization, pursuant to the Patent Cooperation Treaty.
6. A record in this system of records may be disclosed, as a routine use, to another federal agency for purposes of National Security review (35 U.S.C. 181) and for review pursuant to the Atomic Energy Act (42 U.S.C. 218(c)).
7. A record from this system of records may be disclosed, as a routine use, to the Administrator, General Services, or his/her designee, during an inspection of records conducted by GSA as part of that agency's responsibility to recommend improvements in records management practices and programs, under authority of 44 U.S.C. 2904 and 2906. Such disclosure shall be made in accordance with the GSA regulations governing inspection of records for this purpose, and any other relevant (*i.e.*, GSA or Commerce) directive. Such disclosure shall not be used to make determinations about individuals.
8. A record from this system of records may be disclosed, as a routine use, to the public after either publication of the application pursuant to 35 U.S.C. 122(b) or issuance of a patent pursuant to 35 U.S.C. 151. Further, a record may be disclosed, subject to the limitations of 37 CFR 1.14, as a routine use, to the public if the record was filed in an application which became abandoned or in which the proceedings were terminated and which application is referenced by either a published application, an application open to public inspection or an issued patent.
9. A record from this system of records may be disclosed, as a routine use, to a Federal, State, or local law enforcement agency, if the USPTO becomes aware of a violation or potential violation of law or regulation.

UNITED STATES PATENT AND TRADEMARK OFFICE

UNITED STATES DEPARTMENT OF COMMERCE
United States Patent and Trademark Office
Address: COMMISSIONER FOR PATENTS
P.O. Box 1450
Alexandria, Virginia 22313-1450
www.uspto.gov

APPLICATION NO.	FILING DATE	FIRST NAMED INVENTOR	ATTORNEY DOCKET NO.	CONFIRMATION NO.
12/603,294	10/21/2009	Timothy Groff	025726-9065-01	6273

60840 7590 10/05/2010
MICHAEL, BEST & FRIEDRICH LLP
100 EAST WISCONSIN AVENUE
SUITE 3300
MILWAUKEE, WI 53202

EXAMINER

ART UNIT	PAPER NUMBER
3723	

MAIL DATE	DELIVERY MODE
10/05/2010	PAPER

Please find below and/or attached an Office communication concerning this application or proceeding.

The time period for reply, if any, is set in the attached communication.

UNITED STATES PATENT AND TRADEMARK OFFICE

Commissioner for Patents
United States Patent and Trademark Office
P.O. Box 1450
Alexandria, VA 22313-1450
www.uspto.gov

MICHAEL, BEST & FRIEDRICH LLP
100 EAST WISCONSIN AVENUE
SUITE 3300
MILWAUKEE WI 53202

In re Application of	:	
GROFF, TIMOTHY et al	:	DECISION ON REQUEST TO
Application No. 12/603,294	:	PARTICIPATE IN PATENT
Filed: Oct. 21, 2009	:	PCT/PROSECUTION HIGHWAY
Attorney Docket No. 025726-9065-01	:	PROGRAM AND PETITION
Title: HANDHELD VACUUM CLEANER	:	37 CFR 1.102(d)

This is a decision on the renewed request to participate in the Patent Prosecution Highway (PPH) program and the petition under 37 CFR 1.102(d), filed October 4, 2010, to make the above-identified application special.

The request and petition are granted.

A grantable request to participate in the PPH program and petition to make special require:
(1) The U.S. application must disclose an eligible relationship to one or more PCT applications filed in the KIPO, JPO, EPO or USPTO;
(2) Applicant must submit a copy of the allowable/patentable claim(s) from the PCT application(s) latest international work product (the written opinion or the IPER) along with an English translation thereof and a statement that the English translation is accurate;
(3) All the claims in the U.S. application must sufficiently correspond or be amended to sufficiently correspond to the allowable/patentable claim(s) in the PCT application(s);
(4) Examination of the U.S. application has not begun;
(5) Applicant must submit a copy of the latest international work product from the PCT application containing the allowable/patentable claim(s) along with an English translation thereof and a statement that the English translation is accurate; and
(6) Applicant must submit an IDS listing the documents cited by the PCT examiner in the international work product along with copies of documents except U.S. patents or U.S. patent application publications.

In light of the petition being properly submitted, the request to participate in the PPH program and the petition comply with the above requirements. Accordingly, the above-identified application has been accorded "special" status.

The applicant is encouraged to cite and submit all relevant prior art references, if any, to facilitate examination in this application.

Other inquiries concerning the examination or status of the application should be directed to Joseph J. Hail, the SPE of Art Unit 3723 and 571-272-3672 for Class 15/344 and also accessible in the PAIR system at http://www.uspto.gov/ebc.index.html.

All other inquiries concerning the examination or status of the application should be directed to the Patent Application Information Retrieval (PAIR) system.

This application will be docketed to an examiner for action on the merits commensurate with this decision.

Telephone inquiries concerning this decision should be directed to Henry C. Yuen, at 571-272-4856.

The petition is **granted.**

/Henry C. Yuen/

Henry C. Yuen, Special Programs Examiner
Technology Center 3700 – Mechanical Engineering,
Manufacturing and Products
571-272-4856

UNITED STATES PATENT AND TRADEMARK OFFICE

UNITED STATES DEPARTMENT OF COMMERCE
United States Patent and Trademark Office
Address: COMMISSIONER FOR PATENTS
P.O. Box 1450
Alexandria, Virginia 22313-1450
www.uspto.gov

APPLICATION NO.	FILING DATE	FIRST NAMED INVENTOR	ATTORNEY DOCKET NO.	CONFIRMATION NO.
12/603,309	10/21/2009	Hideaki Nakai	6639P807	6294

7590 08/31/2010
BLAKELY SOKOLOFF TAYLOR & ZAFMAN LLP
1279 OAKMEAD PARKWAY
SUNNYVALE, CA 94085-4040

EXAMINER
KOONTZ, TAMMY J

ART UNIT	PAPER NUMBER
3974	

MAIL DATE	DELIVERY MODE
08/31/2010	PAPER

DECISION GRANTING PETITION UNDER 37 CFR 1.138(d)

The declaration of express abandonment is recognized

This is in response to the petition under 37 CFR 1.138(d), requesting for a refund of any previously paid search fee and excess claims fee in the above-identified application.

The petition is granted.

The express abandonment is recognized. Any previously paid search fee and excess claims fee are hereby refunded.

Telephone inquiries should be directed to the Office of Data Management at (571) 272-4200.

Betty Powell

Patent Publication Branch
Office of Data Management

FORM PET651G (Rev. 08/07)

UNITED STATES PATENT AND TRADEMARK OFFICE

Commissioner for Patents
United States Patent and Trademark Office
P.O. Box 1450
Alexandria, VA 22313-1450
www.uspto.gov

Paper No.

OPPENHEIMER WOLFF & DONNELLY LLP
45 SOUTH SEVENTH STREET, SUITE 3300
MINNEAPOLIS MN 55402

MAILED
NOV 07 2011
OFFICE OF PETITIONS

In re Application of Elizondo et al. Application No. 12/603,315 Filed: October 21, 2009 Attorney Docket No.: 22561-9201/US Title: ANCHORING STRUCTURE WITH CONCAVE LANDING ZONE	DECISION ON PETITION PURSUANT TO 37 C.F.R. § 1.28(c)

This is a notice regarding your request for acceptance of a fee deficiency submission pursuant to 37 C.F.R. § 1.28, received on September 29, 2011. On September 1, 1998, the Court of Appeals for the Federal Circuit held that 37 C.F.R. § 1.28(c) is the sole provision governing the time for correction of the erroneous payment of the issue fee as a small entity. See DH Technology v. Synergystex International, Inc. 154 F.3d 1333, 47 USPQ2d 1865 (Fed. Cir. Sept. 1, 1998).

The Office no longer investigates or rejects original or reissue applications under 37 C.F.R. § 1.56. 1098 Off. Gaz. Pat. Office 502 (January 3, 1989). Therefore, nothing in this notice is intended to imply that an investigation was done.

Petitioner has identified the particular type of fees that were erroneously paid as a small entity, when the small entity fees were actually paid, the small entity fees that were actually paid, the deficiency owed amounts, and the total deficiency payment owed.

Your fee deficiency submission pursuant to 37 C.F.R. § 1.28(c) is hereby accepted. The petition is **GRANTED** accordingly.

The deficiency payment of $853.00 has been received.

This application is no longer entitled to small entity status. Accordingly, all future fees paid in this application must be paid at the large entity rate.

The Technology Center will be notified of this decision, and jurisdiction over this application is transferred to the Technology Center, so that the application may receive further processing. The Technology Center's support staff will notify the Examiner of this decision, so that the present application can receive further processing in due course.

It is noted that the address listed on the petition differs from the address of record. The application file does not indicate a change of correspondence address has been filed in this case, although the address given on the petition differs from the address of record. If Petitioner desires to receive future correspondence regarding this application, the change of correspondence address must be submitted. A courtesy copy of this decision will be mailed to Petitioner. However, all future correspondence will be directed to the address of record until such time as appropriate instructions are received to the contrary. Petitioner will not receive future correspondence related to this application unless Change of Correspondence Address, Patent Form (PTO/SB/122) is submitted for the above-identified application. For Petitioner's convenience, a blank Change of Correspondence Address, Patent Form (PTO/SB/122), may be found at http://www.uspto.gov/web/forms/sb0122.pdf.

It is not apparent whether the person signing the statement which asserts that small entity status was established in good faith was in a position to have firsthand or direct knowledge of the facts and circumstances of the establishment of small entity status. Nevertheless, such statement is being treated as having been made as the result of a reasonable inquiry into the facts and circumstances of such establishment. In the event that such an inquiry has not been made, Petitioner must make such an inquiry. If such inquiry results in the discovery that the establishment of small entity status was not made in good faith, Petitioner must notify the Office.

Telephone inquiries regarding *this decision* should be directed to the undersigned at (571) 272-3225.[1] All other inquiries

---

1 Petitioner will note that all practice before the Office should be in writing, and the action of the Office will be based exclusively on the written record in the Office. See 37 C.F.R. §1.2. As such, Petitioner is reminded

concerning examination procedures or status of the application should be directed to the Technology Center.

Paul Shanoski
Senior Attorney
Office of Petitions

cc: Kyle E. Conklin
Sterne, Kessler , Goldstein & Fox
1100 New York Avenue NW
Washington, DC 20005-3934

that no telephone discussion may be controlling or considered authority for Petitioner's further action(s).

UNITED STATES PATENT AND TRADEMARK OFFICE

Commissioner for Patents
United States Patent and Trademark Office
P.O. Box 1450
Alexandria, VA 22313-1450
www.uspto.gov

MAILED

NOV 10 2010

OFFICE OF PETITIONS

WPAT PC
INTELLECTUAL PROPERTY ATTORNEYS
2030 MAIN STREET SUITE 1300
IRVINE CA 92614

In re Application of	:	
Wu, et al.	:	
Application No. 12/603,327	:	DECISION DISMISSING PETITION
Filed: October 21, 2009	:	
Attorney Docket No. 18306-257	:	

This is a decision on the "RESPONSE TO DECISION DISMISSING DECISION", filed June 1, 2010, which is being treated as a petition under 37 CFR 1.53 to accord the above-identified application a filing date of October 25, 2006. This decision is also in response to the "PETITION UNDER 37 C.F.R 1.55(c) FOR FOREIGN PRIORITY", also filed June 1, 2010.

The petition under 37 CFR 1.53 is **DISMISSED**.

The petition under 37 CFR 1.55(c) is **DISMISSED**.

Background:

Applicants filed application number 11/552,911 on October 25, 2006 via EFS web. On that same day, applicants filed another application, 11/552,931, also through EFW web. However, when filing the '931 application, applicants inadvertently submitted the application papers from the '911 application. This error was discovered in February of 2007, and on March 2, 2007, applicants filed an Express Abandonment of the '931 application.

The '911 application subsequently issued as Patent No. 7,357,678 on April 15, 2008.

Applicants next filed the application papers originally intended for the '931 application on October 21, 2009, and those papers were accorded the instant application number (12/603,327).

In a petition filed January 20, 2010, applicants requesed that the instant application be accorded a filing date of October 25, 2006. Applicants also requested that the application number of the instant application be changed to 11/552,931, or in the alternative, that the '931 application be revived, and that the contents of the '931 application be replaced with the instant application papers.

The crux of petitioner's argument was that because he intended to file the instant application papers on October 25, 2006, but made a clerical error in uploading the papers via EFS web, nevertheless petitioner should be entitled to the October 25, 2006 date.

Petitioner's argument was dismissed in a decision mailed on March 29, 2010. The decision pointed out that the PTO file is the official record of papers originally filed in this application. A review of the official file revealed that the instant application was not filed on October 25, 2006, since those papers are not present in the file on that date. The decision also dismissed petitioner's request that the instant application number be changed to 11/552,931. The decision noted that the applicants intentionally abandoned that application by filing an Express Abandonment on March 2, 2007. Accordingly, the application could not be revived pursuant to 37 CFR 1.137(b).

Renewed Petition under 37 CFR 1.53:

With the instant renewed petition, petitioner argues that he should be accorded the October 25, 2006 date because petitioner was "in possession" of the invention on October 25, 2006, under the "first to invent" doctrine. This doctrine, codified in 35 USC 102(g), states that the Office shall not award a patent to one who files a patent application if another party was first to invent the subject matter thereof. The issue of "first to invent" frequently arises in an interference proceeding, and has no bearing on an application's filing date. 35 USC 111(a)(4) states that "[t]he filing date of an application shall be the date on which the specification and any required drawing are received in the Patent and Trademark Office."

Here, the record does not disclose that the specification and drawings were received in the Office on October 25, 2006, and as such, the application can not be accorded that filing date.

Petition under 37 CFR 1.55(c):

A petition under 37 CFR 1.55(c) to accept an unintentionally delayed claim for priority requires:

(1) The nonprovisional application claiming the benefit of an earlier filing date must be filed on or after November 29, 2000;

(2) the claim submitted with the petition must identify the prior foreign application for which priority is claimed, as well as any foreign application for the same subject matter and having a filing date before that of the application for which priority is claimed, by the application number, country, and the filing date;

(3) **the surcharge as set forth in 37 CFR 1.17(t);**

(4) a statement that the entire delay between the date the claim was due under 37 CFR 1.55(a)(1) and the date the claim was filed was unintentional. (The Commissioner may require additional information where there is a question whether the delay was unintentional.); and

(5) the above-identified nonprovisional application must be filed within 12 months of the filing date of the foreign application.

Here, petitioner has not submitted the surcharge, currently $1,410. As such, the instant petition will not be considered on the merits.

Any request for reconsideration of this decision should be filed within **TWO (2) MONTHS** of the date of this decision in order to be considered timely. 37 CFR 1.181(f). This time period may not be extended pursuant to 37 CFR 1.136.

Further correspondence with respect to this matter should be addressed as follows:

By mail: Mail Stop Petitions
Commissioner for Patents
P.O. Box 1450
Alexandria VA 22313-1450

By FAX: (571)273-8300
Attn: Office of Petitions

The application is being forwarded to Group Art Unit 2833 for docketing and examination in due course.

Telephone inquiries related to this decision should be directed to Petitions Attorney Cliff Congo at (571)272-3207.

Chris Bottorff
Supervisory Petitions Examiner
Office of Petitions

PTO/SB/20PCT-US (09-10)
Approved for use through 01/31/2012. OMB 0651-0058
U.S. Patent and Trademark Office; U.S. DEPARTMENT OF COMMERCE
Under the Paperwork Reduction Act of 1995, no persons are required to respond to a collection of information unless it displays a valid OMB control number.

REQUEST FOR PARTICIPATION IN THE PATENT COOPERATION TREATY - PATENT PROSECUTION HIGHWAY (PCT-PPH) PILOT PROGRAM IN A U.S. APPLICATION WHERE THE USPTO WAS THE ISA OR IPEA

Application No:	12/603340	Filing date:	2009-10-21
First Named Inventor:	Bruce Richard Roberts, et al		
Title of the Invention:	HIGH EFFICIENCY LOW POWER CAPACITOR CHARGED DC DRIVER		

THIS REQUEST FOR PARTICIPATION IN THE PCT-PPH PILOT PROGRAM ALONG WITH THE REQUIRED DOCUMENTS MUST BE SUBMITTED VIA EFS-WEB. INFORMATION REGARDING EFS-WEB IS AVAILABLE AT HTTP://WWW.USPTO.GOV/EBC/EFS_HELP.HTML

APPLICANT HEREBY REQUESTS PARTICIPATION IN THE PCT-PPH PROGRAM AND PETITIONS TO MAKE THE ABOVE-IDENTIFIED APPLICATION SPECIAL UNDER THE PCT-PPH PROGRAM.

The above-identified application is (1) a national stage entry of the corresponding PCT application, or (2) a national stage entry of another PCT application which claims priority to the corresponding PCT application, or (3) a national application that claims domestic/ foreign priority to the corresponding PCT application, or (4) a national application which forms the basis for the priority claim in the corresponding PCT application, or (5) a continuing application of a U.S. application that satisfies one of (1) to (4) above, or (6) a U.S. application that claims domestic benefit to a U.S. provisional application which forms the basis for the priority claim in the corresponding PCT application.

The corresponding PCT application number(s) is/are: US10/45017

The international date of the corresponding PCT application(s) is/are: 2010-08-10

I. List of Required Documents:

a. **A copy of the latest international work product (WO/ISA, WO/IPEA, or IPER) in the above-identified corresponding PCT application(s)**

☐ Is attached

☒ Is not attached because the document is already in the U.S. application.

b. **A copy of all claims which were indicated as having novelty, inventive step and industrial applicability in the above-identified corresponding PCT application(s).**

☐ Is attached.

☒ Is not attached because the document is already in the U.S. application.

c. **English translations of the documents in a. and b. above are attached (if the documents are not in the English language). A statement that the English translation is accurate is attached for the document in b. above.**

This collection of information is required by 35 U.S.C. 119, 37 CFR 1.55, and 37 CFR 1.102(d). The information is required to obtain or retain a benefit by the public, which is to file (and by the USPTO to process) an application. Confidentiality is governed by 35 U.S.C. 122 and 37 CFR 1.11 and 1.14. This collection is estimated to take 2 hours to complete, including gathering, preparing, and submitting the completed application form to the USPTO. Time will vary depending upon the individual case. Any comments on the amount of time you require to complete this form and/or suggestions for reducing this burden should be sent to the Chief Information Officer, U.S. Patent and Trademark Office, U.S. Department of Commerce, P.O. Box 1450, Alexandria, VA 22313-1450. DO NOT SEND FEES OR COMPLETED FORMS TO THIS ADDRESS.

Under the Paperwork Reduction Act of 1995, no persons are required to respond to a collection of information unless it displays a valid OMB control number.

REQUEST FOR PARTICIPATION IN THE PCT-PPH PILOT PROGRAM IN A U.S. APPLICATION WHERE THE USPTO WAS THE ISA OR IPEA

(continued)

Application No.:	12/603340
First Named Inventor:	Bruce Richard Roberts, et al

d. **(1) An information disclosure statement listing the documents cited in the international work products (ISR, WO/ISA, WO/IPEA, IPER) of the corresponding PCT application.**

☐ Is attached

☒ Has already been filed in the above-identified U.S. application on November 29, 2010

(2) Copies of all documents (except) for U.S. patents or U.S. patent application publications)

☐ Are attached.

☒ Have already been filed in the above-identified U.S. application on November 29, 2010

II. Claims Correspondence Table:

Claims in US Application	Patentable Claims in the corresponding PCT Application	Explanation regarding the correspondence
1-16		Claims 1 to 16 of PCT/US2010/45017 correspond to US claims
		1-16 submitted on 2009-10-21

III. All the claims in the US application sufficiently correspond to the patentable claims in the corresponding PCT application.

Signature /ptd47323/	Date 2010-11-30
Name (Print/Typed) Peter T. DiMauro	Registration Number 47,323

Privacy Act Statement

The **Privacy Act of 1974 (P.L. 93-579)** requires that you be given certain information in connection with your submission of the attached form related to a patent application or patent. Accordingly, pursuant to the requirements of the Act, please be advised that: (1) the general authority for the collection of this information is 35 U.S.C. 2(b)(2); (2) furnishing of the information solicited is voluntary; and (3) the principal purpose for which the information is used by the U.S. Patent and Trademark Office is to process and/or examine your submission related to a patent application or patent. If you do not furnish the requested information, the U.S. Patent and Trademark Office may not be able to process and/or examine your submission, which may result in termination of proceedings or abandonment of the application or expiration of the patent.

The information provided by you in this form will be subject to the following routine uses:

1. The information on this form will be treated confidentially to the extent allowed under the Freedom of Information Act (5 U.S.C. 552) and the Privacy Act (5 U.S.C 552a). Records from this system of records may be disclosed to the Department of Justice to determine whether disclosure of these records is required by the Freedom of Information Act.
2. A record from this system of records may be disclosed, as a routine use, in the course of presenting evidence to a court, magistrate, or administrative tribunal, including disclosures to opposing counsel in the course of settlement negotiations.
3. A record in this system of records may be disclosed, as a routine use, to a Member of Congress submitting a request involving an individual, to whom the record pertains, when the individual has requested assistance from the Member with respect to the subject matter of the record.
4. A record in this system of records may be disclosed, as a routine use, to a contractor of the Agency having need for the information in order to perform a contract. Recipients of information shall be required to comply with the requirements of the Privacy Act of 1974, as amended, pursuant to 5 U.S.C. 552a(m).
5. A record related to an International Application filed under the Patent Cooperation Treaty in this system of records may be disclosed, as a routine use, to the International Bureau of the World Intellectual Property Organization, pursuant to the Patent Cooperation Treaty.
6. A record in this system of records may be disclosed, as a routine use, to another federal agency for purposes of National Security review (35 U.S.C. 181) and for review pursuant to the Atomic Energy Act (42 U.S.C. 218(c)).
7. A record from this system of records may be disclosed, as a routine use, to the Administrator, General Services, or his/her designee, during an inspection of records conducted by GSA as part of that agency's responsibility to recommend improvements in records management practices and programs, under authority of 44 U.S.C. 2904 and 2906. Such disclosure shall be made in accordance with the GSA regulations governing inspection of records for this purpose, and any other relevant (*i.e.*, GSA or Commerce) directive. Such disclosure shall not be used to make determinations about individuals.
8. A record from this system of records may be disclosed, as a routine use, to the public after either publication of the application pursuant to 35 U.S.C. 122(b) or issuance of a patent pursuant to 35 U.S.C. 151. Further, a record may be disclosed, subject to the limitations of 37 CFR 1.14, as a routine use, to the public if the record was filed in an application which became abandoned or in which the proceedings were terminated and which application is referenced by either a published application, an application open to public inspection or an issued patent.
9. A record from this system of records may be disclosed, as a routine use, to a Federal, State, or local law enforcement agency, if the USPTO becomes aware of a violation or potential violation of law or regulation.

UNITED STATES PATENT AND TRADEMARK OFFICE

UNITED STATES DEPARTMENT OF COMMERCE
United States Patent and Trademark Office
Address: COMMISSIONER FOR PATENTS
P.O. Box 1450
Alexandria, Virginia 22313-1450
www.uspto.gov

APPLICATION NO.	FILING DATE	FIRST NAMED INVENTOR	ATTORNEY DOCKET NO.	CONFIRMATION NO.
12/603,340	10/21/2009	Bruce Richard Roberts	239224 GECZ 201045US01	6343

27885 7590 01/04/2011
FAY SHARPE LLP
1228 Euclid Avenue, 5th Floor
The Halle Building
Cleveland, OH 44115

EXAMINER

ART UNIT	PAPER NUMBER
2821	

MAIL DATE	DELIVERY MODE
01/04/2011	PAPER

Please find below and/or attached an Office communication concerning this application or proceeding.

The time period for reply, if any, is set in the attached communication.

UNITED STATES PATENT AND TRADEMARK OFFICE

Commissioner for Patents
United States Patent and Trademark Office
P.O. Box 1450
Alexandria, VA 22313-1450
www.uspto.gov

FAY SHARPE LLP
1228 Euclid Avenue, 5th Floor
The Halle Building
Cleveland OH 44115

In re Application of	**: DECISION ON REQUEST TO**
ROBERTS et al.	**: PARTICIPATE IN THE PATENT**
Application No.: 12/603,340	**: PROSECUTION HIGHWAY**
Filed: 21 October 2009	**: PROGRAM AND PETITION**
Attorney Docket No.: 239224 GECZ 201045US01	**: TO MAKE SPECIAL UNDER**
For: HIGH EFFICIENCY LOW POWER CAPACITOR CHARGED DC DRIVER	**: 37 CFR 1.102(a)**

This is a decision on the request to participate in the PCT Patent Prosecution Highway (PCT-PPH) pilot program and the petition under 37 CFR 1.102(a), filed 30 November 2010, to make the above-identified application special.

The request and petition are **DISMISSED**.

Discussion

A grantable request to participate in the PCT-PPH pilot program and petition to make special require:

(1) The U.S. application must have an eligible relationship to one or more PCT applications where the ISA or IPEA are the JPO, EPO, KIPO, or USPTO;

(2) At least one claim in the PCT application has novelty, inventive step, and industrial applicability and must be free of any observations in Box VIII in the latest work product in the international stage or applicant must identify and explain why the claim(s) is/are not subject to the observation in Box VIII;

(3) Applicant must submit a copy of the claim(s) from the PCT application(s) that have novelty, inventive step, and industrial applicability along with an English translation thereof and a statement that the English translation is accurate, if the claims are not in the English language;

(4) All the claims in the U.S. application must sufficiently correspond or be amended to sufficiently correspond to the claim(s) that have novelty, inventive step, and industrial applicability in the PCT application(s);

(5) Examination of the U.S. application has not begun;

(6) Applicant must submit a copy of the latest international work product from the PCT application indicating that the claim(s) have novelty, inventive step, and industrial applicability along with an English translation thereof and a statement that the English translation is accurate if the latest international work product is not in the English language;

(7) Applicant must submit an IDS listing the documents cited by the PCT examiner in the international work product along with copies of documents except U.S. patents or U.S. patent application publications.

Conditions (1-5), and (7) above are considered to have been met. However, the request to participate in the PPH pilot program and petition fails meet condition (6).

Regarding the requirement of condition (6), the request for participation in the PCT-PPH indicated that the latest international work product had already been submitted. However, only the International Search Report (ISA 210) is present in the file. The Written Opinion (ISA 237) is not in the file.

Applicant is given **ONE** opportunity within a time period of **ONE MONTH or THIRTY DAYS**, whichever is longer, from the mailing date of this decision to correct the deficiencies. **NO EXTENSION OF TIME UNDER 37 CFR 1.136 IS PERMITTED.** If the deficiencies are not corrected with the time period given, the application will await action in its regular turn.

Response must be filed via the Electronic Filing System (EFS) using the document description: Petition to make special under PCT – Patent Pros Hwy. Any preliminary amendments and IDS submitted with the PPH documents must be separately indexed as a preliminary amendment and IDS, respectively.

Telephone inquiries concerning this decision should be directed to Lee W. Young at 571-272-4549.

All other inquiries concerning the examination or status of the application is accessible in the PAIR system at http://www.uspto.gov/ebc/index.html.

Lee W. Young
TQAS Technology Center 2800 - Semiconductors,
Electrical & Optical Systems & Components

PTO/SB/20PCT-US (09-10)
Approved for use through 01/31/2012. OMB 0651-0058
U.S. Patent and Trademark Office; U. S. DEPARTMENT OF COMMERCE
Under the Paperwork Reduction Act of 1995, no persons are required to respond to a collection of information unless it displays a valid OMB control number.

REQUEST FOR PARTICIPATION IN THE PATENT COOPERATION TREATY - PATENT PROSECUTION HIGHWAY (PCT-PPH) PILOT PROGRAM IN A U.S. APPLICATION WHERE THE USPTO WAS THE ISA OR IPEA

Application No:	12/603340	Filing date:	2009-10-21
First Named Inventor:	Bruce Richard Roberts, et al		
Title of the Invention:	HIGH EFFICIENCY LOW POWER CAPACITOR CHARGED DC DRIVER		

THIS REQUEST FOR PARTICIPATION IN THE PCT-PPH PILOT PROGRAM ALONG WITH THE REQUIRED DOCUMENTS MUST BE SUBMITTED VIA EFS-WEB. INFORMATION REGARDING EFS-WEB IS AVAILABLE AT HTTP://WWW.USPTO.GOV/EBC/EFS_HELP.HTML

APPLICANT HEREBY REQUESTS PARTICIPATION IN THE PCT-PPH PROGRAM AND PETITIONS TO MAKE THE ABOVE-IDENTIFIED APPLICATION SPECIAL UNDER THE PCT-PPH PROGRAM.

The above-identified application is (1) a national stage entry of the corresponding PCT application, or (2) a national stage entry of another PCT application which claims priority to the corresponding PCT application, or (3) a national application that claims domestic/ foreign priority to the corresponding PCT application, or (4) a national application which forms the basis for the priority claim in the corresponding PCT application, or (5) a continuing application of a U.S. application that satisfies one of (1) to (4) above, or (6) a U.S. application that claims domestic benefit to a U.S. provisional application which forms the basis for the priority claim in the corresponding PCT application.

The corresponding PCT application number(s) is/are: US10/45017

The international date of the corresponding PCT application(s) is/are: 2010-08-10

I. List of Required Documents:

a. **A copy of the latest international work product (WO/ISA, WO/IPEA, or IPER) in the above–identified corresponding PCT application(s)**

- [x] Is attached
- [ ] Is not attached because the document is already in the U.S. application.

b. **A copy of all claims which were indicated as having novelty, inventive step and industrial applicability in the above-identified corresponding PCT application(s).**

- [ ] Is attached.
- [x] Is not attached because the document is already in the U.S. application.

c. **English translations of the documents in a. and b. above are attached (if the documents are not in the English language). A statement that the English translation is accurate is attached for the document in b. above.**

This collection of information is required by 35 U.S.C. 119, 37 CFR 1.55, and 37 CFR 1.102(d). The information is required to obtain or retain a benefit by the public, which is to file (and by the USPTO to process) an application. Confidentiality is governed by 35 U.S.C. 122 and 37 CFR 1.11 and 1.14. This collection is estimated to take 2 hours to complete, including gathering, preparing, and submitting the completed application form to the USPTO. Time will vary depending upon the individual case. Any comments on the amount of time you require to complete this form and/or suggestions for reducing this burden should be sent to the Chief Information Officer, U.S. Patent and Trademark Office, U.S. Department of Commerce, P.O. Box 1450, Alexandria, VA 22313-1450. DO NOT SEND FEES OR COMPLETED FORMS TO THIS ADDRESS.

Under the Paperwork Reduction Act of 1995, no persons are required to respond to a collection of information unless it displays a valid OMB control number.

REQUEST FOR PARTICIPATION IN THE PCT-PPH PILOT PROGRAM IN A U.S. APPLICATION WHERE THE USPTO WAS THE ISA OR IPEA (continued)

Application No.:	12/603340
First Named Inventor:	Bruce Richard Roberts, et al

d. **(1) An information disclosure statement listing the documents cited in the international work products (ISR, WO/ISA, WO/IPEA, IPER) of the corresponding PCT application.**

☐ Is attached

☒ Has already been filed in the above-identified U.S. application on November 29, 2010

(2) Copies of all documents (except) for U.S. patents or U.S. patent application publications)

☐ Are attached.

☒ Have already been filed in the above-identified U.S. application on November 29, 2010

II. Claims Correspondence Table:

Claims in US Application	Patentable Claims in the corresponding PCT Application	Explanation regarding the correspondence
1-16		Claims 1 to 16 of PCT/US2010/45017 correspond to US claims
		1-16 submitted on 2009-10-21

III. All the claims in the US application sufficiently correspond to the patentable claims in the corresponding PCT application.

Signature /ptd47323/	Date 2011-01-18
Name (Print/Typed) Peter T. DiMauro	Registration Number 47,323

Privacy Act Statement

The **Privacy Act of 1974 (P.L. 93-579)** requires that you be given certain information in connection with your submission of the attached form related to a patent application or patent. Accordingly, pursuant to the requirements of the Act, please be advised that: (1) the general authority for the collection of this information is 35 U.S.C. 2(b)(2); (2) furnishing of the information solicited is voluntary; and (3) the principal purpose for which the information is used by the U.S. Patent and Trademark Office is to process and/or examine your submission related to a patent application or patent. If you do not furnish the requested information, the U.S. Patent and Trademark Office may not be able to process and/or examine your submission, which may result in termination of proceedings or abandonment of the application or expiration of the patent.

The information provided by you in this form will be subject to the following routine uses:

1. The information on this form will be treated confidentially to the extent allowed under the Freedom of Information Act (5 U.S.C. 552) and the Privacy Act (5 U.S.C 552a). Records from this system of records may be disclosed to the Department of Justice to determine whether disclosure of these records is required by the Freedom of Information Act.
2. A record from this system of records may be disclosed, as a routine use, in the course of presenting evidence to a court, magistrate, or administrative tribunal, including disclosures to opposing counsel in the course of settlement negotiations.
3. A record in this system of records may be disclosed, as a routine use, to a Member of Congress submitting a request involving an individual, to whom the record pertains, when the individual has requested assistance from the Member with respect to the subject matter of the record.
4. A record in this system of records may be disclosed, as a routine use, to a contractor of the Agency having need for the information in order to perform a contract. Recipients of information shall be required to comply with the requirements of the Privacy Act of 1974, as amended, pursuant to 5 U.S.C. 552a(m).
5. A record related to an International Application filed under the Patent Cooperation Treaty in this system of records may be disclosed, as a routine use, to the International Bureau of the World Intellectual Property Organization, pursuant to the Patent Cooperation Treaty.
6. A record in this system of records may be disclosed, as a routine use, to another federal agency for purposes of National Security review (35 U.S.C. 181) and for review pursuant to the Atomic Energy Act (42 U.S.C. 218(c)).
7. A record from this system of records may be disclosed, as a routine use, to the Administrator, General Services, or his/her designee, during an inspection of records conducted by GSA as part of that agency's responsibility to recommend improvements in records management practices and programs, under authority of 44 U.S.C. 2904 and 2906. Such disclosure shall be made in accordance with the GSA regulations governing inspection of records for this purpose, and any other relevant (*i.e.*, GSA or Commerce) directive. Such disclosure shall not be used to make determinations about individuals.
8. A record from this system of records may be disclosed, as a routine use, to the public after either publication of the application pursuant to 35 U.S.C. 122(b) or issuance of a patent pursuant to 35 U.S.C. 151. Further, a record may be disclosed, subject to the limitations of 37 CFR 1.14, as a routine use, to the public if the record was filed in an application which became abandoned or in which the proceedings were terminated and which application is referenced by either a published application, an application open to public inspection or an issued patent.
9. A record from this system of records may be disclosed, as a routine use, to a Federal, State, or local law enforcement agency, if the USPTO becomes aware of a violation or potential violation of law or regulation.

UNITED STATES PATENT AND TRADEMARK OFFICE

UNITED STATES DEPARTMENT OF COMMERCE
United States Patent and Trademark Office
Address: COMMISSIONER FOR PATENTS
P.O. Box 1450
Alexandria, Virginia 22313-1450
www.uspto.gov

APPLICATION NO.	FILING DATE	FIRST NAMED INVENTOR	ATTORNEY DOCKET NO.	CONFIRMATION NO.
12/603,340	10/21/2009	Bruce Richard Roberts	239224 GECZ 201045US01	6343

27885 7590 02/02/2011
FAY SHARPE LLP
1228 Euclid Avenue, 5th Floor
The Halle Building
Cleveland, OH 44115

EXAMINER

ART UNIT	PAPER NUMBER
2821	

MAIL DATE	DELIVERY MODE
02/02/2011	PAPER

Please find below and/or attached an Office communication concerning this application or proceeding.

The time period for reply, if any, is set in the attached communication.

UNITED STATES PATENT AND TRADEMARK OFFICE

Commissioner for Patents
United States Patent and Trademark Office
P.O. Box 1450
Alexandria, VA 22313-1450
www.uspto.gov

FAY SHARPE LLP
1228 Euclid Avenue, 5th Floor
The Halle Building
Cleveland OH 44115

In re Application of	**: DECISION ON REQUEST TO**
ROBERTS et al.	**: PARTICIPATE IN THE PATENT**
Application No.: 12/603,340	**: PROSECUTION HIGHWAY**
Filed: 21 October 2009	**: PROGRAM AND PETITION**
Attorney Docket No.: 239224 GECZ 201045US01	**: TO MAKE SPECIAL UNDER**
For: HIGH EFFICIENCY LOW POWER CAPACITOR CHARGED DC DRIVER	**: 37 CFR 1.102(a)**

This is a decision on the request to participate in the PCT Patent Prosecution Highway (PCT-PPH) pilot program and the petition under 37 CFR 1.102(a), filed 30 November 2010 and renewed on 19 January 2011, to make the above-identified application special.

The request and petition are **GRANTED**.

Discussion

A grantable request to participate in the PCT-PPH pilot program and petition to make special require:

(1) The U.S. application must disclose an eligible relationship to one or more PCT applications where the ISA or IPEA are the JPO, EPO, KIPO, or USPTO;

(2) At least one claim in the PCT application has novelty, inventive step, and industrial applicability and must be free of any observations in Box VIII in the latest work product in the international stage or applicant must identify and explain why the claim(s) is/are not subject to the observation in Box VIII;

(3) Applicant must submit a copy of the claim(s) from the PCT application(s) that have novelty, inventive step, and industrial applicability along with an English translation thereof and a statement that the English translation is accurate, if the claims are not in the English language;

(4) All the claims in the U.S. application must sufficiently correspond or be amended to sufficiently correspond to the claim(s) that have novelty, inventive step, and industrial applicability in the PCT application(s);

(5) Examination of the U.S. application has not begun;

(6) Applicant must submit a copy of the latest international work product from the PCT application indicating that the claim(s) have novelty, inventive step, and industrial applicability along with an English translation thereof and a statement that the English translation is accurate if the latest international work product is not in the English language;

(7) Applicant must submit an IDS listing the documents cited by the PCT examiner in the international work product along with copies of documents except U.S. patents or U.S. patent application publications.

The request to participate in the PCT-PPH pilot program and petition comply with the above requirements. Accordingly, the above-identified application has been accorded "special" status.

Telephone inquiries concerning this decision should be directed to Lee W. Young at 571-272-4549.

All other inquiries concerning the examination or status of the application is accessible in the PAIR system at http://www.uspto.gov/ebc.index.html.

This application will be forwarded to the examiner for action on the merits commensurate with this decision once this application's formality reviews have been completed.

Lee W. Young
TQAS Technology Center 2800 - Semiconductors,
Electrical & Optical Systems & Components

UNITED STATES PATENT AND TRADEMARK OFFICE

Commissioner for Patents
United States Patent and Trademark Office
P.O. Box 1450
Alexandria, VA 22313-1450
www.uspto.gov

MAILED

SEP 10 2010

OFFICE OF PETITIONS

GOODWIN PROCTER LLP
PATENT ADMINISTRATOR
53 STATE STREET
EXCHANGE PLACE
BOSTON MA 02109-2881

In re Application of	:	
Thomas Wickham et al	:	DECISION GRANTING STATUS
Application No. 12/603,363	:	UNDER 37 CFR 1.47(a)
Filed: October 21, 2009	:	
Attorney Docket No. LEX-044	:	

This is in response to the petition under 37 CFR 1.47(a), filed June 9, 2010.

The petition is **GRANTED.**

Petitioner has shown that the non-signing inventor has refused to join in the filing of the above-identified application.

The application and papers have been reviewed and found in compliance with 37 CFR 1.47(a). This application is hereby accorded Rule 1.47(a) status.

As provided in 37 CFR 1.47(c), this Office will forward notice of this application's filing to the non-signing inventor at the address given in the petition. Notice of the filing of this application will also be published in the Official Gazette.

This application is being referred to the Office of Patent Application Processing for pre-examination processing.

Telephone inquiries regarding this decision should be directed to the undersigned at (571) 272-3208.

/KOC/
Karen Creasy
Petitions Examiner
Office of Petitions

Doc Code: PET.AUTO **Document Description: Petition automatically granted by EFS-Web**	PTO/SB/83 U.S. Patent and Trademark Office Department of Commerce

Electronic Petition Request	**REQUEST FOR WITHDRAWAL AS ATTORNEY OR AGENT AND CHANGE OF CORRESPONDENCE ADDRESS**
Application Number	12603372
Filing Date	21-Oct-2009
First Named Inventor	Matthew Olson
Art Unit	1653
Examiner Name	NATALIE MOSS
Attorney Docket Number	026038.0236PTUS
Title	HIGH-THROUGHPUT ASSAY FOR EVALUATING DIPEPTIDYL PEPTIDASE I ACTIVITY

◉ Please withdraw me as attorney or agent for the above identified patent application and the practitioners of record associated with Customer Number: 32042

The reason(s) for this request are those described in 37 CFR:

10.40(b)(4)

10.40(c)(5)

Certifications

☒ I/We have given reasonable notice to the client, prior to the expiration of the response period, that the practitioner(s) intend to withdraw from employment

☒ I/We have delivered to the client or a duly authorized representative of the client all papers and property (including funds) to which the client is entitled

☒ I/We have notified the client of any responses that may be due and the time frame within which the client must respond

Change the correspondence address and direct all future correspondence to:
The address of the first named inventor or assignee that has properly made itself of record pursuant to 37 CFR 3.71, associated with Customer Number: 27777

I am authorized to sign on behalf of myself and all withdrawing practitioners.

Signature	/Scott A. Chambers/
Name	Scott A. Chambers
Registration Number	37573

UNITED STATES PATENT AND TRADEMARK OFFICE

Commissioner for Patents
United States Patent and Trademark Office
P.O. Box 1450
Alexandria, VA 22313-1450
www.uspto.gov

Decision Date : February 14, 2012

In re Application of :

Matthew Olson

Application No : 12603372

Filed : 21-Oct-2009

Attorney Docket No : 026038.0236PTUS

DECISION ON REQUEST TO WITHDRAW AS ATTORNEY/AGENTOF RECORD

This is an electronic decision on the Request to Withdraw as attorney or agent of record under 37 CFR§ 1.36(b), filed February 14, 2012

The request is **APPROVED**

The request was signed by Scott A. Chambers (registration no. 37573) on behalf of all attorneys/agents associated with Customer Number 32042 . All attorneys/agents associated with Customer Number 32042 have been withdrawn.

Since there are no remaining attorneys of record, all future communications from the Office will be directed to the first named inventor or assignee that has properly made itself of record pursuant to 37 CFR 3.71, with Customer number 27777 .

As a reminder, requester is required to inform the first named inventor or assignee that has properly made itself of record pursuant to 37 CFR 3.71 of the electronically processed petition.

Telephone inquiries concerning this decision should be directed to the Patent Electronic Business Center (EBC) at 866-217-9197.

Office of Petitions

Doc Code: PET.GREEN
Document Description: Petition for Green Tech Pilot

PTO/SB/420 (03-11)

PETITION TO MAKE SPECIAL UNDER THE GREEN TECHNOLOGY PILOT PROGRAM

Attorney Docket Number: 13027-0002	Application Number (if known): 12/603383	Filing date: October 21, 2009

First Named Inventor: Vic Randazzo

Title: GAS-LIFT VALVE AND METHOD OF USE

APPLICANT HEREBY REQUESTS TO PARTICIPATE IN THE GREEN TECHNOLOGY PILOT PROGRAM FOR THE ABOVE-IDENTIFIED APPLICATION. See Instruction Sheet on page 2.

This petition must be timely filed electronically using the USPTO electronic filing system, EFS-Web.

1. By filing this petition:

   Applicant is requesting early publication: Applicant hereby requests early publication under 37 CFR 1.219 and the publication fee set forth in 37 CFR 1.18(d) accompanies this request.

2. By filing this petition: applicant is agreeing to make an election without traverse in a telephonic interview and elect an invention that meets the eligibility requirements for the Green Technology Pilot Program, if the Office determines that the claims are not obviously directed to a single invention. See Instruction Sheet.

3. This request is accompanied by statements of special status for the eligibility requirement.

4. The application contains no more than three (3) independent claims and twenty (20) total claims.

5. The application does not contain any multiple dependent claims.

6. Other attachments: Statement to Support Petition

Signature //William F. Nixon//	Date June 2, 2011
Name (Print/Typed) William F. Nixon	Registration Number 44, 262

***Note**: Signatures of all the inventors or assignees of record of the entire interest or their representative(s) are required in accordance with 37 CFR 1.33 and 11.18. Please see 37 CFR 1.4(d) for the form of the signature. If necessary, submit multiple forms for more than one signature, see below*.*

☐ *Total of _____ forms are submitted.

If you need assistance in completing the form, call 1-800-PTO-9199 and select option 2.

IN THE UNITED STATES PATENT AND TRADEMARK OFFICE

Group art unit: 3672
Examiner: Richard Alker
Conf. number: 6409

In Re PATENT APPLICATION of:

Inventor(s):	Vic Randazzo	)
		)
Serial No.:	12/603,383	)
		)
Filing date:	October 21, 2009	)
		)
For:	GAS-LIFT VALVE AND METHOD OF USE	)
		)
		)
Atty. ref.:	13027-0002	)_____
		June 2, 2011

STATEMENT TO SUPPORT PETITION TO MAKE SPECIAL UNDER THE GREEN TECHNOLOGY PILOT PROGRAM

Commissioner for Patents
P.O. Box 1450
Alexandria, VA 22313-1450

Sir:

In support of the attached Petition to Make Special, Applicant provides the following statement in support of the Petition.

STATEMENT

Applicant submits the attached Petition to make special under the Green Technology Program. Applicant also submits that the gas-lift valve and its method of use qualify for the Green Technology Program because the claimed invention materially contributes to the more efficient utilization and conservation of energy resources. Use of the gas-lift valve allows for the injection gas to be injected upward rather than downward. This effect increases the efficiency of retrieving oil and gas from existing wells, even those that are considered empty.

The upward injection of gas from the gas-lift valve reduces the eddying effect on the fluids that occur in the use of conventional gas-lift valves. Thus, the gas-lifted well using the disclosed gas-lift valve acts as if flowing on its own. This feature enables otherwise low or empty wells to be exploited for further gas and oil resources, and prevents the need to drill for more wells. The increase of production in these low or empty wells of unrealized oil and gas contributes to the utilization of existing resources and reduces costs incurred from finding new resources. As noted in the specification, testing has shown that as much as a 40% increase of oil and gas production may be realized with the disclosed gas-lift valve.

The disclosed gas-lift valve includes a body, a gas-charged dome and bellows within the body to manipulate a valve stem and an attached valve ball to be on and off a valve seat. The bellows collapses to move the dome downward when a combination of the casing pressure from the inlet ports of the gas-lift valve and the tubing pressure on the

valve seat reaches or exceeds the nitrogen gas charge within the dome and the bellows. The collapse of the bellows causes the valve ball to disengage the valve seat which allows gas to flow through the port and upward through the check valve located in the upper portion of the gas-lift valve. The injection gas flows upward through the attached latch to exit the gas-lift valve through the top of the latch.

The redirection of the injection gas means it flows upward with the natural flow of the well, which increases production from the well by adding drawdown to the formation. Further, the redirection upwards with the natural flow reduces the stress on the whole system. Thus, oil and gas production increases and wells are more efficiently utilized due to the gas-lift valve.

Applicant submits that the present application meets the requirements for the Green Technology Program, and respectfully requests that the Petition be granted.

Applicant also attaches payment of the appropriate fee in support of the Petition. The Office is invited to contact the undersigned with regard to this Petition or prosecution of the present application.

Respectfully submitted,

//William F. Nixon//

June 2, 2011
Date

William F. Nixon
Reg. No. 44,262
NIXON IP LAW, PLC
Customer No. 85057
Telephone: (703) 909-3458
Fax: (202) 330-5005

WFN/noe

UNITED STATES PATENT AND TRADEMARK OFFICE

UNITED STATES DEPARTMENT OF COMMERCE
United States Patent and Trademark Office
Address: COMMISSIONER FOR PATENTS
P.O. Box 1450
Alexandria, Virginia 22313-1450
www.uspto.gov

APPLICATION NO.	FILING DATE	FIRST NAMED INVENTOR	ATTORNEY DOCKET NO.	CONFIRMATION NO.
12/603,383	10/21/2009	Vic Arthur Randazzo	13027-0002	6409

85057 7590 06/07/2011
NIXON IP LAW, PLC
P.O. BOX 7637
Falls Church, VA 22040

EXAMINER
ALKER, RICHARD

ART UNIT	PAPER NUMBER
3672	

MAIL DATE	DELIVERY MODE
06/07/2011	PAPER

Please find below and/or attached an Office communication concerning this application or proceeding.

The time period for reply, if any, is set in the attached communication.

UNITED STATES PATENT AND TRADEMARK OFFICE

Commissioner for Patents
United States Patent and Trademark Office
P.O. Box 1450
Alexandria, VA 22313-1450
www.uspto.gov

JUN 07 2011

NIXON IP LAW, PLC
P.O. BOX 7637
Falls Church VA 22040

In re Application of	:	
VIC RANDAZZO	:	DECISION ON PETITION
Application No. 12/603,383	:	TO MAKE SPECIAL UNDER
Filed: October 21, 2009	:	THE GREEN TECHNOLOGY
Attorney Docket No. 13027-0002	:	PILOT PROGRAM

This is a decision on the petition under 37 CFR 1.102, filed June 2, 2011, to make the above-identified application special under the pilot program for applications pertaining to Green Technologies as set forth in 74 Federal Register Notice 64666 (December 8, 2009) and amended by 75 Federal Register Notice 28554 (May 21, 2010) and 75 Federal Register Notice 69049 (November 10, 2010).

The petition is **DISMISSED**.

If reconsideration of this decision is desired, a petition for reconsideration must be filed within ONE (1) MONTH OR THIRTY (30) DAYS from the mail date of this decision, whichever is longer. No extension of this time limit can be granted under 37 CFR 1.136(a) or (b). The petition for reconsideration should include an exhaustive attempt to provide the lacking item(s) noted below, since, after a decision on the petition for reconsideration, no further reconsideration or review of the matter will be undertaken by the Director.

A grantable petition to make an application special under 37 CFR 1.102 and the pilot program as set forth in 74 FR 64666 must be directed to a nonprovisional application filed under 35 USC 111(a) or be a national stage entry under 35 USC 371, exclusive of any reissue applications.

In order to qualify for special status, the following requirements must be met. 1) The application must have no more than 3 independent claims and no more than 20 total claims. 2) The application must not contain any multiple dependent claims. 3) The petition must state the basis for seeking special status, i.e., the claimed invention either: A) materially enhances the quality of the environment or B) materially contributes to: i) the discovery or development of renewable energy resources, ii) the more efficient utilization and conservation of energy resources, or iii) greenhouse gas emission reduction. 4) If the disclosure is not clear on its face that the claimed invention materially contributes under category (A) or (B), the petition must be accompanied by a statement by the applicant, assignee, or an attorney/agent registered to practice before the Office explaining how the materiality standard is met. 5) A statement that applicant will agree to

make an election without traverse in a telephonic interview if a restriction requirement is made by the examiner. 6) The petition to make special must be filed electronically. 7) The petition must be filed at least one day prior to the date that a first Office Action appears in the Patent Application Information Retrieval (PAIR) system. 8) The petition must be accompanied by a request for early publication in compliance with 37 CFR 1.219 and include the publication fee as set forth in 37 CFR 1.18(d).

The requirement for a fee for consideration of the petition to make special for applications pertaining to Green Technologies has been waived.

The petition lacks item(s) 4.

In regard to item 4, petitioner asserts that *"the gas-lifted well using the disclosed gas-lift valve acts as if flowing on its own. This feature enables otherwise low or empty wells to be exploited for further gas and oil resources, and prevents the need to drill for more wells. The increase of production in these low or empty wells of unrealized oil and gas contributes to the utilization of existing resources and reduces costs incurred from finding new resources."* This statement is merely a speculation on how the instant invention can be used to materially contribute to the more efficient utilization and conservation of energy resources. The claimed apparatus and method requires energy to drive a compressor to raise the pressure of the gas to a level where it can be re-injected. If energy is needed to operate a compressor, then the claimed invention does not conserve energy resources. The claimed apparatus/method also requires an abundant supply of gas to be stored at the surface, which is a fire hazard. Gas that is separated and vented is not easily retained for re-injection, and gas that is re-injected rapidly becomes contaminated with oxygen, carbon monoxide and hydrogen sulphide that can corrode production string components. The injected gas can leak out from the wellbore to potentially contaminate a potable groundwater aquifer or river system in the surrounding strata. The gas lift apparatus/method produces large quantities of brine at the surface. The brine may contain toxic metals and radioactive substances, as well as being very salty. This can be very damaging to drinking water sources and the environment upon disposal. In addition, the availability of more oil for the world made possible by the gas lift process in itself raises global emissions of CO_2.

As stated in the notice, the materiality standard does not permit an applicant to speculate as to how a hypothetical end-user might specially apply the invention in a manner than could materially contribute to category (A) or (B). *Also see MPEP § 708.02 (VI).* Accordingly, it is not agreed that the application on its face meets that materiality standard.

Any reconsideration of this decision should be submitted through the USPTO electronic filing system, EFS-Web, and selecting the document description of "Petition for Green Tech Pilot" on the EFS-Web screen.

Telephone inquiries concerning this decision should be directed to Lanna Mai at 571-272-6867.

The application is being forwarded to the Technology Center Art Unit 3672 for action in its regular turn.

/Lanna Mai/

Lanna Mai
Quality Assurance Specialist
Technology Center 3600

UNITED STATES PATENT AND TRADEMARK OFFICE

Commissioner for Patents
United States Patent and Trademark Office
P.O. Box 1450
Alexandria, VA 22313-1450
www.uspto.gov

MAILED

JUN 02 2011

OFFICE OF PETITIONS

LADAS & PARRY
5670 WILSHIRE BOULEVARD, SUITE 2100
LOS ANGELES CA 90036-5679

In re Application of :
Michael G. Fisher et al. :
Application No. 12/603,396 :
Filed: October 21, 2009 :
Attorney Docket No. **B-6597 625280-9** :

DECISION ON PETITION
TO WITHDRAW
FROM RECORD

This is a decision on the request to withdraw as attorney of record under 37 CFR § 1.36(b), filed May 20, 2011.

The request is **NOT APPROVED**.

The request cannot be approved because it lacks the name of the first inventor or the assignee of record that is associated with the address listed in the request. Therefore, the change of correspondence address is considered improper.

I would like to bring to petitioner attention that the Office no longer accepts address changes to a new practitioner/customer number or law firm absent the filing of a power of attorney to the new representative.

The Office will only accept correspondence address changes to the most current address information provided for the assignee of the entire interest *who properly became of record under 37 CFR 3.71,* or, if no assignee of the entire interest has properly been made of record, the most current address information provided for the first named inventor. 37 CFR 3.71(c) states:

> *An assignee becomes of record either in a national patent application or a reexamination proceeding by filing a statement in compliance with § 3.73(b) that is signed by a party who is authorized to act on behalf of the assignee.*

The assignee must establish its ownership of the patent to the satisfaction of the Director. In this regard, the statement under 37 CFR 3.73(b) must have either: (i) documentary evidence of a chain of title from the original owner to the assignee (*e.g.*, copy of an executed assignment), and a statement affirming that the documentary evidence of the chain of title from the original owner to the assignee was or concurrently is being submitted for recordation pursuant to § 3.11; or (ii) a statement specifying where documentary evidence of a chain of title from the original owner to the assignee is recorded in the assignment records of the Office (*e.g.*, reel and frame number).

All future communications from the Office will continue to be directed to the above-listed address until otherwise notified by applicant.

Telephone inquires concerning this decision should be directed to the undersigned at (571) 272-4584.

JoAnne Burke
Petitions Examiner
Office of Petitions

UNITED STATES PATENT AND TRADEMARK OFFICE

UNITED STATES DEPARTMENT OF COMMERCE
United States Patent and Trademark Office
Address: COMMISSIONER FOR PATENTS
P.O. Box 1450
Alexandria, Virginia 22313-1450
www.uspto.gov

APPLICATION NO.	FILING DATE	FIRST NAMED INVENTOR	ATTORNEY DOCKET NO.	CONFIRMATION NO.
12/603,442	10/21/2009	Seung-Jae LEE	0630-4015PUS1	6529

2292 7590 04/20/2011
BIRCH STEWART KOLASCH & BIRCH
PO BOX 747
FALLS CHURCH, VA 22040-0747

EXAMINER

ART UNIT	PAPER NUMBER
2431	

NOTIFICATION DATE	DELIVERY MODE
04/20/2011	ELECTRONIC

Please find below and/or attached an Office communication concerning this application or proceeding.

The time period for reply, if any, is set in the attached communication.

Notice of the Office communication was sent electronically on above-indicated "Notification Date" to the following e-mail address(es):

mailroom@bskb.com

UNITED STATES PATENT AND TRADEMARK OFFICE

Commissioner for Patents
United States Patent and Trademark Office
P.O. Box 1450
Alexandria, VA 22313-1450
www.uspto.gov

MAILED

APR 19 2011

DIRECTOR OFFICE
TECHNOLOGY CENTER 2400

BIRCH STEWART KOLASCH & BIRCH
PO BOX 747
FALLS CHURCH VA 22040-0747

In re Application of: Seung-Jae LEE.
Application No. 12/603,442
Filed: Oct 21, 2009
For: METHOD FOR MOVING RIGHTS OBJECTS INTO OTHER DEVICE IN DIGITAL RIGHTS MANAGEMENT

DECISION ON REQUEST TO PARTICIPATE IN PATENT PROSECUTION HIGHWAY PILOT PROGRAM AND PETITION TO MAKE SPECIAL UNDER 37 CFR 1.102(d)

This is a decision on the request to participate in the Patent Prosecution Highway (PPH) program and the petition under 37 CFR 1.102(d), filed April 12, 2011, to make the above-identified application special.

The request and petition are **GRANTED**.

A grantable request to participate in the PPH program and petition to make special require:

(1) The U.S. application is
(a) a Paris Convention application which either
(i) validly claims priority under 35 U.S.C. 119(a) and 37 CFR 1.55 to one or more applications filed in the KIPO, or
(ii) validly claims priority to a PCT application that contains no priority claims,

Or

(b) a national stage application under the PCT (an application which entered the national stage in the U.S. from a PCT international application after compliance with 35 U.S.C. 371), which PCT application
(i) validly claims priority to an application filed in the KIPO, or
(ii) validly claims priority to a PCT application that contains no priority claims, or
(iii) contains no priority claim,

Or

(c) a so-called bypass application filed under 35 U.S.C. 111 (a) which validly claims benefit under 35 U.S.C. 120 to a PCT application, which PCT application
(i) validly claims priority to an application filed in the KIPO, or

(ii) validly claims priority to a PCT application that contains no priority claims, or
(iii) contains no priority claim.

Where the KIPO application that contains the allowable/patentable claims is not the same application for which priority is claimed in the U.S. application, applicant must identify the relationship between the KIPO application that contains the allowable/patentable claims and the KIPO priority application claimed in the U.S. application.

(2) Applicant must submit a copy of:
a. The allowable/patentable claim(s) from the KIPO application(s) or if a copy of the allowable/patentable claims is available via the Dossier Access System (DAS) applicant may request the USPTO obtain a copy from the DAS, however if the USPTO is unable to obtain a copy from the DAS the applicant will be required to submit a copy;
b. An English translation of the allowable/patentable claim(s) and
c. A statement that the English translation is accurate;

(3) Applicant must:
a. Ensure all the claims in the U.S. application must sufficiently correspond or be amended to sufficiently correspond to the allowable/patentable claim(s) in the KIPO application(s) and
b. Submit a claims correspondence table in English;

(4) Examination of the U.S. application has not begun;

(5) Applicant must submit:
a. Documentation of prior office action:
i. a copy of the office action(s)just prior to the "Decision to Grant a Patent" from each of the KIPO application(s) containing the allowable/patentable claim(s) or
ii. if the allowable/patentable claims(s) are from a "Notification of Reasons for Refusal" then the Notification of Reasons for Refusal or
iii. if the KIPO application is a first action allowance then no office action from
the KIPO is necessary should be indicated on the request/petition form;

Further, if a copy of the documents from a or b above is available via the Dossier Access System (DAS) applicant may request the USPTO obtain a copy from the DAS, however if the USPTO is unable to obtain a copy from the DAS the applicant will be required to submit a copy; b. An English language translation of the KIPO Office action from (5)(a)(i)-(ii) above c. A statement that the English translation is accurate;

(6) Applicant must submit:
a. An IDS listing the documents cited by the KIPO examiner in the KIPO office action (unless already submitted in this application)

b. Copies of the documents except U.S. patents or U.S. patent application publications (unless already submitted in this application);

The request to participate in the PPH pilot program and petition are found to comply with the above requirements. Accordingly, the above-identified application has been accorded "special" status.

Telephone inquiries concerning this decision should be directed to Kim Huynh at 571-272-4147

All other inquiries concerning the examination or status of the application is accessible in the PAIR system at http://www.uspto.gov/ebc/index.html.

/Kim Huynh/

Kim Huynh
Quality Assurance Specialist
Technology Center 2400

UNITED STATES PATENT AND TRADEMARK OFFICE

Commissioner for Patents
United States Patent and Trademark Office
P.O. Box 1450
Alexandria, VA 22313-1450
www.uspto.gov

MAILED
FEB 21 2012
OFFICE OF PETITIONS

MARLAN D. WALKER
2050 MAIN STREET, SUITE 600
IRVINE CA 92614

In re Application of	:	
GOLD, et al	:	
Application No. 12/603,507	:	DECISION ON PETITION
Filed: October 21, 2009	:	TO WITHDRAW
Attorney Docket No. 38402-20701	:	FROM RECORD
	:	

This is a decision on the Request to Withdraw as attorney or agent of record under 37 C.F.R. § 1.36(b), filed January 24, 2011.

The request is **NOT APPROVED because it is moot.**

A review of the file record indicates that a declaration and power of attorney was filed February 13, 2012, which appointed the attorneys associated with Customer Number 30734. Accordingly, the request to withdraw under 37 C.F.R. § 1.36(b) filed January 24, 2011, is moot.

All future communications from the Office will be directed to the address first copied below until otherwise properly notified by the applicant.

Telephone inquiries concerning this decision should be directed to undersigned at (571) 272-6735.

/Diane Goodwyn/
Diane Goodwyn
Petitions Examiner
Office of Petitions

cc: BAKER & HOSTETLER, LLP
WASHINGTON SQUARE, SUITE 1100
1050 CONNECTICUT AVENUE NW
WASHINGTON, DC 20036

cc: MARK H. KRIETMAN
C/O THE ECLIPSE GROUP
SUITE 150
1920 MAIN STREET
IRVINE, CA 92614

UNITED STATES PATENT AND TRADEMARK OFFICE

UNITED STATES DEPARTMENT OF COMMERCE
United States Patent and Trademark Office
Address: COMMISSIONER FOR PATENTS
P.O. Box 1450
Alexandria, Virginia 22313-1450
www.uspto.gov

APPLICATION NUMBER	FILING OR 371(C) DATE	FIRST NAMED APPLICANT	ATTY. DOCKET NO./TITLE
12/603,507	10/21/2009	Kenneth Stewart Gold	38402-20701

CONFIRMATION NO. 6656

POA ACCEPTANCE LETTER

30734
BAKER & HOSTETLER LLP
WASHINGTON SQUARE, SUITE 1100
1050 CONNECTICUT AVE. N.W.
WASHINGTON, DC 20036-5304

OC000000052653879

Date Mailed: 02/17/2012

NOTICE OF ACCEPTANCE OF POWER OF ATTORNEY

This is in response to the Power of Attorney filed 02/13/2012.

The Power of Attorney in this application is accepted. Correspondence in this application will be mailed to the above address as provided by 37 CFR 1.33.

/dcgoodwyn/

Office of Data Management, Application Assistance Unit (571) 272-4000, or (571) 272-4200, or 1-888-786-0101

UNITED STATES PATENT AND TRADEMARK OFFICE

UNITED STATES DEPARTMENT OF COMMERCE
United States Patent and Trademark Office
Address: COMMISSIONER FOR PATENTS
P.O. Box 1450
Alexandria, Virginia 22313-1450
www.uspto.gov

APPLICATION NUMBER	FILING OR 371(C) DATE	FIRST NAMED APPLICANT	ATTY. DOCKET NO./TITLE
12/603,507	10/21/2009	Kenneth Stewart Gold	38402-20701

CONFIRMATION NO. 6656

POWER OF ATTORNEY NOTICE

Mark H. Krietzman
c/o The Eclipse Group
Suite 150
1920 Main Street
Irvine, CA 92614

OC000000052653817

Date Mailed: 02/17/2012

NOTICE REGARDING CHANGE OF POWER OF ATTORNEY

This is in response to the Power of Attorney filed 02/13/2012.

- The Power of Attorney to you in this application has been revoked by the applicant. Future correspondence will be mailed to the new address of record(37 CFR 1.33).

/dcgoodwyn/

Office of Data Management, Application Assistance Unit (571) 272-4000, or (571) 272-4200, or 1-888-786-0101

UNITED STATES PATENT AND TRADEMARK OFFICE

Commissioner for Patents
United States Patent and Trademark Office
P.O. Box 1450
Alexandria, VA 22313-1450
www.uspto.gov

PERKINS COIE LLP
P.O. BOX 1208
SEATTLE, WA 98111-1208

MAILED
MAR 07 2011
OFFICE OF PETITIONS

In re Application of	:	
RILEY, Philip	:	
Application No. 12/603,542	:	DECISION ON PETITION
Filed: October 21, 2009	:	TO WITHDRAW
Attorney Docket No. 0023-0585DIV1	:	FROM RECORD
	:	

This is a decision on the Request to Withdraw as attorney or agent of record under 37 C.F.R. § 1.36(b), filed January 27, 2011.

The request is **NOT APPROVED** because it is moot.

A review of the file record indicates that the power of attorney to **PERKINS COIE LLP** has been revoked by the assignee of the patent application on February 11, 2011. Accordingly, the request to withdraw under 37 C.F.R. § 1.36(b) is moot.

All future communications from the Office will continue to be directed to the below-listed address until otherwise notified by applicant.

Telephone inquires concerning this decision should be directed to Tredelle Jackson at 571-272-2783.

/Tredelle D. Jackson/
Paralegal Specialist
Office of Petitions

cc: **HARRITY & HARRITY, LLP**
11350 RANDOM HILLS ROAD
SUITE 600
FAIRFAX VA 22030

UNITED STATES PATENT AND TRADEMARK OFFICE

Commissioner for Patents
United States Patent and Trademark Office
P.O. Box 1450
Alexandria, VA 22313-1450
www.uspto.gov

DICKINSON WRIGHT PLLC
2600 WEST BIG BEAVER ROAD
SUITE 300
TROY MI 48084-3312

MAILED
JAN 03 2012
OFFICE OF PETITIONS

In Re application of
Merrill Sparago
Application No. 12/603,713
Filed: October 22, 2009
Attorney Docket No. 38218-6

ON PETITION

This is a decision on the petition under 37 CFR 1.59(b), filed November 22, 2011 to expunge information from the above identified application.

The petition is **granted**.

Petitioner requests that the amendment and terminal disclaimer, filed November 21, 2011, be expunged from the record. Petitioner states that the papers submitted were erroneously filed in the instant application.

The information in question has been determined by the undersigned to not be material to the examination of the instant application. The information was clearly intended to be filed in a different application.

The expunged material has been removed from the official file.

In accordance with MPEP 724.05(III), no petition is needed since the papers in question were clearly identified for a different application. Therefore, the petition fee is refunded.

Telephone inquiries relative to this decision should be directed to Carl Friedman at (571) 272-6842.

Carl Friedman
Petitions Examiner
Office of Petitions

UNITED STATES PATENT AND TRADEMARK OFFICE

UNITED STATES DEPARTMENT OF COMMERCE
United States Patent and Trademark Office
Address: COMMISSIONER FOR PATENTS
P.O. Box 1450
Alexandria, Virginia 22313-1450
www.uspto.gov

APPLICATION NO.	FILING DATE	FIRST NAMED INVENTOR	ATTORNEY DOCKET NO.	CONFIRMATION NO.
12/603,723	10/22/2009	Yoshiaki MINAMI	349870US26	7090

22850 7590 11/09/2011
OBLON, SPIVAK, MCCLELLAND MAIER & NEUSTADT, L.L.P.
1940 DUKE STREET
ALEXANDRIA, VA 22314

EXAMINER
GREGORY, BERNARR E

ART UNIT	PAPER NUMBER
3662	

NOTIFICATION DATE	DELIVERY MODE
11/09/2011	ELECTRONIC

Please find below and/or attached an Office communication concerning this application or proceeding.

The time period for reply, if any, is set in the attached communication.

Notice of the Office communication was sent electronically on above-indicated "Notification Date" to the following e-mail address(es):

patentdocket@oblon.com
oblonpat@oblon.com
jgardner@oblon.com

UNITED STATES PATENT AND TRADEMARK OFFICE

Commissioner for Patents
United States Patent and Trademark Office
P.O. Box 1450
Alexandria, VA 22313-1450
www.uspto.gov

NOV - 8 2011

OBLON, SPIVAK, MCCLELLAND MAIER &
NEUSTADT, L.L.P.
1940 DUKE STREET
ALEXANDRIA VA 22314

In re application of Yoshiaki Minami Application No. 12/603,723 Filed: October 22, 2009 For: RADAR DEVICE	**DECISION ON REQUEST TO PARTICIPATE IN PATENT PROSECUTION HIGHWAY PROGRAM AND PETITION TO MAKE SPECIAL UNDER 37 CFR 1.102(a)**

This is a decision on the request to participate in the Patent Prosecution Highway (PPH) program and the petition under 37 CFR 1.102(a), filed August 16, 2011, to make the above-identified application special.

The request and petition are **DISMISSED**.

A grantable request to participate in the PPH pilot program and petition to make special require:

(1) The U.S. application must validly claim priority under 35 U.S.C. 119(a) to one or more applications filed in the JPO;
(2) Applicant must submit a copy of the allowable/patentable claim(s) from the JPO application(s) along with an English translation thereof and a statement that the English translation is accurate;
(3) All the claims in the U.S. application must sufficiently correspond or be amended to sufficiently correspond to the allowable/patentable claim(s) in the JPO application(s);
(4) Examination of the U.S. application has not begun;
(5) Applicant must submit a copy of the latest Office action from each of the JPO application(s) containing the allowable/patentable claim(s) along with an English translation thereof and a statement that the English translation is accurate;
(6) Applicant must submit an IDS listing the documents cited by the JPO examiner in the JPO Office action along with copies of documents except U.S. patents or U.S. patent application publications.

The request to participate in the PPH pilot program and petition fail to include:
(3) All the claims in the U.S. application must sufficiently correspond or be amended to sufficiently correspond to the allowable/patentable claim(s) in the JPO application(s);

US claim 1 not corresponding to patentable claim 1 of JP 2008-292349 application. See the last 10 lines of US claim 1.

Applicant is given a time period of **ONE MONTH or THIRTY DAYS**, whichever is longer, to correct the deficiencies. **NO EXTENSION OF TIME UNDER 37 CFR 1.136 IS PERMITTED.** If the deficiencies are not corrected with the time period given, the application will await action in its regular turn. All replies to a decision to dismiss must be submitted by EFS-Web using the document description "Petition to make special under Patent Prosecution Highway."

Any inquiry regarding this decision should be directed to Mikado Buiz, Quality Assurance Specialist, at (571) 272-6578.

/ Mikado Buiz /

Mikado Buiz,
Quality Assurance Specialist
Technology Center 3600

MB/MB: 11/07/11

UNITED STATES PATENT AND TRADEMARK OFFICE

Commissioner for Patents
United States Patent and Trademark Office
P.O. Box 1450
Alexandria, VA 22313-1450
www.uspto.gov

Edward J. Marshall, Attorney at Law
8705 Shoal Creek Blvd.
Suite 202
Austin TX 78757

MAILED
SEP 21 2011
OFFICE OF PETITIONS

In re Application of	:	
Michael McCown	:	DECISION ON PETITION
Application No. 12/603,741	:	TO WITHDRAW
Filed: October 22, 2009	:	FROM RECORD
Attorney Docket No. **000498.000002**	:	

This is a decision on the request to withdraw as attorney of record under 37 CFR § 1.36, filed September 14, 2011.

The request is **NOT APPROVED**.

The request cannot be approved because the attorney cannot withdraw attorneys' individually when the power of attorney was originally granted by Customer Number in the Declaration and Power of Attorney filed October 22, 2009.

All future communications from the Office will continue to be directed to the above-listed address until otherwise notified by applicant.

Telephone inquires concerning this decision should be directed to the undersigned at (571) 272-4584.

/JoAnne Burke/
JoAnne Burke
Petitions Examiner
Office of Petitions

UNITED STATES PATENT AND TRADEMARK OFFICE

Commissioner for Patents
United States Patent and Trademark Office
P.O. Box 1450
Alexandria, VA 22313-1450
www.uspto.gov

Edward J. Marshall, Attorney at Law
8705 Shoal Creek Blvd.
Suite 202
Austin TX 78757

MAILED

OCT 20 2011

OFFICE OF PETITIONS

In re Application of	:	
Michael McCown	:	DECISION ON PETITION
Application No. 12/603,741	:	TO WITHDRAW
Filed: October 22, 2009	:	FROM RECORD
Attorney Docket No. **000498.000002**	:	

This is a decision on the renewed request to withdraw as attorney of record under 37 CFR § 1.36, filed October 11, 2011.

The request is **APPROVED**.

A grantable request to withdraw as attorney/agent of record must be signed by every attorney/agent seeking to withdraw or contain a clear indication that one attorney is signing on behalf of another/others. The Office requires the practitioner(s) requesting withdrawal to certify that he, she, or they have: (1) given reasonable notice to the client, prior to the expiration of the response period, that the practitioner(s) intends to withdraw from employment; (2) delivered to the client or a duly authorized representative of the client all papers and property (including funds) to which the client is entitled; and (3) notified the client of any responses that may be due and the time frame within which the client must respond , pursuant to 37 CFR 10.40.

The request was signed by Edward J. Marshall on behalf of all attorneys of record who are associated with Customer Number 87457.

All attorneys/agents associated with Customer Number 87457 have been withdrawn. Applicant is reminded that there is no attorney of record at this time.

The correspondence address of record has been changed and all future correspondence will be directed to the first named inventor Michael McCown at the address indicated below.

There is no outstanding Office action mailed that requires a reply from the applicant.

Telephone inquiries concerning this decision should be directed to the undersigned at 571-272-4584.

/JoAnne Burke/
JoAnne Burke
Petitions Examiner
Office of Petitions

cc: Michael McCown
132 Nichols Lane
Bastrop, TX 78602

UNITED STATES PATENT AND TRADEMARK OFFICE

UNITED STATES DEPARTMENT OF COMMERCE
United States Patent and Trademark Office
Address: COMMISSIONER FOR PATENTS
P.O. Box 1450
Alexandria, Virginia 22313-1450
www.uspto.gov

APPLICATION NUMBER	FILING OR 371(C) DATE	FIRST NAMED APPLICANT	ATTY: DOCKET NO./TITLE
12/603,741	10/22/2009	Michael McCown	000498.000002

CONFIRMATION NO. 7121

POWER OF ATTORNEY NOTICE

87457
Edward J. Marshall, Attorney at Law
8705 Shoal Creek Blvd.
Suite 202
Austin, TX 78757

OC000000050512000

Date Mailed: 10/20/2011

NOTICE REGARDING CHANGE OF POWER OF ATTORNEY

This is in response to the Power of Attorney filed 10/11/2011.

- The withdrawal as attorney in this application has been accepted. Future correspondence will be mailed to the new address of record. 37 CFR 1.33.

/jlburke/

Office of Data Management, Application Assistance Unit (571) 272-4000, or (571) 272-4200, or 1-888-786-0101

PTO/SB/20PCT-KR (06-10)
Approved for use through 01/31/2012. OMB 0651-0058
U.S. Patent and Trademark Office; U. S. DEPARTMENT OF COMMERCE
Under the Paperwork Reduction Act of 1995, no persons are required to respond to a collection of information unless it displays a valid OMB control number.

REQUEST FOR PARTICIPATION IN THE PATENT COOPERATION TREATY - PATENT PROSECUTION HIGHWAY (PCT-PPH) PILOT PROGRAM BETWEEN THE KOREAN INTELLECTUAL PROPERTY OFFICE (KIPO) AND THE USPTO

Application No:	12/603749	Filing date:	22-OCT-2009
First Named Inventor:	Mark Joseph Kuzdzal		
Title of the Invention:	LUBRICATION SYSTEM FOR SUBSEA COMPRESSOR		

THIS REQUEST FOR PARTICIPATION IN THE PCT-PPH PILOT PROGRAM ALONG WITH THE REQUIRED DOCUMENTS MUST BE SUBMITTED VIA EFS-WEB. INFORMATION REGARDING EFS-WEB IS AVAILABLE AT HTTP://WWW.USPTO.GOV/EBC/EFS_HELP.HTML

APPLICANT HEREBY REQUESTS PARTICIPATION IN THE PCT-PPH PROGRAM AND PETITIONS TO MAKE THE ABOVE-IDENTIFIED APPLICATION SPECIAL UNDER THE PCT-PPH PROGRAM.

The above-identified application is (1) a national stage entry of the corresponding PCT application, or (2) a national stage entry of another PCT application which claims priority to the corresponding PCT application, or (3) a national application that claims domestic/ foreign priority to the corresponding PCT application, or (4) a national application which forms the basis for the priority claim in the corresponding PCT application, or (5) a continuing application of a U.S. application that satisfies one of (1) to (4) above, or (6) a U.S. application that claims domestic benefit to a U.S. provisional application which forms the basis for the priority claim in the corresponding PCT application.

The corresponding PCT application number(s) is/are: PCT/US2010/048665

The international filing date of the corresponding PCT application(s) is/are: 13-SEPTEMBER-2010

I. List of Required Documents:

a. **A copy of the latest international work product (WO/ISA, WO/IPEA, or IPER) in the above–identified corresponding PCT application(s)**

- [x] Is attached.
- [ ] Is not attached because the document is already in the U.S. application.

b. **A copy of all claims which were indicated as having novelty, inventive step and industrial applicability in the above-identified corresponding PCT application(s).**

- [x] Is attached.
- [ ] Is not attached because the document is already in the U.S. application.

c. **English translations of the documents in a. and b. above are attached (if the documents are not in the English language). A statement that the English translation is accurate is attached for the document in b. above.**

This collection of information is required by 35 U.S.C. 119, 37 CFR 1.55, and 37 CFR 1.102(d). The information is required to obtain or retain a benefit by the public, which is to file (and by the USPTO to process) an application. Confidentiality is governed by 35 U.S.C. 122 and 37 CFR 1.11 and 1.14. This collection is estimated to take 2 hours to complete, including gathering, preparing, and submitting the completed application form to the USPTO. Time will vary depending upon the individual case. Any comments on the amount of time you require to complete this form and/or suggestions for reducing this burden should be sent to the Chief Information Officer, U.S. Patent and Trademark Office, U.S. Department of Commerce, P.O. Box 1450, Alexandria, VA 22313-1450. DO NOT SEND FEES OR COMPLETED FORMS TO THIS ADDRESS.

Approved for use through 01/31/2012. OMB 0651-0058
U.S.Patent and Trademark Office; U.S. DEPARTMENT OF COMMERCE
Under the Paperwork Reduction Act of 1995, no persons are required to respond to a collection of information unless it displays a valid OMB control number.

REQUEST FOR PARTICIPATION IN THE PCT-PPH PILOT PROGRAM BETWEEN THE KIPO AND THE USPTO

(continued)

Application No.:	12/603749
First Named Inventor:	Mark Joseph Kuzdzal

d. **(1) An information disclosure statement listing the documents cited in the international work products (ISR, WO/ISA, WO/IPEA, IPER) of the corresponding PCT application.**

☑ Is attached

☐ Has already been filed in the above-identified U.S. application on _____

(2) Copies of all documents (except) for U.S. patents or U.S. patent application publications)

☑ Are attached.

☐ Have already been filed in the above-identified U.S. application on _____

II. Claims Correspondence Table:

Claims in US Application	Patentable Claims in the corresponding PCT Application	Explanation regarding the correspondence
1	1	Applicant has amended US claim 1 to correspond to PCT claim 1.
2-6	2-6	US claims 2-6, as originally filed, correspond to PCT claims 2-6.
7	9	Applicant has amended US claim 7 to correspond PCT claim 9.
8-12	10-14	US claims 8-12, as originally filed, correspond to PCT claims 10-14.
13	15	Applicant has amended US claim 13 to correspond to PCT claim 15.
14-18	16-20	US claims 14-18, as originally filed, correspond to PCT claims 16-20.
19-20	7-8	Applicant has added new claims 19-20, which correspond to PCT claims 7-8.

III. All the claims in the US application sufficiently correspond to the patentable claims in the corresponding PCT application.

Signature /N. Alexander Nolte/	Date 6/9/2011
Name (Print/Typed) N. Alexander Nolte	Registration Number 45,689

Privacy Act Statement

The **Privacy Act of 1974 (P.L. 93-579)** requires that you be given certain information in connection with your submission of the attached form related to a patent application or patent. Accordingly, pursuant to the requirements of the Act, please be advised that: (1) the general authority for the collection of this information is 35 U.S.C. 2(b)(2); (2) furnishing of the information solicited is voluntary; and (3) the principal purpose for which the information is used by the U.S. Patent and Trademark Office is to process and/or examine your submission related to a patent application or patent. If you do not furnish the requested information, the U.S. Patent and Trademark Office may not be able to process and/or examine your submission, which may result in termination of proceedings or abandonment of the application or expiration of the patent.

The information provided by you in this form will be subject to the following routine uses:

1. The information on this form will be treated confidentially to the extent allowed under the Freedom of Information Act (5 U.S.C. 552) and the Privacy Act (5 U.S.C 552a). Records from this system of records may be disclosed to the Department of Justice to determine whether disclosure of these records is required by the Freedom of Information Act.
2. A record from this system of records may be disclosed, as a routine use, in the course of presenting evidence to a court, magistrate, or administrative tribunal, including disclosures to opposing counsel in the course of settlement negotiations.
3. A record in this system of records may be disclosed, as a routine use, to a Member of Congress submitting a request involving an individual, to whom the record pertains, when the individual has requested assistance from the Member with respect to the subject matter of the record.
4. A record in this system of records may be disclosed, as a routine use, to a contractor of the Agency having need for the information in order to perform a contract. Recipients of information shall be required to comply with the requirements of the Privacy Act of 1974, as amended, pursuant to 5 U.S.C. 552a(m).
5. A record related to an International Application filed under the Patent Cooperation Treaty in this system of records may be disclosed, as a routine use, to the International Bureau of the World Intellectual Property Organization, pursuant to the Patent Cooperation Treaty.
6. A record in this system of records may be disclosed, as a routine use, to another federal agency for purposes of National Security review (35 U.S.C. 181) and for review pursuant to the Atomic Energy Act (42 U.S.C. 218(c)).
7. A record from this system of records may be disclosed, as a routine use, to the Administrator, General Services, or his/her designee, during an inspection of records conducted by GSA as part of that agency's responsibility to recommend improvements in records management practices and programs, under authority of 44 U.S.C. 2904 and 2906. Such disclosure shall be made in accordance with the GSA regulations governing inspection of records for this purpose, and any other relevant (*i.e.*, GSA or Commerce) directive. Such disclosure shall not be used to make determinations about individuals.
8. A record from this system of records may be disclosed, as a routine use, to the public after either publication of the application pursuant to 35 U.S.C. 122(b) or issuance of a patent pursuant to 35 U.S.C. 151. Further, a record may be disclosed, subject to the limitations of 37 CFR 1.14, as a routine use, to the public if the record was filed in an application which became abandoned or in which the proceedings were terminated and which application is referenced by either a published application, an application open to public inspection or an issued patent.
9. A record from this system of records may be disclosed, as a routine use, to a Federal, State, or local law enforcement agency, if the USPTO becomes aware of a violation or potential violation of law or regulation.

UNITED STATES PATENT AND TRADEMARK OFFICE

JUL 26 2011

Commissioner for Patents
United States Patent and Trademark Office
P.O. Box 1450
Alexandria, VA 22313-1450
www.uspto.gov

Edmonds Nolte, PC
16815 ROYAL CREST DRIVE
SUITE 130
HOUSTON TX 77058

In re application of Mark Joseph Kuzdzal Application No. 12/603,749 Filed: October 22, 2009 For: LUBRICATION SYSTEM FOR SUBSEA COMPRESSOR	:	**DECISION ON REQUEST TO PARTICIPATE IN PATENT PROSECUTION HIGHWAY PROGRAM AND PETITION TO MAKE SPECIAL UNDER 37 CFR 1.102(a)**

This is a decision on the request to participate in the Patent Prosecution Highway (PPH) program and the petition under 37 CFR 1.102(a), filed June 09, 2011, to make the above-identified application special.

The request and petition are **GRANTED**.

A grantable request to participate in the PPH program and petition to make special require:

(1) The U.S. application must disclose an eligible relationship to one or more PCT applications filed in the KIPO or USPTO;
(2) Applicant must submit a copy of the allowable/patentable claim(s) from the PCT application(s) latest international work product (the written opinion or the IPER) along with an English translation thereof and a statement that the English translation is accurate;
(3) All the claims in the U.S. application must sufficiently correspond or be amended to sufficiently correspond to the allowable/patentable claim(s) in the PCT application(s);
(4) Examination of the U.S. application has not begun;
(5) Applicant must submit a copy of the latest international work product from the PCT application containing the allowable/patentable claim(s) along with an English translation thereof and a statement that the English translation is accurate;
(6) Applicant must submit an IDS listing the documents cited by the PCT examiner in the international work product along with copies of documents except U.S. patents or U.S. patent application publications.

In light of the preliminary amendment filed on June 09, 2011 and the petition being properly submitted via EFS-Web as is required, the request to participate in the PPH program complies with the above requirements, the above-identified application has been accorded "special" status.

All other inquiries concerning the examination or status of the application should be directed to the Patent Application Information Retrieval (PAIR) system.

The application is being forwarded to the examiner for action on the merits commensurate with this decision.

Any inquiry regarding this decision should be directed to Mikado Buiz, Quality Assurance Specialist, at (571) 272-6578.

/ Mikado Buiz /

Mikado Buiz,
Quality Assurance Specialist
Technology Center 3600

MB/MB: 7/26/11

UNITED STATES PATENT AND TRADEMARK OFFICE

UNITED STATES DEPARTMENT OF COMMERCE
United States Patent and Trademark Office
Address: COMMISSIONER FOR PATENTS
P.O. Box 1450
Alexandria, Virginia 22313-1450
www.uspto.gov

APPLICATION NO.	FILING DATE	FIRST NAMED INVENTOR	ATTORNEY DOCKET NO.	CONFIRMATION NO.
12/603,749	10/22/2009	Mark Joseph Kuzdzal	42495.433	7134

60935 7590 09/30/2011
Edmonds Nolte, PC
16815 ROYAL CREST DRIVE
SUITE 130
HOUSTON, TX 77058

EXAMINER
BUSE, MARK KENNETH

ART UNIT	PAPER NUMBER
3654	

NOTIFICATION DATE	DELIVERY MODE
09/30/2011	ELECTRONIC

Please find below and/or attached an Office communication concerning this application or proceeding.

The time period for reply, if any, is set in the attached communication.

Notice of the Office communication was sent electronically on above-indicated "Notification Date" to the following e-mail address(es):

docketing@edmondsnolte.com

UNITED STATES PATENT AND TRADEMARK OFFICE

SEP 29 2011

Commissioner for Patents
United States Patent and Trademark Office
P.O. Box 1450
Alexandria, VA 22313-1450
www.uspto.gov

Edmonds Nolte, PC
16815 ROYAL CREST DRIVE
SUITE 130
HOUSTON TX 77058

In re application of Mark Joseph Kuzdzal Application No. 12/603,749 Filed: October 22, 2009 For: LUBRICATION SYSTEM FOR SUBSEA COMPRESSOR	**DECISION ON REQUEST TO PARTICIPATE IN PATENT PROSECUTION HIGHWAY PROGRAM AND PETITION TO MAKE SPECIAL UNDER 37 CFR 1.102(a)**

This is a decision on the request to participate in the Patent Prosecution Highway (PPH) program and the petition under 37 CFR 1.102(a), filed June 09, 2011 to make the above-identified application special.

The request and petition are **GRANTED**.

A grantable request to participate in the PPH program and petition to make special require:

(1) The U.S. application must disclose an eligible relationship to one or more PCT applications filed in the KIPO or USPTO;
(2) Applicant must submit a copy of the allowable/patentable claim(s) from the PCT application(s) latest international work product (the written opinion or the IPER) along with an English translation thereof and a statement that the English translation is accurate;
(3) All the claims in the U.S. application must sufficiently correspond or be amended to sufficiently correspond to the allowable/patentable claim(s) in the PCT application(s);
(4) Examination of the U.S. application has not begun;
(5) Applicant must submit a copy of the latest international work product from the PCT application containing the allowable/patentable claim(s) along with an English translation thereof and a statement that the English translation is accurate;
(6) Applicant must submit an IDS listing the documents cited by the PCT examiner in the international work product along with copies of documents except U.S. patents or U.S. patent application publications.

In light of the petition being properly submitted via EFS-Web as is required, the request to participate in the PPH program complies with the above requirements, the above-identified application has been accorded "special" status.

All other inquiries concerning the examination or status of the application should be directed to the Patent Application Information Retrieval (PAIR) system.

The application is being forwarded to the examiner for action on the merits commensurate with this decision as soon as any pre-exam processing has been completed.

Any inquiry regarding this decision should be directed to Mikado Buiz, Quality Assurance Specialist, at (571) 272-6578.

/ Mikado Buiz /

Mikado Buiz,
Quality Assurance Specialist
Technology Center 3600

MB/MB: 09/28/11

UNITED STATES PATENT AND TRADEMARK OFFICE

Commissioner for Patents
United States Patent and Trademark Office
P.O. Box 1450
Alexandria, VA 22313-1450
www.uspto.gov

VERIZON
PATENT MANAGEMENT GROUP
1320 North Court House Road
9th Floor
ARLINGTON VA 22201-2909

MAILED
SEP 28 2010
OFFICE OF PETITIONS

In re Application of	:	
Ahmed Refaat M. Darwish	:	
Application No. 12/603761	:	DECISION DISMISSING
Filing or 371(c) Date: 10/22/2009	:	PETITION UNDER
Title of Invention:	:	37 CFR 1.47(b)
LABEL DISTRIBUTION PROTOCOL	:	
SYNCHRONIZATION IN MULTI-PROTOCOL	:	
LABEL SWITCHING ENVIRONMENTS	:	

This is in response to the Request for Reconsideration of Petition Under 37 C.F.R. 1.47(b), filed September 10, 2010, to allow a person to whom an inventor has assigned or agreed in writing to assign the invention, or who otherwise shows sufficient proprietary interest in the matter justifying such action, to make application on behalf of and as agent for all inventors.

The petition is **granted**.

The above-identified application and papers have been reviewed and found in compliance with 37 CFR 1.47(b). This application is hereby accorded Rule 1.47(b) status.

Petitioner has shown that the non-signing inventor, Ahmed Refaat M. Darwish, refuses to join in the application.

As provided in Rule 1.47, this Office will forward notice of this application's filing to the non-signing inventors at the addresses given in the Petition. Notice of the filing of this application will also be published in the Official Gazette.

The application file is being referred to the Office of Patent Application Processing for continued processing in the normal course of business.

Telephone inquiries related to this decision may be directed to the undersigned at (571) 272-3232.

/DLW/

Derek L. Woods
Attorney
Office of Petitions

UNITED STATES PATENT AND TRADEMARK OFFICE

Commissioner for Patents
United States Patent and Trademark Office
P.O. Box 1450
Alexandria, VA 22313-1450
www.uspto.gov

MR. AHMED REFAAT M. DARWISH
11160-C1 SOUTH LAKES DRIVE, #271
RESTON, VA 20191

MAILED
SEP 28 2010
OFFICE OF PETITIONS

In re Application of	:	
Ahmed Refaat M. Darwish	:	
Application No. 12/603761	:	LETTER
Filing or 371(c) Date: 10/22/2009	:	
Title of Invention:	:	
LABEL DISTRIBUTION PROTOCOL	:	
SYNCHRONIZATION IN MULTI-PROTOCOL	:	
LABEL SWITCHING ENVIRONMENTS	:	

Dear Mr. Darwish:

You are named as the inventor in the above-identified United States patent application filed under the provisions of 35 U.S.C. 116 (United States Code) and 37 CFR 1.47(b), Rules of Practice in Patent Cases. Should a patent be granted on the application you will be designated therein as a joint inventor.

As the inventor you are entitled to inspect any paper in the file wrapper of the application, order copies of all or any part thereof (at a prepaid cost per 37 CFR 1.19) or make your position of record in the application. Alternatively, you may arrange to do any of the preceding through a registered patent attorney or agent presenting written authorization from you. If you care to join the application, counsel of record (see below) would presumably assist you. Joining in the application would entail the filing of an appropriate oath or declaration by you pursuant to 37 CFR 1.63.

Telephone inquiries regarding this communication should be directed to the undersigned at (571) 272-3232. Requests for information regarding your application should be directed to the File Information Unit at (703) 308-2733. Information regarding how to pay for and order a copy of the application, or a specific paper in the application, should be directed to Certification Division at (703) 308-9726 or 1-800-972-6382 (outside the Washington D.C. area).

/Derek L. Woods/

Derek L. Woods
Attorney
Office of Petitions

cc: VERIZON
PATENT MANAGEMENT GROUP
1320 North Court House Road
9th Floor
ARLINGTON VA 22201-2909

UNITED STATES PATENT AND TRADEMARK OFFICE

Commissioner for Patents
United States Patent and Trademark Office
P.O. Box 1450
Alexandria, VA 22313-1450
www.uspto.gov

Eli Weiss, Esq.
Oakwood Law Group, LLP
14 Bond Street -- SUITE 386
Great Neck NY 11021

MAILED
FEB 06 2012
OFFICE OF PETITIONS

In re Application of

Sedillo-Beadell :

Application No. 12/603,765

: DECISION ON PETITION

Filed: October 22, 2009

:

Attorney Docket No. **09091005**

This is a decision on the petition under 37 CFR 1.137(b), filed January 15, 2012, to revive the above-identified application.

The petition is **GRANTED**.

The above-cited application became abandoned for failure to reply in a timely manner to the restriction/election requirement mailed May 5, 2011, which set a shortened period for reply of one month from its mailing date. A response was not received within the allowable period. The application became abandoned on June 6, 2011. A Notice of Abandonment was mailed December 9, 2011.

The election filed January1 5, 2012, is noted.

The application is being forwarded to Technology Center 3700, GAU 3776 for further processing.

Telephone inquiries concerning this decision should be directed to the undersigned at (571) 272-3222. ,

/Kenya A. McLaughlin/

Kenya A. McLaughlin
Petitions Attorney
Office of Petitions

UNITED STATES PATENT AND TRADEMARK OFFICE

COMMISSIONER FOR PATENTS
UNITED STATES PATENT AND TRADEMARK OFFICE
P.O. BOX 1450
ALEXANDRIA, VA 22313-1450
www.uspto.gov

GROSSMAN, TUCKER, PERREAULT & PFLEGER, PLLC
55 SOUTH COMMERICAL STREET
MANCHESTER NH 03101

MAILED
JAN 3 1 2011
OFFICE OF PETITIONS

In re Application of	:	
Rhee, Lee, Kim, Min and Kim	:	
Application No. 12/603,766	:	DECISION ON PETITION
Filed: 10/22/2009	:	
Attorney Docket No. EZP006	:	
Title: FABRICATION METHOD OF TWO-	:	
TERMINAL SEMICONDUCTOR	:	
COMPONENT USING TRENCH	:	
TECHNOLOGY	:	

This is a decision on the petitions filed January 4, 2011, which are being treated as (1) a petition under 37 CFR 1.48(a) to add a named inventor; (2) a petition under 37 CFR 1.183 to waive 37 CFR 1.48(a)(2); and (3) a renewed petition under 37 CFR 1.47(a).

The petitions are **GRANTED**.

Applicants request that Wan-Joo Kim be added as an inventor for this application. Applicants assert that they presented Kim with a complete copy of the application; however, he has refused to sign the declaration and join the application. Therefore, applicants seek relief under 37 CFR 1.48(a), 37 CFR 1.183 to waive 37 CFR 1.48(a)(2), and 37 CFR 1.47(a).

Pursuant to 37 CFR 1.183, in an extraordinary situation, when justice requires, any requirement of the regulations, which is not a requirement of the statutes, may be suspended or waived by the Director or the Director's designee, *sua sponte*, or on petition of the interested party.

In the present petition, applicants showed that they made diligent efforts to obtain a statement from Kim that the error in inventorship occurred without deceptive intention on his part; however, it was to no avail. In view of the fact that Kim refuses to join the application, it is agreed that justice would be served by waiving the requirement of 37 CFR 1.48(a)(2). Accordingly, the petition under 37 CFR 1.183 is **granted**.

As to the petition under 37 CFR 1.47(a), the Office notes that a grantable petition under 37 CFR 1.47(a) requires:

> (1) proof that the non-signing inventor cannot be reached or refuses to sign the oath or declaration after having been presented with the application papers (specification, claims and drawings);
>
> (2) an acceptable oath or declaration in compliance with 35 U.S.C. §§ 115 and 116;
>
> (3) the petition fee; and
>
> (4) a statement of the last known address of the non-signing inventor.

A review of the renewed petition reveals that applicants have meet the requirements of 37 CFR 1.47(a). Specifically, applicants established that they provided a complete copy of the application to the non-signing inventor. However, the non-signing inventor refused to sign the declaration and join the application. Thus, the petition under 37 CFR 1.47(a) is **granted**.

The above-identified application and papers have been reviewed and are found to be in compliance with 37 CFR 1.47(a). Accordingly, the above-identified application is hereby accorded Rule 1.47(a) status. As provided in 37 CFR 1.47(c), this Office will forward notice of this application's filing to the non-signing inventor at the last known address provided in the petition. Notice of the filing of this application will also be published in the Official Gazette.

Pursuant to 37 CFR 1.48(a):

> *Nonprovisional application after oath /declaration filed.* If the inventive entity is set forth in error in an executed § 1.63 oath or declaration in a nonprovisional application, and such error arose without any deceptive intention on the part of the person named as an inventor in error or on the part of the person who through error was not named as an inventor, the inventorship of the nonprovisional application may be amended to name only the actual inventor or inventors. Amendment of the inventorship requires:
>
> (1) A request to correct the inventorship that sets forth the desired inventorship change;
>
> (2) A statement from each person being added as an inventor and from each person being deleted as an inventor that the error in inventorship occurred without deceptive intention on his or her part;
>
> (3) An oath or declaration by the actual inventor or inventors as required by § 1.63 or as permitted by §§ 1.42, 1.43 or § 1.47;
>
> (4) The processing fee set forth in § 1.17(i); and

(5) If an assignment has been executed by any of the original named inventors, the written consent of the assignee (see § 3.73(b) of this chapter).

Applicants have meet the requirements of 37 CFR 1.48(a). Accordingly, the petition under 37 CFR 1.48(a) is **granted**.

The application is being forwarded to Technology Center Art Unit 2829.

Telephone inquiries related to this decision may be directed to the undersigned at (571) 272-3211.

Christina Tartera Donnell

Christina Tartera Donnell
Senior Petitions Attorney
Office of Petitions

Enclosure: Corrected Filing Receipt

UNITED STATES PATENT AND TRADEMARK OFFICE

UNITED STATES DEPARTMENT OF COMMERCE
United States Patent and Trademark Office
Address: COMMISSIONER FOR PATENTS
P.O. Box 1450
Alexandria, Virginia 22313-1450
www.uspto.gov

APPLICATION NUMBER	FILING or 371(c) DATE	GRP ART UNIT	FIL FEE REC'D	ATTY.DOCKET.NO	TOT CLAIMS	IND CLAIMS
12/603,766	10/22/2009	2829	527	EZP006	14	2

CONFIRMATION NO. 7171

CORRECTED FILING RECEIPT

32047
GROSSMAN, TUCKER, PERREAULT & PFLEGER, PLLC
55 SOUTH COMMERICAL STREET
MANCHESTER, NH 03101

OC000000045769672

Date Mailed: 01/31/2011

Receipt is acknowledged of this non-provisional patent application. The application will be taken up for examination in due course. Applicant will be notified as to the results of the examination. Any correspondence concerning the application must include the following identification information: the U.S. APPLICATION NUMBER, FILING DATE, NAME OF APPLICANT, and TITLE OF INVENTION. Fees transmitted by check or draft are subject to collection. Please verify the accuracy of the data presented on this receipt. **If an error is noted on this Filing Receipt, please submit a written request for a Filing Receipt Correction. Please provide a copy of this Filing Receipt with the changes noted thereon. If you received a "Notice to File Missing Parts" for this application, please submit any corrections to this Filing Receipt with your reply to the Notice. When the USPTO processes the reply to the Notice, the USPTO will generate another Filing Receipt incorporating the requested corrections**

Applicant(s)

Jin-Koo Rhee, Seoul, KOREA, REPUBLIC OF;
Seong-Dae Lee, Seoul, KOREA, REPUBLIC OF;
Mi-Ra Kim, Seoul, KOREA, REPUBLIC OF;
Dae-Hong Min, Seoul, KOREA, REPUBLIC OF;
Wan-Joo Kim, Daejeon, KOREA, REPUBLIC OF;

Assignment For Published Patent Application

Dongguk University Industry-Academic Cooperation Foundation, Seoul, KOREA, REPUBLIC OF

Power of Attorney: The patent practitioners associated with Customer Number 32047

Domestic Priority data as claimed by applicant

Foreign Applications (You may be eligible to benefit from the **Patent Prosecution Highway** program at the USPTO. Please see http://www.uspto.gov for more information.)
REPUBLIC OF KOREA 10-2008-0105029 10/24/2008

Request to Retrieve - This application either claims priority to one or more applications filed in an intellectual property Office that participates in the Priority Document Exchange (PDX) program or contains a proper **Request to Retrieve Electronic Priority Application(s)** (PTO/SB/38 or its equivalent). Consequently, the USPTO will attempt to electronically retrieve these priority documents.

If Required, Foreign Filing License Granted: 11/05/2009

The country code and number of your priority application, to be used for filing abroad under the Paris Convention, is **US 12/603,766**

Projected Publication Date: 03/10/2011

Non-Publication Request: No

Early Publication Request: No
**** SMALL ENTITY ****
Title

FABRICATION METHOD OF TWO-TERMINAL SEMICONDUCTOR COMPONENT USING TRENCH TECHNOLOGY

Preliminary Class

438

PROTECTING YOUR INVENTION OUTSIDE THE UNITED STATES

Since the rights granted by a U.S. patent extend only throughout the territory of the United States and have no effect in a foreign country, an inventor who wishes patent protection in another country must apply for a patent in a specific country or in regional patent offices. Applicants may wish to consider the filing of an international application under the Patent Cooperation Treaty (PCT). An international (PCT) application generally has the same effect as a regular national patent application in each PCT-member country. The PCT process **simplifies** the filing of patent applications on the same invention in member countries, but **does not result** in a grant of "an international patent" and does not eliminate the need of applicants to file additional documents and fees in countries where patent protection is desired.

Almost every country has its own patent law, and a person desiring a patent in a particular country must make an application for patent in that country in accordance with its particular laws. Since the laws of many countries differ in various respects from the patent law of the United States, applicants are advised to seek guidance from specific foreign countries to ensure that patent rights are not lost prematurely.

Applicants also are advised that in the case of inventions made in the United States, the Director of the USPTO must issue a license before applicants can apply for a patent in a foreign country. The filing of a U.S. patent application serves as a request for a foreign filing license. The application's filing receipt contains further information and guidance as to the status of applicant's license for foreign filing.

Applicants may wish to consult the USPTO booklet, "General Information Concerning Patents" (specifically, the section entitled "Treaties and Foreign Patents") for more information on timeframes and deadlines for filing foreign patent applications. The guide is available either by contacting the USPTO Contact Center at 800-786-9199, or it can be viewed on the USPTO website at http://www.uspto.gov/web/offices/pac/doc/general/index.html.

For information on preventing theft of your intellectual property (patents, trademarks and copyrights), you may wish to consult the U.S. Government website, http://www.stopfakes.gov. Part of a Department of Commerce initiative, this website includes self-help "toolkits" giving innovators guidance on how to protect intellectual property in specific countries such as China, Korea and Mexico. For questions regarding patent enforcement issues, applicants may call the U.S. Government hotline at 1-866-999-HALT (1-866-999-4158).

LICENSE FOR FOREIGN FILING UNDER

Title 35, United States Code, Section 184

Title 37, Code of Federal Regulations, 5.11 & 5.15

GRANTED

The applicant has been granted a license under 35 U.S.C. 184, if the phrase "IF REQUIRED, FOREIGN FILING LICENSE GRANTED" followed by a date appears on this form. Such licenses are issued in all applications where the conditions for issuance of a license have been met, regardless of whether or not a license may be required as set forth in 37 CFR 5.15. The scope and limitations of this license are set forth in 37 CFR 5.15(a) unless an earlier license has been issued under 37 CFR 5.15(b). The license is subject to revocation upon written notification. The date indicated is the effective date of the license, unless an earlier license of similar scope has been granted under 37 CFR 5.13 or 5.14.

This license is to be retained by the licensee and may be used at any time on or after the effective date thereof unless it is revoked. This license is automatically transferred to any related applications(s) filed under 37 CFR 1.53(d). This license is not retroactive.

The grant of a license does not in any way lessen the responsibility of a licensee for the security of the subject matter as imposed by any Government contract or the provisions of existing laws relating to espionage and the national security or the export of technical data. Licensees should apprise themselves of current regulations especially with respect to certain countries, of other agencies, particularly the Office of Defense Trade Controls, Department of State (with respect to Arms, Munitions and Implements of War (22 CFR 121-128)); the Bureau of Industry and Security, Department of Commerce (15 CFR parts 730-774); the Office of Foreign AssetsControl, Department of Treasury (31 CFR Parts 500+) and the Department of Energy.

NOT GRANTED

No license under 35 U.S.C. 184 has been granted at this time, if the phrase "IF REQUIRED, FOREIGN FILING LICENSE GRANTED" DOES NOT appear on this form. Applicant may still petition for a license under 37 CFR 5.12, if a license is desired before the expiration of 6 months from the filing date of the application. If 6 months has lapsed from the filing date of this application and the licensee has not received any indication of a secrecy order under 35 U.S.C. 181, the licensee may foreign file the application pursuant to 37 CFR 5.15(b).

UNITED STATES PATENT AND TRADEMARK OFFICE

COMMISSIONER FOR PATENTS
UNITED STATES PATENT AND TRADEMARK OFFICE
P.O. BOX 1450
ALEXANDRIA, VA 22313-1450
www.uspto.gov

Wan-Joo Kim,
Daejeon Yuseong
P.O. Box 35-5
Yuseong-gu, Daejeon 305-600
Republic of Korea.

MAILED
JAN 31 2011
OFFICE OF PETITIONS

In re Application of
Rhee, Lee, Kim, Min and Kim
Application No. 12/603,766
Filed: 10/22/2009
Attorney Docket No. EZP006
Title: FABRICATION METHOD OF TWO-TERMINAL SEMICONDUCTOR COMPONENT USING TRENCH TECHNOLOGY

LETTER

Dear Mr. Kim:

You are named as a joint inventor in the above identified United States patent application, filed under the provisions of 35 U.S.C. 116 (United States Code), and 37 CFR 1.47(a), Rules of Practice in Patent Cases. Should a patent be granted on the application you will be designated therein as a joint inventor.

As a named inventor you are entitled to inspect any paper in the file wrapper of the application, order copies of all or any part thereof (at a prepaid cost per 37 CFR 1.19) or make your position of record in the application. Alternatively, you may arrange to do any of the preceding through a registered patent attorney or agent presenting written authorization from you. If you care to join the application, counsel of record (see below) would presumably assist you. Joining in the application would entail the filing of an appropriate oath or declaration by you pursuant to 37 CFR 1.63.

Requests for information regarding your application should be directed to the File Information Unit at 571-272-3150. Information regarding how to pay for and order a copy of the application, or a specific paper in the application, should be directed to Certification Division at 571-272-3150 or 1-800-972-6382 (outside the Washington D.C. area).

Christina T. Donnell
Christina Tartera Donnell
Senior Petitions Attorney
Office of Petitions

GROSSMAN, TUCKER, PERREAULT & PFLEGER, PLLC
55 SOUTH COMMERICAL STREET
MANCHESTER NH 03101

UNITED STATES PATENT AND TRADEMARK OFFICE

UNITED STATES DEPARTMENT OF COMMERCE
United States Patent and Trademark Office
Address: COMMISSIONER FOR PATENTS
P.O. Box 1450
Alexandria, Virginia 22313-1450
www.uspto.gov

APPLICATION NO.	FILING DATE	FIRST NAMED INVENTOR	ATTORNEY DOCKET NO.	CONFIRMATION NO.
12/603,888	10/22/2009	Robert P. Morris	1300C/US	7432

49278 7590 01/24/2011
SCENERA RESEARCH, LLC
5400 Trinity Road
Suite 303
Raleigh, NC 27607

EXAMINER
YEN, SYLING

ART UNIT	PAPER NUMBER
2166	

MAIL DATE	DELIVERY MODE
01/24/2011	PAPER

Please find below and/or attached an Office communication concerning this application or proceeding.

The time period for reply, if any, is set in the attached communication.

UNITED STATES PATENT AND TRADEMARK OFFICE

Commissioner for Patents
United States Patent and Trademark Office
P.O. Box 1450
Alexandria, VA 22313-1450
www.uspto.gov

John A. Demons
SCENERA RESEARCH, LLC
5400 Trinity Road
Suite 303
Raleigh, North Carolina 27607

In re Application of: Robert P. MORRIS Appl. No.: 12/603,888 Filed: October 22, 2009 For: SYSTEM AND METHOD FOR TRACKING USER ACTIVITY RELATED TO NETWORK RESOURCES USING A BROWSER	DECISION ON PETITION UNDER 37 CFR § 1.103(a)

This is a decision on the petition for suspension of prosecutions under 37 CFR § 1.103(a) filed on 23 November 2010.

The petition is **GRANTED**.

Pursuant to applicant's requests filed on 23 November 2010, action by the Office is suspended on this application under 37 CFR § 1.103(a) for a period of ***three (3) months from the mailing date of this letter***. At the end of this period, applicant is required to notify the examiner and request continuance of prosecution or a further suspension. See MPEP § 709.

Suspension of action under 37 CFR § 1.103(a)-(d) at the applicant's request will cause a reduction in patent term adjustment accumulated (if any) under 37 CFR § 1.703. The reduction is equal to the number of days beginning on the date a request for suspension of action was filed and ending on the date of the termination of the suspension. See 37 CFR § 1.704(c)(1).

Any inquiry concerning this decision should be directed to the undersigned whose telephone number is (571) 272-3613.

/Vincent N. Trans/
Vincent N. Trans, SPRE/QAS
Technology Center 2100
Computer Architecture and Software

UNITED STATES PATENT AND TRADEMARK OFFICE

UNITED STATES DEPARTMENT OF COMMERCE
United States Patent and Trademark Office
Address: COMMISSIONER FOR PATENTS
P.O. Box 1450
Alexandria, Virginia 22313-1450
www.uspto.gov

APPLICATION NO.	FILING DATE	FIRST NAMED INVENTOR	ATTORNEY DOCKET NO.	CONFIRMATION NO.
12/603,888	10/22/2009	Robert P. Morris	1300C/US	7432

49278 7590 04/28/2011
SCENERA RESEARCH, LLC
5400 Trinity Road
Suite 303
Raleigh, NC 27607

EXAMINER
YEN, SYLING

ART UNIT	PAPER NUMBER
2166	

MAIL DATE	DELIVERY MODE
04/28/2011	PAPER

Please find below and/or attached an Office communication concerning this application or proceeding.

The time period for reply, if any, is set in the attached communication.

UNITED STATES PATENT AND TRADEMARK OFFICE

Commissioner for Patents
United States Patent and Trademark Office
P.O. Box 1450
Alexandria, VA 22313-1450
www.uspto.gov

John A. Demons
SCENERA RESEARCH, LLC
5400 Trinity Road
Suite 303
Raleigh, North Carolina 27607

In re Application of:
Robert P. MORRIS
Appl. No.: 11/192,489
Filed: July 07, 2005
For: METHOD AND SYSTEM FOR PROCESSING A WORKFLOW

DECISION ON PETITION UNDER 37 CFR § 1.103(a)

This is a decision on the petition for suspension of prosecutions under 37 CFR § 1.103(a) filed on 26 April 2011.

The petition is **GRANTED**.

Pursuant to applicant's requests filed on 26 April 2011, action by the Office is suspended on this application under 37 CFR § 1.103(a) for a period of ***three (3) months from the mailing date of this letter***. At the end of this period, applicant is required to notify the examiner and request continuance of prosecution or a further suspension. See MPEP § 709.

Suspension of action under 37 CFR § 1.103(a)-(d) at the applicant's request will cause a reduction in patent term adjustment accumulated (if any) under 37 CFR § 1.703. The reduction is equal to the number of days beginning on the date a request for suspension of action was filed and ending on the date of the termination of the suspension. See 37 CFR § 1.704(c)(1).

Any inquiry concerning this decision should be directed to the undersigned whose telephone number is (571) 272-3613.

/Vincent N. Trans/
Vincent N. Trans, SPRE/QAS
Technology Center 2100
Computer Architecture and Software

UNITED STATES PATENT AND TRADEMARK OFFICE

UNITED STATES DEPARTMENT OF COMMERCE
United States Patent and Trademark Office
Address: COMMISSIONER FOR PATENTS
P.O. Box 1450
Alexandria, Virginia 22313-1450
www.uspto.gov

APPLICATION NO.	FILING DATE	FIRST NAMED INVENTOR	ATTORNEY DOCKET NO.	CONFIRMATION NO.
12/603,888	10/22/2009	Robert P. Morris	1300C/US	7432

49278 7590 08/01/2011
SCENERA RESEARCH, LLC
5400 Trinity Road
Suite 303
Raleigh, NC 27607

EXAMINER
YEN, SYLING

ART UNIT	PAPER NUMBER
2166	

MAIL DATE	DELIVERY MODE
08/01/2011	PAPER

Please find below and/or attached an Office communication concerning this application or proceeding.

The time period for reply, if any, is set in the attached communication.

UNITED STATES PATENT AND TRADEMARK OFFICE

Commissioner for Patents
United States Patent and Trademark Office
P.O. Box 1450
Alexandria, VA 22313-1450
www.uspto.gov

John A. Demons
SCENERA RESEARCH, LLC
5400 Trinity Road
Suite 303
Raleigh, North Carolina 27607

In re Application of: Robert P. MORRIS Appl. No.: 12/603,888 Filed: October 22, 2009 For: SYSTEM AND METHOD FOR TRACKING USER ACTIVITY RELATED TO NETWORK RESOURCES USING A BROWSER	DECISION ON PETITION UNDER 37 CFR § 1.103(a)

This is a decision on the petition for suspension of prosecutions under 37 CFR § 1.103(a) filed on 27 July 2011.

The petition is **GRANTED**.

Pursuant to applicant's requests filed on 27 July 2011, action by the Office is suspended on this application under 37 CFR § 1.103(a) for a period of ***three (3) months from the mailing date of this letter***. At the end of this period, applicant is required to notify the examiner and request continuance of prosecution or a further suspension. See MPEP § 709.

Suspension of action under 37 CFR § 1.103(a)-(d) at the applicant's request will cause a reduction in patent term adjustment accumulated (if any) under 37 CFR § 1.703. The reduction is equal to the number of days beginning on the date a request for suspension of action was filed and ending on the date of the termination of the suspension. See 37 CFR § 1.704(c)(1).

Any inquiry concerning this decision should be directed to the undersigned whose telephone number is (571) 272-3613.

/Vincent N. Trans/
Vincent N. Trans, SPRE/QAS
Technology Center 2100
Computer Architecture and Software

UNITED STATES PATENT AND TRADEMARK OFFICE

UNITED STATES DEPARTMENT OF COMMERCE
United States Patent and Trademark Office
Address: COMMISSIONER FOR PATENTS
P.O. Box 1450
Alexandria, Virginia 22313-1450
www.uspto.gov

APPLICATION NO.	FILING DATE	FIRST NAMED INVENTOR	ATTORNEY DOCKET NO.	CONFIRMATION NO.
12/603,888	10/22/2009	Robert P. Morris	1300C/US	7432

49278 7590 11/04/2011
SCENERA RESEARCH, LLC
5400 Trinity Road
Suite 303
Raleigh, NC 27607

EXAMINER
YEN, SYLING

ART UNIT	PAPER NUMBER
2166	

MAIL DATE	DELIVERY MODE
11/04/2011	PAPER

Please find below and/or attached an Office communication concerning this application or proceeding.

The time period for reply, if any, is set in the attached communication.

UNITED STATES PATENT AND TRADEMARK OFFICE

Commissioner for Patents
United States Patent and Trademark Office
P.O. Box 1450
Alexandria, VA 22313-1450
www.uspto.gov

John A. Demons
SCENERA RESEARCH, LLC
5400 Trinity Road
Suite 303
Raleigh, North Carolina 27607

In re Application of: Robert P. MORRIS Appl. No.: 12/603,888 Filed: October 22, 2009 For: SYSTEM AND METHOD FOR TRACKING USER ACTIVITY RELATED TO NETWORK RESOURCES USING A BROWSER	DECISION ON PETITION UNDER 37 CFR § 1.103(a)

This is a decision on the petition for suspension of prosecutions under 37 CFR § 1.103(a) filed on 01 November 2011.

The petition is **GRANTED**.

Pursuant to applicant's requests filed on 01 November 2011, action by the Office is suspended on this application under 37 CFR § 1.103(a) for a period of ***three (3) months from the mailing date of this letter***. At the end of this period, applicant is required to notify the examiner and request continuance of prosecution or a further suspension. See MPEP § 709.

Suspension of action under 37 CFR § 1.103(a)-(d) at the applicant's request will cause a reduction in patent term adjustment accumulated (if any) under 37 CFR § 1.703. The reduction is equal to the number of days beginning on the date a request for suspension of action was filed and ending on the date of the termination of the suspension. See 37 CFR § 1.704(c)(1).

Any inquiry concerning this decision should be directed to the undersigned whose telephone number is (571) 272-3613.

/Vincent N. Trans/
Vincent N. Trans, SPRE/QAS
Technology Center 2100
Computer Architecture and Software

UNITED STATES PATENT AND TRADEMARK OFFICE

UNITED STATES DEPARTMENT OF COMMERCE
United States Patent and Trademark Office
Address: COMMISSIONER FOR PATENTS
P.O. Box 1450
Alexandria, Virginia 22313-1450
www.uspto.gov

APPLICATION NO.	FILING DATE	FIRST NAMED INVENTOR	ATTORNEY DOCKET NO.	CONFIRMATION NO.
12/603,888	10/22/2009	Robert P. Morris	1300C/US	7432

49278 7590 02/13/2012
SCENERA RESEARCH, LLC
5400 Trinity Road
Suite 303
Raleigh, NC 27607

EXAMINER
YEN, SYLING

ART UNIT	PAPER NUMBER
2166	

MAIL DATE	DELIVERY MODE
02/13/2012	PAPER

Please find below and/or attached an Office communication concerning this application or proceeding.

The time period for reply, if any, is set in the attached communication.

UNITED STATES PATENT AND TRADEMARK OFFICE

Commissioner for Patents
United States Patent and Trademark Office
P.O. Box 1450
Alexandria, VA 22313-1450
www.uspto.gov

John A. Demons
SCENERA RESEARCH, LLC
5400 Trinity Road
Suite 303
Raleigh, North Carolina 27607

In re Application of: Robert P. MORRIS Appl. No.: 12/603,888 Filed: October 22, 2009 For: SYSTEM AND METHOD FOR TRACKING USER ACTIVITY RELATED TO NETWORK RESOURCES USING A BROWSER	DECISION ON PETITION UNDER 37 CFR § 1.103(a)

This is a decision on the petition for suspension of prosecutions under 37 CFR § 1.103(a) filed on 07 February 2012.

The petition is **GRANTED**.

Pursuant to applicant's requests filed on 07 February 2012, action by the Office is suspended on this application under 37 CFR § 1.103(a) for a period of ***three (3) months from the mailing date of this letter***. At the end of this period, applicant is required to notify the examiner and request continuance of prosecution or a further suspension. See MPEP § 709.

Suspension of action under 37 CFR § 1.103(a)-(d) at the applicant's request will cause a reduction in patent term adjustment accumulated (if any) under 37 CFR § 1.703. The reduction is equal to the number of days beginning on the date a request for suspension of action was filed and ending on the date of the termination of the suspension. See 37 CFR § 1.704(c)(1).

Any inquiry concerning this decision should be directed to the undersigned whose telephone number is (571) 272-3613.

/Vincent N. Trans/
Vincent N. Trans, QAS
Technology Center 2100
Computer Architecture and Software

UNITED STATES PATENT AND TRADEMARK OFFICE

Commissioner for Patents
United States Patent and Trademark Office
P.O. Box 1450
Alexandria, VA 22313-1450
www.uspto.gov

MORGAN LEWIS & BOCKIUS LLP
1111 PENNSYLVANIA AVENUE NW
WASHINGTON DC 20004

MAILED

SEP 23 2010

OFFICE OF PETITIONS

NOTICE

In re Application: :
Masahito Hisada et al. :
Application No. 12/603,895 :
Filed: October 22, 2009 :
Attorney Docket No. 040894-7815 :

This is a notice regarding your request for acceptance of a fee deficiency submission under 37 CFR 1.28 filed July 26, 2010. On September 1, 1998, the Court of Appeals for the Federal Circuit held that 37 CFR 1.28(c) is the sole provision governing the time for correction of the erroneous payment of the issue fee as a small entity. **See DH Technology v. Synergystex International, Inc. 154 F.3d 1333, 47 USPQ2d 1865 (Fed. Cir. Sept. 1, 1998).**

The Office no longer investigates or rejects original or reissue applications under 37 CFR 1.56. **1098 Off. Gaz. Pat. Office 502 (January 3, 1989).** Therefore, nothing in this Notice is intended to imply that an investigation was done.

Your fee deficiency submission under 37 CFR 1.28 is hereby accepted. The petition is **GRANTED**.

This application is no longer entitled to small entity status. Accordingly, all future fees paid in this application must be paid at the large entity rate.

This file is being forwarded to Technology Center 3656 for further processing.

Telephone inquiries related to this decision should be directed to the Kimberly Inabinet at (571) 272-4618.

/Kimberly Inabinet/

Kimberly Inabinet
Petitions Examiner
Office of Petitions

UNITED STATES PATENT AND TRADEMARK OFFICE

Commissioner for Patents
United States Patent and Trademark Office
P.O. Box 1450
· Alexandria, VA 22313-1450
www.uspto.gov

TOWNSEND AND TOWNSEND AND CREW LLP
TWO EMBARCADERO CENTER
8TH FLOOR
SAN FRANCISCO CA 94111-3834

MAILED
OCT 18 2010
OFFICE OF PETITIONS

In re Application:	:	
Emmett M. Kilgariff et al.	:	
Application No. 12/603,903	:	NOTICE
Filed: October 22, 2009	:	
Attorney Docket No. 019680-010610US	:	

This is a notice regarding your request for acceptance of a fee deficiency submission under 37 CFR 1.28 filed November 30, 2009. On September 1, 1998, the Court of Appeals for the Federal Circuit held that 37 CFR 1.28(c) is the sole provision governing the time for correction of the erroneous payment of the issue fee as a small entity. **See DH Technology v. Synergystex International, Inc. 154 F.3d 1333, 47 USPQ2d 1865 (Fed. Cir. Sept. 1, 1998).**

The Office no longer investigates or rejects original or reissue applications under 37 CFR 1.56. **1098 Off. Gaz. Pat. Office 502 (January 3, 1989)**. Therefore, nothing in this Notice is intended to imply that an investigation was done.

Your fee deficiency submission under 37 CFR 1.28 is hereby accepted. The petition is **GRANTED**.

This application is no longer entitled to small entity status. Accordingly, all future fees paid in this application must be paid at the large entity rate.

This file is being forwarded to the Technology Center 2628.

Telephone inquiries related to this decision should be directed to the Kimberly Inabinet at (571) 272-4618.

/Carl Friedman/
Carl Friedman
Petitions Examiner
Office of Petitions

UNITED STATES PATENT AND TRADEMARK OFFICE

Commissioner for Patents
United States Patent and Trademark Office
P.O. Box 1450
Alexandria, VA 22313-1450
www.uspto.gov

Decision Date : February 3, 2012

In re Application of :

Alan Sliski

DECISION ON PETITION

UNDER CFR 1.313(c)(2)

Application No : 12603934

Filed : 22-Oct-2009

Attorney Docket No : 3773.1000-011

This is an electronic decision on the petition under 37 CFR 1.313(c)(2), filed February 3, 2012 , to withdraw the above-identified application from issue after payment of the issue fee.

The petition is **GRANTED.**

The above-identified application is withdrawn from issue for consideration of a submission under 37 CFR 1.114 (request for continued examination). See 37 CFR 1.313(c)(2).

Petitioner is advised that the issue fee paid in this application cannot be refunded. If, however, this application is again allowed, petitioner may request that it be applied towards the issue fee required by the new Notice of Allowance.

Telephone inquiries concerning this decision should be directed to the Patent Electronic Business Center (EBC) at 866-217-9197.

This application file is being referred to Technology Center AU 2821 for processing of the request for continuing examination under 37 CFR 1.114 .

Office of Petitions

Doc Code: PET.AUTO Document Description: Petition automatically granted by EFS-Web	PTO/SB/140 U.S. Patent and Trademark Office Department of Commerce

Electronic Petition Request	**PETITION TO WITHDRAW AN APPLICATION FROM ISSUE AFTER PAYMENT OF THE ISSUE FEE UNDER 37 CFR 1.313(c)**
Application Number	12603934
Filing Date	22-Oct-2009
First Named Inventor	Alan Sliski
Art Unit	2821
Examiner Name	TUNG LE
Attorney Docket Number	3773.1000-011
Title	PROGRAMMABLE RADIO FREQUENCY WAVEFORM GENERATOR FOR A SYNCHROCYCLOTRON

An application may be withdrawn from issue for further action upon petition by the applicant. To request that the Office withdraw an application from issue, applicant must file a petition under this section including the fee set forth in § 1.17(h) and a showing of good and sufficient reasons why withdrawal of the application from issue is necessary.

APPLICANT HEREBY PETITIONS TO WITHDRAW THIS APPLICATION FROM ISSUE UNDER 37 CFR 1.313(c).

A grantable petition requires the following items:
(1) Petition fee; and
(2) One of the following reasons:
(a) Unpatentability of one or more claims, which must be accompanied by an unequivocal statement that one or more claims are unpatentable, an amendment to such claim or claims, and an explanation as to how the amendment causes such claim or claims to be patentable;
(b) Consideration of a request for continued examination in compliance with § 1.114 (for a utility or plant application only); or
(c) Express abandonment of the application. Such express abandonment may be in favor of a continuing application, but not a CPA under 37 CFR 1.53(d).

Petition Fee

- ☐ Applicant claims SMALL ENTITY status. See 37 CFR 1.27.
- ☐ Applicant is no longer claiming SMALL ENTITY status. See 37 CFR 1.27(g)(2).
- ☐ Applicant(s) status remains as SMALL ENTITY.
- ☒ Applicant(s) status remains as other than SMALL ENTITY

Reason for withdrawal from issue

○ One or more claims are unpatentable

◉ Consideration of a request for continued examination (RCE) (List of Required Documents and Fees)

○ Applicant hereby expressly abandons the instant application (any attorney/agent signing for this reason must have power of attorney pursuant to 37 CFR 1.32(b)).

RCE request,submission, and fee.

☐ I certify, in accordance with 37 CFR 1.4(d)(4) that : The RCE request ,submission, and fee have already been filed in the above-identified application on

☒ Are attached.

THIS PORTION MUST BE COMPLETED BY THE SIGNATORY OR SIGNATORIES

I certify, in accordance with 37 CFR 1.4(d)(4) that I am:

◉ An attorney or agent registered to practice before the Patent and Trademark Office who has been given power of attorney in this application.

○ An attorney or agent registered to practice before the Patent and Trademark Office, acting in a representative capacity.

○ A sole inventor

○ A joint inventor; I certify that I am authorized to sign this submission on behalf of all of the inventors

○ A joint inventor; all of whom are signing this e-petition

○ The assignee of record of the entire interest that has properly made itself of record pursuant to 37 CFR 3.71

Signature	/Alexander Akhiezer/
Name	Alexander Akhiezer
Registration Number	54617

UNITED STATES PATENT AND TRADEMARK OFFICE

Commissioner for Patents
United States Patent and Trademark Office
P.O. Box 1450
Alexandria, VA 22313-1450
www.uspto.gov

RICHARD R. PETERS
800 Redwood Hwy Ste. 616 #196
Mill Valley CA 94941

MAILED
AUG 24 2011
OFFICE OF PETITIONS

In re Application of	:	
Amanda Leigh Stapleford	:	
Application No. 12/604,032	:	DECISION ON PETITION
Filed: October 22, 2009	:	TO WITHDRAW
Attorney Docket No. 0004.0001	:	FROM RECORD
	:	

This is a decision on the Request to Withdraw as attorney or agent of record under 37 C.F.R. § 1.36(b), filed August 11, 2011.

The request is **not approved. Request is moot.**

The Office will no longer approve requests from practitioners to withdraw from applications where the requesting practitioner is acting, or has acted, in a representative capacity pursuant to 37 CFR 1.34. In these situations, the practitioner is responsible for the correspondence the practitioner files in the application while acting in a representative capacity. As such, there is no need for the practitioner to obtain the Office's permission to withdraw from representation. However, practitioners acting in a representative capacity, like practitioners who have a power of attorney in the application, remain responsible for noncompliance with 37 CFR 1.56, as well as 37 CFR 10.18, with respect to documents they file.

A review of the file record indicates that Richard R. Peters and all attorneys/agents associated with customer number 89862 do not have power of attorney, but has acted in a representative capacity in this patent application. See 37 C.F.R. § 10.40. Accordingly, the request to withdraw under 37 C.F.R. § 1.36(b) is not applicable.

The correspondence address has been changed and is copied below.

Telephone inquires concerning this decision should be directed to the undersigned at 571-272-4618

/Kimberly Inabinet/

Kimberly Inabinet
Petitions Examiner
Office of Petitions

cc: Amanda Leigh Stapleford
P.O. Box 477
Arroyo Seco, NM 87514

UNITED STATES PATENT AND TRADEMARK OFFICE

Commissioner for Patents
United States Patent and Trademark Office
P.O. Box 1450
Alexandria, VA 22313-1450
www.uspto.gov

ALLERGAN, INC.
2525 DUPONT DRIVE, T2-7H
IRVINE, CA 92612-1599

MAILED
MAR 24 2011
OFFICE OF PETITIONS

Applicant: Thomas et al.
Appl. No.: 12/604,084
Filing Date: October 22, 2009
Title: CLINICAL ASSESSMENT SCALES AND METHODS
Attorney Docket: 18475 (FAC)
Pub. No.: US 2010/0127747 A1
Pub. Date: June 3, 2010

This is a decision on the request for a corrected patent application publication under 37 CFR 1.221(b), received on July 13, 2010, for the above-identified application.

The request is granted.

The corrected patent application publication will be published in due course, unless the patent issues before the application is republished.

A guide for filing a request for a Pre-Grant Publication, such as a request for republication, may be found on the link below:

http://www.uspto.gov/patents/process/file/efs/guidance/index.jsp
OR
http://www.uspto.gov/ebc/portal/efs/pgpub_quickstart.pdf

Any request for republication under 37 CFR 1.221(a), must be submitted via the EFS system, as a "Pre-Grant Publication."

Inquiries relating to this matter may be directed to Mark Polutta at (571) 272-7709.

Mark Polutta
Senior Legal Advisor
Office of Patent Legal Administration
Office of the Deputy Commissioner
for Patent Examination Policy

UNITED STATES PATENT AND TRADEMARK OFFICE

Commissioner for Patents
United States Patent and Trademark Office
P.O. Box 1450
Alexandria, VA 22313-1450
www.uspto.gov

WOODCOCK WASHBURN LLP (MICROSOFT CORPORATION)
CIRA CENTRE, 12TH FLOOR
2929 ARCH STREET
PHILADELPHIA, PA 19104-2891

MAILED

JAN 20 2011

OFFICE OF PETITIONS

In re Application of :
Charles N. Boyd et al :
Application No. 12/604,102 : ON PETITION
Filed: October 22, 2009 :
Attorney Docket No. MSFT-6636/150582.06

This is a decision on the petition, filed January 19, 2011 under 37 CFR 1.313(c)(2) to withdraw the above-identified application from issue after payment of the issue fee.

The petition is **GRANTED**.

The above-identified application is withdrawn from issue for consideration of a submission under 37 CFR 1.114 (request for continued examination). See 37 CFR 1.313(c)(2).

Petitioner is advised that the issue fee paid on January 11, 2011 in the above-identified application cannot be refunded. If, however, the above-identified application is again allowed, petitioner may request that it be applied towards the issue fee required by the new Notice of Allowance.[1]

Telephone inquiries should be directed to Irvin Dingle at (571) 272-3210.

This matter is being referred to Technology Center AU 2628 for processing of the request for continued examination under 37 CFR 1.114 and for consideration of the concurrently filed Information Disclosure Statement.

/Irvin Dingle/
Irvin Dingle
Petitions Examiner
Office of Petitions

---

[1] The request to apply the issue fee to the new Notice may be satisfied by completing and returning the new Issue Fee Transmittal Form PTOL-85(b), which includes the following language thereon: Commissioner for Patents is requested to apply the Issue Fee and Publication Fee (if any) or re-apply any previously paid issue fee to the application identified above. Petitioner is advised that, whether a fee is indicated as being due or not, the Issue Fee Transmittal Form **must** be completed and timely submitted to avoid abandonment. Note the language in bold text on the first page of the Notice of Allowance and Fee(s) Due (PTOL-85).

UNITED STATES PATENT AND TRADEMARK OFFICE

Commissioner for Patents
United States Patent and Trademark Office
P.O. Box 1450
Alexandria, VA 22313-1450
www.uspto.gov
DIW Jun-11

CHOATE, HALL & STEWART LLP/MSKCC
SLOAN-KETTERING INSTITUTE FOR CANCER RESEARCH
TWO INTERNATIONAL PLACE
BOSTON MA 02110

MAILED
JUN 29 2011
OFFICE OF PETITIONS

In re Application of	:	
Danishefsky et al.	:	DECISION ON PETITION TO
Application Number: 12/604,127	:	WITHDRAW HOLDING OF
Filing Date: 10/22/2009	:	ABANDONMENT
Attorney Docket Number:	:	
2003080-0330 US CON2 (SK	:	

This is a decision on the "PETITION TO WITHDRAW HOLDING OF ABANDONMENT UNDER 37 USC §1.181(A)," filed on June 6, 2011.

The petition is **GRANTED**.

A Notice of Abandonment was mailed on June 3, 2011, stating that the application was abandoned for failure to timely file a reply to the non-final Office action mailed on December 28, 2010.

On June 6, 2011, the subject petition was filed.

On June 23, 2011, subsequent to the filing of the subject petition, an amendment and a three (3) month extension of time were filed.

Petitioners assert that the maximum extendable period to reply to the non-final Office action runs until June 28, 2011.

Upon review, petitioners are correct. On December 28, 2010, a non-final Office action was mailed, setting a three (3)-month shortened statutory period for reply. A reply, including a three (3) month extension of time, was timely filed on June 23, 2011. Accordingly, the application did not become abandoned for failure to timely respond to the non-final Office action mailed on December 28, 2010.

The Office apologizes for any inconvenience to petitioners.

The holding of abandonment is withdrawn. The Notice of Abandonment is vacated.

The application is referred to Technology Center Art Unit 1626 for further processing.

Telephone inquiries concerning this matter may be directed to the undersigned at (571)272-3231.

D Wood

Douglas I. Wood
Senior Petitions Attorney
Office of Petitions

PTO/SB/20PCT-KR (06-10)
Approved for use through 01/31/2012. OMB 0651-0058
U.S. Patent and Trademark Office; U. S. DEPARTMENT OF COMMERCE
Under the Paperwork Reduction Act of 1995, no persons are required to respond to a collection of information unless it displays a valid OMB control number.

REQUEST FOR PARTICIPATION IN THE PATENT COOPERATION TREATY - PATENT PROSECUTION HIGHWAY (PCT-PPH) PILOT PROGRAM BETWEEN THE KOREAN INTELLECTUAL PROPERTY OFFICE (KIPO) AND THE USPTO

Application No:	12/604132	Filing date:	2009-10-22
First Named Inventor:	A. Joaquin		
Title of the Invention:	MODULAR TUBULAR-SOCK GARDEN GROWING SYSTEM		

THIS REQUEST FOR PARTICIPATION IN THE PCT-PPH PILOT PROGRAM ALONG WITH THE REQUIRED DOCUMENTS MUST BE SUBMITTED VIA EFS-WEB. INFORMATION REGARDING EFS-WEB IS AVAILABLE AT HTTP://WWW.USPTO.GOV/EBC/EFS_HELP.HTML

APPLICANT HEREBY REQUESTS PARTICIPATION IN THE PCT-PPH PROGRAM AND PETITIONS TO MAKE THE ABOVE-IDENTIFIED APPLICATION SPECIAL UNDER THE PCT-PPH PROGRAM.

The above-identified application is (1) a national stage entry of the corresponding PCT application, or (2) a national stage entry of another PCT application which claims priority to the corresponding PCT application, or (3) a national application that claims domestic/ foreign priority to the corresponding PCT application, or (4) a national application which forms the basis for the priority claim in the corresponding PCT application, or (5) a continuing application of a U.S. application that satisfies one of (1) to (4) above, or (6) a U.S. application that claims domestic benefit to a U.S. provisional application which forms the basis for the priority claim in the corresponding PCT application.

The corresponding PCT application number(s) is/are: US2010/052345

The international filing date of the corresponding PCT application(s) is/are: 2010-10-12

I. List of Required Documents:

a. **A copy of the latest international work product (WO/ISA, WO/IPEA, or IPER) in the above–identified corresponding PCT application(s)**

- [✓] Is attached.
- [ ] Is not attached because the document is already in the U.S. application.

b. **A copy of all claims which were indicated as having novelty, inventive step and industrial applicability in the above-identified corresponding PCT application(s).**

- [ ] Is attached.
- [ ] Is not attached because the document is already in the U.S. application.

c. **English translations of the documents in a. and b. above are attached (if the documents are not in the English language). A statement that the English translation is accurate is attached for the document in b. above.**

This collection of information is required by 35 U.S.C. 119, 37 CFR 1.55, and 37 CFR 1.102(d). The information is required to obtain or retain a benefit by the public, which is to file (and by the USPTO to process) an application. Confidentiality is governed by 35 U.S.C. 122 and 37 CFR 1.11 and 1.14. This collection is estimated to take 2 hours to complete, including gathering, preparing, and submitting the completed application form to the USPTO. Time will vary depending upon the individual case. Any comments on the amount of time you require to complete this form and/or suggestions for reducing this burden should be sent to the Chief Information Officer, U.S. Patent and Trademark Office, U.S. Department of Commerce, P.O. Box 1450, Alexandria, VA 22313-1450. DO NOT SEND FEES OR COMPLETED FORMS TO THIS ADDRESS.

Approved for use through 01/31/2012. OMB 0651-0058
U.S.Patent and Trademark Office; U.S. DEPARTMENT OF COMMERCE
Under the Paperwork Reduction Act of 1995, no persons are required to respond to a collection of information unless it displays a valid OMB control number.

REQUEST FOR PARTICIPATION IN THE PCT-PPH PILOT PROGRAM BETWEEN THE KIPO AND THE USPTO

(continued)

Application No.:	12/604132
First Named Inventor:	A. Joaquin

d. **(1) An information disclosure statement listing the documents cited in the international work products (ISR, WO/ISA, WO/IPEA, IPER) of the corresponding PCT application.**

[✓] Is attached

[ ] Has already been filed in the above-identified U.S. application on _____

(2) Copies of all documents (except) for U.S. patents or U.S. patent application publications)

[✓] Are attached.

[ ] Have already been filed in the above-identified U.S. application on _____

II. Claims Correspondence Table:

Claims in US Application	Patentable Claims in the corresponding PCT Application	Explanation regarding the correspondence
1-20	1-20	The same claims were submitted in the U.S. and PCT cases

III. All the claims in the US application sufficiently correspond to the patentable claims in the corresponding PCT application.

Signature Leighton K Chong	Date 2011-08-23
Name (Print/Typed) Leighton K. Chong	Registration Number 27,621

PATENT COOPERATION TREATY

From the INTERNATIONAL SEARCHING AUTHORITY

To:

CHONG LEIGHTON

133 KAAI STREET HONOLULU HI 96821 USA

PCT

NOTIFICATION OF TRANSMITTAL OF THE INTERNATIONAL SEARCH REPORT AND THE WRITTEN OPINION OF THE INTERNATIONAL SEARCHING AUTHORITY, OR THE DECLARATION

(PCT Rule 44.1)

	Date of mailing *(day/month/year)* 23 JUNE 2011 (23.06.2011)
Applicant's or agent's file reference BIO-P1-PCT	**FOR FURTHER ACTION** See paragraphs 1 and 4 below
International application No. **PCT/US2010/052345**	International filing date *(day/month/year)* **12 OCTOBER 2010 (12.10.2010)**
Applicant **THE WIKI GARDEN INC.**	

1. ☒ The applicant is hereby notified that the international search report and the written opinion of the International Searching Authority have been established and are transmitted herewith.
Filing of amendments and statement under Article 19:
The applicant is entitled, if he so wishes, to amend the claims of the international application (see Rule 46):
When? The time limit for filing such amendments is normally two months from the date of transmittal of the international search report.
Where? Directly to the International Bureau of WIPO, 34 chemin des Colombettes 1211 Geneva 20, Switzerland, Facsimile No.: +41 22 338 82 70
For more detailed instructions, see *PCT Applicant's Guide*, International Phase, paragraphs 9.004 . 9.011.

2. ☐ The applicant is hereby notified that no international search report will be established and that the declaration under Article 17(2)(a) to that effect and the written opinion of the International Searching Authority are transmitted herewith.

3. ☐ **With regard to any protest** against payment of (an) additional fee(s) under Rule 40.2, the applicant is notified that:
☐ the protest together with the decision thereon has been transmitted to the International Bureau together with any request to forward the texts of both the protest and the decision thereon to the designated Offices.
☐ no decision has been made yet on the protest; the applicant will be notified as soon as a decision is made.

4. **Reminders**
The applicant may submit comments on an informal basis on the written opinion of the International Searching Authority to the International Bureau. The International Bureau will send a copy of such comments to all designated Offices unless an international preliminary examination report has been or is to be established. Following the expiration of 30 months from the priority date, these comments will also be made available to the public.

Shortly after the expiration of **18 months** from the priority date, the international application will be published by the International Bureau. If the applicant wishes to avoid or postpone publication, a notice of withdrawal of the international application, or of the priority claim, must reach the International Bureau before the completion of the technical preparations for international publication (Rules 90bis.1 and 90bis.3).

Within **19 months** from the priority date, but only in respect of some designated Offices, a demand for international preliminary examination must be filed if the applicant wishes to postpone the entry into the national phase **until 30 months** from the priority date (in some Offices even later); otherwise, the applicant must, **within 20 months** from the priority date, perform the prescribed acts for entry into the national phase before those designated Offices.
In respect of other designated Offices, the time limit of **30 months** (or later) will apply even if no demand is filed within 19months.

For details about the applicable time limits, Office by Office, see www.wipo.int/pct/en/texts/time_limits.html and the PCT Applicant's Guide, National Chapters.

Name and mailing address of the ISA/KR Korean Intellectual Property Office Government Complex-Daejeon, 189 Cheongsa-ro, Seo-gu, Daejeon 302-701, Republic of Korea Facsimile No. 82-42-472-7140	Authorized officer COMMISSIONER Telephone No. 82-42-481-8753

* Attention

Copies of the documents cited in the international search report can be searched in the following Korean Intellectual Property Office English website for three months from the date of mailing of the international search report.

http://www.kipo.go.kr/en/ => PCT Services => PCT Services

ID : PCT international application number
PW : **FVSQ1YLJ**

Inquiries related to PCT International Search Report or Written Opinion prepared by KIPO as an International Searching Authority can be answered not only by KIPO but also through IPKC (Intellectual Property Korea Center), located in Vienna, VA, which functions as a PCT Help Desk for PCT applicants.

Homepage: http://www.ipkcenter.com
Email: ipkc@ipkcenter.com
Phone: +1 703 388 1066
Fax: +1 703 388 1084

PATENT COOPERATION TREATY

PCT

INTERNATIONAL SEARCH REPORT

(PCT Article 18 and Rules 43 and 44)

Applicant's or agent's file reference BIO-P1-PCT	**FOR FURTHER ACTION**	see Form PCT/ISA/220 as well as, where applicable, item 5 below.
International application No. **PCT/US2010/052345**	International filing date *(day/month/year)* **12 OCTOBER 2010 (12.10.2010)**	(Earliest) Priority Date *(day/month/year)* 22 OCTOBER 2009 (22.10.2009)
Applicant **THE WIKI GARDEN INC.**		

This International search report has been prepared by this International Searching Authority and is transmitted to the applicant according to Article 18. A copy is being transmitted to the International Bureau.

This international search report consists of a total of 3 sheets.

☐ It is also accompanied by a copy of each prior art document cited in this report.

1. **Basis of the report**
   a. With regard to the **language**, the international search was carried out on the basis of:
      ☒ the international application in the language in which it was filed
      ☐ a translation of the international application into _____, which is the language of a translation furnished for the purposes of international search (Rules 12.3(a) and 23.1(b))
   b. ☐ This international search report has been established taking into account the **rectification of an obvious mistake** authorized by or notified to this Authority under Rule 91 (Rule 43.6*bis*(a)).
   c. ☐ With regard to any **nucleotide and/or amino acid sequence** disclosed in the international application, see Box No. I.
2. ☐ **Certain claims were found unsearchable** (See Box No. II)
3. ☐ **Unity of invention is lacking** (See Box No. III)
4. With regard to the **title,**
   ☒ the text is approved as submitted by the applicant.
   ☐ the text has been established by this Authority to read as follows:
5. With regard to the **abstract,**
   ☒ the text is approved as submitted by the applicant.
   ☐ the text has been established, according to Rule 38.2, by this Authority as it appears in Box No. IV. The applicant may, within one month from the date of mailing of this international search report, submit comments to this Authority.
6. With regard to the drawings,
   a. the figure of the **drawings** to be published with the abstract is Figure No. 1
      ☒ as suggested by the applicant.
      ☐ as selected by this Authority, because the applicant failed to suggest a figure.
      ☐ as selected by this Authority, because this figure better characterizes the invention.
   b. ☐ none of the figure is to be published with the abstract.

INTERNATIONAL SEARCH REPORT

International application No.
PCT/US2010/052345

A. CLASSIFICATION OF SUBJECT MATTER

A01G 1/00(2006.01)i, A01G 25/00(2006.01)i, C05G 1/00(2006.01)i, C05F 15/00(2006.01)i, A01G 9/10(2006.01)i

According to International Patent Classification (IPC) or to both national classification and IPC

B. FIELDS SEARCHED

Minimum documentation searched (classification system followed by classification symbols)
A01G 1/00; G09B 25/00; A01G 25/00; A01G 27/04

Documentation searched other than minimum documentation to the extent that such documents are included in the fields searched
Korean utility models and applications for utility models
Japanese utility models and applications for utility models

Electronic data base consulted during the international search (name of data base and, where practicable, search terms used)
eKOMPASS(KIPO internal) & Keywords

C. DOCUMENTS CONSIDERED TO BE RELEVANT

Category*	Citation of document, with indication, where appropriate, of the relevant passages	Relevant to claim No.
A	US 2008-0035753 A1 (Leoanrd Frederick Sheldrake) 14 February 2008 See paragraph 17 - paragraph 26, figs. 2-3	1-20
A	US 2008-0155892 A1 (KATZIR-SHIMONI ALON et al.) 03 July 2008 See abstract, fig. 1	1-20
A	US 2008-0041978 A1 (RON KEREN) 21 February 2008 See cliams 1, 16, figs. 2A-2C	1-20
A	EP 0538242 B1 (Chapin, Richard Dexter) 25 November 1998 See abstract	1-20

☐ Further documents are listed in the continuation of Box C. ☒ See patent family annex.

* Special categories of cited documents:
"A" document defining the general state of the art which is not considered to be of particular relevance
"E" earlier application or patent but published on or after the international filing date
"L" document which may throw doubts on priority claim(s) or which is cited to establish the publication date of citation or other special reason (as specified)
"O" document referring to an oral disclosure, use, exhibition or other means
"P" document published prior to the international filing date but later than the priority date claimed
"T" later document published after the international filing date or priority date and not in conflict with the application but cited to understand the principle or theory underlying the invention
"X" document of particular relevance; the claimed invention cannot be considered novel or cannot be considered to involve an inventive step when the document is taken alone
"Y" document of particular relevance; the claimed invention cannot be considered to involve an inventive step when the document is combined with one or more other such documents,such combination being obvious to a person skilled in the art
"&" document member of the same patent family

Date of the actual completion of the international search	Date of mailing of the international search report
22 JUNE 2011 (22.06.2011)	**23 JUNE 2011 (23.06.2011)**
Name and mailing address of the ISA/KR Korean Intellectual Property Office Government Complex-Daejeon, 189 Cheongsa-ro, Seo-gu, Daejeon 302-701, Republic of Korea Facsimile No. 82-42-472-7140	Authorized officer KIM, Jae Hyun Telephone No. 82-42-481-5626

Form PCT/ISA/210 (second sheet) (July 2009)

INTERNATIONAL SEARCH REPORT

Information on patent family members

International application No.

PCT/US2010/052345

Patent document cited in search report	Publication date	Patent family member(s)	Publication date
US 2008-0035753 A1	14.02.2008	AU 2005-256169 A1	05.01.2006
		CA 2571657 A1	05.01.2006
		CN 1972592 A	30.05.2007
		CN 1972592 C0	30.05.2007
		EP 1765055 A1	28.03.2007
		JP 2008-503225 A	07.02.2008
		JP 2008-503225 T	07.02.2008
		US 7681356 B2	23.03.2010
		WO 2006-000048 A1	05.01.2006
US 2008-0155892 A1	03.07.2008	DE 202006019527 U1	08.05.2008
US 2008-0041978 A1	21.02.2008	AR062407A1	05.11.2008
		AU 2007-285343 A1	21.02.2008
		AU 2007-285343 A1	21.02.2008
		EP 2051579 A1	29.04.2009
		IL177552D0	10.12.2006
		MX 2009000773 A	31.03.2009
		WO 2008-020445 A1	21.02.2008
		ZA200900343A	28.04.2010
EP 0538242 B1	25.11.1998	None	

PATENT COOPERATION TREATY

From the
INTERNATIONAL SEARCHING AUTHORITY

To:
CHONG LEIGHTON

133 KAAI STREET HONOLULU HI 96821 USA

PCT

WRITTEN OPINION OF THE INTERNATIONAL SEARCHING AUTHORITY

(PCT Rule 43bis.1)

Date of mailing *(day/month/year)* **23 JUNE 2011 (23.06.2011)**

Applicant's or agent's file reference
BIO-P1-PCT

FOR FURTHER ACTION
See paragraph 2 below

International application No.	International filing date *(day/month/year)*	Priority date *(day/month/year)*
PCT/US2010/052345	**12 OCTOBER 2010 (12.10.2010)**	22 OCTOBER 2009 (22.10.2009)

International Patent Classification (IPC) or both national classification and IPC

A01G 1/00(2006.01)i, A01G 25/00(2006.01)i, C05G 1/00(2006.01)i, C05F 15/00(2006.01)i, A01G 9/10(2006.01)i

Applicant

THE WIKI GARDEN INC.

1. This opinion contains indications relating to the following items:

- [x] Box No. I Basis of the opinion
- [ ] Box No. II Priority
- [ ] Box No. III Non-establishment of opinion with regard to novelty, inventive step and industrial applicability
- [ ] Box No. IV Lack of unity of invention
- [x] Box No. V Reasoned statement under Rule 43bis.1(a)(i) with regard to novelty, inventive step or industrial applicability; citations and explanations supporting such statement
- [ ] Box No. VI Certain documents cited
- [ ] Box No. VII Certain defects in the international application
- [ ] Box No. VIII Certain observations on the international application

2. **FURTHER ACTION**
If a demand for international preliminary examination is made, this opinion will be considered to be a written opinion of the International Preliminary Examining Authority ("IPEA") except that this does not apply where the applicant chooses an Authority other than this one to be the IPEA and the chosen IPEA has notified the International Bureau under Rule 66.1bis(b) that written opinions of this International Searching Authority will not be so considered.

If this opinion is, as provided above, considered to be a written opinion of the IPEA, the applicant is invited to submit to the IPEA a written reply together, where appropriate, with amendments, before the expiration of 3 months from the date of mailing of Form PCT/ISA/220 or before the expiration of 22 months from the priority date, whichever expires later.
For further options, see Form PCT/ISA/220.

3. For further details, see notes to Form PCT/ISA/220.

Name and mailing address of the ISA/KR	Date of completion of this opinion	Authorized officer
Korean Intellectual Property Office Government Complex-Daejeon, 189 Cheongsa-ro, Seo-gu, Daejeon 302-701, Republic of Korea Facsimile No. 82-42-472-7140	22 JUNE 2011 (22.06.2011)	KIM, Jae Hyun Telephone No.82-42-481-5626

WRITTEN OPINION OF THE INTERNATIONAL SEARCHING AUTHORITY

International application No.
PCT/US2010/052345

Box No. I Basis of this opinion

1. With regard to the **language**, this opinion has been established on the basis of:

   ☒ the international application in the language in which it was filed

   ☐ a translation of the international application into _____, which is the language of a translation furnished for the purposes of international search (Rules 12.3(a) and 23.1(b))

2. ☐ This opinion has been established taking into account the **rectification of an obvious mistake** authorized by or notified to this Authority under Rule 91 (Rule 43*bis*.1(a))

3. With regard to any **nucleotide and/or amino acid sequence** disclosed in the international application, this opinion has been established on the basis of:

   a. a sequence listing filed or furnished
      ☐ on paper
      ☐ in electronic form

   b. time of filing or furnishing
      ☐ contained in the international application as filed.
      ☐ filed together with the international application in electronic form.
      ☐ furnished subsequently to this Authority for the purposes of search.

4. ☐ In addition, in the case that more than one version or copy of a sequence listing has been filed or furnished, the required statements that the information in the subsequent or additioanl copies is identical to that in the application as filed or does not go beyond the application as filed, as appropriate, were furnished.

5. Additional comments:

WRITTEN OPINION OF THE INTERNATIONAL SEARCHING AUTHORITY

International application No.
PCT/US2010/052345

Box No. V Reasoned statement under Rule 43bis.1(a)(i) with regard to novelty, inventive step or industrial applicability; citations and explanations supporting such statement

1. Statement

Novelty (N)	Claims	1-20	YES
	Claims	NONE	NO
Inventive step (IS)	Claims	1-20	YES
	Claims	NONE	NO
Industrial applicability (IA)	Claims	1-20	YES
	Claims	NONE	NO

2. Citations and explanations :

Reference is made to the following documents:

D1: US 2008-0035753 A1 (Leonard Frederick Sheldrake) 14 February 2008
D2: US 2008-0155892 A1 (KATZIR-SHIMONI ALON et al.) 03 July 2008
D3: US 2008-0041978 A1 (RON KEREN) 21 February 2008
D4: EP 0538242 B1 (Chapin, Richard Dexter) 25 November 1998

1. Novelty and Inventive Step

1.1 Concerning claims 1, 11, **and 16**

Claims 1 and 11 relate to a self-contained garden growing system.
Claims 1 and 11 differ from these prior art documents in comprising a plurality of modular growing sections comprising a pre-determined length of porous tubular sock pre-filled with growing medium for plants, and having a modular length of irrigation tube installed lengthwise through the growing sock with opposite ends projecting through apertures formed in the sock material.
And it is not anticipated by any of the documents, nor is it obvious by the documents, taken alone or in combination. Therefore, claims 1 and 11 are novel and involve an inventive step under PCT Article 33(2) and 33(3).

Claim 16 relates to a method for self-contained garden growing.
Claim 16 differs from these prior art documents in enabling the delivery through the irrigation tube for each modulator growing medium over the length of the growing sock.
And it is not anticipated by any of the documents, nor is it obvious by the documents, taken alone or in combination. Therefore, claim 16 is novel and involves an inventive step under PCT Article 33(2) and 33(3).

1.2 Concerning claims 2-10, 12-15, and 17-20
Claims 2-10 are dependent on claim 1 directly, or indirectly, claims 12-15 are dependent on claim 11 directly, or indirectly, and claims 17-20 on claim 16 directly, or indirectly. As claims 1, 11, and 16 are novel and involve an inventive step, claims 2-10, 12-15, 17-20 are novel and inventive under PCT Article 33(2) and 33(3).

2. Industrial Applicability

The subject matters of claims 1-20 are considered to be industrially applicable under PCT Article 33(4).

CLAIMS:

1. A self-contained garden growing system comprising a plurality of modular growing sections, each being comprised of a pre-determined length of porous tubular sock made of a mesh or netting material and pre-filled with growing medium for plants therein, and having a modular length of irrigation tube installed lengthwise through the growing sock with opposite ends thereof projecting through apertures formed in the sock material, wherein a male coupling fitting is attached to one end of the tube and a female coupling fitting to the opposite end, whereby a plurality of modular growing sections can be coupled together in series with each section having its male and female coupling fitting attached to an opposite coupling fitting of an adjoining section.

2. A self-contained garden growing system according to Claim 1, wherein the male and female coupling fittings each have a retention ring with a sharp retention edge on a proximal end thereof for receiving a respective end of the section's tube pressed therein and gripping it tightly.

3. A self-contained garden growing system according to Claim 2, wherein each retention ring of the male and female coupling fittings has an outside facing surface with a greater diameter than that of the tube and presents an inclined flange or shoulder that abuts the outer surface of the growing sock to prevent it from slipping or sliding longitudinally along the tube.

4. A self-contained garden growing system according to Claim 3, wherein the growing sock of each modular section becomes locked in position between the shoulders of the retention rings of the male and female coupling fittings at its opposite ends.

5. A self-contained garden growing system according to Claim 1, wherein a first modular growing section of the plurality of sections coupled together in a series is coupled to a water source.

6. A self-contained garden growing system according to Claim 5, wherein the first modular growing section has a female coupling fitting end coupled to a male receptacle of a garden hose as a water source.

7. A self-contained garden growing system according to Claim 6, wherein a last modular growing section of the plurality of sections has a female end cap attached to its last male coupling fitting end.

8. A self-contained garden growing system according to Claim 6, wherein a last modular growing section of the plurality of sections has its last male coupling fitting end attached to an ancillary garden hose for remote watering.

9. A self-contained garden growing system according to Claim 1, wherein each modular growing section is pre-loaded with growing medium of one or more of: compost, compost products, wood shavings, recycled plastics, recycled glass, recycled cellulous, recycled foam, shredded paper, shredded cardboard, plastic beads, Styrofoam, soil mixes, soil amendments, clay, chipped bark, shredded plant material, stolons, rhizomes, sprigs, spores, seeds, peat moss, sphagnum peat moss, hay, coconut fibers, coir fibers, jute fibers, sugar cane fibers, bagasse, cinder, manure, seed hulls, virgin cellulose fiber, hemp fiber, vermiculite, perlite, pumice, polymers, water absorbing agents, absorbents, glues, flocculants, binding agents, gypsum, sand, gravel, pea gravel, lime, worm castings, bat guano, sea kelp, feather meal, bone meal, fish emulsion, hair, flax seed oil, oyster shell, rice hulls, wheat straw, corn fiber, cotton fibers, wool fibers, synthetic fibers, dolomite, organic waste, humate, humic acid, beneficial microorganisms, enzymes, bacteria, fungus, bio-stimulants, microbial inoculants, synthetic fertilizers, organic fertilizers, and nutrient-rich organic plant food.

10. A self-contained garden growing system according to Claim 1, wherein the plurality of modular growing sections are of one or more different types of: growing medium, section volume, and tube watering delivery.

11. A self-contained garden growing system comprising a plurality of modular growing sections, each being comprised of a pre-determined length of porous tubular sock made of a mesh or netting material and pre-filled with growing medium for plants therein, and having a modular length of irrigation tube installed lengthwise through the growing sock with opposite ends thereof projecting through apertures formed in the sock material, wherein the modular length tube has a number of emitter holes distributed over its length which are designed to

deliver a pre-determined volume of water by drip irrigation into the growing medium over the length of the growing sock.

12. A self-contained garden growing system according to Claim 11, wherein the plurality of modular growing sections are of a plurality of types having respective irrigation tubes designed to deliver a respective pre-determined volume of water that is a multiple of a basic watering volume for the sections, thereby facilitating easy computation of the number and types of sections that can be coupled together in a series for a given water pressure and delivery volume of a water source.

13. A self-contained garden growing system according to Claim 12, wherein the modular growing sections can be combined up to a maximum number of sections that would take up the given water pressure down to a low water pressure that can be reliably and stably maintained in a tube section.

14. A self-contained garden growing system according to Claim 12, wherein the modular growing sections can be combined up to a maximum number of sections that would take up the given water delivery volume down to a low water delivery volume that can be reliably and stably maintained in a tube section.

15. A self-contained garden growing system according to Claim 12, wherein the modular growing sections are of small, medium and large types, with the small type capable of delivering the basic watering volume, the medium type capable of delivering twice the basic watering volume, and the large type capable of delivering three times the basic watering volume.

16. A method for self-contained garden growing comprising:

providing a plurality of modular growing sections, each being comprised of a pre-determined length of porous tubular sock made of a mesh or netting material and pre-filled with growing medium for plants therein, and having a modular length of irrigation tube installed lengthwise through the growing sock with opposite ends thereof projecting through apertures formed in the sock material, and

enabling the delivery through the irrigation tube for each modular growing section a pre-determined volume of water by drip irrigation into the growing medium over the length of the growing sock.

17. A method for self-contained garden growing according to Claim 16, wherein the plurality of modular growing sections are of a plurality of types having respective irrigation tubes designed to deliver a respective pre-determined volume of water that is a multiple of a basic watering volume for the sections.

18. A method for self-contained garden growing according to Claim 17, combining modular growing sections up to a maximum number that would take up a given water pressure down to a low water pressure that can be reliably and stably maintained in a tube section.

19. A method for self-contained garden growing according to Claim 17, wherein the growing modular sections can be combined up to a maximum number that would take up a given water delivery volume down to a low water delivery volume that can be reliably and stably maintained in a tube section.

20. A method for self-contained garden growing according to Claim 17, wherein the modular growing sections are of small, medium and large types, with the small type capable of delivering the basic watering volume, the medium type capable of delivering twice the basic watering volume, and the large type capable of delivering three times the basic watering volume.

Doc code: IDS
Doc description: Information Disclosure Statement (IDS) Filed

PTO/SB/08a (01-
Approved for use through 07/31/2012. OMB 0651-00
U.S. Patent and Trademark Office; U.S. DEPARTMENT OF COMMER
Under the Paperwork Reduction Act of 1995, no persons are required to respond to a collection of information unless it contains a valid OMB control numb

INFORMATION DISCLOSURE STATEMENT BY APPLICANT (**Not for submission under 37 CFR 1.99)**	Application Number	12604132
	Filing Date	2009-10-22
	First Named Inventor	A. Joaquin
	Art Unit	3643
	Examiner Name	
	Attorney Docket Number	

U.S.PATENTS

Examiner Initial*	Cite No	Patent Number	Kind Code[1]	Issue Date	Name of Patentee or Applicant of cited Document	Pages,Columns,Lines where Relevant Passages or Relevant Figures Appear
	1					

If you wish to add additional U.S. Patent citation information please click the Add button.

U.S.PATENT APPLICATION PUBLICATIONS

Examiner Initial*	Cite No	Publication Number	Kind Code[1]	Publication Date	Name of Patentee or Applicant of cited Document	Pages,Columns,Lines where Relevant Passages or Relevant Figures Appear
	1	20080035753	A1	2008-02-14	Sheldrake	
	2	20080155892	A1	2008-07-03	Alon et al.	
	3	20080041978	A1	2008-02-21	Keren	

If you wish to add additional U.S. Published Application citation information please click the Add button.

FOREIGN PATENT DOCUMENTS

Examiner Initial*	Cite No	Foreign Document Number[3]	Country Code[2] ¡	Kind Code[4]	Publication Date	Name of Patentee or Applicant of cited Document	Pages,Columns,Lines where Relevant Passages or Relevant Figures Appear	T[5]
	1	EP0538242	EP	B1	1998-11-25	Chapin		☐

INFORMATION DISCLOSURE STATEMENT BY APPLICANT (Not for submission under 37 CFR 1.99)		
	Application Number	12604132
	Filing Date	2009-10-22
	First Named Inventor	A. Joaquin
	Art Unit	3643
	Examiner Name	
	Attorney Docket Number	

CERTIFICATION STATEMENT

Please see 37 CFR 1.97 and 1.98 to make the appropriate selection(s):

☐ That each item of information contained in the information disclosure statement was first cited in any communication from a foreign patent office in a counterpart foreign application not more than three months prior to the filing of the information disclosure statement. See 37 CFR 1.97(e)(1).

OR

☐ That no item of information contained in the information disclosure statement was cited in a communication from a foreign patent office in a counterpart foreign application, and, to the knowledge of the person signing the certification after making reasonable inquiry, no item of information contained in the information disclosure statement was known to any individual designated in 37 CFR 1.56(c) more than three months prior to the filing of the information disclosure statement. See 37 CFR 1.97(e)(2).

☐ See attached certification statement.

☐ The fee set forth in 37 CFR 1.17 (p) has been submitted herewith.

☒ A certification statement is not submitted herewith.

SIGNATURE

A signature of the applicant or representative is required in accordance with CFR 1.33, 10.18. Please see CFR 1.4(d) for the form of the signature.

Signature	/lkmchong/	Date (YYYY-MM-DD)	2011-08-23
Name/Print	Leighton K. Chong	Registration Number	27,621

This collection of information is required by 37 CFR 1.97 and 1.98. The information is required to obtain or retain a benefit by the public which is to file (and by the USPTO to process) an application. Confidentiality is governed by 35 U.S.C. 122 and 37 CFR 1.14. This collection is estimated to take 1 hour to complete, including gathering, preparing and submitting the completed application form to the USPTO. Time will vary depending upon the individual case. Any comments on the amount of time you require to complete this form and/or suggestions for reducing this burden, should be sent to the Chief Information Officer, U.S. Patent and Trademark Office, U.S. Department of Commerce, P.O. Box 1450, Alexandria, VA 22313-1450. DO NOT SEND FEES OR COMPLETED FORMS TO THIS ADDRESS. **SEND TO: Commissioner for Patents, P.O. Box 1450, Alexandria, VA 22313-1450.**

(19) Europäisches Patentamt
European Patent Office
Office européen des brevets

(11) EP 0 538 242 B1

(12) **EUROPEAN PATENT SPECIFICATION**

(45) Date of publication and mention of the grant of the patent:
25.11.1998 Bulletin 1998/48

(51) Int. Cl.[6]: **A01G 25/02**

(21) Application number: **93100555.7**

(22) Date of filing: **28.03.1983**

(54) **Drip irrigation system employing adjacently arranged flow-restricting passages**

Tropfbewässerungssystem mit nebeneinanderliegenden und den Ausfluss begrenzenden Passagen

Système d'irrigation goutte à goutte au moyen de passages de courant restrictifs voisins

(84) Designated Contracting States:
AT BE CH DE FR GB IT LI NL SE

(30) Priority: **01.04.1982 US 364213**
01.04.1982 US 364229

(43) Date of publication of application:
21.04.1993 Bulletin 1993/16

(62) Document number(s) of the earlier application(s) in accordance with Art. 76 EPC:
87111894.9 / 0 278 049
83103058.0 / 0 091 059

(73) Proprietor:
Chapin, Richard Dexter
Watertown New York 13601 (US)

(72) Inventor: **Chapin, Richard Dexter**
Watertown New York 13601 (US)

(74) Representative:
Casalonga, Axel et al
BUREAU D.A. CASALONGA - JOSSE
Morassistrasse 8
80469 München (DE)

(56) References cited:
GB-A- 1 596 233
US-A- 3 873 030
US-A- 4 247 051

Note: Within nine months from the publication of the mention of the grant of the European patent, any person may give notice to the European Patent Office of opposition to the European patent granted. Notice of opposition shall be filed in a written reasoned statement. It shall not be deemed to have been filed until the opposition fee has been paid. (Art. 99(1) European Patent Convention).

EP 0 538 242 B1

Printed by Xerox (UK) Business Services

Description

This invention relates to a water distributing hose for use in a trickle irrigation or drip irrigation system particularly adapted for the surface or subsurface watering of long rows of crops, whether on greenhouse benches or in the field, and more specifically in a trickle irrigation system wherein the water is allowed to discharge slowly, directly at the desired point of application, normally about the base of the plants.

To be practical, trickle irrigation must provide for the delivery of water at a slow uniform rate over long lengths or runs of hose. In the past, various trickle irrigation systems have been tried, including pipes with small holes, pipes with various types of small outlet members, pipes with small tubes for outlets, plastic pipes with slits, tubes which ooze water through the wall, and hoses which ooze water through a sewn seam. Each type has depended on a small orifice, low pressure, friction created in a long outlet member such as a tube, or a combination of these to limit the flow through each individual outlet. However, there are disadvantages associated with each such known system. For example, the use of extremely small orifices such as holes, slits, or the like, tend to clog easily. Tube outlets and special outlet members are relatively expensive to produce and ship, particularly when considering the large quantities required. In addition, low pressure systems and tubes which provide for an oozing of the water through the wall are not capable of producing a uniform flow along the length of the hose or the like, particularly on sloping runs.

One water distributing hose which has met with success is that disclosed in U.S. Reissue Patent No. Re. 28,095, reissued July 30, 1974 to Chapin. In the reissue patent, a multi-chamber water distributing hose is shown in the context of a trickle irrigation system. Another hose which has met with success is that currently marketed by applicant under the name "TRI-WALL" hose. The "TRI-WALL" hose is an enlongated water distributing hose capable of effectively watering large areas with readily available water pressures and in a manner whereby an essentially uniform watering is achieved. The pressure is substantially maintained throughout the length of the hose through a stacked arrangement of first, second, and third fluid channels, which enable a maintaining of the relatively high pressure throughout the length of the hose and the reduction of this pressure directly at the point of the passing of the water from the high pressure first fluid channel through a series of first fluid-passing openings to the much smaller second fluid channel, and a further pressure reduction as the water passes within the third fluid channel between a series of second fluid-passing openings and a series of discharge fluid-passing openings.

Although the performance of all of the Chapin hoses has been excellent, there is, nevertheless, always a need for improved performance.

US-A-4 247 051 reveals, in the embodiment of Figure 10, an irrigation hose made from an elongated flat sheet of flexible water-impervious material bent along its length to have its longitudinal margins overlapping. Two spaced continuous longitudinal ribs are disposed between the overlapping margins so as to define between said margins a plurality of discrete longitudinally extending flow-restricting passages disposed longitudinally end to end. A continuous longitudinal main supply channel is defined inside the hose by said sheet material and the inner of said ribs. A series of longitudinally spaced inlets in the inner margin provides fluid communication between the main supply channel and the flow-restricting passages and a series of longitudinally spaced outlets in the outer margin provides fluid communication between each flow-restricting passage and the exterior of the hose.

The elongated fluid distributing hose as claimed for use in a fluid distributing system, comprises : an elongated sheet of water-impervious plastics material having two longitudinally extending opposite margins, said material being folded upon itself such that said margins overlap one another ; two longitudinally extending strips transversally spaced from one another , disposed between and secured to said two overlapping margins and defining between them a plurality of discrete longitudinally extending flow-restricting passages disposed longitudinally end-to-end ; a continuous longitudinal main supply channel defined by said sheet material and a first of said strips, said supply channel being adapted for fluid communication with a source of fluid under pressure ; a series of longitudinally spaced inlets for providing fluid communication between said main supply channel and each of said flow-restricting passages ; and a series of longitudinally spaced outlets passing fluid from each of said flow-restricting passages to the exterior of the hose. According to the invention, said discrete flow-restricting passages are defined by zig-zag or serpentine flow-restricting paths molded into an elongated ribbon of plastic material disposed between and secured to said overlapping margins.

The hose of the present invention for use in an irrigation system for plants, vegetables, and the like enables the construction of a drip irrigation system which is relatively inexpensive while, at the same time, being capable of effectively watering large areas with readily available water pressures and in a manner whereby an essentially uniform watering is achieved. This desired uniform watering results notwitstanding sloping ground conditions and the like. Water pressure is substantially maintained throughout the length of the tube without requiring the use of extremely small orifices which easily clog from impurities, reliance instead being had on a particular arrangement of a main supply channel exhibits relatively high water pressure throughout the length of the hose. A reduction of this pressure takes place in the water distributing network with the passing of the water from the high pressure main supply channel through a series of first fluid-passing openings or inlet

stations to a much smaller first fluid-restricting passage before being released to the exterior of the hose through a series of discharge fluid-passing openings or outlet stations. In certain embodiments, the flow-restricting passages include a flow-regulating structure.

The hose of the instant invention is preferably of a thin water-impervious plastic material, such as polyethylene. The main supply channel moves the water at a relatively high pressure along the full length of the hose for discharge into the water distributing network for final discharge out of the hose itself through a number of openings or outlet stations in the outer passage. The pressure decrease within the water distributing network is such that the flow of water at the outlet stations of the network is in the form of a drip under substantially quiescent conditions.

Advantages of the present invention include the provision of a system which can be inexpensively produced, such being essential because of the vast quantities of hose needed to irrigate field crop installations which typically involve thousands of acres. The system is compact, the hose capable of being flattened and rolled, thereby simplifying the handling, storage, shipping, installation and removal. The hose used is of a highly durable nature. In addition, large areas can be simultaneously watered without requiring excessively high pressures or large volumes of water with the distribution of the water being uniform over extremely long lengths as well as on sloping layouts and in both surface and subsurface installations.

These, together with other features and advantages which will become subsequently apparent, reside in the details of construction and operation as more fully hereinafter described and claimed reference being made to the accompanying drawings forming a part hereof, wherein like numerals refer to like parts throughout.

Figure 1 is a perspective view of a portion of a field showing a typical use of the fluid distributing hose of the present invention.

Figure 2 is a perspective view of a portion of a hose which does not embody the teachings of the subject invention.

Figure 3 is a section taken along lines 3-3 of Figure 2.

Figure 4 is a view similar to that of Figure 2 with a portion of the hose removed to reveal the interior structure of the flow-restricting passages.

Figure 5 is a schematic view of a second embodiment of the hose of Figure 2.

Figure 6 is a schematic view useful in explaining the operation of the hose of Figure 2.

Figure 7 is a view taken along lines 7-7 of Figure 2.

Figure 8 is a perspective view of an embodiment of a hose according to the invention.

Figure 9 is a view taken along lines 9-9 of Figure 8.

Figure 10 is a view taken along lines 10-10 of Figure 9.

Figure 11 is a view taken along lines 11-11 of Figure 9.

Figure 12 is a perspective diagrammatic drawing to illustrate an embodiment of a machine used to manufacture a hose according to the teachings of the present invention.

Figure 13 is an enlarged view of the molding wheel of the machine of Figure 12.

With reference to Figures 1-7, reference 110 is used to generally designate a water distributing hose which does not embody the teachings of the present invention. The hose 110 basically comprises a gross water distributing channel 112 and a fine water distributing network 114. Adjacent to channel 112 and sharing a common wall 116 is the network 114, which basically comprises a flow-restricting passage disposed about the exterior of the main supply channel 112. The passage is substantially parallel to the longitudinal axis A of the main supply channel.

In use, the main supply channel 112 is connected to a source of pressurized water. This can be effected, for example, by connecting the main supply channel 112 at one end of hose 110 to a suitable fitting 121 in main 125. The other end 111 of the hose 110 is closed off to prevent escape of water from the hose. Such an arrangement has been generally illustrated in Figure 1 wherein the hose 110 is illustrated next-to rows of vegetables in a large field. It will be appreciated that such an arrangement is also equally adaptable for use in greenhouses and home gardens.

With reference to Figures 2 through 4, an elongated layer or sheet 122 of thin water-impervious plastic material, such as a thermoplastic film, terminates in two longitudinally extending margins 124 and 126 which overlap each other in a predetermined fashion. Interposed between the overlapping margins is a series of elongated longitudinally extending strips of varying lengths and arranged in a particular manner, yet to be described, to define the flow-restricting passage 114. The strips are also made from a water-impervious plastic material.

A first set of strips 130 is positioned near the edge 132 of margin 124, so that each of the strips defines an axis substantially parallel to and equidistant from the longitudinal axis A of the hose 110. The ends 134 of the strips are periodically spaced from each other to define inlet stations as a series of fluid-passing openings 136 therein. The frequency of the inlet stations typically ranges from a few inches to several feet throughout the full length of the hose. The inlet stations or first fluid-passage openings 136 are positioned so that they form a means of fluid communication between the main supply channel 112 and the flow-restricting passage 114. The spaces between the strips 130 define the first inlet stations 136, and the strips 130, in effect, define a common wall 133 between the main supply channel 112 and the passage 118.

In like manner, a second set of strips 140 is positioned near the edge 162 of the margin 126 so that the

strips define an axis substantially parallel to the longitudinal axis A of the hose 110. The placement of the strips 140 is such that they are positioned near to, but spaced from, the wall 133 defined by strips 130. The ends 144 of the strips are spaced from each other to define a series of fluid discharge openings or outlet stations 146 to provide for fluid communication between the passage and the exterior of the hose. The spacing between the outlet stations 146 is substantially the same as that between the inlet stations 136.

The inlet and outlet stations 136 and 146 are substantially of a rectangular cross section and precisely formed by the positioning of the strips between the overlapping margins 124 and 126. The size of the outlets at each station is chosen so that there is a minimum chance of clogging as water passes through the station.

For the purposes of simplifying the presentation, the cross passageways or fluid-passing stations 136 and 146 in Figures 2-4 are shown in the context of a single opening. However, as shown in Figure 5, three or more openings may be used close together to comprise each station. By example, the three openings 146' constitute one fluid-passing station which minimizes the chance of clogging as the flow passes through the station. This provides multiple openings at each station so that, if one opening should clog, the other two openings can carry the flow through the station.

It is understood that a larger number of closely spaced fluid-passing openings may constitute the inlet and outlet stations 136 and 146 as long as the total cross-sectional area of the openings associated with each station exceeds a minimum size so that there is a minimum amount of clogging across the station.

In the preferred embodiment, having 8 inches (20 cm) between the centers of like fluid-passing stations, the dimension of each fluid-passing opening is approximately 0,15 cm (0.060 inch) in width, a height substantially the same as the height of strips 130 and 140 of about 0,025 cm (0.010 inch) and a length of about 0,18 cm (0.070 inch) which is substantially the same as the width of the strips.

The length of the flow passage through each fluid-passing opening is substantially longer than the mean average between the width and height dimensions of the fluid-passing opening. In effect, each fluidpassing opening is in itself a short pressure-drop channel. With reference to Figure 6, this pressure-drop phenomena may be explained as follows. The flow from segment 114B of flow channel 114 comes directly toward the flow from segment 114C which is coming from the opposite direction, and they meet at the fluid-passing outlet 146B. Each flow thus makes a 90° turn and flows straight for about 0.070 inch (0,18cm) through the length of fluid-passing opening 146B. It is desirable to have the length of the fluid-passing opening (for example, 146B), which is also the thickness of wall 140, at least three times the thickness of the common wall 116 to get an increase in friction and pressure loss as the flow makes the sharp 90° turn in going through the fluid-passing openings from the flow-restricting passage to the exterior of the hose. The same relationship exists for the remaining fluidpassing opening 136 relative to the thickness of common wall 116.

In the embodiment of Figure 4, using a 152 um (6 mil.) polyethelene film, the passage 114 has a generally rectangular configuration with a height of approximately 0,025 cm (0,010 inch) and a width of about 0,18 cm (0,070 inch). The fluid-passing openings 136 are spaced approximately 20 cm (eight inches) apart, and the outer openings 146 are spaced 20 cm (eight inches) apart with each opening 146 being located intermediate between, but spaced from, a pair of openings 136.

As the main supply channel 112 of hose 110 is pressurized at 0,414 bar (6 psi), water flows through first inlet stations 136 located in wall member 133 which separates channel 112 and passage 114. The flow is then divided and moves within passage 114 to the nearest outlet station 146 on either side of the first inlet station 136. Flow-restricting passage 114 has a length between inlet stations and a cross section of a size to reduce the pressure by approximately 0,407 bar (5.9 psi) within passage 114 between fluid inlet stations 136 and outlet stations 146. The flow is then discharged to the exterior of the hose through discharge fluid-passing openings or outlet stations 146 in wall member 143 with a slight pressure loss of about 0,007 bar (0.1 psi).

Because of the friction created as water passes through the small fluid passage 114, the pressure adjacent to the discharge fluid-passing openings 146 is negligible (such as 0,007 bar (0.1 psi) or less), and the water actually drips out through the openings 146 under substantially quiescent conditions under almost no outward pressure.

With reference to Figures 8 through 11, one embodiment of the subject invention will be described. According to the invention, this is characterized by the provision of a flow-restricting passage in the form of a serpentine or zig-zag path. With specific reference to Figure 10, the structure associated with creating this path may be described. An elongated flat ribbon 202 of plastic material passes through a molding operation (to be described in detail hereinafter) in order to create the flow-restricting path or channel 114. After molding, the sheet 202 as oriented in Figure 10 contains a planar top surface 204 and a planar bottom surface 206. The sheet also defines right edge 208 and left edge 212. Extending outwardly away from surface 206 and along each of the edges 208 and 212 are associated strips 130 and 140. Each strip extends in a generally longitudinal direction and is essentially parallel with the longitudinal axis A of the hose 210.

The strips are arranged so that they define a space between each other. This space with additional structure will become the passage 114. Positioned periodically within the space and emanating from each of the strips 130 and 140 are a series of transverse fingers

214. The fingers associated with strip 130 and the fingers associated with strip 140 are arranged in an interdigitated fashion at a predetermined spacing from each other.

In order to create a fluid communication between the path 114 and the main supply channel 112, a series of openings 136', which define an inlet station 136, are molded into the strip 130. In like manner, in order to create an exit or discharge opening for water escaping from the channel 114, there is provided in strip 140 a series of three closely spaced outlets 46' constituting an outlet station 146.

As can be seen, with reference to Figure 9, each inlet channel 136 being formed in strip 130 is essentially opposite each outlet 146 formed in strip 140. However, through the provision of a ridge 218 placed into channel 114, the inlets and outlets are separated from each other so that for each flow restricting channel 114 there is only one inlet station 136 associated with a specific downstream outlet station 146.

As the flow moves from an inlet station 136 to its flow connecting outlet station 146, the serpentine design of the flow-restricting path 114 makes it necessary for the water to travel a total distance which is substantially equal to three times the shortest distance between the inlet station 136 and its associated outlet station 146. Additional friction and pressure drop is created because the flow has to make two right angle turns as it moves past each transverse finger 214, as shown by arrows 371 and 373. The pressure created by the combination of the longer flow path and the numerous right angle turns permits the flow path 114 to have a larger cross section in order to provide less chance of clogging while still maintaining the same flow rate.

Beginning at a pressure of 8 psi (0,552 bar) in the main supply channel 112, there is approximately a 7.9 psi (0,545 bar) pressure drop within the flow-restricting channel 114 and a further pressure drop of about 0.1 psi (0,0069 bar) as the flow is discharged from the outlet openings 146'.

Figure 10 illustrates the approximate shape of common wall 124 as it is in its pressurized position 27A within passage 114 near to but downstream of inlet station 136. The common wall 116 maintains essentially the same contour as the outer margin 126 because the pressure within the channel 114 is essentially the same as the pressure in the main supply channel 112 at this point.

Figure 11 illustrates the outward deflection of the common wall 116 at point 27B due to the approximate 7.9 psi (0,545 bar) pressure differential between the main supply channel 112 and the flow-restricting channel 114 at this point. The pressured position 27B is within passage 114 near to but upstream of outlet station 146. This deflection of the common wall at 278 reduces the size and the flow of the flow-restricting channel 114. When the hose is operating under very low pressure, as occurs at the beginning and end of each watering cycle, the common wall 116 at point 27B returns to its normal position (like 27A in Figure10) and allows any accumulated foreign particles to flush out through the full size channel 114.

With reference to Figures 12 and 13, a method and apparatus for manufacturing a hose similar to that shown in Figure 9 are disclosed.

Basically, the method and apparatus of Figures 12 and 13 contemplate the disposition of a thermoplastic hot melt ribbon 202 in a parallel relationship extending longitudinally along the interior surface on one of the margins 126 of elongated film 122. The film and ribbon are continually advanced and pass through a molding or forming station 314 where the ribbon is deformed according to a predetermined pattern to create the various inlet and outlet stations and serpentine passageways 114 found in the final hose. The film continues to advance and eventually passes through a guide which causes the exterior surface along the other margin 124 to be disposed about the beads. The film then advances through the nip of a pair of forming wheels and emerges as the finally assembled hose.

Initially, the impervious film 122 is produced in a flat state. The film 122 is introduced into the machine by placing it in its flat state under the nozzle 312 of a conventional extrusion nozzle where the ribbon 202 is being extruded, and, at the same time, between the nip of the opposed rolls 322 and 324, which constitute the molding station 314. The film is also folded back upon itself and passed through a stationary guide nember 326 located downstream of the molding station. The film, after passing through the guide station, is received within the nip of a pair of forming wheels 315 and 316, which constitute the forming station 131. The film emerges from the forming station as the complete hose. During production, the hose is continually advanced by the rotation of the forming wheels.

Wheel 324, which constitutes the molding wheel, is disposed above wheel 322 and rotates about an axis 351 which is essentially parallel to the rotation axis 341 of the bottom wheel. Wheel 324 has disposed about its periphery a number of indentations 353 positioned in a predetermined arrangement in order to produce the desired pattern in the finished hose shown in Figure 9.

An alternate method and apparatus is to extrude a one-piece flat sheet to create a composite of the film 122 with appropriate structure formed along one margin as it leaves the extrusion die. The structure is similar to ribbon 202. The flat sheet with appropriate structure, while still hot, then passes through a station to mold the structure of the preferred embodiment.

While descriptions herein have generally referred to water and fluid passages, it is understood the same hose can be used for chemical solutions such as insecticides, fungicides, fertilizers and also compressed air for soil aeration.

Since there is a wide variety of conditions encountered in the field, it is understood that the preferred

embodiment is just one of the many combinations of ratios and sizes of first fluid-passing openings, spacing of discharge fluid-passing openings, and pressures introduced into the main supply channel, which fall within the scope and function of this invention.

The foregoing is considered as illustrative only of the principles of the invention. Further, since numerous modifications and changes will readily occur to those skilled in the art, it is not desired to limit the invention to the exact construction and operation shown and described, and accordingly all suitable modifications and equivalents may be resorted to, falling within the scope of the invention as claimed.

Claims

1. An elongated fluid distributing hose (210) for use in a fluid distributing system, said hose comprising : an elongated sheet of water-impervious plastics material (122) having two longitudinally extending opposite margins (124, 126), said material being folded upon itself such that said margins overlap one another ; two longitudinally extending strips (130, 140) transversally spaced from one another, disposed between and secured to said two overlapping margins and defining between them a plurality of discrete longitudinally extending flow-restricting passages (114) disposed longitudinally end-to-end ; a continuous longitudinal main supply channel (112) defined by said sheet material (122) and a first (130) of said strips, said supply channel being adapted for fluid communication with a source of fluid under pressure ; a series of longitudinally spaced inlets (136) for providing fluid communication between said main supply channel and each of said flow-restricting passages ; and a series of longitudinally spaced outlets (146) passing fluid from each of said flow-restricting passages to the exterior of the hose, characterized in that said discrete flow-restricting passages (114) are defined by zigzag or serpentine flow-restricting paths molded into an elongated ribbon (202) of plastic material disposed between and secured to said overlapping margins (124, 126).

2. The hose of claim 1 wherein a ridge (218) is formed between the discrete flow-restricting passages (114) separating them from each other.

3. The hose of claim 1 or 2 wherein transverse fingers (214) are extended from each of said two strips (130, 140) toward the other of said strips.

4. The hose of claim 3 wherein said transverse fingers (214) are arranged in an interdigitated fashion at a predetermined spacing from each other creating said serpentine path.

5. The hose of anyone of claims 1 to 4 wherein each inlet (136) to each of said discrete flow-restricting passages (114) comprises several closely spaced openings (136').

6. The hose of anyone of claims 1 to 5 wherein each outlet (146) to each of said discrete flow restricting passages (114) comprises several closely spaced openings (146').

7. The hose of claim 1 or 5 wherein said inlets (136) are provided in said first strip (130).

8. The hose of claim 1 or 6 wherein said outlets (146) are provided in the other (140) of said strips.

9. The hose of claims 1 wherein each inlet (136) is connected to one outlet (146) by one flow-restricting passage (114).

10. The hose of anyone of claims 1 to 9 wherein the length of the serpentine fluid path within each of said flow-restricting passages (114) is substantially equal to three times the distance between each of said inlets (136) and the corresponding outlets (146).

11. The hose of anyone of the preceding claims, wherein the inner (124) of said margins is stretchable and deflectable outwardly (27B) into said flow-restricting passage (114) under the increase of the pressure differential across said margin (124) occuring in response to an increase of the water pressure in said main channel (112), in order to increase the friction within said passage (114), thus providing a flow-regulating effect and allowing the water to drip out of each outlet under substantially quiescent conditions with almost no pressure drop across each outlet.

Patentansprüche

1. Strömungsmittelverteilerschlauch (210) für ein Fluidverteilersystem, bestehend aus einer langgestreckten Folie aus wasserundurchlässigem Material (122) mit zwei gegenüberliegenden Längsrändern (124, 126), wobei das Material derart gefaltet ist, daß sich die Ränder überlappen; zwei Längsstreifen (130, 140), die in Querrichtung beabstandet, zwischen den beiden überlappenden Rändern angeordnet und an diesen befestigt sind und zwischen sich mehrere diskrete Strömungsbegrenzungslängskanäle (114) bilden, die in Längsrichtung endweise angeordnet sind; einem kontinuierlichen Längshauptzufuhrkanal (112), der von dem Folienmaterial (122) und einem ersten (130) der Streifen gebildet ist, wobei der Zufuhrkanal zur Strömungsmittelverbindung mit einer Druck-

strömungsmittelquelle geeignet ist; einer Reihe von in Längsrichtung beabstandeten Einlässen (136) zur Strömungsmittelverbindung zwischen dem Hauptzufuhrkanal und jedem Strömungsbegrenzungskanal; und einer Reihe von in Längsrichtung beabstandeten Auslässen (146), die Strömungsmittel von jedem Strömungsbegrenzungskanal zum Äußeren des Schlauches leiten,
dadurch gekennzeichnet, daß
die diskreten Strömungsbegrenzungskanäle (114) durch Zick-Zack- oder Serpentinenströmungsbegrenzungspfade gebildet sind, die in eine Längsrippe (202) aus Kunststoffmaterial geformt ist, die zwischen den überlappenden Rändern (124, 126) angeordnet und an diesen befestigt ist.

2. Schlauch nach Anspruch 1, bei dem eine Rippe (218) zwischen den diskreten Strömungsbegrenzungskanälen (114) ausgebildet ist, die diese voneinander trennt.

3. Schlauch nach Anspruch 1 oder 2, bei dem sich Quervorsprünge (214) von jedem der beiden Streifen (130, 140) zum anderen Streifen erstrecken.

4. Schlauch nach Anspruch 3, bei dem die Quervorsprünge (214) ineinandergreifend mit einem vorbestimmten Abstand voneinander einen Serpentinenpfad bildend angeordnet sind.

5. Schlauch nach einem der Ansprüche 1 - 4, bei dem jeder Einlaß (136) zu jedem der diskreten Strömungsbegrenzungskanäle (114) mehrere dicht beieinanderliegende Öffnungen (136') umfaßt.

6. Schlauch nach einem der Ansprüche 1 - 5, bei dem jeder Auslaß (146) jeder der diskreten Strömungsbegrenzungskanäle (114) mehrere dicht beieinander liegende Öffnungen (146') umfaßt.

7. Schlauch nach Anspruch 1 oder 5, bei dem die Einlässe (136) im ersten Streifen (130) vorgesehen sind.

8. Schlauch nach Anspruch 1 oder 6, bei dem die Auslässe (146) im anderen Streifen (140) vorgesehen sind.

9. Schlauch nach Anspruch 1, bei dem jeder Einlaß (136) mit einem Auslaß (146) durch einen Strömungsbegrenzungskanal (114) verbunden ist.

10. Schlauch nach einem der Ansprüche 1 - 9, bei dem die Länge des Serpentinenströmungsmittelpfades in jedem der Strömungsbegrenzungskanäle (114) im wesentlichen dem dreifachen Abstand zwischen jedem der Einlässe (136) und den entsprechenden Auslässen (146) gleich ist.

11. Schlauch nach einem der vorhergehenden Ansprüche, bei dem der innere (124) dieser Ränder dehnbar und bei einer aufgrund einer Erhöhung des Wasserdruckes im Hauptkanal (112) auftretenden Zunahme der Druckdifferenz beiderseits dieses Randes (124) nach außen hin (27B) in den Strömungsbegrenzungskanal (114) verformbar ist, um die Reibung im Strömungsbegrenzungskanal (114) zu erhöhen, so daß ein Strömungsregulierungseffekt bewirkt wird, und das Wasser aus jedem Auslaß unter im wesentlichen Ruhebedingungen mit nahezu keinem Druckabfall über jeden Auslaß austropfen kann.

Revendications

1. Tuyau allongé (210) de distribution de fluide, destiné à être utilisé dans un système de distribution de fluide, ledit tuyau comprenant : une feuille allongée (122) de matière plastique imperméable à l'eau, présentant deux parties marginales opposées (124, 126) qui s'étendent longitudinalement, ledit matériau étant replié sur lui-même de manière que lesdites parties marginales se recouvrent ; deux bandes (130, 140) s'étendant longitudinalement, transversalement espacées l'une de l'autre, disposées entre lesdites deux parties marginales qui se recouvrent en leur étant fixées et définissant entre elles une pluralité de passages de limitation d'écoulement (114), séparés, qui s'étendent longitudinalement et sont disposés longitudinalement bout à bout ; un canal principal d'alimentation (112), longitudinal et continu, défini par ledit matériau en feuille (122) et une première (130) desdites bandes, ledit canal d'alimentation étant adapté à une communication de fluide avec une source de fluide sous pression ; une série de moyens d'entrée (136) longitudinalement espacés pour assurer une communication de fluide entre ledit canal principal d'alimentation et chacun desdits passages de limitation d'écoulement ; et une série de moyens de sortie (146) longitudinalement espacés pour faire passer le fluide de chacun desdits passages de limitation d'écoulement vers l'extérieur du tuyau, caractérisé en ce que lesdits passages de limitation d'écoulement séparés (114) sont définis par des trajets de restriction d'écoulement en zig-zag ou en serpentin, moulés dans un long ruban (202) de matière plastique disposé entre lesdites parties marginales qui se recouvrent (124, 126) en leur étant fixé.

2. Tuyau selon la revendication 1, dans lequel une arête (218) est formée entre les passages séparés (114) de limitation de l'écoulement en les séparant les uns des autres.

3. Tuyau selon la revendication 1 ou 2, dans lequel

des doigts transversaux (214) partent de chacune desdites deux bandes (130, 140) en direction de l'autre desdites bandes.

4. Tuyau selon la revendication 3, dans lequel lesdits doigts transversaux (214) sont disposés de manière entrecroisée avec un espacement prédéterminé entre eux pour créer ledit passage en serpentin.

5. Tuyau selon l'une quelconque des revendications 1 à 4, dans lequel chaque moyen d'entrée (136) dans chacun desdits passages séparés (114) de restriction de l'écoulement comprend plusieurs ouvertures (136') faiblement espacées.

6. Tuyau selon l'une quelconque des revendications 1 à 5, dans lequel chaque moyen de sortie (146) de chacun desdits passages séparés (114) de restriction de l'écoulement comprend plusieurs ouvertures (146') faiblement espacées.

7. Tuyau selon la revendication 1 ou 5, dans lequel lesdits moyens d'entrée (136) sont formés dans ladite première bande (130).

8. Tuyau selon la revendication 1 ou 6, dans lequel lesdits moyens de sortie (146) sont formés dans ladite autre bande (140).

9. Tuyau selon la revendication 1, dans lequel chaque moyen d'entrée (136) est couplé à un moyen de sortie (146) par un passage (114) de restriction de l'écoulement.

10. Tuyau selon l'une quelconque des revendications 1 à 9, dans lequel la longueur du trajet en serpentin du fluide à l'intérieur de chacun desdits passages (114) de restriction de l'écoulement est sensiblement égale au triple de la distance entre chacun desdits moyens d'entrée (136) et les moyens de sortie correspondants (146).

11. Tuyau selon l'une quelconque des revendications précédentes, dans lequel la partie marginale intérieure (124) peut être étirée et fléchir vers l'extérieur (27B) dans ledit passage (114) de restriction de l'écoulement, sous l'effet de l'augmentation de la différence de pression de part et d'autre de ladite partie marginale (124) qui se produit en réponse à une augmentation de la pression de l'eau dans ledit canal principal (112), afin d'augmenter les frottements à l'intérieur dudit passage (114) et d'avoir ainsi un effet de régulation du débit et permettre à l'eau de sortir goutte à goutte par chaque moyen de sortie dans des conditions sensiblement stables, avec pratiquement aucune chute de pression dans chaque moyen de sortie.

FIG.1

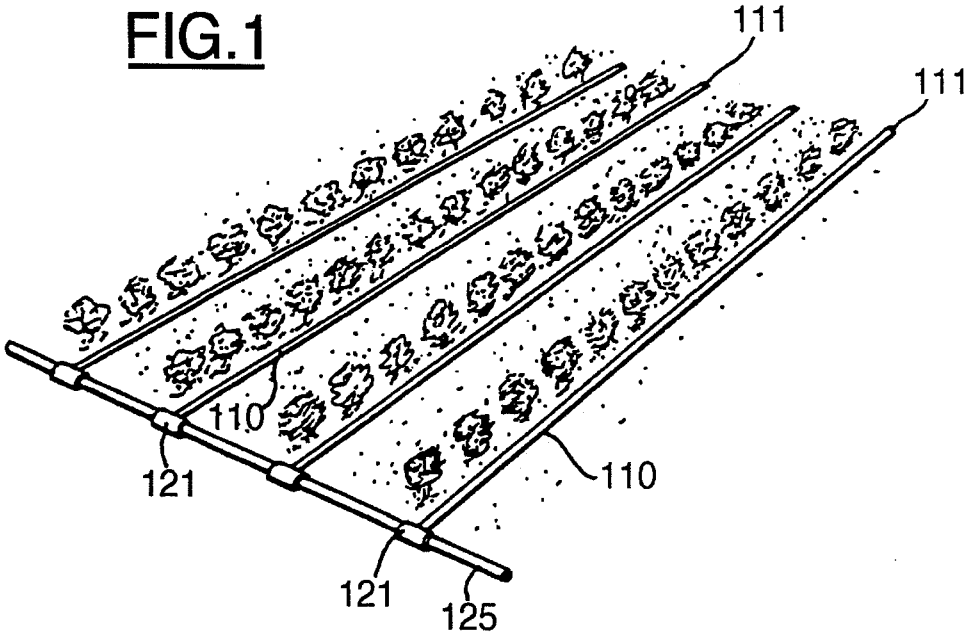

FIG.2

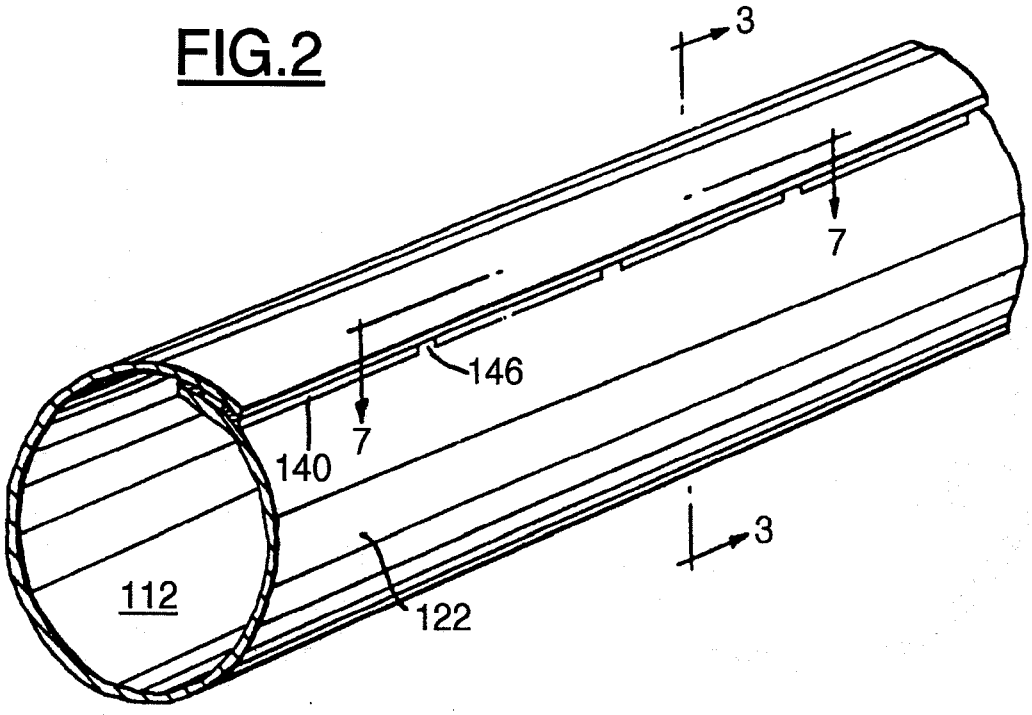

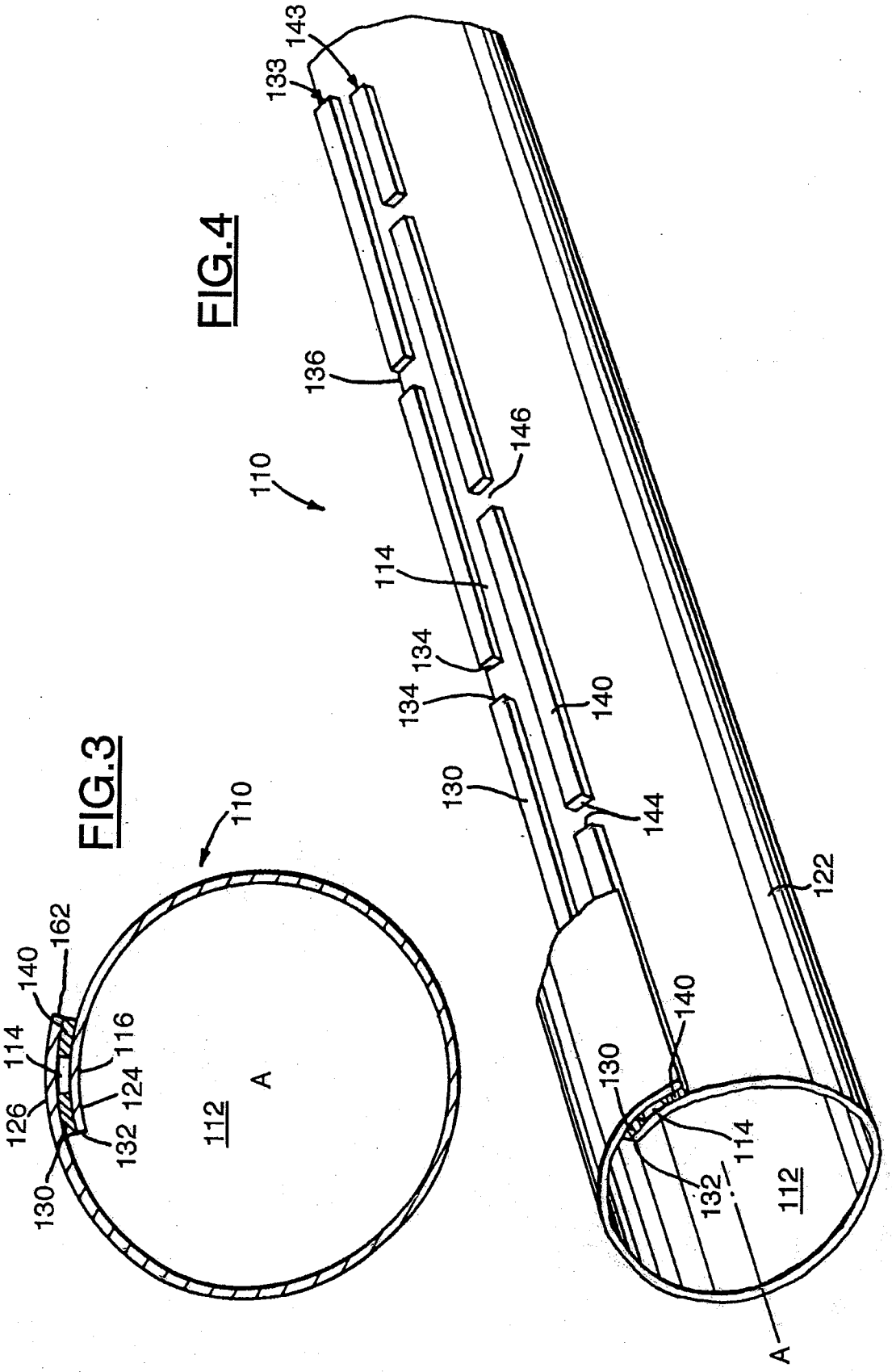
FIG.3
FIG.4
110
112
A
114
116
124
126
130
132
134
140
144
146
162
122
133
136
143

FIG.5

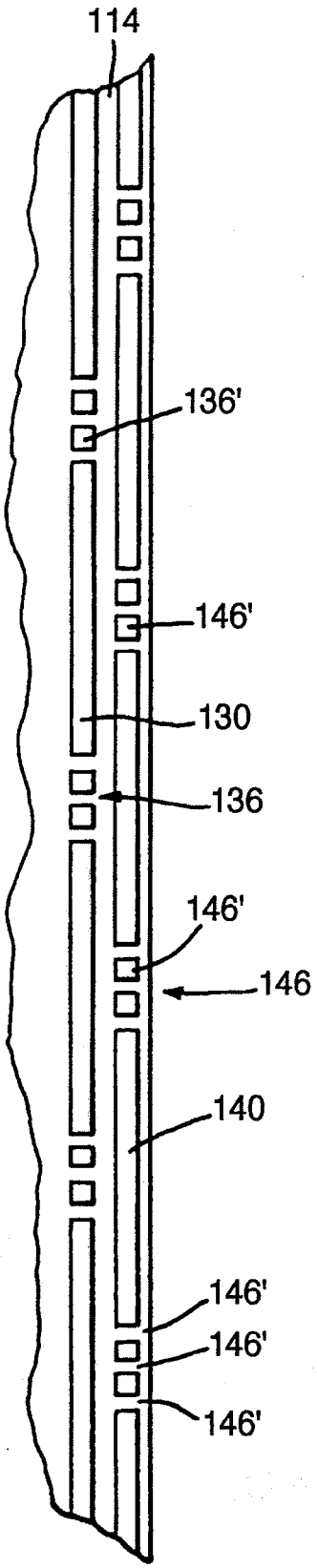
114
136'
146'
130
136
146'
146
140
146'
146'
146'

FIG.6

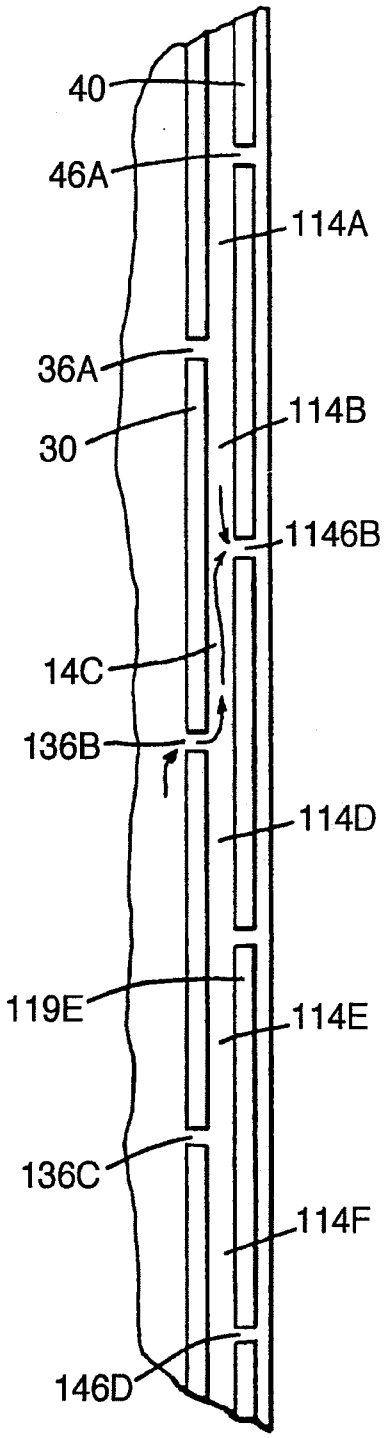
40
46A
114A
36A
30
114B
1146B
14C
136B
114D
119E
114E
136C
114F
146D

FIG.7

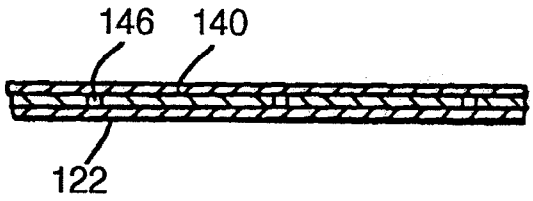

FIG.8

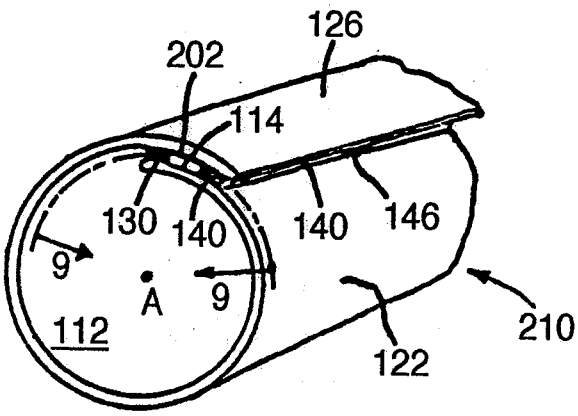

FIG.9

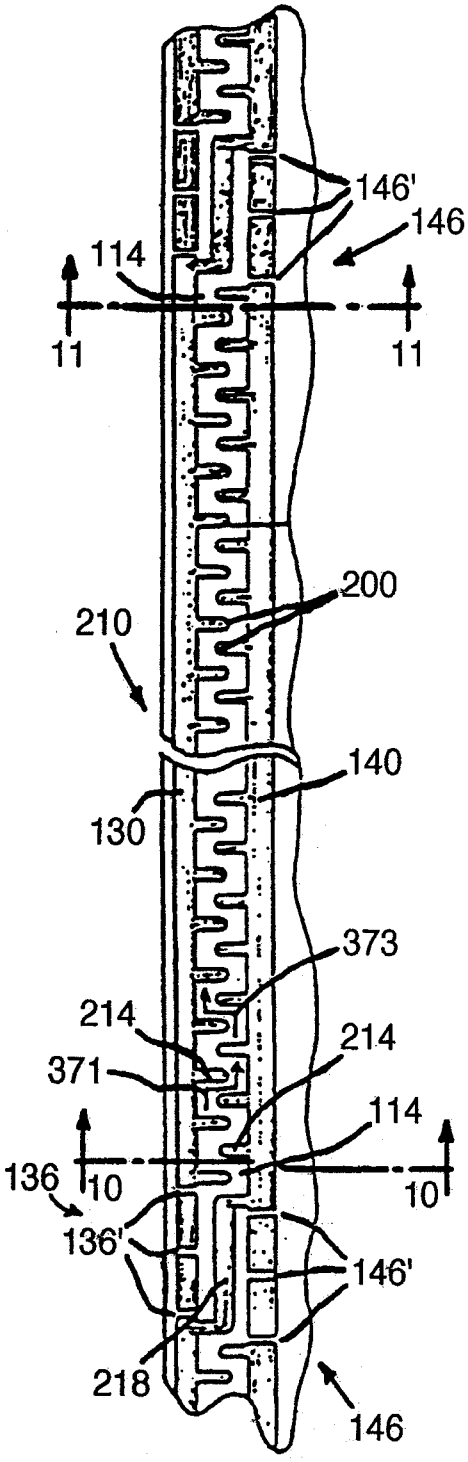

FIG.10

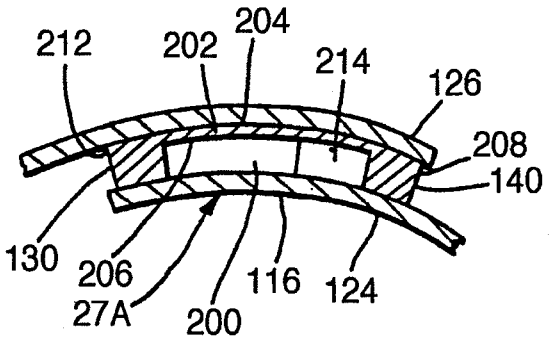

FIG.11

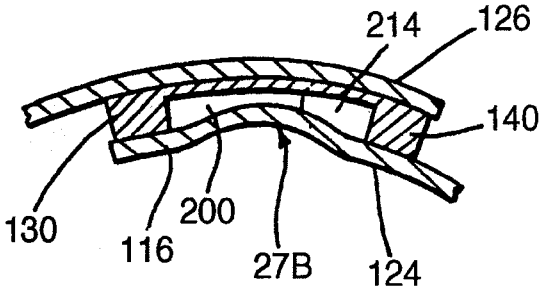

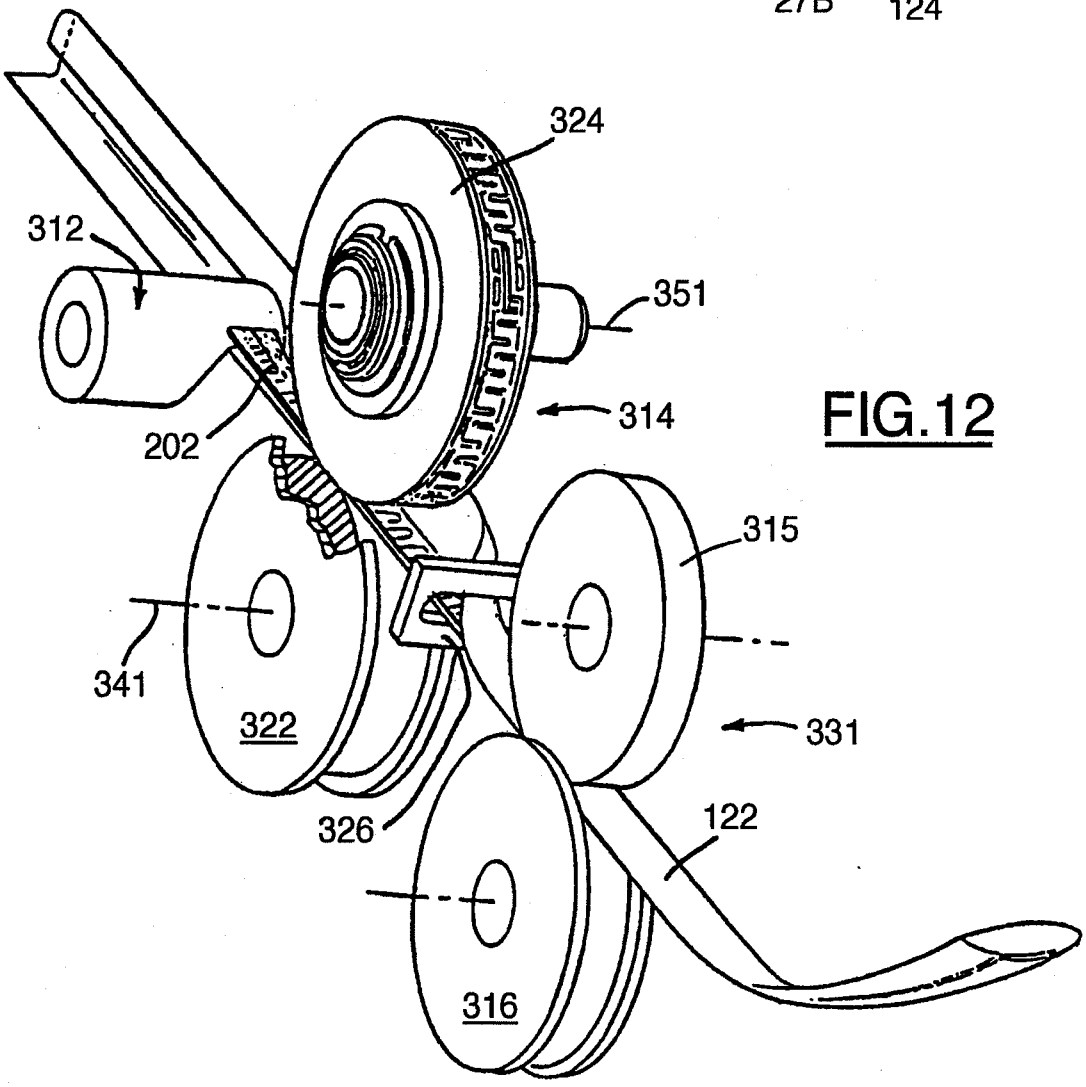

FIG.12

FIG.13

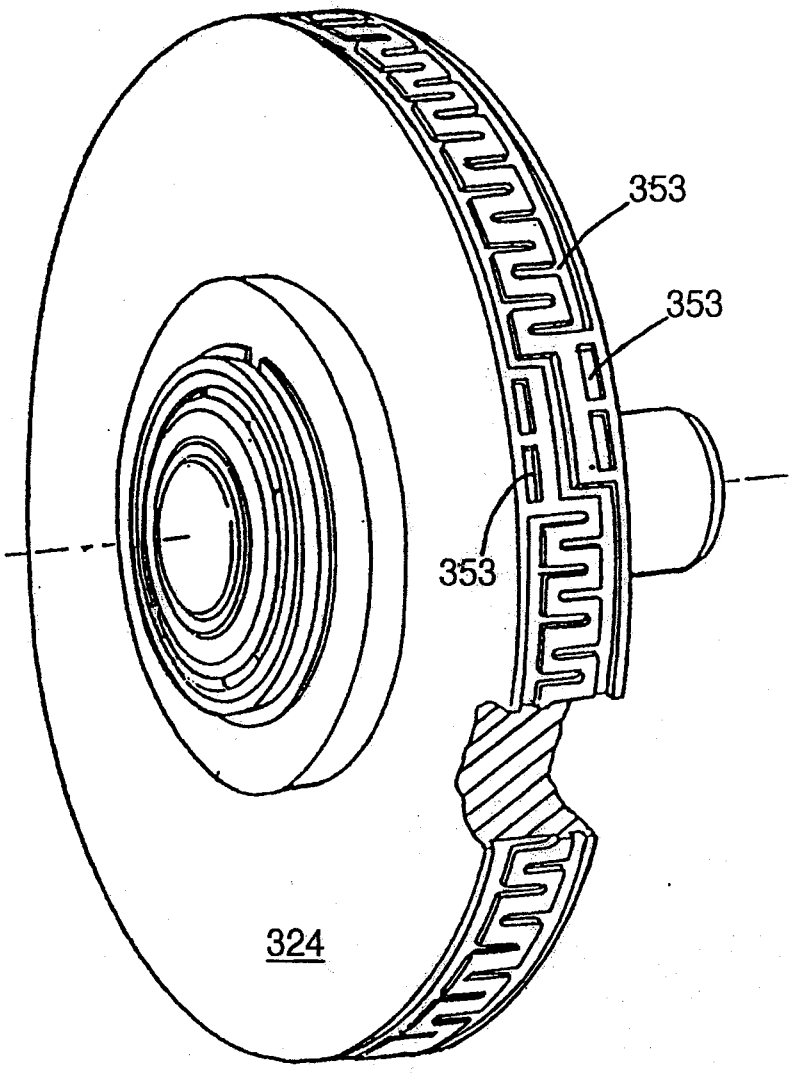

UNITED STATES PATENT AND TRADEMARK OFFICE

Commissioner for Patents
United States Patent and Trademark Office
P.O. Box 1450
Alexandria, VA 22313-1450
www.uspto.gov

LEIGHTON K. CHONG
PATENT ATTORNEY
133 KAAI STREET
HONOLULU HI 96821

MAILED
JAN 17 2012
OFFICE OF PETITIONS

In re Application of
Alan JOAQUIN
Application No.: 12/604,132
Filed: 22 October 2009
Attorney Docket No.: EBIO-P1
For: MODULAR TUBULAR-SOCK GARDEN GROWING SYSTEM

: DECISION ON REQUEST TO
: PARTICIPATE IN THE PATENT
: PROSECUTION HIGHWAY
: PROGRAM AND PETITION
: TO MAKE SPECIAL UNDER
: 37 CFR 1.102(a)

This is a decision on the request to participate in the PCT Patent Prosecution Highway (PCT-PPH) pilot program and the petition under 37 CFR 1.102(a), filed on 23 August 2011, to make the above-identified application special.

The request and petition are **GRANTED**.

Discussion

A grantable request to participate in the PCT-PPH pilot program and petition to make special require:

(1) The U.S. application must have an eligible relationship to one or more PCT applications where the ISA or IPEA are the JPO, EPO, KIPO, NPI, NBPR, or USPTO;

(2) At least one claim in the PCT application has novelty, inventive step, and industrial applicability and must be free of any observations in Box VIII in the latest work product in the international stage or applicant must identify and explain why the claim(s) is/are not subject to the observation in Box VIII;

(3) Applicant must submit a copy of the claim(s) from the PCT application(s) that have novelty, inventive step, and industrial applicability along with an English translation thereof and a statement that the English translation is accurate, if the claims are not in the English language;

(4) All the claims in the U.S. application must sufficiently correspond or be amended to sufficiently correspond to the claim(s) that have novelty, inventive step, and industrial applicability in the PCT application(s);

(5) Examination of the U.S. application has not begun;

(6) Applicant must submit a copy of the latest international work product from the PCT application indicating that the claim(s) have novelty, inventive step, and industrial applicability along with an English translation thereof and a statement that the English translation is accurate if the latest international work product is not in the English language;

(7) Applicant must submit an IDS listing the documents cited by the PCT examiner in the international work product along with copies of documents except U.S. patents or U.S. patent application publications.

The request to participate in the PCT-PPH pilot program and petition comply with the above requirements. Accordingly, the above-identified application has been accorded "special" status.

Telephone inquiries concerning this decision should be directed to Michelle R. Eason at 571-272-4231.

All other inquiries concerning the examination or status of the application is accessible in the PAIR system at http://www.uspto.gov/ebc.index.html.

This application will be forwarded to the examiner for action on the merits commensurate with this decision.

Thurman K. Page

Thurman K. Page
Petitions Examiner
Office of Petitions

PTO/SB/20PCT-KR (06-10)
Approved for use through 01/31/2012. OMB 0651-0058
U.S. Patent and Trademark Office; U. S. DEPARTMENT OF COMMERCE
Under the Paperwork Reduction Act of 1995, no persons are required to respond to a collection of information unless it displays a valid OMB control number.

REQUEST FOR PARTICIPATION IN THE PATENT COOPERATION TREATY - PATENT PROSECUTION HIGHWAY (PCT-PPH) PILOT PROGRAM BETWEEN THE KOREAN INTELLECTUAL PROPERTY OFFICE (KIPO) AND THE USPTO

Application No:	12/604132	Filing date:	2009-10-22
First Named Inventor:	A. Joaquin		
Title of the Invention:	MODULAR TUBULAR-SOCK GARDEN GROWING SYSTEM		

THIS REQUEST FOR PARTICIPATION IN THE PCT-PPH PILOT PROGRAM ALONG WITH THE REQUIRED DOCUMENTS MUST BE SUBMITTED VIA EFS-WEB. INFORMATION REGARDING EFS-WEB IS AVAILABLE AT HTTP://WWW.USPTO.GOV/EBC/EFS_HELP.HTML

APPLICANT HEREBY REQUESTS PARTICIPATION IN THE PCT-PPH PROGRAM AND PETITIONS TO MAKE THE ABOVE-IDENTIFIED APPLICATION SPECIAL UNDER THE PCT-PPH PROGRAM.

The above-identified application is (1) a national stage entry of the corresponding PCT application, or (2) a national stage entry of another PCT application which claims priority to the corresponding PCT application, or (3) a national application that claims domestic/ foreign priority to the corresponding PCT application, or (4) a national application which forms the basis for the priority claim in the corresponding PCT application, or (5) a continuing application of a U.S. application that satisfies one of (1) to (4) above, or (6) a U.S. application that claims domestic benefit to a U.S. provisional application which forms the basis for the priority claim in the corresponding PCT application.

The corresponding PCT application number(s) is/are: US2010/052345

The international filing date of the corresponding PCT application(s) is/are: 2010-10-12

I. List of Required Documents:

a. **A copy of the latest international work product (WO/ISA, WO/IPEA, or IPER) in the above–identified corresponding PCT application(s)**

- [x] Is attached.
- [ ] Is not attached because the document is already in the U.S. application.

b. **A copy of all claims which were indicated as having novelty, inventive step and industrial applicability in the above-identified corresponding PCT application(s).**

- [ ] Is attached.
- [ ] Is not attached because the document is already in the U.S. application.

Did not check but a copy is provided

c. **English translations of the documents in a. and b. above are attached (if the documents are not in the English language). A statement that the English translation is accurate is attached for the document in b. above.**

This collection of information is required by 35 U.S.C. 119, 37 CFR 1.55, and 37 CFR 1.102(d). The information is required to obtain or retain a benefit by the public, which is to file (and by the USPTO to process) an application. Confidentiality is governed by 35 U.S.C. 122 and 37 CFR 1.11 and 1.14. This collection is estimated to take 2 hours to complete, including gathering, preparing, and submitting the completed application form to the USPTO. Time will vary depending upon the individual case. Any comments on the amount of time you require to complete this form and/or suggestions for reducing this burden should be sent to the Chief Information Officer, U.S. Patent and Trademark Office, U.S. Department of Commerce, P.O. Box 1450, Alexandria, VA 22313-1450. DO NOT SEND FEES OR COMPLETED FORMS TO THIS ADDRESS.

Approved for use through 01/31/2012. OMB 0651-0058
U.S.Patent and Trademark Office; U.S. DEPARTMENT OF COMMERCE

Under the Paperwork Reduction Act of 1995, no persons are required to respond to a collection of information unless it displays a valid OMB control number.

REQUEST FOR PARTICIPATION IN THE PCT-PPH PILOT PROGRAM BETWEEN THE KIPO AND THE USPTO

(continued)

Application No.:	12/604132
First Named Inventor:	A. Joaquin

d. **(1) An information disclosure statement listing the documents cited in the international work products (ISR, WO/ISA, WO/IPEA, IPER) of the corresponding PCT application.**

☑ Is attached

☐ Has already been filed in the above-identified U.S. application on _____

(2) Copies of all documents (except) for U.S. patents or U.S. patent application publications)

☑ Are attached.

☐ Have already been filed in the above-identified U.S. application on _____

II. Claims Correspondence Table:

Claims in US Application	Patentable Claims in the corresponding PCT Application	Explanation regarding the correspondence
1-20	1-20	The same claims were submitted in the U.S. and PCT cases

III. All the claims in the US application sufficiently correspond to the patentable claims in the corresponding PCT application.

Signature Leighton K Chong	Date 2011-08-23
Name (Print/Typed) Leighton K. Chong	Registration Number 27,621

UNITED STATES PATENT AND TRADEMARK OFFICE

Commissioner for Patents
United States Patent and Trademark Office
P.O. Box 1450
Alexandria, VA 22313-1450
www.uspto.gov

KILPATRICK TOWNSEND & STOCKTON LLP
TWO EMBARCADERO CENTER
EIGHTH FLOOR
SAN FRANCISCO, CA 94111-3834

MAILED

SEP 21 2011

OFFICE OF PETITIONS

In re Patent No. 7,854,506 :
Issue Date: December 21, 2010 :
Application No. 12/604,155 : NOTICE
Filed: October 22, 2009 :
Attorney Docket No. 93193-804407 (000200USK2)

This is a notice regarding your request for acceptance of a fee deficiency submission under 37 CFR 1.28. On September 1, 1998, the Court of Appeals for the Federal Circuit held that 37 CFR 1.28(c) is the sole provision governing the time for correction of the erroneous payment of the issue fee as a small entity. **See DH Technology v. Synergystex International, Inc. 154 F.3d 1333, 47 USPQ2d 1865 (Fed. Cir. Sept. 1, 1998).**

The Office no longer investigates or rejects original or reissue applications under 37 CFR 1.56. **1098 Off. Gaz. Pat. Office 502 (January 3, 1989)**. Therefore, nothing in this Notice is intended to imply that an investigation was done.

Your fee deficiency submission under 37 CFR 1.28 is hereby **ACCEPTED**.

Inquiries related to this communication should be directed to Irvin Dingle at (571) 272-3210.

Irvin Dingle
Petitions Examiner
Office of Petitions

UNITED STATES PATENT AND TRADEMARK OFFICE

Commissioner for Patents
United States Patent and Trademark Office
P.O. Box 1450
Alexandria, VA 22313-1450
www.uspto.gov

PERKINS COIE LLP
P.O. BOX 1208
SEATTLE, WA 98111-1208

MAILED
JAN 06 2012
OFFICE OF PETITIONS

In re Application of Druzgalski et al. Application No. 12/604,164 Filed: October 22, 2009 Attorney Docket No. 1001U002	: : : : :	DECISION ON PETITION TO WITHDRAW FROM RECORD

This is a decision on the Request to Withdraw as attorney or agent of record under 37 C.F.R. § 1.36(b), filed December 2, 2011.

The request is **NOT APPROVED** because it is moot.

A review of the file record indicates that on December 20, 2011 the power of attorney to Perkins Coie LLP was revoked by the assignee of the patent application. Accordingly, the request to withdraw under 37 C.F.R. § 1.36(b) is moot.

All future communications from the Office will be directed to the below-listed address until otherwise notified by applicant.

Telephone inquiries concerning this decision should be directed to the undersigned at 571- 272- 7751. All other inquiries concerning either the examination or status of the application should be directed to the Technology Center.

/Joan Olszewski/
Joan Olszewski
Petitions Examiner
Office of Petitions

cc: Charles A. Rattner
30 School Street
Burlington CT 06013-2569

UNITED STATES PATENT AND TRADEMARK OFFICE

Commissioner for Patents
United States Patent and Trademark Office
P.O. Box 1450
Alexandria, VA 22313-1450
www.uspto.gov

MAIL

AUG 05 2010
DIRECTOR'S OFFICE
TECHNOLOGY CENTER 2600

BLAKELY SOKOLOFF TAYLOR & ZAFMAN LLP
1279 OAKMEAD PARKWAY
SUNNYVALE CA 94085-4040

In re Application of	:	
KURASHIGE, TAKEHIKO, et al.	:	DECISION ON REQUEST TO
Application No. 12/604,226	:	PARTICIPATE IN PATENT
Filed: October 22, 2009	:	PROSECUTION HIGHWAY
Attorney Docket No. **6639P809**	:	PROGRAM AND PETITION
	:	TO MAKE SPECIAL UNDER
	:	37 CFR 1.102(d)

This is a decision on the request for reconsideration to participate in the Patent Prosecution Highway (PPH) program and the petition under 37 CFR 1.102(d), filed July 2, 2010 to make the above-identified application special.

The request and petition are **GRANTED**.

A grantable request to participate in the PPH program and petition to make special require:

(1) The U.S. application must validly claim priority under 35 U.S.C. 119(a) to one or more applications filed in the JPO;
(2) Applicant must submit a copy of the allowable/patentable claim(s) from the JPO application(s) along with an English translation thereof and a statement that the English translation is accurate;
(3) All the claims in the U.S. application must sufficiently correspond or be amended to sufficiently correspond to the allowable/patentable claim(s) in the JPO application(s);
(4) Examination of the U.S. application has not begun;
(5) Applicant must submit a copy of all the office actions from each of the JPO application(s) containing the allowable/patentable claim(s) along with an English translation thereof and a statement that the English translation is accurate;
(6) Applicant must submit an IDS listing the documents cited by the JPO examiner in the JPO office action along with copies of documents except U.S. patents or U.S. patent application publications; and
(7) The required petition fee under 37 CFR 1.17(h).

The request to participate in the PPH program and petition comply with the above requirements. Accordingly, the above-identified application has been accorded "special" status.

Telephone inquiries concerning this decision should be directed to Kenneth Wieder at 571-272-2986.

All other inquiries concerning the examination or status of the application should be directed to Patent Application Information Retrieval (PAIR) system.

The application is being forwarded to the examiner for action on the merits commensurate with this decision.

/Kenneth A. Wieder/

Kenneth Wieder
Quality Assurance Specialist
Technology Center 2600
Communications

UNITED STATES PATENT AND TRADEMARK OFFICE

Commissioner for Patents
United States Patent and Trademark Office
P.O. Box 1450
Alexandria, VA 22313-1450
www.uspto.gov

MAILED

SEP 15 2010

OFFICE OF PETITIONS

GARDERE WYNNE SEWELL LLP
INTELLECTUAL PROPERTY SECTION
3000 THANKSGIVING TOWER
1601 ELM ST
DALLAS TX 75201-4761

In re Application of MCGARRY et al. Application No. 12/604,253 Filed: 10/22/2009 Attorney Docket No. 132670-1012	DECISION NOTING JOINDER OF INVENTOR AND PETITION UNDER 37 CFR 1.47(a) MOOT

This is in response to the petition under 37 CFR 1.47(a) filed April 12, 2010.

After filing the present petition, petitioners submitted a Declaration signed by a previously non-signing inventor in compliance with 37 CFR 1.63. Accordingly, the petition is dismissed as moot.

In view of the joinder of the inventor, further consideration under 37 CFR 1.47(a) is not necessary. This application does not have any Rule 1.47 status and no such status should appear on the file wrappr. This application need not be returned to this Office for any further consideration under 37 CFR 1.47(a).

The application file is being forwarded to Technology Center Art Unit 2877 for examination in due course.

Telephone inquiries should be directed to the undersigned at (571) 272-3211.

C. T. Donnell

Christina Tartera Donnell
Senior Petitions Attorney
Office of Petitions

UNITED STATES PATENT AND TRADEMARK OFFICE

Commissioner for Patents
United States Patent and Trademark Office
P.O. Box 1450
Alexandria, VA 22313-1450
www.uspto.gov

CLIFFORD H. KRAFT
320 ROBIN HILL DR.
NAPERVILLE IL 60540

MAILED

SEP 26 2011

OFFICE OF PETITIONS

In re Application of	:	
DJURIVIC	:	
Application No. 12/604,261	:	DECISION ON PETITION
Filed: October 22, 2009	:	TO MAKE SPECIAL UNDER
Attorney Docket No. DJUROVIC-CLOSURE	:	37 CFR 1.102(c)(1)
	:	

This is a decision on the petition under 37 CFR 1.102(c)(1), filed September 8, 2011, to make the above-identified application special based on applicant's age as set forth in M.P.E.P. § 708.02, Section IV.

The petition is **GRANTED**.

A grantable petition to make an application special under 37 CFR 1.102(c)(1) and MPEP § 708.02, Section IV: Applicant's Age must be accompanied by evidence showing that at least one of the applicants is 65 years of age, or more, such as a birth certificate or a statement by applicant. No fee is required

The instant petition includes a statement made by registered attorney Clifford H. Kraft, which will be treated as the result of the attorney having evidence that at least one of the applicants is 65 years of age or more. In the event that such evidence is not with the attorney, the Office should be notified immediately. Accordingly, the above-identified application has been accorded "special" status.

Telephone inquiries concerning this decision should be directed to undersigned at (571) 272-6735.

All other inquiries concerning either the examination or status of the application should be directed to the Technology Center at (571) 272-3700.

The application is being forwarded to Technology Center Art Unit 3761 for action on the merits commensurate with this decision.

/Diane C. Goodwyn/
Diane C. Goodwyn
Petitions Examiner
Office of Petitions

SPE RESPONSE FOR CERTIFICATE OF CORRECTION

Paper No.:20110930

DATE : September 30, 2011

TO SPE OF : ART UNIT 2627

SUBJECT : Request for Certificate of Correction on Patent No.: RE42,451 E

A response is requested with respect to the accompanying request for a certificate of correction.

Please complete this form and return with file, within **7** days to:
Certificates of Correction Branch - ST (South Tower) 9A22
Palm location **7590** - Tel. No. (703) 305-8309

With respect to the change(s) requested, correcting Office and/or Applicant's errors, should the patent read as shown in the certificate of correction? No new matter should be introduced, nor should the scope or meaning of the claims be changed.

Thank You For Your Assistance **Certificates of Correction Branch**

The request for issuing the above-identified correction(s) is hereby:

Note your decision on the appropriated box.

☒ **Approved** All changes apply.

☐ **Approved in Part** Specify below which changes **do not** apply.

☐ **Denied** State the reasons for denial below.

Comments:

/MOHAMMAD GHAYOUR/
Supervisory Patent Examiner, Art Unit 2627

UNITED STATES PATENT AND TRADEMARK OFFICE

Commissioner for Patents
United States Patent and Trademark Office
P.O. Box 1450
Alexandria, VA 22313-1450
www.uspto.gov

HAYNES BEFFEL & WOLFELD LLP
P O BOX 366
HALF MOON BAY CA 94019

MAILED

OCT 26 2011

OFFICE OF PETITIONS

In re Application of :
Torbjörn Sandström et al. :
Application No. 12/604,317 : DECISION ON PETITION
Filed: October 22, 2009 :
Attorney Docket No. **MLSE 1089-2/P00336** :

This is a decision on the petition under the unintentional provisions of 37 CFR 1.137(b), filed October 17, 2011, to revive the above-identified application.

The petition is **GRANTED**.

This application became abandoned for failure to timely pay the issue and publication fees on or before October 13, 2011, as required by the Notice of Allowance and Fee(s) Due, mailed July 13, 2011. Accordingly, the date of abandonment of this application is October 14, 2011.

The petition satisfies the requirements of 37 CFR 1.137(b) in that petitioner has supplied (1) the reply in the form of payment of the issue fee of $1,740 and the publication fee of $300, (2) the petition fee of $1,860; and (3) a proper statement of unintentional delay.

Telephone inquiries concerning this decision should be directed to JoAnne Burke at 571-272-4584.

This application is being referred to the Office of Data Management for processing into a patent.

JoAnne Burke
Petitions Examiner
Office of Petitions

UNITED STATES PATENT AND TRADEMARK OFFICE

Commissioner for Patents
United States Patent and Trademark Office
P.O. Box 1450
Alexandria, VA 22313-1450
www.uspto.gov

MAILED

SEP 10 2010

OFFICE OF PETITIONS

VOLPE AND KOENIG, P.C.
DEPT. ICC
UNITED PLAZA
30 SOUTH 17TH STREET
PHILADELPHIA PA 19103

In re Application of Ana Lucia Pinhero et al Application No. 12/604,500 Filed: October 23, 2009 Attorney Docket No. IPH-2-2195US02	: : : : : :	DECISION GRANTING STATUS UNDER 37 CFR 1.47(a)

This is in response to the petition under 37 CFR 1.47(a), filed June 9, 2010.

The petition is **GRANTED.**

Petitioner has shown that the non-signing inventor has refused to join in the filing of the above-identified application.

The application and papers have been reviewed and found in compliance with 37 CFR 1.47(a). This application is hereby accorded Rule 1.47(a) status.

As provided in 37 CFR 1.47(c), this Office will forward notice of this application's filing to the non-signing inventor at the address given in the petition. Notice of the filing of this application will also be published in the Official Gazette.

This application is being referred to Technology Center AU 2618 for examination by the Examiner in the normal course of business.

Telephone inquiries regarding this decision should be directed to the undersigned at (571) 272-3208.

/KOC/
Karen Creasy
Petitions Examiner
Office of Petitions

UNITED STATES PATENT AND TRADEMARK OFFICE

Commissioner for Patents
United States Patent and Trademark Office
P.O. Box 1450
Alexandria, VA 22313-1450
www.uspto.gov

MAILED

SEP 09 2010

OFFICE OF PETITIONS

VOLPE AND KOENIG, P.C.
DEPT. ICC
UNITED PLAZA
30 SOUTH 17TH STREET
PHILADELPHIA PA 19103

In re Application of	:	
Ana Lucia Pinhero et al	:	DECISION GRANTING STATUS
Application No. 12/604,500	:	UNDER 37 CFR 1.47(a)
Filed: October 23, 2009	:	
Attorney Docket No. IPH-2-2195US02	:	

This is in response to the petition under 37 CFR 1.47(a), filed June 9, 2010.

The petition is **GRANTED.**

Petitioner has shown that the non-signing inventor has refused to join in the filing of the above-identified application.

The application and papers have been reviewed and found in compliance with 37 CFR 1.47(a). This application is hereby accorded Rule 1.47(a) status.

As provided in 37 CFR 1.47(c), this Office will forward notice of this application's filing to the non-signing inventor at the address given in the petition. Notice of the filing of this application will also be published in the Official Gazette.

This application is being referred to Technology Center AU 2618 for examination by the Examiner in the normal course of business.

Telephone inquiries regarding this decision should be directed to the undersigned at (571) 272-3208.

/KOC/
Karen Creasy
Petitions Examiner
Office of Petitions

UNITED STATES PATENT AND TRADEMARK OFFICE

Commissioner for Patents
United States Patent and Trademark Office
P.O. Box 1450
Alexandria, VA 22313-1450
www.uspto.gov

SIEMENS CORPORATION
INTELLECTUAL PROPERTY DEPARTMENT
170 WOOD AVENUE SOUTH
ISELIN NJ 08830

MAILED

OCT 25 2010

OFFICE OF PETITIONS

In re Application of	:	
Ali Kamen, et al.	:	
Application No. 12/604,504	:	DECISION ON PETITION
Filed: October 23, 2009	:	
Attorney Docket No. 2008P20830 US01	:	

This is a decision on the petition under the unintentional provisions of 37 CFR 1.137(b), filed September 27, 2010, to revive the above-identified application.

The petition is **GRANTED**.

The application became abandoned for failure to reply in a timely manner to the Notice to File Missing Parts of Nonprovisional Application (Notice), mailed November 10, 2009. The Notice set a period for reply of two (2) months from the mail date of the Notice. No extensions of time under the provisions of 37 CFR 1.136(a) were obtained. Accordingly, the application became abandoned on January 11, 2010. The Notice of Abandonment was mailed July 16, 2010.

The petition satisfies the requirements of 37 CFR 1.137(b) in that petitioner has supplied (1) the reply in the form of a declaration and $130 surcharge, (2) the petition fee of $1,620, and (3) a proper statement of unintentional delay.

An extension of time under 37 CFR 1.136 must be filed prior to the expiration of the maximum extendable period for reply. See In re Application of S., 8 USPQ2d 1630, 1631 (Comm'r Pats. 1988). Since the $2,350 extension of time fee submitted on June 30, 2010 was subsequent to the maximum extendable period for reply, this fee is unnecessary and will be credited to petitioner's deposit account.

Telephone inquiries concerning this decision should be directed to Terri Johnson at (571) 272-2991.

This application is being referred to the Office of Patent Application Processing for appropriate action on the reply received.

/Terri Johnson/
Terri Johnson
Petitions Examiner
Office of Petitions

UNITED STATES PATENT AND TRADEMARK OFFICE

UNITED STATES DEPARTMENT OF COMMERCE
United States Patent and Trademark Office
Address: COMMISSIONER FOR PATENTS
P.O. Box 1450
Alexandria, Virginia 22313-1450
www.uspto.gov

APPLICATION NO.	FILING DATE	FIRST NAMED INVENTOR	ATTORNEY DOCKET NO.	CONFIRMATION NO.
12/604,511	10/23/2009	ANTHONY COX	31045-19d2	8676

43914 7590 09/21/2011
JOSEPH SWAN, A PROFESSIONAL CORPORATION
1334 PARKVIEW AVENUE, SUITE100
MANHATTAN BEACH, CA 90266

EXAMINER
SANDERS, JAMES M

ART UNIT	PAPER NUMBER
1743	

MAIL DATE	DELIVERY MODE
09/21/2011	PAPER

Please find below and/or attached an Office communication concerning this application or proceeding.

The time period for reply, if any, is set in the attached communication.

UNITED STATES PATENT AND TRADEMARK OFFICE

Commissioner for Patents
United States Patent and Trademark Office
P.O. Box 1450
Alexandria, VA 22313-1450
www.uspto.gov

SEP 2 1 2011

wk

Mailed :

In re Application of	:	DECISION ON
Cox et al.	:	PETITION
Serial No. 12/604,511	:	
Filed: October 23, 2009	:	
For: SHOE BOTTOM HAVING INTERSPERSED MATERIALS		

This is a decision on the PETITION FILED UNDER 37 CFR 1.144 filed on September 6, 2011.

The Examiner initially required a restriction on November 19, 2010 between:

Group I, claims 33-42, drawn to a method of manufacturing the bottom portion of shoe, classified in class 264, subclass 259 and

Group II, claims 43-52 drawn to a bottom portion of a shoe classified in class 36, subclass 25R.

The Examiner found that Inventions I and II are related as product and process of making. The inventions are distinct if either or both of the following can be shown: (1) that the process as claimed can be used to make another materially different product or (2) that the product as claimed can be made by another materially different process.

The Examiner stated that the product as claimed can be made by another and materially different process such as one using a pattern to cut a shoe bottom from a natural composite like a piece of wood which inherently has surface indentations and different chemical materials bonded to each other in a plurality of the indentations.

Applicants elected Group I on December 9, 2010 and further amended independent claim 43 so that it now directly references the limitations of independent claim 33.

> *"A bottom portion of a shoe that has been manufactured in accordance with the method of claim 33".*

The Examiner maintained the restriction and took the position that even though product-by-process claims are limited by and defined by the process, determination of patentability is based on the product itself. The Examiner stated that the product as

claimed can be made by another bad materially different process such as by mixing a base material with a natural material wherein the natural material is at least 50% of the mixture, and molding the mixture to form a shoe bottom. The Examiner further asserted there would be a serious search and examination burden because the inventions have acquired a separate status in the art in view of their classifications and the inventions would require a different field of search.

Applicants state that the Examiner's proposed mixture to form a shoe bottom would result in a different structure distinguishable from a shoe bottom portion resulting from the method recited in independent claim 33, in which a second material is bonded into indentations in a base material. Applicants do not believe that the Examiner has identified a materially different process by which a structure encompassed within independent claim 43 could have been made.

Claim 33: (Currently Amended)

A method of manufacturing the bottom portion of a shoe, comprising:

forming a base portion from a base material such that the base portion has a bottom surface that includes indentations; and

bonding a second material into a plurality of the indentations so as to provide a shoe bottom portion,

wherein the second material comprises reconstituted leather and has a thickness relative to the indentations such that, in use, both the base material and the second material contact a ground surface simultaneously, and

wherein the second material is a natural material and constitutes at least 50% of the ground-contacting portion of the bottom surface.

Applicants' further state there is a lack of evidence that one of ordinary skill in the art would consider two materials that have been mixed together and the allowed to harden as being "bonded" together. If the materials were considered "bonded", the result would be a significantly different structure produced according to claim 33 in which a base potion is formed from a base material, such that the base portion has a bottom surface that includes indentations and a second material comprising reconstituted leather is bonded into a plurality of the indentations so as to provide a shoe bottom portion.

The Examiner has not identified a materially different process by which a structure encompassed with in independent claim 43 could have been made.

12/604,511
DECISION

The petition is **GRANTED**.

The restriction is withdrawn.

/W. GARY JONES/
Director, Technology Center 1700
Chemical and Materials Engineering

Joseph G. Swan
JOSEPH SWAN, A PROFESSIONAL CORPORATION
1334 PARKVIEW AVENUE, SUITE100
MANHATTAN BEACH CA 90266

UNITED STATES PATENT AND TRADEMARK OFFICE

UNITED STATES DEPARTMENT OF COMMERCE
United States Patent and Trademark Office
Address: COMMISSIONER FOR PATENTS
P.O. Box 1450
Alexandria, Virginia 22313-1450
www.uspto.gov

APPLICATION NO.	FILING DATE	FIRST NAMED INVENTOR	ATTORNEY DOCKET NO.	CONFIRMATION NO.
12/604,514	10/23/2009	Robert P. Morris	1394C/US	8680

52354 7590 10/07/2011
SCENERA RESEARCH, LLC
JENKINS, WILSON, TAYLOR & HUNT, P.A.
5400 Trinity Road
Suite 303
Raleigh, NC 27607

EXAMINER
VU, KIEU D

ART UNIT	PAPER NUMBER
2173	

MAIL DATE	DELIVERY MODE
10/07/2011	PAPER

Please find below and/or attached an Office communication concerning this application or proceeding.

The time period for reply, if any, is set in the attached communication.

UNITED STATES PATENT AND TRADEMARK OFFICE

Commissioner for Patents
United States Patent and Trademark Office
P.O. Box 1450
Alexandria, VA 22313-1450
www.uspto.gov

SCENERA RESEARCH, LLC
JENKINS, WILSON, TAYLOR & HUNT, P.A.
5400 Trinity Road
Suite 303
Raleigh NC 27607

In re Application of:
MORRIS, Robert
Application No. 12/604,514
Filed: October 23, 2009
For: **METHODS, SYSTEMS, AND COMPUTER PROGRAM PRODUCTS FOR CHARACTERIZING LINKS TO RESOURCES NOT ACTIVATED**

DECISION ON PETITION UNDER 37 C.F.R. § 1.103(a)

This is a decision on the petition for suspension of prosecution under 37 CFR § 1.103(a) filed on September 22, 2011.

The petition is **GRANTED**.

Pursuant to applicant's requests filed on September 22, 2011, action by the Office is suspended on this application under 37 CFR § 1.103(a) for a period of ***three (3) months from the mailing date of this letter***. At the end of this period, applicant is required to notify the examiner and request continuance of prosecution or a further suspension. See MPEP § 709.

Suspension of action under 37 CFR § 1.103(a)-(d) at the applicant's request will cause a reduction in patent term adjustment accumulated (if any) under 37 CFR § 1.703. The reduction is equal to the number of days beginning on the date a request for suspension of action was filed and ending on the date of the termination of the suspension. See 37 CFR § 1.704(c)(1).

Any inquiry concerning this decision should be directed to Eddie C. Lee whose telephone number is (571) 272-1732.

/Eddie C. Lee/

Quality Assurance Specialist, TC 2100

UNITED STATES PATENT AND TRADEMARK OFFICE

UNITED STATES DEPARTMENT OF COMMERCE
United States Patent and Trademark Office
Address: COMMISSIONER FOR PATENTS
P.O. Box 1450
Alexandria, Virginia 22313-1450
www.uspto.gov

APPLICATION NO.	FILING DATE	FIRST NAMED INVENTOR	ATTORNEY DOCKET NO.	CONFIRMATION NO.
12/604,514	10/23/2009	Robert P. Morris	1394C/US	8680

52354 7590 01/13/2012
SCENERA RESEARCH, LLC
JENKINS, WILSON, TAYLOR & HUNT, P.A.
5400 Trinity Road
Suite 303
Raleigh, NC 27607

EXAMINER
VU, KIEU D

ART UNIT	PAPER NUMBER
2173	

MAIL DATE	DELIVERY MODE
01/13/2012	PAPER

Please find below and/or attached an Office communication concerning this application or proceeding.

The time period for reply, if any, is set in the attached communication.

UNITED STATES PATENT AND TRADEMARK OFFICE

Commissioner for Patents
United States Patent and Trademark Office
P.O. Box 1450
Alexandria, VA 22313-1450
www.uspto.gov

John A. Demos
SCENERA RESEARCH, LLC
5400 Trinity Road
Suite 303
Raleigh, North Carolina 27607

In re Application of: Robert P. MORRIS Appl. No.: 12/604,514 Filed: October 23, 2009 For: METHODS, SYSTEMS, AND COMPUTER PROGRAM PRODUCTS FOR CHARACTERIZING LINKS TO RESOURCES NOT ACTIVATED	DECISION ON PETITION UNDER 37 CFR § 1.103(a)

This is a decision on the petition for suspension of prosecutions under 37 CFR § 1.103(a) filed on 09 January 2012.

The petition is **GRANTED**.

Pursuant to applicant's requests filed on 09 January 2012, action by the Office is suspended on this application under 37 CFR § 1.103(a) for a period of ***three (3) months from the mailing date of this letter***. At the end of this period, applicant is required to notify the examiner and request continuance of prosecution or a further suspension. See MPEP § 709.

Suspension of action under 37 CFR § 1.103(a)-(d) at the applicant's request will cause a reduction in patent term adjustment accumulated (if any) under 37 CFR § 1.703. The reduction is equal to the number of days beginning on the date a request for suspension of action was filed and ending on the date of the termination of the suspension. See 37 CFR § 1.704(c)(1).

Any inquiry concerning this decision should be directed to the undersigned whose telephone number is (571) 272-3613.

/Vincent N. Trans/
Vincent N. Trans, QAS
Technology Center 2100
Computer Architecture and Software

UNITED STATES PATENT AND TRADEMARK OFFICE

Commissioner for Patents
United States Patent and Trademark Office
P.O. Box 1450
Alexandria, VA 22313-1450
www.uspto.gov

JUL 18 2011

RICK B. YEAGER, ATTORNEY
10805 MELLOW LANE
AUSTIN TX 78759

In re Application of: Manley et al. Application No.: 12/604639 Filed: October 23, 2009 Title: METHOD AND APPARATUS FOR VERTICAL-AXIS TURBINE	DECISION ON PETITION TO MAKE SPECIAL FOR NEW APPLICATION UNDER 37 C.F.R. § 1.102 & M.P.E.P. § 708.02

This is a decision on the petition filed on June 6, 2011 to make the above-identified application special for accelerated examination procedure under 37 C.F.R. § 1.102(d).

The petition to make the application special is **DENIED**.

REGULATION AND PRACTICE

To be eligible for accelerated examination under 37 C.F.R. § 1.102(d) and pursuant to the "Change to Practice for Petitions in Patent Applications to Make Special and for Accelerated Examination" published in the Federal Register on June 26, 2006 (71 Fed. Reg. 36323), the following conditions must be satisfied:

1. The application must be a non-reissue utility or design application filed under 37 CFR 1.111(a);
2. The application, the petition and the required fees must be filed electronically using the USPTO's electronic filing system (EFS), or EFS-web; if not filed electronically, a statement asserting that EFS and EFS-web were not available during the normal business hours;
3. The application, at the time of filing, must be complete under 37 CFR 1.51 and in condition for examination;
4. The application must contain three or fewer independent claims and twenty or fewer total claims and the claims must be directed to a single invention.
5. The petition must be filed with the application.

The application as filed is not eligible for the accelerated examination under 37 C.F.R. § 1.102(d) because the petition was not filed with the application. As noted in the policy statement referenced above, any petition to make special filed on or after the effective date must meet the new requirements set forth in the 71 Fed. Reg. 36323 notice. Applications filed before

the effective date will not be eligible for the revised accelerated examination program. The effective date of the change in practice was August 25, 2006. Thus the instant petition must be reviewed under the revised practice and the instant application is ineligible.

The petition appears on its face to have been filed without recognition of the August 25, 2006 policy change to the petition to make special program. The changes to the program are substantial. The Notice of Federal Register on June 26, 2006 (71 Fed. Reg. 36323) can be accessed on the internet at
http://www.uspto.gov/web/offices/com/sol/notices/71fr36323.pdf

Further guidance may be found website of the USPTO at
http://www.uspto.gov/web/patents/accelerated

under the accelerated examination link.

For the above-stated reasons, the petition is **DENIED**. The application will therefore be taken up by the examiner for action in its regular turn.

Any inquiry regarding this decision should be directed to Linda Sholl, TC 3700 Special Program Examiner, at (571) 272-4391.

/Linda Sholl/
Linda Sholl
Special Program Examiner
Technology Center 3700

Doc Code: PET.AUTO **Document Description: Petition automatically granted by EFS-Web**	PTO/SB/83 U.S. Patent and Trademark Office Department of Commerce

Electronic Petition Request	**REQUEST FOR WITHDRAWAL AS ATTORNEY OR AGENT AND CHANGE OF CORRESPONDENCE ADDRESS**
Application Number	12604696
Filing Date	23-Oct-2009
First Named Inventor	Norman Van Meeteren
Art Unit	1638
Examiner Name	LI ZHENG
Attorney Docket Number	1586-024
Title	Soybean Cultivar S080187

◉ Please withdraw me as attorney or agent for the above identified patent application and the practitioners of record associated with Customer Number: 32905

The reason(s) for this request are those described in 37 CFR:

10.40(b)(4)

Certifications

☒ I/We have given reasonable notice to the client, prior to the expiration of the response period, that the practitioner(s) intend to withdraw from employment

☒ I/We have delivered to the client or a duly authorized representative of the client all papers and property (including funds) to which the client is entitled

☒ I/We have notified the client of any responses that may be due and the time frame within which the client must respond

Change the correspondence address and direct all future correspondence to:
The address of the first named inventor or assignee that has properly made itself of record pursuant to 37 CFR 3.71, associated with Customer Number: 26263

I am authorized to sign on behalf of myself and all withdrawing practitioners.

Signature	/Robert J. Jondle/
Name	Robert J. Jondle
Registration Number	33915

UNITED STATES PATENT AND TRADEMARK OFFICE

Commissioner for Patents
United States Patent and Trademark Office
P.O. Box 1450
Alexandria, VA 22313-1450
www.uspto.gov

Decision Date : January 6, 2012

In re Application of :

Norman Van Meeteren

Application No : 12604696

Filed : 23-Oct-2009

Attorney Docket No : 1586-024

DECISION ON REQUEST TO WITHDRAW AS ATTORNEY/AGENTOF RECORD

This is an electronic decision on the Request to Withdraw as attorney or agent of record under 37 CFR§ 1.36(b), filed January 6, 2012

The request is **APPROVED**

The request was signed by Robert J. Jondle (registration no. 33915) on behalf of all attorneys/agents associated with Customer Number 32905 . All attorneys/agents associated with Customer Number 32905 have been withdrawn.

Since there are no remaining attorneys of record, all future communications from the Office will be directed to the first named inventor or assignee that has properly made itself of record pursuant to 37 CFR 3.71, with Customer number 26263 .

As a reminder, requester is required to inform the first named inventor or assignee that has properly made itself of record pursuant to 37 CFR 3.71 of the electronically processed petition.

Telephone inquiries concerning this decision should be directed to the Patent Electronic Business Center (EBC) at 866-217-9197.

Office of Petitions

UNITED STATES PATENT AND TRADEMARK OFFICE

Commissioner for Patents
United States Patent and Trademark Office
P.O. Box 1450
Alexandria, VA 22313-1450
www.uspto.gov

Decision Date : January 11, 2012

In re Application of :

Norman Van Meeteren

Application No : 12604734

Filed : 23-Oct-2009

Attorney Docket No : 1586-041

DECISION ON REQUEST TO WITHDRAW AS ATTORNEY/AGENTOF RECORD

This is an electronic decision on the Request to Withdraw as attorney or agent of record under 37 CFR§ 1.36(b), filed January 11, 2012

The request is **APPROVED**

The request was signed by Robert J. Jondle (registration no. 33915) on behalf of all attorneys/agents associated with Customer Number 32905 . All attorneys/agents associated with Customer Number 32905 have been withdrawn.

Since there are no remaining attorneys of record, all future communications from the Office will be directed to the first named inventor or assignee that has properly made itself of record pursuant to 37 CFR 3.71, with Customer number 26263 .

As a reminder, requester is required to inform the first named inventor or assignee that has properly made itself of record pursuant to 37 CFR 3.71 of the electronically processed petition.

Telephone inquiries concerning this decision should be directed to the Patent Electronic Business Center (EBC) at 866-217-9197.

Office of Petitions

Doc Code: PET.AUTO **Document Description: Petition automatically granted by EFS-Web**	PTO/SB/83 U.S. Patent and Trademark Office Department of Commerce

Electronic Petition Request	**REQUEST FOR WITHDRAWAL AS ATTORNEY OR AGENT AND CHANGE OF CORRESPONDENCE ADDRESS**
Application Number	12604734
Filing Date	23-Oct-2009
First Named Inventor	Norman Van Meeteren
Art Unit	1638
Examiner Name	LI ZHENG
Attorney Docket Number	1586-041
Title	Soybean Cultivar S080120

◉ Please withdraw me as attorney or agent for the above identified patent application and the practitioners of record associated with Customer Number: 32905

The reason(s) for this request are those described in 37 CFR:

10.40(b)(4)

Certifications

☒ I/We have given reasonable notice to the client, prior to the expiration of the response period, that the practitioner(s) intend to withdraw from employment

☒ I/We have delivered to the client or a duly authorized representative of the client all papers and property (including funds) to which the client is entitled

☒ I/We have notified the client of any responses that may be due and the time frame within which the client must respond

Change the correspondence address and direct all future correspondence to:
The address of the first named inventor or assignee that has properly made itself of record pursuant to 37 CFR 3.71, associated with Customer Number: 26263

I am authorized to sign on behalf of myself and all withdrawing practitioners.

Signature	/Robert J. Jondle/
Name	Robert J. Jondle
Registration Number	33915

UNITED STATES PATENT AND TRADEMARK OFFICE

Commissioner for Patents
United States Patent and Trademark Office
P.O. Box 1450
Alexandria, VA 22313-1450
www.uspto.gov

Decision Date : January 11, 2012

In re Application of :

Norman Van Meeteren

Application No : 12604768

Filed : 23-Oct-2009

Attorney Docket No : 1586-045

DECISION ON REQUEST TO WITHDRAW AS ATTORNEY/AGENTOF RECORD

This is an electronic decision on the Request to Withdraw as attorney or agent of record under 37 CFR§ 1.36(b), filed January 11, 2012

The request is **APPROVED**

The request was signed by Robert J. Jondle (registration no. 33915) on behalf of all attorneys/agents associated with Customer Number 32905 . All attorneys/agents associated with Customer Number 32905 have been withdrawn.

Since there are no remaining attorneys of record, all future communications from the Office will be directed to the first named inventor or assignee that has properly made itself of record pursuant to 37 CFR 3.71, with Customer number 26263 .

As a reminder, requester is required to inform the first named inventor or assignee that has properly made itself of record pursuant to 37 CFR 3.71 of the electronically processed petition.

Telephone inquiries concerning this decision should be directed to the Patent Electronic Business Center (EBC) at 866-217-9197.

Office of Petitions

Doc Code: PET.AUTO **Document Description: Petition automatically granted by EFS-Web**	PTO/SB/83 U.S. Patent and Trademark Office Department of Commerce

Electronic Petition Request	**REQUEST FOR WITHDRAWAL AS ATTORNEY OR AGENT AND CHANGE OF CORRESPONDENCE ADDRESS**
Application Number	12604768
Filing Date	23-Oct-2009
First Named Inventor	Norman Van Meeteren
Art Unit	1638
Examiner Name	LI ZHENG
Attorney Docket Number	1586-045
Title	Soybean Cultivar S080189

◉ Please withdraw me as attorney or agent for the above identified patent application and the practitioners of record associated with Customer Number: 32905

The reason(s) for this request are those described in 37 CFR:

10.40(b)(4)

Certifications

☒ I/We have given reasonable notice to the client, prior to the expiration of the response period, that the practitioner(s) intend to withdraw from employment

☒ I/We have delivered to the client or a duly authorized representative of the client all papers and property (including funds) to which the client is entitled

☒ I/We have notified the client of any responses that may be due and the time frame within which the client must respond

Change the correspondence address and direct all future correspondence to:
The address of the first named inventor or assignee that has properly made itself of record pursuant to 37 CFR 3.71, associated with Customer Number: 26263

I am authorized to sign on behalf of myself and all withdrawing practitioners.

Signature	/Robert J. Jondle/
Name	Robert J. Jondle
Registration Number	33915

UNITED STATES PATENT AND TRADEMARK OFFICE

Commissioner for Patents
United States Patent and Trademark Office
P.O. Box 1450
Alexandria, VA 22313-1450
www.uspto.gov

Dickstein Shapiro LLP
2049 Century Park East
Suite 700
Los Angeles CA 90067

MAILED

DEC 13 2011

OFFICE OF PETITIONS

In re Application of	:	
David R. Hennings et al.	:	
Application No. 12/604,815	:	DECISION ON PETITION
Filed: October 23, 2009	:	
Attorney Docket No. C7162.0006	:	

This is a decision on the petition under 37 CFR 1.59(b), filed October 5, 2011, to expunge information from the above identified application.

The petition is **dismissed**.

Petitioner requests that the amendment filed September 26, 2011(EFS ID No. 11048154), be expunged from the record.

The petition is deficient because there is no statement that:

> (B) the information submitted was unintentionally submitted and the failure to obtain its return would cause irreparable harm to the party who submitted the information or to the party in interest on whose behalf the information was submitted;
> (C) the information has not otherwise been made public;
> (D) there is a commitment on the part of the petitioner to retain such information for the period of any patent with regard to which such information is submitted.

Petitioner is directed to MPEP 724.05(II).

Telephone inquiries concerning this communication should be directed to Carl Friedman at (571) 272-6842.

Carl Friedman
Petitions Examiner
Office of Petitions

UNITED STATES PATENT AND TRADEMARK OFFICE

Commissioner for Patents
United States Patent and Trademark Office
P.O. Box 1450
Alexandria, VA 22313-1450
www.uspto.gov

Pepper/Millenniata
50th Floor
500 Grant Street
Pittsburgh PA 15219-2502

MAILED

APR 20 2011

OFFICE OF PETITIONS

In re Application of	:	
Christopher J. Buntel et al.	:	
Application No. 12/604,816	:	DECISION ON PETITION
Filed: October 23, 2009	:	TO WITHDRAW
Attorney Docket No. ML.008.NPUS00	:	FROM RECORD
	:	

This is a decision on the Request to Withdraw as attorney or agent of record under 37 C.F.R. § 1.36(b), filed March 10, 2011.

The request is **APPROVED**.

A grantable request to withdraw as attorney/agent of record must be signed by every attorney/agent seeking to withdraw or contain a clear indication that one attorney is signing on behalf of another/others. A request to withdraw will not be approved unless at least 30 (thirty) days would remain between the date of approval and the later of the expiration date of a time to file a response or the expiration date of the maximum time period which can be extended under 37 C.F.R. § 1.136(a).

The request was signed by Joseph T. Helmsen on behalf of attorneys/agents associated with customer number 89485. All attorneys/agents associated with customer number 89485 been withdrawn.

The correspondence address has been changed and is copied below.

Telephone inquiries concerning this decision should be directed to Kimberly Inabinet at 571-272-4618.

/Kimberly Inabinet/

Kimberly Inabinet
Petitions Examiner
Office of Petitions

cc: Brigham Young University
3760 HBLL, Technology Transfer Office
Provo, UT 84602-6844

UNITED STATES PATENT AND TRADEMARK OFFICE

UNITED STATES DEPARTMENT OF COMMERCE
United States Patent and Trademark Office
Address: COMMISSIONER FOR PATENTS
P.O. Box 1450
Alexandria, Virginia 22313-1450
www.uspto.gov

APPLICATION NUMBER	FILING OR 371(C) DATE	FIRST NAMED APPLICANT	ATTY. DOCKET NO./TITLE
12/604,816	10/23/2009	Christopher J. Buntel	ML.008.NPUS00

CONFIRMATION NO. 9366

POWER OF ATTORNEY NOTICE

89485
Pepper/Millenniata
50th Floor
500 Grant Street
Pttsburgh, PA 15219-2502

OC000000047224857

Date Mailed: 04/19/2011

NOTICE REGARDING CHANGE OF POWER OF ATTORNEY

This is in response to the Power of Attorney filed 03/10/2011.

- The withdrawal as attorney in this application has been accepted. Future correspondence will be mailed to the new address of record. 37 CFR 1.33.

/kainabinet/

Office of Data Management, Application Assistance Unit (571) 272-4000, or (571) 272-4200, or 1-888-786-0101

UNITED STATES PATENT AND TRADEMARK OFFICE

UNITED STATES DEPARTMENT OF COMMERCE
United States Patent and Trademark Office
Address: COMMISSIONER FOR PATENTS
P.O. Box 1450
Alexandria, Virginia 22313-1450
www.uspto.gov

APPLICATION NO.	FILING DATE	FIRST NAMED INVENTOR	ATTORNEY DOCKET NO.	CONFIRMATION NO.
12/604,824	10/23/2009	Marc Levesque	09680.0424FPD1	9389

23552 7590 12/10/2010
MERCHANT & GOULD PC
P.O. BOX 2903
MINNEAPOLIS, MN 55402-0903

EXAMINER
LE, JOHN H

ART UNIT	PAPER NUMBER
2857	

MAIL DATE	DELIVERY MODE
12/10/2010	PAPER

Please find below and/or attached an Office communication concerning this application or proceeding.

The time period for reply, if any, is set in the attached communication.

UNITED STATES PATENT AND TRADEMARK OFFICE

Commissioner for Patents
United States Patent and Trademark Office
P.O. Box 1450
Alexandria, VA 22313-1450
www.uspto.gov

MERCHANT & GOULD PC
P.O. BOX 2903
MINNEAPOLIS, MN 55402-0903

In re Application of Marc Levesque et al.
Application No.: 12/604,824
Filed: October 23, 2009
Attorney Docket No.: 09680.0424FPD1
For: DIGITAL SIGNAL PROCESSING IN OPTICAL SYSTEMS USED FOR RANGING APPLICATIONS

DECISION ON PETITION UNDER 37 C.F.R. §1.59

This is a decision on the petition under 37 C.F.R. §1.59(b), filed October 22, 2010, to expunge information inadvertently submitted electronically on September 16, 2009, from the above-identified application.

The petition is DENIED.

Petitioner requests that the Amendment filed October 21, 2010, be expunged from the record because the Amendment was inadvertently filed and is substantially the same as a previously filed amendment.

Pursuant to M.P.E.P. § 724.05,

> "II. INFORMATION UNINTENTIONALLY SUBMITTED IN APPLICATION
> A petition to expunge information unintentionally submitted in an application (other than information forming part of the original disclosure) may be filed under 37 CFR 1.59(b), provided that:
> (A) the Office can effect such return prior to the issuance of any patent on the application in issue;
> (B) it is stated that the information submitted was unintentionally submitted and the failure to obtain its return would cause irreparable harm to the party who submitted the information or to the party in interest on whose behalf the information was submitted;
> (C) the information has not otherwise been made public;
> (D) there is a commitment on the part of the petitioner to retain such information for the period of any patent with regard to which such information is submitted;

(E) it is established to the satisfaction of the Director that the information to be returned is not material information under 37 CFR 1.56; and
(F) the petition fee as set forth in 37 CFR 1.17(g) is included.
A request to expunge information that has not been clearly identified as information that may be later subject to such a request by marking and placement in a separate sealed envelope or container shall be treated on a case-by-case basis. Applicants should note that unidentified information that is a trade secret, proprietary, or subject to a protective order that is submitted in an Information Disclosure Statement may inadvertently be placed in an Office prior art search file by the examiner due to the lack of such identification and may not be retrievable. If a petition to expunge is not filed prior to the mailing of the notice of allowability, the materials submitted under MPEP § 724.02 will be released to the public upon the issuance of the application as a patent and upon the filing of a request and the appropriate fee (37 CFR 1.14)."

The petition does not satisfy conditions (B), (C) and (D) above for a grantable petition to expunge information unintentionally or inadvertently submitted on September 16, 2009.

It is noted that the Amendment is an amendment after allowance under 37 C.F.R. §1.312. The amendment does not comply with 37 C.F.R. §1.121 and does not make any change to any of the allowed claims. Accordingly, entry of the Amendment should properly be denied by the examiner.

Any inquiry regarding this decision should be directed to Hien H. Phan, Quality Assurance Specialist, at (571) 272-1606.

for John W. Cabeca, TC Director
Technology Center 2800
Semiconductors, Electrical and Optical
Systems and Components

UNITED STATES PATENT AND TRADEMARK OFFICE

Commissioner for Patents
United States Patent and Trademark Office
P.O. Box 1450
Alexandria, VA 22313-1450
www.uspto.gov

CONOCOPHILLIPS COMPANY – IP SERVICES GROUP
ATTENTION: DOCKETING
600 N. DAIRY ASHFORD
BLDG. MA-1135
HOUSTON, TX 77079

MAILED
SEP 28 2010
OFFICE OF PETITIONS

In re Application of	:	
Peter M Eick, et al.	:	
Application No. 12/604,841	:	DECISION ON PETITION
Filed: October 23, 2009	:	
Attorney Docket No. 34322US	:	

This is a decision on the petition under the unintentional provisions of 37 CFR 1.137(b), filed August 12, 2010, to revive the above-identified application.

The application became abandoned for failure to reply in a timely manner to the Notice to File Corrected Application Papers (Notice), mailed November 13, 2009. The Notice set a period for reply of two (2) months from the mail date of the Notice. No extensions of time under the provisions of 37 CFR 1.136(a) were obtained. Accordingly, the application became abandoned on January 14, 2010.

The petition satisfies the requirements of 37 CFR 1.137(b) in that petitioner has supplied (1) the reply in the form of an amendment with drawings, (2) the petition fee of $1620, and (3) a proper statement of unintentional delay.

In view of the above, the petition is **GRANTED**.

Telephone inquiries concerning this decision should be directed to undersigned at (571) 272-1642. All other inquiries concerning the examination or status of this application should be directed to the Office of Patent Application Processing at their hotline 571-272-4000.

This application is being referred to the Office of Patent Application Processing for appropriate action by the Examiner in the normal course of business on the reply received August 12, 2010.

April M. Wise
Petitions Examiner
Office of Petitions

UNITED STATES PATENT AND TRADEMARK OFFICE

UNITED STATES DEPARTMENT OF COMMERCE
United States Patent and Trademark Office
Address: COMMISSIONER FOR PATENTS
P.O. Box 1450
Alexandria, Virginia 22313-1450
www.uspto.gov

APPLICATION NO.	FILING DATE	FIRST NAMED INVENTOR	ATTORNEY DOCKET NO.	CONFIRMATION NO.
12/604,856	10/23/2009	Norman Van Meeteren	1586-044	9439

32905 7590 07/01/2011
JONDLE & ASSOCIATES, P.C.
858 HAPPY CANYON ROAD, SUITE 230
CASTLE ROCK, CO 80108

EXAMINER
MCELWAIN, ELIZABETH F

ART UNIT	PAPER NUMBER
1638	

NOTIFICATION DATE	DELIVERY MODE
07/01/2011	ELECTRONIC

Please find below and/or attached an Office communication concerning this application or proceeding.

The time period for reply, if any, is set in the attached communication.

Notice of the Office communication was sent electronically on above-indicated "Notification Date" to the following e-mail address(es):

JondleOA@jondlelaw.com

UNITED STATES PATENT AND TRADEMARK OFFICE

Commissioner for Patents
United States Patent and Trademark Office
P.O. Box 1450
Alexandria, VA 22313-1450
www.uspto.gov

JUL - 1 2011

JONDLE & ASSOCIATES P.C.
858 HAPPY CANYON ROAD SUITE 230
CASTLE ROCK CO 80108

In re Application of:	:
Norman Van Meeteren	:
Serial No.: 12/604,856	: PETITION DECISION
Filed: October 23, 2009	:
Attorney Docket No.: **1586-044**	

This is in response to the petition under 37 CFR § 1.59(b), filed June 9, 2011, to expunge information from the above identified application. This application has not been allowed.

Petitioner requests that the Reply to Request for Information under 37 CFR 1.105, and attachment thereto, submitted to the Patent Office on June 9, 2011, be expunged from the record. Petitioner states either: (A) that the information contains trade secret material, proprietary material and/or material that is subject to a protective order which has not been made public; or (B) that the information submitted was unintentionally submitted and the failure to obtain its return would cause irreparable harm to the party who submitted the information or to the party in interest on whose behalf the information was submitted, and the information has not otherwise been made public. The petition fee set forth in 37 CFR § 1.17(g) has been paid.

This is an examined application which is currently under non-final rejection. As such the information provided has been reviewed, in part, but proceedings in the application have not been terminated. As stated in M.P.E.P. 724, upon allowance or other action closing prosecution in an application, petition may be made for return of Proprietary information. The information cannot be expunged at this time.

The petition is **DISMISSED**. Petitioner may resubmit the petition subsequent to a Notice of Allowability or *ex parte Quayle* action being mailed in the application. No additional petition fee will be required at that time.

Should there be any questions about this decision please contact Marianne C. Seidel by letter addressed to Director, TC 1600, at the address listed above, or by telephone at 571-272-0584 or by facsimile sent to the general Office facsimile number, 571-273-8300.

/MC Seidel/
Marianne C. Seidel, Quality Assurance Specialist
Technology Center 1600

UNITED STATES PATENT AND TRADEMARK OFFICE

UNITED STATES DEPARTMENT OF COMMERCE
United States Patent and Trademark Office
Address: COMMISSIONER FOR PATENTS
P.O. Box 1450
Alexandria, Virginia 22313-1450
www.uspto.gov

APPLICATION NO.	FILING DATE	FIRST NAMED INVENTOR	ATTORNEY DOCKET NO.	CONFIRMATION NO.
12/604,856	10/23/2009	Norman Van Meeteren	1586-044	9439

32905 7590 11/08/2011
JONDLE & ASSOCIATES, P.C.
858 HAPPY CANYON ROAD, SUITE 230
CASTLE ROCK, CO 80108

EXAMINER
MCELWAIN, ELIZABETH F

ART UNIT	PAPER NUMBER
1638	

NOTIFICATION DATE	DELIVERY MODE
11/08/2011	ELECTRONIC

Please find below and/or attached an Office communication concerning this application or proceeding.

The time period for reply, if any, is set in the attached communication.

Notice of the Office communication was sent electronically on above-indicated "Notification Date" to the following e-mail address(es):

JondleOA@jondlelaw.com

UNITED STATES PATENT AND TRADEMARK OFFICE

Commissioner for Patents
United States Patent and Trademark Office
P.O. Box 1450
Alexandria, VA 22313-1450
www.uspto.gov

JONDLE & ASSOCIATES P.C.
858 HAPPY CANYON ROAD SUITE 230
CASTLE ROCK CO 80108

In re Application of:	
Norman Van Meeteren	PETITION DECISION
Serial No.: 12/604,856	
Filed: October 23, 2009	
Attorney Docket No.: **1586-044**	

This is in response to the renewed petition under 37 CFR § 1.59(b), filed November 4, 2011, to expunge information from the above identified application. This application has been allowed.

Petitioner requests that the material submitted to the Patent Office on June 9, 2011 be expunged from the record. Petitioner states either: (A) that the information contains trade secret material, proprietary material and/or material that is subject to a protective order which has not been made public; or (B) that the information submitted was unintentionally submitted and the failure to obtain its return would cause irreparable harm to the party who submitted the information or to the party in interest on whose behalf the information was submitted, and the information has not otherwise been made public. The petition fee set forth in 37 CFR § 1.17(g) has been paid.

The reasons set forth in this petition establishes to the satisfaction of the Director that expungement of the information is appropriate. The file entry for this document has been closed and as such the document is no longer publicly available, which is the IFW equivalent to removal of a paper document from a paper file wrapper.

Therefore, petitioner's petition is GRANTED.

Should there be any questions about this decision please contact Marianne C. Seidel by letter addressed to Director, TC 1600, at the address listed above, or by telephone at 571-272-0584 or by facsimile sent to the general Office facsimile number, 571-273-8300.

/MC Seidel/
Marianne C. Seidel, Quality Assurance Specialist
Technology Center 1600

UNITED STATES PATENT AND TRADEMARK OFFICE

UNITED STATES DEPARTMENT OF COMMERCE
United States Patent and Trademark Office
Address: COMMISSIONER FOR PATENTS
P.O. Box 1450
Alexandria, Virginia 22313-1450
www.uspto.gov

APPLICATION NO.	FILING DATE	FIRST NAMED INVENTOR	ATTORNEY DOCKET NO.	CONFIRMATION NO.
12/604,875	10/23/2009	Norman Van Meeteren	1586-043	9481

32905 7590 08/09/2011
JONDLE & ASSOCIATES, P.C.
858 HAPPY CANYON ROAD, SUITE 230
CASTLE ROCK, CO 80108

EXAMINER
MCELWAIN, ELIZABETH F

ART UNIT	PAPER NUMBER
1638	

NOTIFICATION DATE	DELIVERY MODE
08/09/2011	ELECTRONIC

Please find below and/or attached an Office communication concerning this application or proceeding.

The time period for reply, if any, is set in the attached communication.

Notice of the Office communication was sent electronically on above-indicated "Notification Date" to the following e-mail address(es):

JondleOA@jondlelaw.com

UNITED STATES PATENT AND TRADEMARK OFFICE

AUG 0 9 2011

Commissioner for Patents
United States Patent and Trademark Office
P.O. Box 1450
Alexandria, VA 22313-1450
www.uspto.gov

JONDLE & ASSOCIATES P.C.
858 HAPPY CANYON ROAD SUITE 230
CASTLE ROCK CO 80108

In re Application of:	:
Norman Van Meeteren	:
Serial No.: 12/604,875	: PETITION DECISION
Filed: October 23, 2009	:
Attorney Docket No.: **1586-043**	

This is in response to the petition under 37 CFR § 1.59(b), filed June 9, 2011, to expunge information from the above identified application. This application has not been allowed.

Petitioner requests that the Reply to Request for Information under 37 CFR 1.105, and attachment thereto, submitted to the Patent Office on June 9, 2011, be expunged from the record. Petitioner states either: (A) that the information contains trade secret material, proprietary material and/or material that is subject to a protective order which has not been made public; or (B) that the information submitted was unintentionally submitted and the failure to obtain its return would cause irreparable harm to the party who submitted the information or to the party in interest on whose behalf the information was submitted, and the information has not otherwise been made public. The petition fee set forth in 37 CFR § 1.17(g) has been paid.

This is an examined application which is currently under non-final rejection. As such the information provided has been reviewed, in part, but proceedings in the application have not been terminated. As stated in M.P.E.P. 724, upon allowance or other action closing prosecution in an application, petition may be made for return of Proprietary information. The information cannot be expunged at this time.

The petition is **DISMISSED**. Petitioner may resubmit the petition subsequent to a Notice of Allowability or *ex parte Quayle* action being mailed in the application. No additional petition fee will be required at that time.

Should there be any questions about this decision please contact Marianne C. Seidel by letter addressed to Director, TC 1600, at the address listed above, or by telephone at 571-272-0584 or by facsimile sent to the general Office facsimile number, 571-273-8300.

/MC Seidel/
Marianne C. Seidel, Quality Assurance Specialist
Technology Center 1600

UNITED STATES PATENT AND TRADEMARK OFFICE

UNITED STATES DEPARTMENT OF COMMERCE
United States Patent and Trademark Office
Address: COMMISSIONER FOR PATENTS
P.O. Box 1450
Alexandria, Virginia 22313-1450
www.uspto.gov

APPLICATION NO.	FILING DATE	FIRST NAMED INVENTOR	ATTORNEY DOCKET NO.	CONFIRMATION NO.
12/604,875	10/23/2009	Norman Van Meeteren	1586-043	9481

32905 7590 11/10/2011
JONDLE & ASSOCIATES, P.C.
858 HAPPY CANYON ROAD, SUITE 230
CASTLE ROCK, CO 80108

EXAMINER
MCELWAIN, ELIZABETH F

ART UNIT	PAPER NUMBER
1638	

NOTIFICATION DATE	DELIVERY MODE
11/10/2011	ELECTRONIC

Please find below and/or attached an Office communication concerning this application or proceeding.

The time period for reply, if any, is set in the attached communication.

Notice of the Office communication was sent electronically on above-indicated "Notification Date" to the following e-mail address(es):

JondleOA@jondlelaw.com

UNITED STATES PATENT AND TRADEMARK OFFICE

NOV 1 0 2011

Commissioner for Patents
United States Patent and Trademark Office
P.O. Box 1450
Alexandria, VA 22313-1450
www.uspto.gov

JONDLE & ASSOCIATES P.C.
858 HAPPY CANYON ROAD SUITE 230
CASTLE ROCK CO 80108

In re Application of:	:
Norman Van meeteren	: PETITION DECISION
Serial No.: 12/604,875	:
Filed: October 15, 2009	:
Attorney Docket No.: **1586-043**	

This is in response to the renewed petition under 37 CFR § 1.59(b), filed October 28, 2011, to expunge information from the above identified application. This application has been allowed.

Petitioner requests that the material submitted to the Patent Office on June 9, 2011 be expunged from the record. Petitioner states either: (A) that the information contains trade secret material, proprietary material and/or material that is subject to a protective order which has not been made public; or (B) that the information submitted was unintentionally submitted and the failure to obtain its return would cause irreparable harm to the party who submitted the information or to the party in interest on whose behalf the information was submitted, and the information has not otherwise been made public. The petition fee set forth in 37 CFR § 1.17(g) has been paid.

The reasons set forth in this petition establishes to the satisfaction of the Director that expungement of the information is appropriate. The file entry for this document has been closed and as such the document is no longer publicly available, which is the IFW equivalent to removal of a paper document from a paper file wrapper.

Therefore, petitioner's petition is GRANTED.

Should there be any questions about this decision please contact Marianne C. Seidel by letter addressed to Director, TC 1600, at the address listed above, or by telephone at 571-272-0584 or by facsimile sent to the general Office facsimile number, 571-273-8300.

/MC Seidel/
Marianne C. Seidel, Quality Assurance Specialist
Technology Center 1600

UNITED STATES PATENT AND TRADEMARK OFFICE

Commissioner for Patents
United States Patent and Trademark Office
P.O. Box 1450
Alexandria, VA 22313-1450
www.uspto.gov

MAILED

OCT 15 2010

OFFICE OF PETITIONS

Orbital Research Inc.
4415 Euclid Avenue
Suite 500
Cleveland OH 44103

In re Application of	:
Patel et al.	: DECISION
Application No.: 12/604,903	:
Filed: October 23, 2009	:
Docket No.: ORB-073	:

This decision is in response to the "PETITION UNDER 37 CFR §1.183 TO APPOINT AN ATTORNEY AND TO PERMIT JOINT PROSECUTION", filed April 8, 2010.

The petition under 37 CFR 1.183 to waive the requirements of 37 CFR 1.36(a) is hereby **GRANTED** to the extent indicated.

A grantable petition under 37 CFR 1.183 to waive the requirements of 37 CFR 1.36(a) requires that petitioners establish that this is an extraordinary situation where justice requires waiver of the rules.

Moreover, in accordance with MPEP 402.10, "[p]apers revoking a power of attorney in an application (or giving a power of attorney) will not be accepted by the Office when signed by less than all of the applicants or owners of the application unless they are accompanied by a petition under 37 CFR 1.36(a) and fee under 37 CFR 1.17(f) with a showing of sufficient cause (if revocation), or a petition under 37 CFR 1.183 and fee under 37 CFR 1.17(f) (if appointment) demonstrating the extraordinary situation where justice requires waiver of the requirement of 37 CFR 1.32(b)(4) that the applicant, or the assignee of the entire interest of the applicant sign the power of attorney." Further, the acceptance of such papers by petition under 37 CFR 1.36(a) or 1.183 will result in more than one attorney, agent, applicant, or owner prosecuting the application at the same time. Therefore, each of these parties must sign all subsequent replies submitted to the Office. *See, In re Goldstein*, 16 USPQ2d 1963 (Dep. Assist. Comm'r Pat. 1988).

Petitioner argues that the inventors Patel and Corke authorized power of attorney to attorney Kolkowski via the declaration

filed on October 23, 2009. Inventor Patel purportedly has assigned his interest to Orbital Research, Inc. Inventor Corke assigned his interest in the above-identified application to the University of Notre Dame Du Lac. The assignment was recorded in parent application no. 11/415,535 on May 2, 2006. The University of Notre Dame Du Lac seeks to revoke the power of attorney previously given to attorney Kolkowki and appoint attorney Keith R. Jarosik. Thus, petitioner requests that Orbital Research, Inc. and the University of Notre Dame Du Lac prosecute the application jointly.

The petition is granted in that a representative from Orbital Research, Inc and a representative from the University of Notre Dame Du Lac **must** execute all subsequent replies submitted to the Office.

However, the correspondence address of record will remain with Orbital Research, Inc.

The application is being directed to art unit 3643 for further processing in the normal course of business.

Telephone inquiries regarding this decision should be directed to the undersigned at (571) 272-3215.

Charlema Grant
Petitions Attorney
Office of Petitions

Cc: Keith Jarosik
Ladas & Parry, LLP
224 South Michigan Ave.
Suite 1600
Chicago, Illinois 60604

UNITED STATES PATENT AND TRADEMARK OFFICE

Commissioner for Patents
United States Patent and Trademark Office
P.O. Box 1450
Alexandria, VA 22313-1450
www.uspto.gov

Foley & Lardner LLP
111 HUNTINGTON AVENUE
26TH FLOOR
BOSTON MA 02199-7610

MAILED

SEP 22 2010

OFFICE OF PETITIONS

In re Application of :
Ying et al. :
Application No. 12/604,970 : ON PETITION
Deposited: October 23, 2009 :
Attorney Docket No. 096171-0838 :

This is in response to the "PETITION UNDER 37 CFR §1.57(a)" filed May 12, 2010, requesting that the above-referenced application be accorded a filing date of October 23, 2009. This petition is being treated pursuant to 37 CFR 1.53(e)(2)[1].

Application papers in the above-identified application were deposited on October 23, 2009. However, on March 12, 2010, the Office of Patent Application Processing mailed applicants a "Notice of Incomplete Nonprovisional Application," notifying applicants that the application papers had not been accorded a filing date because the application was deposited without drawings. In response, applicants timely filed this petition. Applicants request that the application be amended to include the inadvertently omitted drawings on the basis that the application as filed contained a prior benefit claim under 37 CFR 1.55 or 1.78.

Petitioner's arguments and evidence have been considered. However, a review of the application confirms that, as filed, the application contained at least one method claim. MPEP 601.01(f) provides that:

> It has been USPTO practice to treat an application that contains at least one process or method claim as an application for which a drawing is not necessary for an understanding of the invention under 35 U.S.C. 113 (first sentence).

Thus, pursuant to § 601.01(f), a drawing is not considered essential for a filing date. The instant application is entitled to a filing date without drawings present in the application.

Accordingly, the Office should have granted the application a filing date and mailed a Notice of Omitted Items instead of a Notice of Incomplete Nonprovisional Application. As stated in MPEP 601.01(g) under the section entitled, "Application Entitled to a Filing Date," applicant may submit an amendment to include the inadvertently omitted portion of the drawing(s) pursuant to 37 CFR 1.57(a):

[1] Any request for review of a notification pursuant to paragraph (e)(1) of this section, or a notification that the original application papers lack a portion of the specification or drawing(s), must be by way of a petition pursuant to this paragraph accompanied by the fee set forth in § 1.17(f). In the absence of a timely (§ 1.181(f)) petition pursuant to this paragraph, the filing date of an application in which the applicant was notified of a filing error pursuant to paragraph (e)(1) of this section will be the date the filing error is corrected.

> [i]f an application was filed on or after September 21, 2004, and contains a claim under 37 CFR 1.55 for priority of a prior-filed foreign application, or a claim under 37 CFR 1.78 for the benefit of a prior-filed provisional, nonprovisional, or international application that was present on the filing date of the application, and the omitted portion of the drawing(s) was inadvertently omitted from the application and is completely contained in the prior-filed application[.]

Please note that no petition is required and that the amendment must comply with 37 CFR 1.57(a) and 37 CFR 1.121. See MPEP § 201.17. Any amendment to include the inadvertently omitted drawing(s) will be considered by the examiner.

It should be noted that a review of the drawings submitted shows that the drawings are not compliant with 37 CFR 1.121(d). When the Office receives replacement sheets of drawings for patent applications after the application has been filed, a cover letter identifying the drawings by application number should accompany them. The application number and other identifying indicia should be placed on each sheet of drawings in accordance with 37 CFR 1.84(c). Each drawing sheet submitted after the filing date of the application must be identified as either "Replacement Sheet" or "New Sheet" pursuant to 37 CFR 1.121(d).

To the extent the instant petition requests a filing date of October 23, 2009 with no drawings present in the application, the petition is **GRANTED**.

Given the basis for granting this petition, the petition fee is being refunded.

Pursuant to this decision, the application will be referred to Office of Patent Application Processing for:

- **correction of the filing date to October 23, 2009**;
- **for indication in Office records, as appropriate, that "0" sheets of drawings were present on filing** and
- **for issuance of a filing receipt.**

Telephone inquiries concerning this matter may be directed to Charlema Grant at (571) 272-3215.

Christopher Bottorff
Supervisor
Office of Petitions

UNITED STATES PATENT AND TRADEMARK OFFICE

UNITED STATES DEPARTMENT OF COMMERCE
United States Patent and Trademark Office
Address: COMMISSIONER FOR PATENTS
P.O. Box 1450
Alexandria, Virginia 22313-1450
www.uspto.gov

APPLICATION NO.	FILING DATE	FIRST NAMED INVENTOR	ATTORNEY DOCKET NO.	CONFIRMATION NO.
12/605,037	10/23/2009	Takeshi Kumagaya	8073P812	9820

EXAMINER
FUREMAN, JARED

ART UNIT	PAPER NUMBER
2836	

MAIL DATE	DELIVERY MODE
04/04/2011	PAPER

7590 04/04/2011
BLAKELY SOKOLOFF TAYLOR & ZAFMAN LLP
1279 OAKMEAD PARKWAY
SUNNYVALE, CA 94085-4040

DECISION GRANTING PETITION UNDER 37 CFR 1.138(d)

The declaration of express abandonment is recognized

This is in response to the petition under 37 CFR 1.138(d), requesting for a refund of any previously paid search fee and excess claims fee in the above-identified application.

The petition is granted.

The express abandonment is recognized. Any previously paid search fee and excess claims fee are hereby refunded.

Telephone inquiries should be directed to the Office of Data Management at (571) 272-4200.

Patent Publication Branch
Office of Data Management

FORM PET651G (Rev. 08/07)

UNITED STATES PATENT AND TRADEMARK OFFICE

Commissioner for Patents
United States Patent and Trademark Office
P.O. Box 1450
Alexandria, VA 22313-1450
www.uspto.gov

JOSEPH R. ENGLANDER
200 E BROWARD BOULEVARD
2100
FORT LAUDERDALE FL 33301

MAILED
MAY 16 2011
OFFICE OF PETITIONS

In re Application of	:	
NAGY, et al	:	
Application No. 12/605,057	:	DECISION ON PETITION
Filed: October 23, 2009	:	TO WITHDRAW
Attorney Docket No. 26144.0004-014	:	FROM RECORD
	:	

This is a decision on the Request to Withdraw as attorney or agent of record under 37 C.F.R. § 1.36(b), filed March 24, 2011.

The request is **NOT APPROVED.**

The request to withdraw from record cannot be approved because the request to change the correspondence address is not acceptable. The Office will either change the correspondence address of record to the most current address information provided for the assignee of the entire interest who properly became of record under 37 CFR 3.71 or, if no assignee of the entire interest has properly been made of record under 37 CFR 3.71, the most current address information provided for the first named inventor. If the change of correspondence address is that of an assignee, there is no statement under 37 CFR 3.73(b) pursuant to 37 CFR 3.71. Please see the attached Form PTO/SB/96 –Statement Under 37 CFR 3.73(b).

All future communications from the Office will continue to be directed to the above-identified address until otherwise properly notified.

Telephone inquiries concerning this decision should be directed to the undersigned at (571) 272-6735.

/Diane C. Goodwyn/
Diane C. Goodwyn
Petitions Examiner
Office of Petitions

cc: ACCELERATED CONCEPTS, LLC
4017 W. DR. MARTIN LUTHER KING, JR. BLVD.
TAMPA FL 33614

Attachment: PTO/SB96 - Statement Under 37 CFR 3.73(b)

UNITED STATES PATENT AND TRADEMARK OFFICE

Commissioner for Patents
United States Patent and Trademark Office
P.O. Box 1450
Alexandria, VA 22313-1450
www.uspto.gov

SHUTTS & BOWEN LLP
200 E BROWARD BOULEVARD
2100
FORT LAUDERDALE FL 33301

MAILED
JUN 23 2011
OFFICE OF PETITIONS

In re Application of	:	
NAGY, et al	:	
Application No. 12/605,057	:	DECISION ON PETITION
Filed: October 23, 2009	:	TO WITHDRAW
Attorney Docket No. 26144.0004-014	:	FROM RECORD
	:	

This is a decision on the Request to Withdraw as attorney or agent of record under 37 C.F.R. § 1.36(b), filed May 27, 2011.

The request is **APPROVED.**

A grantable request to withdraw as attorney/agent of record must be signed by every attorney/agent seeking to withdraw or contain a clear indication that one attorney is signing on behalf of another/others. The Office requires the practitioner(s) requesting withdrawal to certify that he, she, or they have: (1) given reasonable notice to the client, prior to the expiration of the response period, that the practitioner(s) intends to withdraw from employment; (2) delivered to the client or a duly authorized representative of the client all papers and property (including funds) to which the client is entitled; and (3) notified the client of any responses that may be due and the time frame within which the client must respond, pursuant 37 CFR 10.40(c).

The request was signed by Joseph R. Englander on behalf of the attorneys of record associated with Customer No. 65039.

The attorneys of record associated with Customer No. 65039 have been withdrawn.

Applicant is reminded that there is no attorney of record at this time.

The correspondence address of record has been changed and the new correspondence address is the address indicated below until otherwise properly notified.

Telephone inquiries concerning this decision should be directed to the undersigned at (571) 272- 6735.

/Diane C. Goodwyn/
Diane C. Goodwyn
Petitions Examiner
Office of Petitions

cc: ACCELERATED CONCEPTS, LLC
4017 W. DR. MARTIN LUTHER KING, JR. BLVD.
TAMPA FL 33614

UNITED STATES PATENT AND TRADEMARK OFFICE

UNITED STATES DEPARTMENT OF COMMERCE
United States Patent and Trademark Office
Address: COMMISSIONER FOR PATENTS
P.O. Box 1450
Alexandria, Virginia 22313-1450
www.uspto.gov

APPLICATION NUMBER	FILING OR 371(C) DATE	FIRST NAMED APPLICANT	ATTY. DOCKET NO./TITLE
12/605,057	10/23/2009	Michael E. Nagy	26144.0004-014

CONFIRMATION NO. 9852

POWER OF ATTORNEY NOTICE

OC000000048350197

65039
Shutts & Bowen LLP
200 E Broward Boulevard
2100
Fort Lauderdale, FL 33301

Date Mailed: 06/22/2011

NOTICE REGARDING CHANGE OF POWER OF ATTORNEY

This is in response to the Power of Attorney filed 05/27/2011.

- The withdrawal as attorney in this application has been accepted. Future correspondence will be mailed to the new address of record. 37 CFR 1.33.

/dcgoodwyn/

Office of Data Management, Application Assistance Unit (571) 272-4000, or (571) 272-4200, or 1-888-786-0101

Doc Code: PET.GREEN
Document Description: Petition for Green Tech Pilot

PTO/SB/420 (05-10)
Approved for use through 01/31/2011. OMB 0651-0062
U.S. Patent and Trademark Office; U. S. DEPARTMENT OF COMMERCE
Under the Paperwork Reduction Act of 1995, no persons are required to respond to a collection of information unless it displays a valid OMB control number.

PETITION TO MAKE SPECIAL UNDER THE GREEN TECHNOLOGY PILOT PROGRAM

Attorney Docket Number: 0004P/4933P	Application Number (if known): 12/605,108	Filing date: 10/23/2009

First Named Inventor: Isik C. KIZILYALLI

Title: PHOTOVOLTAIC DEVICE

APPLICANT HEREBY REQUESTS TO PARTICIPATE IN THE GREEN TECHNOLOGY PILOT PROGRAM FOR THE ABOVE-IDENTIFIED APPLICATION. See Instruction Sheet on page 2.

This petition must be timely filed electronically using the USPTO electronic filing system, EFS-Web.

1. By filing this petition:

   Applicant is requesting early publication: Applicant hereby requests early publication under 37 CFR 1.219 and the publication fee set forth in 37 CFR 1.18(d) accompanies this request.

2. By filing this petition: applicant is agreeing to make an election without traverse in a telephonic interview and elect an invention that meets the eligibility requirements set forth in the notice titled "Pilot Program for Green Technologies Including Greenhouse Gas Reduction," as modified by the notice titled "Elimination of Classification Requirement in the Green Technology Pilot Program," each of which was published in the Federal Register, if the Office determines that the claims are not obviously directed to a single invention.

3. This request is accompanied by statements of special status for the eligibility requirement.

4. The application contains no more than three (3) independent claims and twenty (20) total claims.

5. The application does not contain any multiple dependent claims.

6. Other attachments: Preliminary Amendment

Signature /Joseph A. Sawyer, Jr./	Date September 24, 2010
Name (Print/Typed) Joseph A. Sawyer, Jr.	Registration Number 30801

***Note**: Signatures of all the inventors or assignees of record of the entire interest or their representative(s) are required in accordance with 37 CFR 1.33 and 11.18. Please see 37 CFR 1.4(d) for the form of the signature. If necessary, submit multiple forms for more than one signature, see below*.*

☑ *Total of 1 forms are submitted.

The information is required to obtain or retain a benefit by the public which is to file (and by the USPTO to process) an application. Confidentiality is governed by 35 U.S.C. 122 and 37 CFR 1.11 and 1.14. This collection is estimated to take 1 hour to complete, including gathering, preparing, and submitting the completed application form to the USPTO. Time will vary depending upon the individual case. Any comments on the amount of time you require to complete this form and/or suggestions for reducing this burden, should be sent to the Chief Information Officer, U.S. Patent and Trademark Office, U.S. Department of Commerce, P.O. Box 1450, Alexandria, VA 22313-1450. DO NOT SEND FEES OR COMPLETED FORMS TO THIS ADDRESS. **SEND TO: Commissioner for Patents, P.O. Box 1450, Alexandria, VA 22313-1450.**

If you need assistance in completing the form, call 1-800-PTO-9199 and select option 2.

IN THE UNITED STATES PATENT AND TRADEMARK OFFICE

Applicant:	Isik C. KIZILYALLI, et al.	)	Group Art Unit: 1795
Serial No.:	12/605,108	)	Confirmation No.: 9962
Filing Date:	October 23, 2009	)	Examiner: Not Assigned
		)	Docket No.: 0004P/4933P

For: PHOTOVOLTAIC DEVICE

Commissioner of Patents
Washington, D.C. 20231

STATEMENT BY ATTORNEY
IN SUPPORT OF PETITION TO MAKE SPECIAL UNDER THE GREEN TECHNOLOGY PILOT PROGRAM

Sir:

This Petition is sought because the claimed invention materially enhances the quality of the environment, materially contributes to the more efficient utilization and conservation of energy sources, and/or materially contributes to greenhouse gas emission reduction.

In the event that the USPTO determines that the claims are directed to multiple inventions (via a restriction requirement), the applicant agrees to make an election without traverse in a telephonic interview of an invention that meets the eligibility requirements of the program.

The application publication fee has been paid and the above application has been published and assigned publication no. US 2010-0132780 A1. No Office Action has been received as of the date of this Petition.

No fee is required for this Petition.

Respectfully submitted,
SAWYER LAW GROUP, P.C.

September 24, 2010
Date

/Joseph A. Sawyer, Jr./
Joseph A. Sawyer, Jr.
Reg. No. 30,801
(650) 493-4540

UNITED STATES PATENT AND TRADEMARK OFFICE

UNITED STATES DEPARTMENT OF COMMERCE
United States Patent and Trademark Office
Address: COMMISSIONER FOR PATENTS
P.O. Box 1450
Alexandria, Virginia 22313-1450
www.uspto.gov

APPLICATION NO.	FILING DATE	FIRST NAMED INVENTOR	ATTORNEY DOCKET NO.	CONFIRMATION NO.
12/605,108	10/23/2009	Isik C. Kizilyalli	ALTA/0004	9962

26290 7590 10/01/2010
PATTERSON & SHERIDAN, L.L.P.
3040 POST OAK BOULEVARD
SUITE 1500
HOUSTON, TX 77056

EXAMINER

ART UNIT	PAPER NUMBER
1795	

MAIL DATE	DELIVERY MODE
10/01/2010	PAPER

Please find below and/or attached an Office communication concerning this application or proceeding.

The time period for reply, if any, is set in the attached communication.

UNITED STATES PATENT AND TRADEMARK OFFICE

Commissioner for Patents
United States Patent and Trademark Office
P.O. Box 1450
Alexandria, VA 22313-1450
www.uspto.gov

PATTERSON & SHERIDAN, L.L.P.
3040 POST OAK BOULEVARD
SUITE 1500
HOUSTON TX 77056

OCT 01 2010

In re Application of	:	
Kizilyalli et al.	:	DECISION ON PETITION
Application No. 12/605,108	:	TO MAKE SPECIAL UNDER
Filed: 10/23/2009	:	THE GREEN TECHNOLOGY
Attorney Docket No. **ALTA/0004**	:	PILOT PROGRAM

This is a decision on the petition under 37 CFR 1.102, filed 9/24/2010, to make the above-identified application special under the pilot program for applications pertaining to Green Technologies as set forth 74 Federal Register Notice 64666 (December 8, 2009).

The petition is **GRANTED**.

A grantable petition to make an application special under 37 CFR 1.102 and the pilot program as set forth in 74 FR 64666 must be directed to a nonprovisional application filed under 35 USC 111(a) or be a national stage entry under 35 USC 371, exclusive of any reissue applications and be filed prior to the date of the notice, December 8, 2009.

In order to qualify for special status, the following requirements must be met. 1) The application must have no more than 3 independent claims and no more than 20 total claims. 2) The application must not contain any multiple dependent claims. 3) The petition must state the basis for seeking special status, i.e., the claimed invention either: A) materially enhances the quality of the environment or B) materially contributes to: i) the discovery or development of renewable energy resources, ii) the more efficient utilization and conservation of energy resources, or iii) greenhouse gas emission reduction. 4) If the disclosure is not clear on its face that the claimed invention materially contributes under category (A) or (B), the petition must be accompanied by a statement by the applicant, assignee, or an attorney/agent registered to practice before the Office explaining how the materiality standard is met. 5) A statement that applicant will agree to make an election without traverse in a telephonic interview if a restriction requirement is made by the examiner. 6) The petition to make special must be filed electronically. 7) The petition must be filed at least one day prior to the date that a first Office Action appears in the Patent Application Information Retrieval (PAIR) system. 8) The petition must be accompanied by a request for early publication in compliance with 37 CFR 1.219 and include the publication fee as set forth in 37 CFR 1.18(d).

The requirement for a fee for consideration of the petition to make special for applications pertaining to Green Technologies has been waived.

The instant petition complies with items 1 – 8 above. Accordingly, the above-identified application has been accorded "special" status.

Telephone inquires concerning this decision should be directed to Tom Dunn at 571-272-1171.

The application is being forwarded to the Technology Center Art Unit 1795 for action on the merits commensurate with this decision.

/Tom Dunn/

Tom Dunn
Quality Assurance Specialist
Technology Center 1700

Doc Code: PET.GREEN
Document Description: Petition for Green Tech Pilot

PTO/SB/420 (05-10)
Approved for use through 01/31/2011. OMB 0651-0062
U.S. Patent and Trademark Office; U. S. DEPARTMENT OF COMMERCE
Under the Paperwork Reduction Act of 1995, no persons are required to respond to a collection of information unless it displays a valid OMB control number.

PETITION TO MAKE SPECIAL UNDER THE GREEN TECHNOLOGY PILOT PROGRAM

Attorney Docket Number: 0005P/4934P	Application Number (if known): 12/605,129	Filing date: 10/23/2009

First Named Inventor: Isik C. KIZILYALLI

Title: THIN ABSORBER LAYER OF A PHOTOVOLTAIC DEVICE

APPLICANT HEREBY REQUESTS TO PARTICIPATE IN THE GREEN TECHNOLOGY PILOT PROGRAM FOR THE ABOVE-IDENTIFIED APPLICATION. See Instruction Sheet on page 2.

This petition must be timely filed electronically using the USPTO electronic filing system, EFS-Web.

1. By filing this petition:

   Applicant is requesting early publication: Applicant hereby requests early publication under 37 CFR 1.219 and the publication fee set forth in 37 CFR 1.18(d) accompanies this request.

2. By filing this petition: applicant is agreeing to make an election without traverse in a telephonic interview and elect an invention that meets the eligibility requirements set forth in the notice titled "Pilot Program for Green Technologies Including Greenhouse Gas Reduction," as modified by the notice titled "Elimination of Classification Requirement in the Green Technology Pilot Program," each of which was published in the Federal Register, if the Office determines that the claims are not obviously directed to a single invention.

3. This request is accompanied by statements of special status for the eligibility requirement.

4. The application contains no more than three (3) independent claims and twenty (20) total claims.

5. The application does not contain any multiple dependent claims.

6. Other attachments: Preliminary Amendment

Signature /Joseph A. Sawyer, Jr./	Date September 24, 2010
Name (Print/Typed) Joseph A. Sawyer, Jr.	Registration Number 30801

***Note**: Signatures of all the inventors or assignees of record of the entire interest or their representative(s) are required in accordance with 37 CFR 1.33 and 11.18. Please see 37 CFR 1.4(d) for the form of the signature. If necessary, submit multiple forms for more than one signature, see below*.*

☑ *Total of 1 forms are submitted.

The information is required to obtain or retain a benefit by the public which is to file (and by the USPTO to process) an application. Confidentiality is governed by 35 U.S.C. 122 and 37 CFR 1.11 and 1.14. This collection is estimated to take 1 hour to complete, including gathering, preparing, and submitting the completed application form to the USPTO. Time will vary depending upon the individual case. Any comments on the amount of time you require to complete this form and/or suggestions for reducing this burden, should be sent to the Chief Information Officer, U.S. Patent and Trademark Office, U.S. Department of Commerce, P.O. Box 1450, Alexandria, VA 22313-1450. DO NOT SEND FEES OR COMPLETED FORMS TO THIS ADDRESS. **SEND TO: Commissioner for Patents, P.O. Box 1450, Alexandria, VA 22313-1450.**

If you need assistance in completing the form, call 1-800-PTO-9199 and select option 2.

UNITED STATES PATENT AND TRADEMARK OFFICE

UNITED STATES DEPARTMENT OF COMMERCE
United States Patent and Trademark Office
Address: COMMISSIONER FOR PATENTS
P.O. Box 1450
Alexandria, Virginia 22313-1450
www.uspto.gov

APPLICATION NO.	FILING DATE	FIRST NAMED INVENTOR	ATTORNEY DOCKET NO.	CONFIRMATION NO.
12/605,129	10/23/2009	Isik C. Kizilyalli	ALTA/0005	1003

26290 7590 10/01/2010
PATTERSON & SHERIDAN, L.L.P.
3040 POST OAK BOULEVARD
SUITE 1500
HOUSTON, TX 77056

EXAMINER

ART UNIT	PAPER NUMBER
1795	

MAIL DATE	DELIVERY MODE
10/01/2010	PAPER

Please find below and/or attached an Office communication concerning this application or proceeding.

The time period for reply, if any, is set in the attached communication.

UNITED STATES PATENT AND TRADEMARK OFFICE

Commissioner for Patents
United States Patent and Trademark Office
P.O. Box 1450
Alexandria, VA 22313-1450
www.uspto.gov

PATTERSON & SHERIDAN, L.L.P.
3040 POST OAK BOULEVARD
SUITE 1500
HOUSTON TX 77056

OCT 01 2010

In re Application of	:	
Kizilyalli et al.	:	DECISION ON PETITION
Application No. 12/605,129	:	TO MAKE SPECIAL UNDER
Filed: 10/23/2009	:	THE GREEN TECHNOLOGY
Attorney Docket No. **ALTA/0005**	:	PILOT PROGRAM

This is a decision on the petition under 37 CFR 1.102, filed 9/24/2010, to make the above-identified application special under the pilot program for applications pertaining to Green Technologies as set forth 74 Federal Register Notice 64666 (December 8, 2009).

The petition is **GRANTED**.

A grantable petition to make an application special under 37 CFR 1.102 and the pilot program as set forth in 74 FR 64666 must be directed to a nonprovisional application filed under 35 USC 111(a) or be a national stage entry under 35 USC 371, exclusive of any reissue applications and be filed prior to the date of the notice, December 8, 2009.

In order to qualify for special status, the following requirements must be met. 1) The application must have no more than 3 independent claims and no more than 20 total claims. 2) The application must not contain any multiple dependent claims. 3) The petition must state the basis for seeking special status, i.e., the claimed invention either: A) materially enhances the quality of the environment or B) materially contributes to: i) the discovery or development of renewable energy resources, ii) the more efficient utilization and conservation of energy resources, or iii) greenhouse gas emission reduction. 4) If the disclosure is not clear on its face that the claimed invention materially contributes under category (A) or (B), the petition must be accompanied by a statement by the applicant, assignee, or an attorney/agent registered to practice before the Office explaining how the materiality standard is met. 5) A statement that applicant will agree to make an election without traverse in a telephonic interview if a restriction requirement is made by the examiner. 6) The petition to make special must be filed electronically. 7) The petition must be filed at least one day prior to the date that a first Office Action appears in the Patent Application Information Retrieval (PAIR) system. 8) The petition must be accompanied by a request for early publication in compliance with 37 CFR 1.219 and include the publication fee as set forth in 37 CFR 1.18(d).

The requirement for a fee for consideration of the petition to make special for applications pertaining to Green Technologies has been waived.

The instant petition complies with items 1 – 8 above. Accordingly, the above-identified application has been accorded "special" status.

Telephone inquires concerning this decision should be directed to Tom Dunn at 571-272-1171.

The application is being forwarded to the Technology Center Art Unit 1795 for action on the merits commensurate with this decision.

/Tom Dunn/

Tom Dunn
Quality Assurance Specialist
Technology Center 1700

UNITED STATES PATENT AND TRADEMARK OFFICE

Commissioner for Patents
United States Patent and Trademark Office
P.O. Box 1450
Alexandria, VA 22313-1450
www.uspto.gov

CHOATE, HALL & STEWART / CITRIX SYSTEMS, INC.
TWO INTERNATIONAL PLACE
BOSTON MA 02110

MAILED

DEC 02 2010

OFFICE OF PETITIONS

In re Application of Marano et al. Application No. 12/605,132 Filed: October 23, 2009 Attorney Docket No. 2006579-1833 (CTX-467)	: : : : :	DECISION ON PETITION TO WITHDRAW FROM RECORD

This is a decision on the Request to Withdraw as Attorney or Agent under 37 C.F.R. § 1.36(b) or 37 C.F.R. § 10.40, filed November 10, 2010.

The request is **DISMISSED**.

A review of the file record indicates that practitioner signing the request, Brenda Herschbach Jarrell, and the other attorneys/agents of Choate, Hall & Stewart: (1) do not have power of attorney in this patent application; but (2) have been employed or otherwise engaged in the proceedings in this patent application.

The Office will no longer approve requests from practitioners to withdraw from applications where the requesting practitioner was never given power of attorney but is acting, or has acted, in a representative capacity pursuant to 37 CFR 1.34. In these situations, the practitioner is responsible for the correspondence the practitioner files in the application while acting in a representative capacity. As such, there is no need for the practitioner to obtain the Office's permission to withdraw from representation.

Further, the change of correspondence address as listed in the Request to Withdraw cannot be accepted because it was not signed by an attorney of record. *See MPEP §§ 601.03 and 405.* If the applicants wish future correspondence to be mailed to a new law firm, a new power of attorney should be submitted in the application and should include the desired change of correspondence address. The Office will continue to mail all future correspondence solely to the address of record until otherwise properly notified by the applicant.

Telephone inquires concerning this decision should be directed to the undersigned at 571-272-3206.

Liana Walsh
Petitions Examiner
Office of Petitions

Doc Code: PET.GREEN
Document Description: Petition for Green Tech Pilot

PTO/SB/420 (05-10)
Approved for use through 01/31/2011. OMB 0651-0062
U.S. Patent and Trademark Office; U. S. DEPARTMENT OF COMMERCE
Under the Paperwork Reduction Act of 1995, no persons are required to respond to a collection of information unless it displays a valid OMB control number.

PETITION TO MAKE SPECIAL UNDER THE GREEN TECHNOLOGY PILOT PROGRAM

Attorney Docket Number: 0006P/4935P	Application Number (if known): 12/605,140	Filing date: 10/23/2009

First Named Inventor: Isik C. KIZILYALLI

Title: PHOTOVOLTAIC DEVICE WITH INCRESED LIGHT TRAPPING

APPLICANT HEREBY REQUESTS TO PARTICIPATE IN THE GREEN TECHNOLOGY PILOT PROGRAM FOR THE ABOVE-IDENTIFIED APPLICATION. See Instruction Sheet on page 2.

This petition must be timely filed electronically using the USPTO electronic filing system, EFS-Web.

1. By filing this petition:

   Applicant is requesting early publication: Applicant hereby requests early publication under 37 CFR 1.219 and the publication fee set forth in 37 CFR 1.18(d) accompanies this request.

2. By filing this petition: applicant is agreeing to make an election without traverse in a telephonic interview and elect an invention that meets the eligibility requirements set forth in the notice titled "Pilot Program for Green Technologies Including Greenhouse Gas Reduction," as modified by the notice titled "Elimination of Classification Requirement in the Green Technology Pilot Program," each of which was published in the Federal Register, if the Office determines that the claims are not obviously directed to a single invention.

3. This request is accompanied by statements of special status for the eligibility requirement.

4. The application contains no more than three (3) independent claims and twenty (20) total claims.

5. The application does not contain any multiple dependent claims.

6. Other attachments: Preliminary Amendment

Signature /Joseph A. Sawyer, Jr./	Date September 24, 2010
Name (Print/Typed) Joseph A. Sawyer, Jr.	Registration Number 30801

***Note**: Signatures of all the inventors or assignees of record of the entire interest or their representative(s) are required in accordance with 37 CFR 1.33 and 11.18. Please see 37 CFR 1.4(d) for the form of the signature. If necessary, submit multiple forms for more than one signature, see below*.*

☑ *Total of 1 forms are submitted.

The information is required to obtain or retain a benefit by the public which is to file (and by the USPTO to process) an application. Confidentiality is governed by 35 U.S.C. 122 and 37 CFR 1.11 and 1.14. This collection is estimated to take 1 hour to complete, including gathering, preparing, and submitting the completed application form to the USPTO. Time will vary depending upon the individual case. Any comments on the amount of time you require to complete this form and/or suggestions for reducing this burden, should be sent to the Chief Information Officer, U.S. Patent and Trademark Office, U.S. Department of Commerce, P.O. Box 1450, Alexandria, VA 22313-1450. DO NOT SEND FEES OR COMPLETED FORMS TO THIS ADDRESS. **SEND TO: Commissioner for Patents, P.O. Box 1450, Alexandria, VA 22313-1450.**

If you need assistance in completing the form, call 1-800-PTO-9199 and select option 2.

IN THE UNITED STATES PATENT AND TRADEMARK OFFICE

Applicant:	Isik C. KIZILYALLI, et al.	)	Group Art Unit: 1795
Serial No.:	12/605,140	)	Confirmation No.: 1032
Filing Date:	October 23, 2009	)	Examiner: Not Assigned
		)	Docket No.: 0006P/4935P

For: PHOTOVOLTAIC DEVICE WITH INCREASED LIGHT TRAPPING

Commissioner of Patents
Washington, D.C. 20231

STATEMENT BY ATTORNEY
IN SUPPORT OF PETITION TO MAKE SPECIAL UNDER THE GREEN TECHNOLOGY PILOT PROGRAM

Sir:

This Petition is sought because the claimed invention materially enhances the quality of the environment, materially contributes to the more efficient utilization and conservation of energy sources, and/or materially contributes to greenhouse gas emission reduction.

In the event that the USPTO determines that the claims are directed to multiple inventions (via a restriction requirement), the applicant agrees to make an election without traverse in a telephonic interview of an invention that meets the eligibility requirements of the program.

The application publication fee has been paid and the above application has been published and assigned publication no. US 2010-0126571 A1. No Office Action has been received as of the date of this Petition.

No fee is required for this Petition.

Respectfully submitted,
SAWYER LAW GROUP, P.C.

September 24, 2010
Date

/Joseph A. Sawyer, Jr./
Joseph A. Sawyer, Jr.
Reg. No. 30,801
(650) 493-4540

UNITED STATES PATENT AND TRADEMARK OFFICE

UNITED STATES DEPARTMENT OF COMMERCE
United States Patent and Trademark Office
Address: COMMISSIONER FOR PATENTS
P.O. Box 1450
Alexandria, Virginia 22313-1450
www.uspto.gov

APPLICATION NO.	FILING DATE	FIRST NAMED INVENTOR	ATTORNEY DOCKET NO.	CONFIRMATION NO.
12/605,140	10/23/2009	Isik C. Kizilyalli	ALTA/0006	1032

26290 7590 10/01/2010
PATTERSON & SHERIDAN, L.L.P.
3040 POST OAK BOULEVARD
SUITE 1500
HOUSTON, TX 77056

EXAMINER

ART UNIT	PAPER NUMBER
1795	

MAIL DATE	DELIVERY MODE
10/01/2010	PAPER

Please find below and/or attached an Office communication concerning this application or proceeding.

The time period for reply, if any, is set in the attached communication.

UNITED STATES PATENT AND TRADEMARK OFFICE

Commissioner for Patents
United States Patent and Trademark Office
P.O. Box 1450
Alexandria, VA 22313-1450
www.uspto.gov

PATTERSON & SHERIDAN, L.L.P.
3040 POST OAK BOULEVARD
SUITE 1500
HOUSTON TX 77056

OCT 0 1 2010

In re Application of	:	
Kizilyalli et al.	:	DECISION ON PETITION
Application No. 12/605,140	:	TO MAKE SPECIAL UNDER
Filed: 10/23/2009	:	THE GREEN TECHNOLOGY
Attorney Docket No. **ALTA/0006**	:	PILOT PROGRAM

This is a decision on the petition under 37 CFR 1.102, filed 9/24/2010, to make the above-identified application special under the pilot program for applications pertaining to Green Technologies as set forth 74 Federal Register Notice 64666 (December 8, 2009).

The petition is **GRANTED**.

A grantable petition to make an application special under 37 CFR 1.102 and the pilot program as set forth in 74 FR 64666 must be directed to a nonprovisional application filed under 35 USC 111(a) or be a national stage entry under 35 USC 371, exclusive of any reissue applications and be filed prior to the date of the notice, December 8, 2009.

In order to qualify for special status, the following requirements must be met. 1) The application must have no more than 3 independent claims and no more than 20 total claims. 2) The application must not contain any multiple dependent claims. 3) The petition must state the basis for seeking special status, i.e., the claimed invention either: A) materially enhances the quality of the environment or B) materially contributes to: i) the discovery or development of renewable energy resources, ii) the more efficient utilization and conservation of energy resources, or iii) greenhouse gas emission reduction. 4) If the disclosure is not clear on its face that the claimed invention materially contributes under category (A) or (B), the petition must be accompanied by a statement by the applicant, assignee, or an attorney/agent registered to practice before the Office explaining how the materiality standard is met. 5) A statement that applicant will agree to make an election without traverse in a telephonic interview if a restriction requirement is made by the examiner. 6) The petition to make special must be filed electronically. 7) The petition must be filed at least one day prior to the date that a first Office Action appears in the Patent Application Information Retrieval (PAIR) system. 8) The petition must be accompanied by a request for early publication in compliance with 37 CFR 1.219 and include the publication fee as set forth in 37 CFR 1.18(d).

The requirement for a fee for consideration of the petition to make special for applications pertaining to Green Technologies has been waived.

The instant petition complies with items 1 – 8 above. Accordingly, the above-identified application has been accorded "special" status.

Telephone inquires concerning this decision should be directed to Tom Dunn at 571-272-1171.

The application is being forwarded to the Technology Center Art Unit 1795 for action on the merits commensurate with this decision.

/Tom Dunn/

Tom Dunn
Quality Assurance Specialist
Technology Center 1700

Doc Code: PET.GREEN
Document Description: Petition for Green Tech Pilot

PTO/SB/420 (05-10)
Approved for use through 01/31/2011. OMB 0651-0062
U.S. Patent and Trademark Office; U. S. DEPARTMENT OF COMMERCE
Under the Paperwork Reduction Act of 1995, no persons are required to respond to a collection of information unless it displays a valid OMB control number.

PETITION TO MAKE SPECIAL UNDER THE GREEN TECHNOLOGY PILOT PROGRAM

Attorney Docket Number: 0007P/4936P	Application Number (if known): 12/605,151	Filing date: 10/23/2009

First Named Inventor: Isik C. KIZILYALLI

Title: PHOTOVOLTAIC DEVICE WITH BACK SIDE CONTACTS

APPLICANT HEREBY REQUESTS TO PARTICIPATE IN THE GREEN TECHNOLOGY PILOT PROGRAM FOR THE ABOVE-IDENTIFIED APPLICATION. See Instruction Sheet on page 2.

This petition must be timely filed electronically using the USPTO electronic filing system, EFS-Web.

1. By filing this petition:

   Applicant is requesting early publication: Applicant hereby requests early publication under 37 CFR 1.219 and the publication fee set forth in 37 CFR 1.18(d) accompanies this request.

2. By filing this petition: applicant is agreeing to make an election without traverse in a telephonic interview and elect an invention that meets the eligibility requirements set forth in the notice titled "Pilot Program for Green Technologies Including Greenhouse Gas Reduction," as modified by the notice titled "Elimination of Classification Requirement in the Green Technology Pilot Program," each of which was published in the Federal Register, if the Office determines that the claims are not obviously directed to a single invention.

3. This request is accompanied by statements of special status for the eligibility requirement.

4. The application contains no more than three (3) independent claims and twenty (20) total claims.

5. The application does not contain any multiple dependent claims.

6. Other attachments: Preliminary Amendment

Signature /Joseph A. Sawyer, Jr./	Date October 1, 2010
Name (Print/Typed) Joseph A. Sawyer, Jr.	Registration Number 30801

***Note**: Signatures of all the inventors or assignees of record of the entire interest or their representative(s) are required in accordance with 37 CFR 1.33 and 11.18. Please see 37 CFR 1.4(d) for the form of the signature. If necessary, submit multiple forms for more than one signature, see below*.*

☑ *Total of 1 forms are submitted.

The information is required to obtain or retain a benefit by the public which is to file (and by the USPTO to process) an application. Confidentiality is governed by 35 U.S.C. 122 and 37 CFR 1.11 and 1.14. This collection is estimated to take 1 hour to complete, including gathering, preparing, and submitting the completed application form to the USPTO. Time will vary depending upon the individual case. Any comments on the amount of time you require to complete this form and/or suggestions for reducing this burden, should be sent to the Chief Information Officer, U.S. Patent and Trademark Office, U.S. Department of Commerce, P.O. Box 1450, Alexandria, VA 22313-1450. DO NOT SEND FEES OR COMPLETED FORMS TO THIS ADDRESS. **SEND TO: Commissioner for Patents, P.O. Box 1450, Alexandria, VA 22313-1450.**

If you need assistance in completing the form, call 1-800-PTO-9199 and select option 2.

IN THE UNITED STATES PATENT AND TRADEMARK OFFICE

Applicant:	Isik C. KIZILYALLI, et al.	)	Group Art Unit: 1795
Serial No.:	12/605,151	)	Confirmation No.: 1058
Filing Date:	October 23, 2009	)	Examiner: Not Assigned
		)	Docket No.: 0007P/4936P

For: PHOTOVOLTAIC DEVICE WITH BACK SIDE CONTACTS

Commissioner of Patents
Washington, D.C. 20231

STATEMENT BY ATTORNEY
IN SUPPORT OF PETITION TO MAKE SPECIAL UNDER THE GREEN TECHNOLOGY PILOT PROGRAM

Sir:

This Petition is sought because the claimed invention materially enhances the quality of the environment, materially contributes to the more efficient utilization and conservation of energy sources, and/or materially contributes to greenhouse gas emission reduction.

In the event that the USPTO determines that the claims are directed to multiple inventions (via a restriction requirement), the applicant agrees to make an election without traverse in a telephonic interview of an invention that meets the eligibility requirements of the program.

The application publication fee has been paid and the above application has been published and assigned publication no. US 2010-0126572 A1. No Office Action has been received as of the date of this Petition.

No fee is required for this Petition.

Respectfully submitted,
SAWYER LAW GROUP, P.C.

October 1, 2010
Date

/Joseph A. Sawyer, Jr./
Joseph A. Sawyer, Jr.
Reg. No. 30,801
(650) 493-4540

UNITED STATES PATENT AND TRADEMARK OFFICE

UNITED STATES DEPARTMENT OF COMMERCE
United States Patent and Trademark Office
Address: COMMISSIONER FOR PATENTS
P.O. Box 1450
Alexandria, Virginia 22313-1450
www.uspto.gov

APPLICATION NO.	FILING DATE	FIRST NAMED INVENTOR	ATTORNEY DOCKET NO.	CONFIRMATION NO.
12/605,151	10/23/2009	Isik C. Kizilyalli	0007P/4936P	1058

99144 7590 10/21/2010
Alta Devices, Inc.
c/o Sawyer Law Group, P.C.
P.O. Box 51418
Palo Alto, CA 94303

EXAMINER	
ART UNIT	PAPER NUMBER
1795	

NOTIFICATION DATE	DELIVERY MODE
10/21/2010	ELECTRONIC

Please find below and/or attached an Office communication concerning this application or proceeding.

The time period for reply, if any, is set in the attached communication.

Notice of the Office communication was sent electronically on above-indicated "Notification Date" to the following e-mail address(es):

patent@sawyerlawgroup.com

UNITED STATES PATENT AND TRADEMARK OFFICE

Commissioner for Patents
United States Patent and Trademark Office
P.O. Box 1450
Alexandria, VA 22313-1450
www.uspto.gov

Alta Devices, Inc.
c/o Sawyer Law Group, P.C.
P.O. Box 51418
Palo Alto CA 94303

OCT 21 2010

In re Application of	:	
Isik Kizilyalli et al.	:	DECISION ON PETITION
Application No. 12/605,151	:	TO MAKE SPECIAL UNDER
Filed: October 23, 2009	:	THE GREEN TECHNOLOGY
Attorney Docket No. 0007P/4936P	:	PILOT PROGRAM

This is a decision on the petition under 37 CFR 1.102, filed October 01, 2010, to make the above-identified application special under the pilot program for applications pertaining to Green Technologies as set forth 74 Federal Register Notice 64666 (December 8, 2009).

The petition is **GRANTED**.

A grantable petition to make an application special under 37 CFR 1.102 and the pilot program as set forth in 74 FR 64666 must be directed to a nonprovisional application filed under 35 USC 111(a) or be a national stage entry under 35 USC 371, exclusive of any reissue applications and be filed prior to the date of the notice, December 8, 2009.

In order to qualify for special status, the following requirements must be met. 1) The application must have no more than 3 independent claims and no more than 20 total claims. 2) The application must not contain any multiple dependent claims. 3) The petition must state the basis for seeking special status, i.e., the claimed invention either: A) materially enhances the quality of the environment or B) materially contributes to: i) the discovery or development of renewable energy resources, ii) the more efficient utilization and conservation of energy resources, or iii) greenhouse gas emission reduction. 4) If the disclosure is not clear on its face that the claimed invention materially contributes under category (A) or (B), the petition must be accompanied by a statement by the applicant, assignee, or an attorney/agent registered to practice before the Office explaining how the materiality standard is met. 5) A statement that applicant will agree to make an election without traverse in a telephonic interview if a restriction requirement is made by the examiner. 6) The petition to make special must be filed electronically. 7) The petition must be filed at least one day prior to the date that a first Office Action appears in the Patent Application Information Retrieval (PAIR) system. 8) The petition must be accompanied by a request for early publication in compliance with 37 CFR 1.219 and include the publication fee as set forth in 37 CFR 1.18(d).

The requirement for a fee for consideration of the petition to make special for applications pertaining to Green Technologies has been waived.

The instant petition complies with items 1 – 8 above. Accordingly, the above-identified application has been accorded "special" status.

Telephone inquires concerning this decision should be directed to Blaine Copenheaver at 571-272-1156.

The application is being forwarded to the Technology Center Art Unit 1795 for action on the merits commensurate with this decision.

/Blaine Copenheaver/

Blaine Copenheaver
Quality Assurance Specialist
Technology Center 1700

UNITED STATES PATENT AND TRADEMARK OFFICE

Commissioner for Patents
United States Patent and Trademark Office
P.O. Box 1450
Alexandria, VA 22313-1450
www.uspto.gov

FITZPATRICK CELLA HARPER & SCINTO
1290 Avenue of the Americas
NEW YORK NY 10104-3800

MAILED

MAR 23 2011

OFFICE OF PETITIONS

In re Application of :
Toshio Kameshima :
Application No. 12/605,154 : ON PETITION
Filed: October 23, 2009 :
Attorney Docket No. **03500.016566.4** :

This is a decision on the petition under the unintentional provisions of 37 CFR 1.137(b), filed January 19, 2011, to revive the above-identified application.

The application became abandoned for failure to reply in a timely manner to the Notice to File Corrected Application Papers (Notice), mailed November 13, 2009. The Notice set a period for reply of two (2) months from the mail date of the Notice. No extensions of time under the provisions of 37 CFR 1.136(a) were obtained. Accordingly, the application became abandoned on January 14, 2010.

The petition is hereby **DISMISSED**.

A grantable petition under 37 CFR 1.137(b) must be accompanied by: (1) the required reply, unless previously filed; (2) the petition fee as set forth in 37 CFR 1.17(m); (3) a statement that the entire delay in filing the required reply from the due date for the reply until the filing of a grantable petition pursuant to 37 CFR 1.137(b) was unintentional; and (4) any terminal disclaimer (and fee as set forth in 37 CFR 1.20(d)) required by 37 CFR 1.137(d). Where there is a question as to whether either the abandonment or the delay in filing a petition under 37 CFR 1.137 was unintentional, the Director may require additional information. See MPEP 711.03(c)(II)(C) and (D). The instant petition lacks item(s) (1).

The petition does not satisfy item (1) in that (a) the drawings filed concurrently with the instant petition lack the labeling "Replacement Sheet" for compliance with 37 CFR 1.84(c) and 37 CFR 1.121(d) required by the Notice and (b) in the declaration filed concurrently with the instant petition, "examination" needs to be replaced with –patentability—in the "duty to disclose" statement. This application can not be granted until the items noted above are corrected.

Any request for reconsideration of this decision must be submitted within **TWO (2) MONTHS** from the mail date of this decision. Extensions of time under 37 CFR 1.136(a) are permitted. The reconsideration request should include a cover letter entitled "**Renewed Petition under 37 CFR 1.137(b).**" This is **not** a final agency action within the meaning of 5 U.S.C. § 704.

Further correspondence with respect to this matter should be addressed as follows:

By Mail: Mail Stop PETITION
Commissioner for Patents
P. O. Box 1450
Alexandria, VA 22313-1450

By hand: U. S. Patent and Trademark Office
Customer Service Window, Mail Stop Petitions
Randolph Building
401 Dulany Street
Alexandria, VA 22314

The centralized facsimile number is **(571) 273-8300.**

Telephone inquiries concerning this decision should be directed to JoAnne Burke at 571-272-4584

JoAnne Burke
Petitions Examiner
Office of Petitions

UNITED STATES PATENT AND TRADEMARK OFFICE

Commissioner for Patents
United States Patent and Trademark Office
P.O. Box 1450
Alexandria, VA 22313-1450
www.uspto.gov

MAILED
MAY 27 2011
OFFICE OF PETITIONS

FITZPATRICK CELLA HARPER & SCINTO
1290 Avenue of the Americas
NEW YORK NY 10104-3800

In re Application of	:	
Toshio Kameshima	:	
Application No. 12/605,154	:	ON PETITION
Filed: October 23, 2009	:	
Attorney Docket No. **03500.016566.4**	:	

This is a decision on the renewed petition, filed May 23, 2011, captioned as "RENEWED PETITION UNDER 37 C.F.R. § 1.137(b) TO WITHDRAW HOLDING OF ABANDONMENT" which is being treated as a petition under the unintentional provisions of 37 CFR 1.137(b), to revive the above-identified application.

The application became abandoned for failure to reply in a timely manner to the Notice to File Corrected Application Papers (Notice), mailed November 13, 2009. The Notice set a period for reply of two (2) months from the mail date of the Notice. No extensions of time under the provisions of 37 CFR 1.136(a) were obtained. Accordingly, the application became abandoned on January 14, 2010.

The petition is hereby **GRANTED**.

The petition satisfies the requirements of 37 CFR 1.137(b) in that petitioner has supplied (1) the reply in the form of replacement drawings, (2) the petition fee of $1,620 (3) a proper statement of unintentional delay.

Telephone inquiries concerning this decision should be directed to JoAnne Burke at 571-272-4584.

This application is being referred to the Office of Patent Application Processing.

JoAnne Burke
Petitions Examiner
Office of Petitions

Doc Code: PET.GREEN
Document Description: Petition for Green Tech Pilot

PTO/SB/420 (05-10)
Approved for use through 01/31/2011. OMB 0651-0062
U.S. Patent and Trademark Office; U. S. DEPARTMENT OF COMMERCE
Under the Paperwork Reduction Act of 1995, no persons are required to respond to a collection of information unless it displays a valid OMB control number.

PETITION TO MAKE SPECIAL UNDER THE GREEN TECHNOLOGY PILOT PROGRAM

Attorney Docket Number: 0008P/4937P	Application Number (if known): 12/605,163	Filing date: 10/23/2009

First Named Inventor: Isik C. KIZILYALLI

Title: INTEGRATION OF A PHOTOVOLTAIC DEVICE

APPLICANT HEREBY REQUESTS TO PARTICIPATE IN THE GREEN TECHNOLOGY PILOT PROGRAM FOR THE ABOVE-IDENTIFIED APPLICATION. See Instruction Sheet on page 2.

This petition must be timely filed electronically using the USPTO electronic filing system, EFS-Web.

1. By filing this petition:

   Applicant is requesting early publication: Applicant hereby requests early publication under 37 CFR 1.219 and the publication fee set forth in 37 CFR 1.18(d) accompanies this request.

2. By filing this petition: applicant is agreeing to make an election without traverse in a telephonic interview and elect an invention that meets the eligibility requirements set forth in the notice titled "Pilot Program for Green Technologies Including Greenhouse Gas Reduction," as modified by the notice titled "Elimination of Classification Requirement in the Green Technology Pilot Program," each of which was published in the Federal Register, if the Office determines that the claims are not obviously directed to a single invention.

3. This request is accompanied by statements of special status for the eligibility requirement.

4. The application contains no more than three (3) independent claims and twenty (20) total claims.

5. The application does not contain any multiple dependent claims.

6. Other attachments: Preliminary Amendment

Signature /Joseph A. Sawyer, Jr./	Date October 1, 2010
Name (Print/Typed) Joseph A. Sawyer, Jr.	Registration Number 30801

***Note**: Signatures of all the inventors or assignees of record of the entire interest or their representative(s) are required in accordance with 37 CFR 1.33 and 11.18. Please see 37 CFR 1.4(d) for the form of the signature. If necessary, submit multiple forms for more than one signature, see below*.*

☑ *Total of 1 forms are submitted.

The information is required to obtain or retain a benefit by the public which is to file (and by the USPTO to process) an application. Confidentiality is governed by 35 U.S.C. 122 and 37 CFR 1.11 and 1.14. This collection is estimated to take 1 hour to complete, including gathering, preparing, and submitting the completed application form to the USPTO. Time will vary depending upon the individual case. Any comments on the amount of time you require to complete this form and/or suggestions for reducing this burden, should be sent to the Chief Information Officer, U.S. Patent and Trademark Office, U.S. Department of Commerce, P.O. Box 1450, Alexandria, VA 22313-1450. DO NOT SEND FEES OR COMPLETED FORMS TO THIS ADDRESS. **SEND TO: Commissioner for Patents, P.O. Box 1450, Alexandria, VA 22313-1450.**

If you need assistance in completing the form, call 1-800-PTO-9199 and select option 2.

UNITED STATES PATENT AND TRADEMARK OFFICE

UNITED STATES DEPARTMENT OF COMMERCE
United States Patent and Trademark Office
Address: COMMISSIONER FOR PATENTS
P.O. Box 1450
Alexandria, Virginia 22313-1450
www.uspto.gov

APPLICATION NO.	FILING DATE	FIRST NAMED INVENTOR	ATTORNEY DOCKET NO.	CONFIRMATION NO.
12/605,163	10/23/2009	Isik C. Kizilyalli	0008P/4937P	1086

99144 7590 10/21/2010
Alta Devices, Inc.
c/o Sawyer Law Group, P.C.
P.O. Box 51418
Palo Alto, CA 94303

EXAMINER

ART UNIT	PAPER NUMBER
1795	

NOTIFICATION DATE	DELIVERY MODE
10/21/2010	ELECTRONIC

Please find below and/or attached an Office communication concerning this application or proceeding.

The time period for reply, if any, is set in the attached communication.

Notice of the Office communication was sent electronically on above-indicated "Notification Date" to the following e-mail address(es):

patent@sawyerlawgroup.com

UNITED STATES PATENT AND TRADEMARK OFFICE

Commissioner for Patents
United States Patent and Trademark Office
P.O. Box 1450
Alexandria, VA 22313-1450
www.uspto.gov

Alta Devices, Inc.
c/o Sawyer Law Group, P.C.
P.O. Box 51418
Palo Alto CA 94303

OCT 21 2010

In re Application of	:	
Isik Kizilyalli et al.	:	DECISION ON PETITION
Application No. 12/605,163	:	TO MAKE SPECIAL UNDER
Filed: October 23, 2009	:	THE GREEN TECHNOLOGY
Attorney Docket No. 0008P/4937P	:	PILOT PROGRAM

This is a decision on the petition under 37 CFR 1.102, filed October 01, 2010, to make the above-identified application special under the pilot program for applications pertaining to Green Technologies as set forth 74 Federal Register Notice 64666 (December 8, 2009).

The petition is **GRANTED**.

A grantable petition to make an application special under 37 CFR 1.102 and the pilot program as set forth in 74 FR 64666 must be directed to a nonprovisional application filed under 35 USC 111(a) or be a national stage entry under 35 USC 371, exclusive of any reissue applications and be filed prior to the date of the notice, December 8, 2009.

In order to qualify for special status, the following requirements must be met. 1) The application must have no more than 3 independent claims and no more than 20 total claims. 2) The application must not contain any multiple dependent claims. 3) The petition must state the basis for seeking special status, i.e., the claimed invention either: A) materially enhances the quality of the environment or B) materially contributes to: i) the discovery or development of renewable energy resources, ii) the more efficient utilization and conservation of energy resources, or iii) greenhouse gas emission reduction. 4) If the disclosure is not clear on its face that the claimed invention materially contributes under category (A) or (B), the petition must be accompanied by a statement by the applicant, assignee, or an attorney/agent registered to practice before the Office explaining how the materiality standard is met. 5) A statement that applicant will agree to make an election without traverse in a telephonic interview if a restriction requirement is made by the examiner. 6) The petition to make special must be filed electronically. 7) The petition must be filed at least one day prior to the date that a first Office Action appears in the Patent Application Information Retrieval (PAIR) system. 8) The petition must be accompanied by a request for early publication in compliance with 37 CFR 1.219 and include the publication fee as set forth in 37 CFR 1.18(d).

The requirement for a fee for consideration of the petition to make special for applications pertaining to Green Technologies has been waived.

The instant petition complies with items 1 – 8 above. Accordingly, the above-identified application has been accorded "special" status.

Telephone inquires concerning this decision should be directed to Blaine Copenheaver at 571-272-1156.

The application is being forwarded to the Technology Center Art Unit 1795 for action on the merits commensurate with this decision.

/Blaine Copenheaver/

Blaine Copenheaver
Quality Assurance Specialist
Technology Center 1700

UNITED STATES PATENT AND TRADEMARK OFFICE

Commissioner for Patents
United States Patent and Trademark Office
P.O. Box 1450
Alexandria, VA 22313-1450
www.uspto.gov

DUBOIS, BRYANT, CAMPBELL & SCHWARTZ, LLP
700 LAVACA STREET
SUITE 1300
AUSTIN TX 78701

MAILED
OCT 08 2010
OFFICE OF PETITIONS

In re Application of	:	
Michael Patton, et al.	:	
Application No. 12/605,199	:	DECISION ON PETITION
Filed: October 23, 2009	:	
Attorney Docket No. Patton	:	

This is a decision on the petition under the unintentional provisions of 37 CFR 1.137(b), filed September 16, 2010, to revive the above-identified application.

The petition is **GRANTED.**

The application became abandoned for failure to reply in a timely manner to the Notice to File Missing Parts of Nonprovisional Application (Notice), mailed November 12, 2009. The Notice set a period for reply of two (2) months from the mail date of the Notice. No extensions of time under the provisions of 37 CFR 1.136(a) were obtained. Accordingly, the application became abandoned on January 13, 2010. The Notice of Abandonment was mailed July 19, 2010.

The petition satisfies the requirements of 37 CFR 1.137(b) in that petitioner has supplied (1) the reply in the form of an oath or declaration, replacement drawings and $65 surcharge, (2) the petition fee of $810, and (3) a proper statement of unintentional delay.

Telephone inquiries concerning this decision should be directed to Terri Johnson at (571) 272-2991.

This application is being referred to the Office of Patent Application Processing for appropriate action on the reply received.

/Terri Johnson/
Terri Johnson
Petitions Examiner
Office of Petitions

PTO/SB/20PCT-KR (06-10)
Approved for use through 01/31/2012. OMB 0651-0058
U.S. Patent and Trademark Office; U. S. DEPARTMENT OF COMMERCE
Under the Paperwork Reduction Act of 1995, no persons are required to respond to a collection of information unless it displays a valid OMB control number.

REQUEST FOR PARTICIPATION IN THE PATENT COOPERATION TREATY - PATENT PROSECUTION HIGHWAY (PCT-PPH) PILOT PROGRAM BETWEEN THE KOREAN INTELLECTUAL PROPERTY OFFICE (KIPO) AND THE USPTO

Application No:	12/605226	Filing date:	October 23, 2009
First Named Inventor:	Christopher K. Wyatt		
Title of the Invention:	CONTROL SYSTEMS AND METHODS FOR ELECTRIC MOTORS OF UTILITY VEHICLES		

THIS REQUEST FOR PARTICIPATION IN THE PCT-PPH PILOT PROGRAM ALONG WITH THE REQUIRED DOCUMENTS MUST BE SUBMITTED VIA EFS-WEB. INFORMATION REGARDING EFS-WEB IS AVAILABLE AT HTTP://WWW.USPTO.GOV/EBC/EFS_HELP.HTML

APPLICANT HEREBY REQUESTS PARTICIPATION IN THE PCT-PPH PROGRAM AND PETITIONS TO MAKE THE ABOVE-IDENTIFIED APPLICATION SPECIAL UNDER THE PCT-PPH PROGRAM.

The above-identified application is (1) a national stage entry of the corresponding PCT application, or (2) a national stage entry of another PCT application which claims priority to the corresponding PCT application, or (3) a national application that claims domestic/ foreign priority to the corresponding PCT application, or (4) a national application which forms the basis for the priority claim in the corresponding PCT application, or (5) a continuing application of a U.S. application that satisfies one of (1) to (4) above, or (6) a U.S. application that claims domestic benefit to a U.S. provisional application which forms the basis for the priority claim in the corresponding PCT application.

The corresponding PCT application number(s) is/are: PCT/US2009/061929

The international date of the corresponding PCT application(s) is/are: 10/23/2009

I. List of Required Documents:

a. **A copy of the latest international work product (WO/ISA, WO/IPEA, or IPER) in the above–identified corresponding PCT application(s)**

- [x] Is attached.
- [ ] Is not attached because the document is already in the U.S. application.

b. **A copy of all claims which were indicated as having novelty, inventive step and industrial applicability in the above-identified corresponding PCT application(s).**

- [ ] Is attached.
- [x] Is not attached because the document is already in the U.S. application.

c. **English translations of the documents in a. and b. above are attached (if the documents are not in the English language). A statement that the English translation is accurate is attached for the document in b. above.**

This collection of information is required by 35 U.S.C. 119, 37 CFR 1.55, and 37 CFR 1.102(d). The information is required to obtain or retain a benefit by the public, which is to file (and by the USPTO to process) an application. Confidentiality is governed by 35 U.S.C. 122 and 37 CFR 1.11 and 1.14. This collection is estimated to take 2 hours to complete, including gathering, preparing, and submitting the completed application form to the USPTO. Time will vary depending upon the individual case. Any comments on the amount of time you require to complete this form and/or suggestions for reducing this burden should be sent to the Chief Information Officer, U.S. Patent and Trademark Office, U.S. Department of Commerce, P.O. Box 1450, Alexandria, VA 22313-1450. DO NOT SEND FEES OR COMPLETED FORMS TO THIS ADDRESS.

Approved for use through 01/31/2012. OMB 0651-0058
U.S.Patent and Trademark Office; U.S. DEPARTMENT OF COMMERCE
Under the Paperwork Reduction Act of 1995, no persons are required to respond to a collection of information unless it displays a valid OMB control number.

REQUEST FOR PARTICIPATION IN THE PCT-PPH PILOT PROGRAM BETWEEN THE KIPO AND THE USPTO

(continued)

Application No.:	12/605226
First Named Inventor:	Christopher K. Wyatt

d. **(1) An information disclosure statement listing the documents cited in the international work products (ISR, WO/ISA, WO/IPEA, IPER) of the corresponding PCT application.**

☒ Is attached

☐ Has already been filed in the above-identified U.S. application on _____

(2) Copies of all documents (except) for U.S. patents or U.S. patent application publications)

☒ Are attached.

Have already been filed in the above-identified U.S. application on _____

II. Claims Correspondence Table:

Claims in US Application	Patentable Claims in the corresponding PCT Application	Explanation regarding the correspondence
Claim 1-34	Claim 1-34	Identical

III. All the claims in the US application sufficiently correspond to the patentable claims in the corresponding PCT application.

Signature /William J. Lenz/	Date September 3, 2010
Name (Print/Typed) William J. Lenz	Registration Number 44,208

Privacy Act Statement

The **Privacy Act of 1974 (P.L. 93-579)** requires that you be given certain information in connection with your submission of the attached form related to a patent application or patent. Accordingly, pursuant to the requirements of the Act, please be advised that: (1) the general authority for the collection of this information is 35 U.S.C. 2(b)(2); (2) furnishing of the information solicited is voluntary; and (3) the principal purpose for which the information is used by the U.S. Patent and Trademark Office is to process and/or examine your submission related to a patent application or patent. If you do not furnish the requested information, the U.S. Patent and Trademark Office may not be able to process and/or examine your submission, which may result in termination of proceedings or abandonment of the application or expiration of the patent.

The information provided by you in this form will be subject to the following routine uses:

1. The information on this form will be treated confidentially to the extent allowed under the Freedom of Information Act (5 U.S.C. 552) and the Privacy Act (5 U.S.C 552a). Records from this system of records may be disclosed to the Department of Justice to determine whether disclosure of these records is required by the Freedom of Information Act.
2. A record from this system of records may be disclosed, as a routine use, in the course of presenting evidence to a court, magistrate, or administrative tribunal, including disclosures to opposing counsel in the course of settlement negotiations.
3. A record in this system of records may be disclosed, as a routine use, to a Member of Congress submitting a request involving an individual, to whom the record pertains, when the individual has requested assistance from the Member with respect to the subject matter of the record.
4. A record in this system of records may be disclosed, as a routine use, to a contractor of the Agency having need for the information in order to perform a contract. Recipients of information shall be required to comply with the requirements of the Privacy Act of 1974, as amended, pursuant to 5 U.S.C. 552a(m).
5. A record related to an International Application filed under the Patent Cooperation Treaty in this system of records may be disclosed, as a routine use, to the International Bureau of the World Intellectual Property Organization, pursuant to the Patent Cooperation Treaty.
6. A record in this system of records may be disclosed, as a routine use, to another federal agency for purposes of National Security review (35 U.S.C. 181) and for review pursuant to the Atomic Energy Act (42 U.S.C. 218(c)).
7. A record from this system of records may be disclosed, as a routine use, to the Administrator, General Services, or his/her designee, during an inspection of records conducted by GSA as part of that agency's responsibility to recommend improvements in records management practices and programs, under authority of 44 U.S.C. 2904 and 2906. Such disclosure shall be made in accordance with the GSA regulations governing inspection of records for this purpose, and any other relevant (*i.e.*, GSA or Commerce) directive. Such disclosure shall not be used to make determinations about individuals.
8. A record from this system of records may be disclosed, as a routine use, to the public after either publication of the application pursuant to 35 U.S.C. 122(b) or issuance of a patent pursuant to 35 U.S.C. 151. Further, a record may be disclosed, subject to the limitations of 37 CFR 1.14, as a routine use, to the public if the record was filed in an application which became abandoned or in which the proceedings were terminated and which application is referenced by either a published application, an application open to public inspection or an issued patent.
9. A record from this system of records may be disclosed, as a routine use, to a Federal, State, or local law enforcement agency, if the USPTO becomes aware of a violation or potential violation of law or regulation.

PCT/US2009/061929

PATENT COOPERATION TREATY

From the INTERNATIONAL SEARCHING AUTHORITY

To:

LENZ WILLIAM J.

NEAL, GERBER & EISENBERG LLP TWO NORTH LASALLE STREET SUITE 1700 CHICAGO IL 60602 USA

RECEIVED

JUN 17 2010

PCT

NOTIFICATION OF TRANSMITTAL OF THE INTERNATIONAL SEARCH REPORT AND THE WRITTEN OPINION OF THE INTERNATIONAL SEARCHING AUTHORITY, OR THE DECLARATION

(PCT Rule 44.1)

	Date of mailing *(day/month/year)* 04 JUNE 2010 (04.06.2010)
Applicant's or agent's file reference 36400.126WO1 DOCKET	**FOR FURTHER ACTION** See paragraphs 1 and 4 below
International application No. **PCT/US2009/061929**	International filing date *(day/month/year)* **23 OCTOBER 2009 (23.10.2009)**
Applicant **HYDRO-GEAR LIMITED PARTNERSHIP et al**	

1. ☒ The applicant is hereby notified that the international search report and the written opinion of the International Searching Authority have been established and are transmitted herewith.
Filing of amendments and statement under Article 19:
The applicant is entitled, if he so wishes, to amend the claims of the international application (see Rule 46).
When? The time limit for filing such amendments is normally two months from the date of transmittal of the international search report.
Where? Directly to the International Bureau of WIPO, 34 chemin des Colombettes 1211 Geneva 20, Switzerland, Facsimile No.: +41 22 338 82 70
For more detailed instructions, see the notes on the accompanying sheet.

RECEIVED DOCKET JUN 23 2010 NEAL, GERBER & EISENBERG

2. ☐ The applicant is hereby notified that no international search report will be established and that the declaration under Article 17(2)(a) to that effect and the written opinion of the International Searching Authority are transmitted herewith.

3. ☐ **With regard to any protest** against payment of (an) additional fee(s) under Rule 40.2, the applicant is notified that:
☐ the protest together with the decision thereon has been transmitted to the International Bureau together with the applicant's request to forward the texts of both the protest and the decision thereon to the designated Offices.
☐ no decision has been made yet on the protest; the applicant will be notified as soon as a decision is made.

4. **Reminders**
Shortly after the expiration of **18 months** from the priority date, the international application will be published by the International Bureau. If the applicant wishes to avoid or postpone publication, a notice of withdrawal of the international application, or of the priority claim, must reach the International Bureau as provided in Rules 90*bis*.1 and 90*bis*.3, respectively, before the completion of the technical preparations for international publication.

The applicant may submit comments on an informal basis on the written opinion of the International Searching Authority to the International Bureau. The International Bureau will send a copy of such comments to all designated Offices unless an international preliminary examination report has been or is to be established. These comments would also be made available to the public but not before the expiration of 30 months from the priority date.

Within **19 months** from the priority date, but only in respect of some designated Offices, a demand for international preliminary examination must be filed if the applicant wishes to postpone the entry into the national phase **until 30 months** from the priority date (in some Offices even later); otherwise, the applicant must, **within 20 months** from the priority date, perform the prescribed acts for entry into the national phase before those designated Offices.

In respect of other designated Offices, the time limit of **30 months** (or later) will apply even if no demand is filed within 19 months.

See the Annex to Form PCT/IB/301 and, for details about the applicable time limits, Office by Office, see the *PCT Applicant's Guide*, National Chapters.

Name and mailing address of the ISA/KR Korean Intellectual Property Office Government Complex-Daejeon, 139 Seonsa-ro, Seo-gu, Daejeon 302-701, Republic of Korea Facsimile No. 82-42-472-7140	Authorized officer COMMISSIONER Telephone No. 82-42-481-5281

NOTES TO FORM PCT/ISA/220

These Notes are intended to give the basic instructions concerning the filing of amendments under Article 19. The Notes are based on the requirements of the Patent Cooperation Treaty, the Regulations and the Administrative Instructions under that Treaty. In case of discrepancy between these Notes and those requirements, the latter are applicable. For more detailed information, see also the *PCT Applicant's Guide*.

In these Notes, "Article", "Rule" and "Section" refer to the provisions of the PCT, the PCT Regulations and the PCT Administrative Instructions, respectively.

INSTRUCTIONS CONCERNING AMENDMENTS UNDER ARTICLE 19

The applicant has, after having received the international search report and the written opinion of the International Searching Authority, one opportunity to amend the claims of the international application. It should however be emphasized that, since all parts of the international application (claims, description and drawings) may be amended during the international preliminary examination procedure, there is usually no need to file amendments of the claims under Article 19 except where, e.g. the applicant wants the latter to be published for the purposes of provisional protection or has another reason for amending the claims before international publication. Furthermore, it should be emphasized that provisional protection is available in some States only (see *PCT Applicant's Guide*, Annex B).

The attention of the applicant is drawn to the fact that ammendments to the claims under Article 19 are not allowed where the International Searching Authority has declared, under Article 17(2), that no international search report would be established (see *PCT Applicant's Guide*, paragraph 296).

What parts of the international application may be amended ?

Under Article 19, only the claims may be amended.

During the international phase, the claims may also be amended (or further amended) under Article 34 before the International Preliminary Examining Authority. The description and drawings may only be amended under Article 34 before the International Preliminary Examining Authority.

Upon entry into the national phase, all parts of the international application may be amended under Article 28 or, where applicable, Article 41.

When ? Within 2 months from the date of transmittal of the international search report or 16 months from the priority date, whichever time limit expires later. It should be noted, however, that the amendments will be considered as having been received on time if they are received by the International Bureau after the expiration of the applicable time limit but before the completion of the technical preparations for international publication (Rule 46.1).

Where not to file the amendments ?

The amendments may only be filed with the International Bureau and not with the receiving Office or the International Searching Authority (Rule 46.2).

Where a demand for international preliminary examination has been/is filed, see below.

How ? Either by cancelling one or more entire claims, by adding one or more new claims or by amending the text of one or more of the claims as filed.

A replacement sheet or sheets containing a complete set of claims in replacement of all the claims previously filed must be submitted.
Where a claim is cancelled, no renumbering of the other claims is required. In all cases where claims are renumbered, they must be renumbered consecutively .in Arabic numerals (Section 205(a)).

The amendments must be made in the language in which the international application is to be published.

What documents must/may accompany the amendments ?

Letter (Section 205(b)):
The amendments must be submitted with a letter.
The letter will not be published with the international application and the amended claims. It should not be confused with the "Statement under Article 19(1)" (see below,under "Statement under Article 19(1)").
The letter must be in English or French, at the choice of the applicant. However, if the language of the international application is English, the letter must be in English; if the language of the international application is French, the letter must be in French.

NOTES TO FORM PCT/ISA/220 (continued)

The letter must indicate the differences between the claims as filed and the claims as amended. It must, in particular, indicate, in connection with each claim appearing in the international application (it being understood that identical indications concerning several claims may be grouped), whether

(i) the claim is unchanged;
(ii) the claim is cancelled;
(iii) the claim is new;
(iv) the claim replaces one or more claims as filed;
(v) the claim is the result of the division of a claim as filed.

The following examples illustrate the manner in which amendments must be explained in the accompanying letter:

1. [Where originally there were 48 claims and after amendment of some claims there are 51]:
   "Claims 1 to 29, 31, 32, 34, 35, 37 to 48 replaced by amended claims bearing the same numbers; claims 30, 33 and 36 unchanged; new claims 49 to 51 added."
2. [Where originally there were 15 claims and after amendment of all claims there are 11]:
   "Claims 1 to 15 replaced by amended claims 1 to 11."
3. [Where originally there were 14 claims and the amendments consist in cancelling some claims and in adding new claims]:
   "Claims 1 to 6 and 14 unchanged; claims 7 to 13 cancelled; new claims 15, 16 and 17 added." or
   "Claims 7 to 13 cancelled; new claims 15, 16 and 17 added; all other claims unchanged."
4. [Where various kinds of amendments are made]:
   "Claims 1 - 10 unchanged; claims 11 to 13, 18 and 19 cancelled; claims 14, 15 and 16 replaced by amended claim 14; claim 17 subdivided into amended claims 15, 16 and 17; new claims 20 and 21 added."

"Statement under Article 19(1)" (Rule 46.4)

The amendments may be accompanied by a statement explaining the amendments and indicating any impact that such amendments might have on the description and the drawings (which cannot be amended under Article 19(1)).

The statement will be published with the international application and the amended claims.

It must be in the language in which the international application is to be published.

It must be brief, not exceeding 500 words if in English or if translated into English.

It should not be confused with and does not replace the letter indicating the differences between the claims as filed and as amended. It must be filed on a separate sheet and must be indentified as such by a heading, preferably by using the words "Statement under Article 19(1)."

It may not contain any disparaging comments on the international search report or the relevance of citations contained in that report. Reference to citations, relevant to a given claim, contained in the international search report may be made only in connection with an amendment of that claim.

Consequence if a demand for international preliminary examination has already been filed

If, at the time of filing any amendments and any accompanying statement, under Article 19, a demand for international preliminary examination has already been submitted, the applicant must preferably, at the time of filing the amendments (and any statement) with the International Bureau, also file with the International Preliminary Examining Authority a copy of such amendments (and of any statement) and, where required, a translation of such amendments for the proceduer before that Authority (see Rules 55.3(a) and 62.2, first sentence). For further information, see the Notes to the demand form (PCT/IPEA/401).

If a demand for international preliminary examination is made, the written opinion of the International Searching Authority will, except in certain cases where the International Preliminary Examining Authority did not act as International Searching Authority and where it has notified the International Bureau under Rule 66.1*bis*(b), be considered to be a written opinion of the International Preliminary Examining Authority. If a demand is made, the applicant may submit to the International Preliminary Examining Authority a reply to the written opinion together, where appropriate, with amendments before the expiration of 3 months from the date of mailing of Form PCT/ISA/220 or before the expiration of 22 months from the priority date, whichever expires later (Rule 43*bis*.1(c)).

Consequence with regard to translation of the international application for entry into the national phase

The applicant's attention is drawn to the fact that, upon entry into the national phase, a translation of the claims as amended under Article 19 may have to be furnished to the designated/elected Offices, instead of, or in addition to , the translation of the claims as filed.

For further details on the requirements of each designated/elected Office, see the *PCT Applicant's Guide*, National Chapters.

* Attention

Copies of the documents cited in the international search report can be searched in the following Korean Intellectual Property Office English website for three months from the date of mailing of the international search report.

http://www.kipo.go.kr/en/ => Patent Search => PCT-Service

ID : PCT international application number
PW : **2E6Y8RFU**

Inquiries related to PCT International Search Report or Written Opinion prepared by KIPO as an International Searching Authority can be answered not only by KIPO but also through IPKC (Intellectual Property Korea Center), located in Vienna, VA, which functions as a PCT Help Desk for PCT applicants.

Homepage: http://www.ipkcenter.com
Email: ipkc@ipkcenter.com
Phone: +1 703 388 1066
Fax: +1 703 388 1084

PATENT COOPERATION TREATY

PCT

INTERNATIONAL SEARCH REPORT

(PCT Article 18 and Rules 43 and 44)

Applicant's or agent's file reference 36400.126WO1	**FOR FURTHER ACTION**	see Form PCT/ISA/220 as well as, where applicable, item 5 below.
International application No. **PCT/US2009/061929**	International filing date *(day/month/year)* **23 OCTOBER 2009 (23.10.2009)**	(Earliest) Priority Date *(day/month/year)* 23 OCTOBER 2008 (23.10.2008)
Applicant **HYDRO-GEAR LIMITED PARTNERSHIP et al**		

This International search report has been prepared by this International Searching Authority and is transmitted to the applicant according to Article 18. A copy is being transmitted to the International Bureau.

This international search report consists of a total of 3 sheets.

☒ It is also accompanied by a copy of each prior art document cited in this report.

1. **Basis of the report**
   a. With regard to the **language**, the international search was carried out on the basis of:
      ☒ the international application in the language in which it was filed
      ☐ a translation of the international application into _____, which is the language of a translation furnished for the purposes of international search (Rules 12.3(a) and 23.1(b))
   b. ☐ This international search report has been established taking into account the **rectification of an obvious mistake** authorized by or notified to this Authority under Rule 91 (Rule 43.6*bis*(a)).
   c. ☐ With regard to any **nucleotide and/or amino acid sequence** disclosed in the international application, see Box No. I.
2. ☐ **Certain claims were found unsearchable** (See Box No. II)
3. ☐ **Unity of invention is lacking** (See Box No. III)
4. With regard to the **title,**
   ☒ the text is approved as submitted by the applicant.
   ☐ the text has been established by this Authority to read as follows:
5. With regard to the **abstract,**
   ☒ the text is approved as submitted by the applicant.
   ☐ the text has been established, according to Rule 38.2, by this Authority as it appears in Box No. IV. The applicant may, within one month from the date of mailing of this international search report, submit comments to this Authority.
6. With regard to the drawings,
   a. the figure of the **drawings** to be published with the abstract is Figure No. 6
      ☒ as suggested by the applicant.
      ☐ as selected by this Authority, because the applicant failed to suggest a figure.
      ☐ as selected by this Authority, because this figure better characterizes the invention.
   b. ☐ none of the figure is to be published with the abstract.

INTERNATIONAL SEARCH REPORT

International application No.
PCT/US2009/061929

A. CLASSIFICATION OF SUBJECT MATTER

B60K 17/28(2006.01)i, B60K 1/00(2006.01)i, B60L 15/20(2006.01)i

According to International Patent Classification (IPC) or to both national classification and IPC

B. FIELDS SEARCHED

Minimum documentation searched (classification system followed by classification symbols)

B60K 17/28; B60K 41/00; B60K 41/20; B60K 6/02; B60K 6/04; B60L 11/18; B60L 15/20; B62D 11/04; F16H 61/16; H02P 5/46

Documentation searched other than minimum documentation to the extent that such documents are included in the fields searched

Korean utility models and applications for utility models
Japanese utility models and applications for utility models

Electronic data base consulted during the international search (name of data base and, where practicable, search terms used)

eKOMPASS(KIPO internal) & Keywords: electric, vehicle, traction, control

C. DOCUMENTS CONSIDERED TO BE RELEVANT

Category*	Citation of document, with indication, where appropriate, of the relevant passages	Relevant to claim No.
A	JP 2007-037366 A (HONDA MOTOR CO LTD) 08 February 2007 See full documents	1-34
A	US 2004-0160201 A1 (KHWAJA M. RAHMAN et al.) 19 August 2004 See Figure 2 and related description	1-34
A	JP 2003-291692 A (HONDA MOTOR CO LTD) 15 October 2003 See full documents	1-34
A	JP 2001-320807 A (TOYOTA MOTOR CORP) 16 November 2001 See Figures 1-5 and related descriptions	1-34
A	JP 2004-100718 A (NISSAN MOTOR CO LTD) 02 April 2004 See full documents	1-34

☐ Further documents are listed in the continuation of Box C.

☒ See patent family annex.

* Special categories of cited documents:
"A" document defining the general state of the art which is not considered to be of particular relevance
"E" earlier application or patent but published on or after the international filing date
"L" document which may throw doubts on priority claim(s) or which is cited to establish the publication date of citation or other special reason (as specified)
"O" document referring to an oral disclosure, use, exhibition or other means
"P" document published prior to the international filing date but later than the priority date claimed

"T" later document published after the international filing date or priority date and not in conflict with the application but cited to understand the principle or theory underlying the invention
"X" document of particular relevance; the claimed invention cannot be considered novel or cannot be considered to involve an inventive step when the document is taken alone
"Y" document of particular relevance; the claimed invention cannot be considered to involve an inventive step when the document is combined with one or more other such documents,such combination being obvious to a person skilled in the art
"&" document member of the same patent family

Date of the actual completion of the international search	Date of mailing of the international search report
04 JUNE 2010 (04.06.2010)	**04 JUNE 2010 (04.06.2010)**

Name and mailing address of the ISA/KR	Authorized officer
Korean Intellectual Property Office Government Complex-Daejeon, 139 Seonsa-ro, Seo-gu, Daejeon 302-701, Republic of Korea Facsimile No. 82-42-472-7140	JEONG JI Deok Telephone No. 82-42-481-8420

INTERNATIONAL SEARCH REPORT
Information on patent family members

International application No.
PCT/US2009/061929

Patent document cited in search report	Publication date	Patent family member(s)	Publication date
JP 2007-037366 A	08.02.2007	None	
US 2004-0160201 A1	19.08.2004	DE 102004006023 A1	09.09.2004
		JP 2004-248495 A	02.09.2004
		US 6864646 B2	08.03.2005
JP 2003-291692 A	15.10.2003	JP 3803601 B2	02.08.2006
JP 2001-320807 A	16.11.2001	EP 1151892 A2	07.11.2001
		EP 1151892 A3	02.07.2003
		JP 03-381708 B2	20.12.2002
		JP 3381708 B2	04.03.2003
		US 2001-0041952 A1	15.11.2001
		US 6522960 B2	18.02.2003
JP 2004-100718 A	02.04.2004	CN 1299940 C	14.02.2007
		CN 1299940 C0	14.02.2007
		CN 1496888 A	19.05.2004
		CN 1496888 A	19.05.2004
		CN 1496888 C0	14.02.2007
		EP 1393964 A2	03.03.2004
		EP 1393964 A3	26.07.2006
		JP 03-552710 B2	11.08.2004
		JP 2004-100718 A	02.04.2004
		KR 10-0549477 B1	08.02.2006
		KR20040021547A	10.03.2004
		KR20040021547A	10.03.2004
		US 2004-0044458 A1	04.03.2004
		US 2004-044458 A1	04.03.2004
		US 7532968 B2	12.05.2009

PATENT COOPERATION TREATY

From the
INTERNATIONAL SEARCHING AUTHORITY

To:
LENZ WILLIAM J.

NEAL, GERBER & EISENBERG LLP TWO NORTH
LASALLE STREET SUITE 1700 CHICAGO IL 60602 USA

PCT

WRITTEN OPINION OF THE INTERNATIONAL SEARCHING AUTHORITY

(PCT Rule 43bis.1)

Date of mailing *(day/month/year)* **04 JUNE 2010 (04.06.2010)**

Applicant's or agent's file reference
36400.126WO1

FOR FURTHER ACTION
See paragraph 2 below

International application No.	International filing date *(day/month/year)*	Priority date *(day/month/year)*
PCT/US2009/061929	**23 OCTOBER 2009 (23.10.2009)**	23 OCTOBER 2008 (23.10.2008)

International Patent Classification (IPC) or both national classification and IPC

B60K 17/28(2006.01)i, B60K 1/00(2006.01)i, B60L 15/20(2006.01)i

Applicant

HYDRO-GEAR LIMITED PARTNERSHIP et al

1. This opinion contains indications relating to the following items:

- [x] Box No. I Basis of the opinion
- [ ] Box No. II Priority
- [ ] Box No. III Non-establishment of opinion with regard to novelty, inventive step and industrial applicability
- [ ] Box No. IV Lack of unity of invention
- [x] Box No. V Reasoned statement under Rule 43bis.1(a)(i) with regard to novelty, inventive step or industrial applicability; citations and explanations supporting such statement
- [ ] Box No. VI Certain documents cited
- [ ] Box No. VII Certain defects in the international application
- [ ] Box No. VIII Certain observations on the international application

RECEIVED
DOCKET
JUN 23 2010
NEAL, GERBER & EISENBERG

2. **FURTHER ACTION**
If a demand for international preliminary examination is made, this opinion will be considered to be a written opinion of the International Preliminary Examining Authority ("IPEA") except that this does not apply where the applicant chooses an Authority other than this one to be the IPEA and the chosen IPEA has notified the International Bureau under Rule 66.1bis(b) that written opinions of this International Searching Authority will not be so considered.

If this opinion is, as provided above, considered to be a written opinion of the IPEA, the applicant is invited to submit to the IPEA a written reply together, where appropriate, with amendments, before the expiration of 3 months from the date of mailing of Form PCT/ISA/220 or before the expiration of 22 months from the priority date, whichever expires later.
For further options, see Form PCT/ISA/220.

3. For further details, see notes to Form PCT/ISA/220.

Name and mailing address of the ISA/KR	Date of completion of this opinion	Authorized officer
Korean Intellectual Property Office Government Complex-Daejeon, 139 Seonsa-ro, Seo-gu, Daejeon 302-701, Republic of Korea Facsimile No. 82-42-472-7140	04 JUNE 2010 (04.06.2010)	JEONG JI Deok Telephone No.82-42-481-8420

WRITTEN OPINION OF THE INTERNATIONAL SEARCHING AUTHORITY

International application No.
PCT/US2009/061929

Box No. I Basis of this opinion

1. With regard to the **language**, this opinion has been established on the basis of :

   ☒ the international application in the language in which it was filed

   ☐ a translation of the international application into _____ , which is the language of a translation furnished for the purposes of international search (Rules 12.3(a) and 23.1(b))

2. ☐ This opinion has been established taking into account the **rectification of an obvious mistake** authorized by or notified to this Authority under Rule 91 (Rule 43*bis*.1(a))

3. With regard to any **nucleotide and/or amino acid sequence** disclosed in the international application, this opinion has been established on the basis of:

   a. a sequence listing filed or furnished
   ☐ on paper
   ☐ in electronic form

   b. time of filing or furnishing
   ☐ contained in the international application as filed.
   ☐ filed together with the international application in electronic form.
   ☐ furnished subsequently to this Authority for the purposes of search.

4. ☐ In addition, in the case that more than one version or copy of a sequence listing has been filed or furnished, the required statements that the information in the subsequent or additioanl copies is identical to that in the application as filed or does not go beyond the application as filed, as appropriate, were furnished.

5. Additional comments:

WRITTEN OPINION OF THE INTERNATIONAL SEARCHING AUTHORITY

International application No.
PCT/US2009/061929

Box No. V Reasoned statement under Rule 43bis.1(a)(i) with regard to novelty, inventive step or industrial applicability; citations and explanations supporting such statement

1. Statement

Novelty (N)	Claims	1-34	YES
	Claims	NONE	NO
Inventive step (IS)	Claims	1-34	YES
	Claims	NONE	NO
Industrial applicability (IA)	Claims	1-34	YES
	Claims	NONE	NO

2. Citations and explanations :

Reference is made to the following documents:

D1: JP 2007-037366 A (HONDA MOTOR CO LTD) 08 February 2007
D2: US 2004-0160201 A1 (KHWAJA M. RAHMAN et al.) 19 August 2004
D3: JP 2003-291692 A (HONDA MOTOR CO LTD) 15 October 2003
D4: JP 2001-320807 A (TOYOTA MOTOR CORP) 16 November 2001
D5: JP 2004-100718 A (NISSAN MOTOR CO LTD) 02 April 2004

1. Novelty and Inventive Step

1.1 Independent Claims 1 and 18

The subject matters of claims 1 and 18 differ from these prior art documents in that they include the traction system with auxiliary controller for traction. And it is not obvious to a person skilled in the art by the documents, taken alone or in combination. Therefore, claims 1 and 18 meet the requirements of PCT Article 33(2) and (3) with respect to novelty and inventive step.

1.2 Dependent Claims 2-17 and 19-29

Claims 2-17 and 19-29 are dependent on claim 1 and 18 respectively, and therefore meet the requirements of PCT Article 33(2) and (3).

1.3 Independent Claims 30, 32 and 34

The subject matters of claims 30, 32 and 34 differ from these prior art documents in that they include detail features of traction controller. And it is not obvious to a person skilled in the art by the documents, taken alone or in combination. Therefore, claims 30, 32 and 34 meet the requirements of PCT Article 33(2) and (3) with respect to novelty and inventive step.

1.4 Dependent Claims 31 and 33

Claims 31 and 33 are dependent on claim 30 and 32 respectively, and therefore meet the requirements of PCT Article 33(2) and (3).

2. Industrial Applicability

Claims 1-34 are industrially applicable under PCT Article 33(4).

UNITED STATES PATENT AND TRADEMARK OFFICE

UNITED STATES DEPARTMENT OF COMMERCE
United States Patent and Trademark Office
Address: COMMISSIONER FOR PATENTS
P.O. Box 1450
Alexandria, Virginia 22313-1450
www.uspto.gov

APPLICATION NO.	FILING DATE	FIRST NAMED INVENTOR	ATTORNEY DOCKET NO.	CONFIRMATION NO.
12/605,226	10/23/2009	Christopher K. Wyatt	36400.126US3	1235

25541 7590 10/15/2010
PATENT ADMINISTRATOR
NEAL, GERBER, & EISENBERG
SUITE 1700
2 NORTH LASALLE STREET
CHICAGO, IL 60602

EXAMINER
ZANELLI, MICHAEL J

ART UNIT	PAPER NUMBER
3661	

NOTIFICATION DATE	DELIVERY MODE
10/15/2010	ELECTRONIC

Please find below and/or attached an Office communication concerning this application or proceeding.

The time period for reply, if any, is set in the attached communication.

Notice of the Office communication was sent electronically on above-indicated "Notification Date" to the following e-mail address(es):

patents@ngelaw.com

UNITED STATES PATENT AND TRADEMARK OFFICE

Commissioner for Patents
United States Patent and Trademark Office
P.O. Box 1450
Alexandria, VA 22313-1450
www.uspto.gov

OCT 14 2010

PATENT ADMINISTRATOR
NEAL, GERBER, & EISENBERG
SUITE 1700
2 NORTH LASALLE STREET
CHICAGO IL 60602

In re application of Wyatt et al. Application No. 12/605,226 Filed: October 23, 2009 For: CONTROL SYSTEMS AND METHODS FOR ELECTRIC MOTORS OF UTILITY VEHICLES	**DECISION ON REQUEST TO PARTICIPATE IN PATENT PROSECUTION HIGHWAY PROGRAM AND PETITION TO MAKE SPECIAL UNDER 37 CFR 1.102(d)**

This is a decision on the request to participate in the Patent Prosecution Highway (PPH) program and the petition under 37 CFR 1.102(d), filed September 03, 2010, to make the above-identified application special.

The request and petition are **GRANTED**.

A grantable request to participate in the PPH program and petition to make special require:

(1) The U.S. application must disclose an eligible relationship to one or more PCT applications filed in the KIPO, EPO or USPTO;
(2) Applicant must submit a copy of the allowable/patentable claim(s) from the PCT application(s) latest international work product (the written opinion or the IPER) along with an English translation thereof and a statement that the English translation is accurate;
(3) All the claims in the U.S. application must sufficiently correspond or be amended to sufficiently correspond to the allowable/patentable claim(s) in the PCT application(s);
(4) Examination of the U.S. application has not begun;
(5) Applicant must submit a copy of the latest international work product from the PCT application containing the allowable/patentable claim(s) along with an English translation thereof and a statement that the English translation is accurate;
(6) Applicant must submit an IDS listing the documents cited by the PCT examiner in the international work product along with copies of documents except U.S. patents or U.S. patent application publications.

In light of the petition being properly submitted via EFS-Web as is required, the request to participate in the PPH program complies with the above requirements, the above-identified application has been accorded "special" status.

All other inquiries concerning the examination or status of the application should be directed to the Patent Application Information Retrieval (PAIR) system.

The application is being forwarded to the examiner for action on the merits commensurate with this decision as soon as any pre-exam processing has been completed.

Any inquiry regarding this decision should be directed to Mikado Buiz, Quality Assurance Specialist, at (571) 272-6578.

/ Mikado Buiz /

Mikado Buiz,
Quality Assurance Specialist
Technology Center 3600

MB/MB: 10/13/10

UNITED STATES PATENT AND TRADEMARK OFFICE

Commissioner for Patents
United States Patent and Trademark Office
P.O. Box 1450
Alexandria, VA 22313-1450
www.uspto.gov

BULLIVANT HOUSER BAILEY PC
1415 L STREET
SUITE 1000
SACRAMENTO, CA 95814

MAILED

MAR 03 2011

OFFICE OF PETITIONS

In re Application of	:	
Michael J. Powaser	:	
Application No. 12/605,234	:	DECISION ON PETITION
Filed: October 23, 2009	:	TO WITHDRAW
Attorney Docket No. 31497/00002	:	FROM RECORD
	:	

This is a decision on the Request to Withdraw as attorney or agent of record under 37 C.F.R. § 1.36(b), filed January 26, 2011.

The request is **APPROVED**.

The request was signed by Carl J. Schwedler on behalf of the practitioners of record associated with Customer Number 70130.

Applicant is reminded that there is no attorney of record at this time.

All future correspondence will be directed to inventor Michael J. Powaser at the address indicated below.

Telephone inquiries concerning this decision should be directed to Irvin Dingle at (571) 272-3210.

Irvin Dingle
Petitions Examiner
Office of Petitions

cc: Michael J. Powaser
441 South Ham Lane, Suite B
Lodi, CA 95242

UNITED STATES PATENT AND TRADEMARK OFFICE

UNITED STATES DEPARTMENT OF COMMERCE
United States Patent and Trademark Office
Address: COMMISSIONER FOR PATENTS
P.O. Box 1450
Alexandria, Virginia 22313-1450
www.uspto.gov

APPLICATION NUMBER	FILING OR 371(C) DATE	FIRST NAMED APPLICANT	ATTY. DOCKET NO./TITLE
12/605,234	10/23/2009	Michael J. Powaser	31497/00002

CONFIRMATION NO. 1262

POWER OF ATTORNEY NOTICE

70130
BULLIVANT HOUSER BAILEY PC
1415 L STREET
SUITE 1000
SACRAMENTO, CA 95814

Date Mailed: 03/03/2011

NOTICE REGARDING CHANGE OF POWER OF ATTORNEY

This is in response to the Power of Attorney filed 01/26/2011.

- The withdrawal as attorney in this application has been accepted. Future correspondence will be mailed to the new address of record. 37 CFR 1.33.

/idingle/

Office of Data Management, Application Assistance Unit (571) 272-4000, or (571) 272-4200, or 1-888-786-0101

UNITED STATES PATENT AND TRADEMARK OFFICE

UNITED STATES DEPARTMENT OF COMMERCE
United States Patent and Trademark Office
Address: COMMISSIONER FOR PATENTS
P.O. Box 1450
Alexandria, Virginia 22313-1450
www.uspto.gov

APPLICATION NUMBER	FILING OR 371(C) DATE	FIRST NAMED APPLICANT	ATTY. DOCKET NO./TITLE
12/605,234	10/23/2009	Michael J. Powaser	31497/00002

CONFIRMATION NO. 1262

POA ACCEPTANCE LETTER

Michael J. Powaser
441 South Ham Lane, Suite B
Lodi, CA 95242

OC000000046324086

Date Mailed: 03/03/2011

NOTICE OF ACCEPTANCE OF POWER OF ATTORNEY

This is in response to the Power of Attorney filed 01/26/2011.

The Power of Attorney in this application is accepted. Correspondence in this application will be mailed to the above address as provided by 37 CFR 1.33.

/idingle/

Office of Data Management, Application Assistance Unit (571) 272-4000, or (571) 272-4200, or 1-888-786-0101

Doc Code: PET.AUTO **Document Description: Petition automatically granted by EFS-Web**	PTO/SB/83 U.S. Patent and Trademark Office Department of Commerce

Electronic Petition Request	**REQUEST FOR WITHDRAWAL AS ATTORNEY OR AGENT AND CHANGE OF CORRESPONDENCE ADDRESS**
Application Number	12605289
Filing Date	23-Oct-2009
First Named Inventor	Eric Vandewater
Art Unit	2492
Examiner Name	ARAVIND MOORTHY
Attorney Docket Number	4443.0002
Title	System and Method of Controlling Access to Information Content Transmitted Over Communication Network

◉ Please withdraw me as attorney or agent for the above identified patent application and the practitioners of record associated with Customer Number: 84278

The reason(s) for this request are those described in 37 CFR:

10.40(c)(1)(iv)

Certifications

☒ I/We have given reasonable notice to the client, prior to the expiration of the response period, that the practitioner(s) intend to withdraw from employment

☒ I/We have delivered to the client or a duly authorized representative of the client all papers and property (including funds) to which the client is entitled

☒ I/We have notified the client of any responses that may be due and the time frame within which the client must respond

Change the correspondence address and direct all future correspondence to:
The address of the first named inventor or assignee that has properly made itself of record pursuant to 37 CFR 3.71, associated with Customer Number: 84278

I am authorized to sign on behalf of myself and all withdrawing practitioners.

Signature	/Robert D. Atkins/
Name	Robert D. Atkins
Registration Number	34288

UNITED STATES PATENT AND TRADEMARK OFFICE

Commissioner for Patents
United States Patent and Trademark Office
P.O. Box 1450
Alexandria, VA 22313-1450
www.uspto.gov

Decision Date : March 28, 2012

In re Application of :

Eric Vandewater

Application No : 12605289

Filed : 23-Oct-2009

Attorney Docket No : 4443.0002

DECISION ON REQUEST TO WITHDRAW AS ATTORNEY/AGENTOF RECORD

This is an electronic decision on the Request to Withdraw as attorney or agent of record under 37 CFR§ 1.36(b), filed March 28, 2012

The request is **APPROVED**

The request was signed by Robert D. Atkins (registration no. 34288) on behalf of all attorneys/agents associated with Customer Number 84278 . All attorneys/agents associated with Customer Number 84278 have been withdrawn.

Since there are no remaining attorneys of record, all future communications from the Office will be directed to the first named inventor or assignee that has properly made itself of record pursuant to 37 CFR 3.71, with Customer number 84278 .

As a reminder, requester is required to inform the first named inventor or assignee that has properly made itself of record pursuant to 37 CFR 3.71 of the electronically processed petition.

Telephone inquiries concerning this decision should be directed to the Patent Electronic Business Center (EBC) at 866-217-9197.

Office of Petitions

UNITED STATES PATENT AND TRADEMARK OFFICE

Commissioner for Patents
United States Patent and Trademark Office
P. O. Box 1450
Alexandria, VA 22313-1450
www.uspto.gov

MAILED

AUG 16 2010

OFFICE OF PETITIONS

BARCELO & HARRISON, LLP
2901 W COAST HWY, SUITE 200
NEWPORT BEACH, CA 92663

In re Application of :
Tommy Guess et al :
Application No. 12/605,339 : NOTICE
Filed: October 25, 2009 :
Attorney Docket No. TCOM0061

This is a notice regarding your request for acceptance of a fee deficiency submission under 37 CFR 1.28. On September 1, 1998, the Court of Appeals for the Federal Circuit held that 37 CFR 1.28(c) is the sole provision governing the time for correction of the erroneous payment of the issue fee as a small entity. **See DH Technology v. Synergystex International, Inc. 154 F.3d 1333, 47 USPQ2d 1865 (Fed. Cir. Sept. 1, 1998).**

The Office no longer investigates or rejects original or reissue applications under 37 CFR 1.56. **1098 Off. Gaz. Pat. Office 502 (January 3, 1989)**. Therefore, nothing in this Notice is intended to imply that an investigation was done.

Your fee deficiency submission under 37 CFR 1.28 is hereby **ACCEPTED**.

Telephone inquiries related to this communication should be directed to Irvin Dingle at (571) 272-3210.

Irvin Dingle
Petitions Examiner
Office of Petitions

UNITED STATES PATENT AND TRADEMARK OFFICE

Commissioner for Patents
United States Patent and Trademark Office
P.O. Box 1450
Alexandria, VA 22313-1450
www.uspto.gov

BANOWSKY &LEVINE, P.C
12001 N. CENTRAL EXPRESSWAY
SUITE 790
DALLAS TX 75243

MAILED
JAN 3 1 2012
OFFICE OF PETITIONS

In re Application of	:	
Pradyumna V. Patel	:	
Application No. 12/605,363	:	DECISION ON PETITION
Filed: October 25, 2009	:	TO WITHDRAW
Attorney Docket No. 1388-08	:	FROM RECORD
	:	

This is a decision on the Request to Withdraw as attorney or agent of record under 37 C.F.R. § 1.36(b), filed January 11, 2012.

The request is **APPROVED**.

A grantable request to withdraw as attorney/agent of record must be signed by every attorney/agent seeking to withdraw or contain a clear indication that one attorney is signing on behalf of another/others. A request to withdraw will not be approved unless at least 30 (thirty) days would remain between the date of approval and the later of the expiration date of a time to file a response or the expiration date of the maximum time period which can be extended under 37 C.F.R. § 1.136(a).

The request was signed by Baxter W. Banowsky on behalf of all attorneys/agents associated with customer number 61400. All attorneys/agents associated with customer number 61400 have been withdrawn.

Applicant is reminded that there is no attorney of record at this time.

The correspondence address has been changed and is copied below.

Telephone inquiries concerning this decision should be directed to Kimberly Inabinet at 571-272-4618.

/Kimberly Inabinet/

Kimberly Inabinet
Petitions Examiner
Office of Petitions

cc: Pradyumna V. Patel
1359 Flamingo Circle
Southlake, TX 76092

UNITED STATES PATENT AND TRADEMARK OFFICE

UNITED STATES DEPARTMENT OF COMMERCE
United States Patent and Trademark Office
Address: COMMISSIONER FOR PATENTS
P.O. Box 1450
Alexandria, Virginia 22313-1450
www.uspto.gov

APPLICATION NUMBER	FILING OR 371(C) DATE	FIRST NAMED APPLICANT	ATTY. DOCKET NO./TITLE
12/605,363	10/25/2009	Pradyumna V. Patel	.1388-08

CONFIRMATION NO. 1650

POWER OF ATTORNEY NOTICE

61400
BANOWSKY &LEVINE, P.C
12001 N. CENTRAL EXPRESSWAY
SUITE 790
DALLAS, TX 75243

OC000000052311161

Date Mailed: 01/31/2012

NOTICE REGARDING CHANGE OF POWER OF ATTORNEY

This is in response to the Power of Attorney filed 01/11/2012.

- The withdrawal as attorney in this application has been accepted. Future correspondence will be mailed to the new address of record. 37 CFR 1.33.

/kainabinet/

Office of Data Management, Application Assistance Unit (571) 272-4000, or (571) 272-4200, or 1-888-786-0101

UNITED STATES PATENT AND TRADEMARK OFFICE

Commissioner for Patents
United States Patent and Trademark Office
P.O. Box 1450
Alexandria, VA 22313-1450
www.uspto.gov

MAILED

MAY 17 2011

NORTH AMERICA INTELLECTUAL PROPERTY CORPORATION
P.O. BOX 506
MERRIFIELD, VA 22116

In re Application of Wen-Tai Chang et al.	:	
Appl. No.: 12/605,377	:	DECISION ON PETITION
Filed: October 26, 2009	:	UNDER 37 C.F.R. § 1.59
Attorney Docket No.: NAUP0961USA	:	
For: METHOD OF FABRICATING CMOS	:	
TRANSISTOR	:	

This is a response to the petition under 37 CFR 1.59(b), filed April 4, 2011, to expunge information from the above identified application.

The decision on the petition will be held in abeyance until allowance of the application or mailing of an *Ex parte* Quayle action or a Notice of Abandonment, at which time the petition will be decided.

Petitioner asserts that 4 (four) invention disclosure documents submitted in a first Supplementary Information Disclosure Statement, filed April 4, 2011, in accordance with MPEP § 724.02 is trade secret material, and requests that it be expunged from the record. Petitioner states that the information is trade secret material of the assignee that has not been made public and is being submitted by the applicant and commits to retain the document for the period of any patent that is issued from the above application. The petition fee set forth in 37 CFR 1.17(g) has been paid.

The decision on the petition is held in abeyance because prosecution on the merits has not completed. Accordingly, it is not appropriate to make a final determination of whether or not the material requested to be expunged is "material," with "materiality" being defined as any information which the examiner considers as being important to a determination of patentability of the claims. Thus, the decision on the petition to expunge must be held in abeyance at this time.

During prosecution on the merits, the examiner will determine whether or not the identified document is considered to be "material." If the information is not considered by the examiner to be material, the information will be removed from the official file.

Any inquiry regarding this decision should be directed to Hien H. Phan, Quality Assurance Specialist, at (571) 272-1606.

John W. Cabeca, TC Director
Technology Center 2800
Semiconductors, Electrical and Optical
Systems and Components

UNITED STATES PATENT AND TRADEMARK OFFICE

Commissioner for Patents
United States Patent and Trademark Office
P.O. Box 1450
Alexandria, VA 22313-1450
www.uspto.gov

DR. GEORGE DACAI LIU
1029 BRASSINGTON DRIVE
COLLEGEVILLE, PA 19426

MAILED
MAY 17 2011
OFFICE OF PETITIONS

In re Application of	:	
Daochun KONG	:	
Application No. 12/605,389	:	DECISION ON PETITION
Filed: October 26, 2009	:	UNDER 37 CFR 1.137(b)
Attorney Docket No. **Kong.P001US**	:	

This is a decision on the petition under the unintentional provisions of 37 CFR 1.137(b), filed December 3, 2010, to revive the above-identified application.

The petition is **GRANTED**.

The application became abandoned for failure to reply in a timely manner to the Notice to File Corrected Application Papers (Notice), mailed November 17, 2009. The Notice set a period for reply of two (2) months from the mail date of the Notice. No extensions of time under the provisions of 37 CFR 1.136(a) were obtained. Accordingly, the application became abandoned on January 18, 2010.

The petition satisfies the requirements of 37 CFR 1.137(b) in that petitioner has supplied (1) the reply in the form of a replacement drawings, Sequence Listing with CRF Listing, (2) the petition fee of $810; and (3) an adequate statement of unintentional delay.

Telephone inquiries concerning this decision should be directed to Monica A. Graves at (571) 272-7253.

This application is being referred to the Office of Patent Application Processing for appropriate action on the reply received.

Thurman K. Page
Petitions Examiner
Office of Petitions

UNITED STATES PATENT AND TRADEMARK OFFICE

Commissioner for Patents
United States Patent and Trademark Office
P.O. Box 1450
Alexandria, VA 22313-1450
www.uspto.gov

ORTIZ & LOPEZ, PLLC
P.O. BOX 4484
ALBUQUERQUE, NM 87196

MAILED

AUG 22 2011

OFFICE OF PETITIONS

In re Application of :
Shull et al. :
Application No. 12/605,464 : ON PETITION
Filed: October 26, 2009 :
Attorney Docket No. 1000-1575 DIV :

This is a decision on the petition under the unintentional provisions of 37 CFR 1.137(b), filed August 10, 2011, to revive the above-identified application.

The petition is **DISMISSED**.

This application became abandoned for failure to timely pay the issue and publication fees as well as replacement drawings on or before June 28, 2011, as required by the Notice of Allowability and the Notice of Allowance and Fee(s) Due mailed March 28, 2011. Accordingly, the application became abandoned on June 29, 2011. A Notice of Abandonment was mailed July 18, 2011.

Any request for reconsideration of this decision must be submitted within TWO (2) MONTHS from the mail date of this decision. No further petition fee is required for the request. Extensions of time under 37 CFR 1.136(a) are permitted. The reconsideration request should include a cover letter entitled "Renewed Petition under 37 CFR 1.137(b)." This is **not** a final agency action within the meaning of 5 U.S.C. § 704.

A grantable petition under 37 CFR 1.137(b) must be accompanied by: (1) the required reply, unless previously filed; (2) the petition fee as set forth in 37 CFR 1.17(m); (3) a statement that the entire delay in filing the required reply from the due date for the reply until the filing of a grantable petition pursuant to 37 CFR 1.137(b) was unintentional; and (4) any terminal disclaimer (and fee as set forth in 37 CFR 1.20(d)) required by 37 CFR 1.137(d). Where there is a question as to whether either the abandonment or the delay in filing a petition under 37 CFR 1.137 was unintentional, the Director may require additional information. See MPEP 711.03(c)(II)(C) and (D).

The petition lacks item (3) because it is unsigned and therefore is considered as not containing a proper statement of unintentional delay and cannot be accepted. It appears that the signature page of the petition was intended to be signed by Kermit Lopez, an attorney registered to practice before the U.S. Patent and Trademark Office.

Further correspondence with respect to this matter should be addressed as follows:

By Mail: Mail Stop PETITION
Commissioner for Patents
P. O. Box 1450
Alexandria, VA 22313-1450

By hand: U. S. Patent and Trademark Office
Customer Service Window, Mail Stop Petitions
Randolph Building
401 Dulany Street
Alexandria, VA 22314

The centralized facsimile number is **(571) 273-8300.**

Telephone inquiries concerning this decision should be directed to the undersigned at (571) 272-6059.

/A. Kelley-Collier/
Alicia Kelley-Collier
Petitions Examiner
Office of Petitions

UNITED STATES PATENT AND TRADEMARK OFFICE

Commissioner for Patents
United States Patent and Trademark Office
P.O. Box 1450
Alexandria, VA 22313-1450
www.uspto.gov

Ortiz & Lopez, PLLC
P.O. Box 4484
Albuquerque NM 87196

MAILED
SEP 26 2011
OFFICE OF PETITIONS

In re Application of :
Robert D. Shull et al. :
Application No. 12/605,464 :
Filed: October 26, 2009 :
Attorney Docket No. 1000-1575 DIV :

DECISION ON PETITION

This is a decision on the renewed petition under the unintentional provisions of 37 CFR 1.137(b), filed August 25, 2011, to revive the above-identified application.

The petition is **GRANTED**.

The application became abandoned for failure to submit formal drawings in a timely manner in reply to the Notice of Allowability, mailed March 28, 2011, which set a period for reply of three (3) months. Accordingly, this application became abandoned on June 29, 2011. A Notice of Abandonment was mailed on July 18, 2011.

The petition satisfies the requirements of 37 CFR 1.137(b) in that petitioner has supplied (1) the reply in the form of corrected drawings, (2) the petition fee of $1,620, (3) a proper statement of unintentional delay. Accordingly, the corrected drawings are accepted as being unintentionally delayed.

Telephone inquiries concerning this decision should be directed to Kimberly Inabinet at (571) 272-4618.

This application is being referred to the Office of Data Management for further processing into a patent.

/Kimberly A. Inabinet/

Kimberly A. Inabinet
Petitions Examiner
Office of Petitions

UNITED STATES PATENT AND TRADEMARK OFFICE

Commissioner for Patents
United States Patent and Trademark Office
P.O. Box 1450
Alexandria, VA 22313-1450
www.uspto.gov

MORRISON & FOERSTER, LLP
425 Market Street
San Francisco, CA 94105-2482

MAILED

MAY 1 8 2011

OFFICE OF PETITIONS

In re Application of	:	
Darell D. Bigner, et al.	:	
Application No. 12/605,491	:	DECISION ON PETITION
Filed: October 26, 2009	:	TO WITHDRAW
Attorney Docket No. 602662000701	:	FROM RECORD
	:	

This is a decision on the Request to Withdraw as attorney or agent of record under 37 C.F.R. § 1.36(b), filed April 5, 2011.

The request is **NOT APPROVED** because it is moot.

A review of the file record indicates that the power of attorney to Morrison & Foerster, LLP has been revoked by the assignee of the patent application on May 6, 2011. Accordingly, the request to withdraw under 37 C.F.R. § 1.36(b) is moot.

All future communications from the Office will continue to be directed to the below-listed address until otherwise notified by applicant.

Telephone inquires concerning this decision should be directed to Terri Johnson at 571-272-2991.

/Terri Johnson/
Terri Johnson
Petitions Examiner
Office of Petitions

cc: **BANNER & WITCOFF, LTD.**
1100 13th STREET, N.W.
SUITE 1200
WASHINGTON DC 20005-4051

UNITED STATES PATENT AND TRADEMARK OFFICE

UNITED STATES DEPARTMENT OF COMMERCE
United States Patent and Trademark Office
Address: COMMISSIONER FOR PATENTS
P.O. Box 1450
Alexandria, Virginia 22313-1450
www.uspto.gov

APPLICATION NO.	FILING DATE	FIRST NAMED INVENTOR	ATTORNEY DOCKET NO.	CONFIRMATION NO.
12/605,574	10/26/2009	Kenji FUJIHIRA	POL-7292	1080

7590 07/12/2011
MATTINGLY & MALUR, PC
1800 DIAGONAL ROAD
SUITE 370
ALEXANDRIA, VA 22314

EXAMINER
KOENIG, ANDREW Y

ART UNIT	PAPER NUMBER
2423	

MAIL DATE	DELIVERY MODE
07/12/2011	PAPER

DECISION GRANTING PETITION UNDER 37 CFR 1.138(d)

The declaration of express abandonment is recognized

This is in response to the petition under 37 CFR 1.138(d), requesting for a refund of any previously paid search fee and excess claims fee in the above-identified application.

The petition is granted.

The express abandonment is recognized. Any previously paid search fee and excess claims fee are hereby refunded.

Telephone inquiries should be directed to the Office of Data Management at (571) 272-4200.

Nimi James

Patent Publication Branch
Office of Data Management

FORM PET651G (Rev. 08/07)

UNITED STATES PATENT AND TRADEMARK OFFICE

Commissioner for Patents
United States Patent and Trademark Office
P.O. Box 1450
Alexandria, VA 22313-1450
www.uspto.gov

SHUTTLEWORTH & INGERSOLL, P.L.C.
115 3RD STREET SE, SUITE 500
P.O. BOX 2107
CEDAR RAPIDS IA 52406

MAILED
NOV 22 2011
OFFICE OF PETITIONS

In re Application of	:	
YaoKun Gui et al.	:	
Application No. 12/605,600	:	NOTICE
Filed: October 26, 2009	:	
Attorney Docket No. **17157-0015-1**	:	

This is a notice regarding your request filed October 17, 2011, and supplemented on November 17, 2011, for acceptance of a fee deficiency submission under 37 CFR 1.28.

The Office no longer investigates or rejects original or reissue applications under 37 CFR 1.56. **1098 Off. Gaz. Pat. Office 502 (January 3, 1989)**. Therefore, nothing in this Notice is intended to imply that an investigation was done.

Your fee deficiency submission under 37 CFR 1.28 is hereby **ACCEPTED**.

This application is no longer entitled to small entity status. Accordingly, all future fees paid in this application must be paid at the large entity rate.

Inquiries related to this communication should be directed to the undersigned at (571) 272-4584.

JoAnne Burke
Petitions Examiner
Office of Petitions

UNITED STATES PATENT AND TRADEMARK OFFICE

UNITED STATES DEPARTMENT OF COMMERCE
United States Patent and Trademark Office
Address: COMMISSIONER FOR PATENTS
P.O. Box 1450
Alexandria, Virginia 22313-1450
www.uspto.gov

APPLICATION NO.	FILING DATE	FIRST NAMED INVENTOR	ATTORNEY DOCKET NO.	CONFIRMATION NO.
12/605,609	10/26/2009	Rajat Basu	H0021187 (4520)	1150

91970 7590 01/31/2011
HONEYWELL/FOX ROTHSCHILD
Patent Services
101 Columbia Road
Morristown, NJ 07962

EXAMINER
HARDEE, JOHN R

ART UNIT	PAPER NUMBER
1761	

NOTIFICATION DATE	DELIVERY MODE
01/31/2011	ELECTRONIC

Please find below and/or attached an Office communication concerning this application or proceeding.

The time period for reply, if any, is set in the attached communication.

Notice of the Office communication was sent electronically on above-indicated "Notification Date" to the following e-mail address(es):

patentservices-us@honeywell.com
DL-SM-IP@Honeywell.com

UNITED STATES PATENT AND TRADEMARK OFFICE

Commissioner for Patents
United States Patent and Trademark Office
P.O. Box 1450
Alexandria, VA 22313-1450
www.uspto.gov

wk

Mailed : 1/31/2011

In re Application of
Basu, et al.
Serial No. 12/605,609
Filed: October 26, 2009
For: **AZEOTROPE-LIKE COMPOSITIONS COMPRISING 1-CHLORO-3,3,3-TRIFLUOROPROPENE**

DECISION ON PETITION

This is a decision on the PETITION filed on January 14, 2011 UNDER 37 CFR 1.181 petitioning Examiner's restriction of claims 1-28 and withdrawal of the Ex Parte Quayle Action mailed on September 27, 2010. Applicant proposes alternative groupings and consideration of these alternative groupings for a supplemental Restriction Requirement. Applicants also assert that the Ex Parte Quayle Action is improper because it requires removal of certain non-elected limitations of the claims. Applicants assert that the Examiner's proposed amendments to the claims are substantive in nature in that they affect the resulting claim scope. The Examiner denied this request and issued a Notice of Non-Compliant Amendment.

The Examiner initially determined that there were 19 separate inventions all classified in class 252, subclass 68 (compositions comprising methanol; ethanol; isopropanol; pentane, neopentane; hexane; isohexane; cyclopentene; 1-chloropropane; 2- chloropropane; 1,1,1,3,3-pentafluorobutane; trans-1,2-dichloroethylene; methyal; methyl acetate; compositions comprising methanol and trans-1,2-dichloroethylene; compositions comprising water; and compositions comprising nitromethane). Inventions 1-19 were directed to related compositions classified in class 252, subclass 68. The Examiner asserted that the inventions as claimed have a materially different design. The inventions as claimed do not encompass overlapping subject matter and there is nothing of record to show them to be obvious variants. The Examiner further asserted that azeotropic and near azeotropic compositions are separately patentable and that no restriction was being made between cis and trans-1-chloro-3,3,3-trifluoroporpene.

Applicant elected with traverse the group "compositions with methanol". Claims encompassing this invention would include claims 1 and 2. Applicant asserts that the Restriction Requirement seeks to restrict members of the Markush groups of the originally filed claims 1, 7, 17 and 22 to separate inventions. Applicants assert that 35 USC 121 does not provide the authority to restrict members of a Markush group into independent inventions.

A review of the claims shows that all 19 inventions were not provided in 19 separate claims of the application. The first three inventions have a common C_1-C_3 alcohol structure and were

provided together as a Markush group in claim 1. The fourth through tenth inventions have a common C_5-C_6 hydrocarbon structure and were provided together as a Markush group in claim 7. The eleventh through fourteenth inventions have a common halogenated hydrocarbon structure and were provided together as a Markush group in claim 17. The fifteenth and sixteenth inventions have a common methyl structure and were provided together as a Markush group in claim 22. Remaining claims 25-28 recite the remaining inventions without a Markush grouping.

In Applicants' response of May 21, 2010 of election with traverse, Applicants requested reconsideration of the Restriction Requirement based upon groupings of inventions based upon the Markush groups provided by the claims. The Examiner found this unpersuasive and stated that common structural features is not a criterion for grouping inventions together and that each invention is separately patentable and required different search queries.

The restriction requirement was made final and claims 2-28 were withdrawn. Claim 1 was rejected under non-statutory obviousness-type double patenting and claim 2 was indicated to be allowable if rewritten into independent form. Applicants submitted a terminal disclaimer and the Examiner issued an Ex parte Quayle. Claims 1 and 2 were argued to be objectionable for including non-elected subject matter, i.e. for reciting a Markush grouping containing alcohol other than methanol. The claims were said to be allowable if the non-elected limitations were removed. Applicants responded and argued that the Ex Parte Quayle Action was improper. The Action required removal of certain members of the Markush grouping from the claims which is clearly substantive in nature in that it would have resulted in significant change in claim scope. The Examiner issued a Notice of Non-compliant Amendment on December 14, 2010 stating the cancelling of non-elected subject matter was a formal requirement and because the restriction requirement was traversed, the Examiner could not delete the limitations through an Examiner's amendment.

DECISION

If the members of the Markush group are sufficiently few in number or so closely related that a search and examination of the entire claim can be made without serious burden, the Examiner must examine all the members of the Markush group in the claim on the merits, even though they may be directed to independent and distinct inventions. Since the decisions in *In re Weber*, 580 F.2d 455, 198 USPQ 328 (CCPA 1978) and *In re Haas,* 580 F.2d 461, 198 USPQ 334 (CCPA 1978), it is improper for the Office to refuse to examine that which applicants regard as their invention, unless the subject matter in a claim lacks unity of invention. *In re Harnisch*, 631 F.2d 716, 206 USPQ 300 (CCPA 1980); and *Ex parte Hozumi*, 3 USPQ2d 1059 (Bd. Pat. App. & Int. 1984). Broadly, unity of invention exists where compounds included within a Markush group (1) share a common utility, and (2) share a substantial structural feature essential to that utility. A Markush-type claim may include independent and distinct inventions. This is true where two or more of the members are so unrelated and diverse that a prior art reference anticipating the claim with respect to one of the members would not render the claim obvious under 35 U.S.C. 103 with respect to the other member(s).

In applications containing a Markush-type claim that encompasses at least two independent or distinct inventions, the Examiner may require a provisional election of a single species prior to examination on the merits. The Examiner's only two options when examining a Markush

grouping, is to examine every member of the group or require an election of species if the members are independent or distinct and a search of every member would be unduly burdensome. The Examiner did not exercise either of these options.

The petition is **GRANTED**.

The Examiner is directed to withdraw the restriction requirement that was originally presented and to also withdraw the Ex Parte Quayle request. Applicants, in the interest of furthering prosecution have proposed an alternative restriction which the Examiner can accept or present a new restriction or election of species that is proper under both 35 USC 121 and MPEP 803.02 which is consistent with U.S practice.

Applicants' proposed restriction:

Group I	compositions with a C1-C3 alcohol which relates to claims 1-6;
Group II	composition with a C5-C6 hydrocarbon which relates to claims 7-16;
Group III	composition with a halogenated hydrocarbon which relates to claims 17-21;
Group IV	composition with methylal or methyl acetate which relates to claims 22-24;
GroupV	compositions with an alcohol and halogenated hydrocarbon which relates to claim 25;
Group VI	compositions with water which relates to claim 26;
Group VII	compositions with nitromethane which relates to claims 27-28.

_/Yvonne Eyler/
Director, Technology Center 1700

Yvonne L. Eyler, Director
Technology Center 1700
Chemical and Materials Engineering

J. Eric Sumner
HONEYWELL/FOX ROTHSCHILD
Patent Services
101 Columbia Road
Morristown NJ 07962

UNITED STATES PATENT AND TRADEMARK OFFICE

UNITED STATES DEPARTMENT OF COMMERCE
United States Patent and Trademark Office
Address: COMMISSIONER FOR PATENTS
P.O. Box 1450
Alexandria, Virginia 22313-1450
www.uspto.gov

APPLICATION NO.	FILING DATE	FIRST NAMED INVENTOR	ATTORNEY DOCKET NO.	CONFIRMATION NO.
12/605,617	10/26/2009	Jonathan Blake SCOTT	2009-140 Scott	1168

27569 7590 09/24/2010
PAUL AND PAUL
2000 MARKET STREET
SUITE 2900
PHILADELPHIA, PA 19103

EXAMINER
MARCANTONI, PAUL D

ART UNIT	PAPER NUMBER
1793	

NOTIFICATION DATE	DELIVERY MODE
09/24/2010	ELECTRONIC

Please find below and/or attached an Office communication concerning this application or proceeding.

The time period for reply, if any, is set in the attached communication.

Notice of the Office communication was sent electronically on above-indicated "Notification Date" to the following e-mail address(es):

INFO@PAULANDPAUL.COM
claire@paulandpaul.com
fpanna@paulandpaul.com

UNITED STATES PATENT AND TRADEMARK OFFICE

Commissioner for Patents
United States Patent and Trademark Office
P.O. Box 1450
Alexandria, VA 22313-1450
www.uspto.gov

wk

Mailed:

SEP 2 4 2010

In re application of :
Scott : DECISION ON
Serial No. 12/605,617 : PETITION
Filed: October 26, 2009 :
For: INCORPORATION OF DRILLING CUTTINGS INTO
STABLE LOAD-BEARING

This is a decision on the PETITION FILED UNDER 37 CFR 1.181 on July 30, 2010 to withdraw the final status of the Office Action dated July 6, 2010.

In an Office Action of July 6, 2010, the Examiner finally rejected all the pending claims in the first action, alleging that the claims were drawn to the same invention as claimed in the parent application and could have been finally rejected on the grounds and art of record in the next office action in the earlier application.

Examination of the claims shows that the words "said structure having a shape and a size and containing a continuous portion having a cross-sectional area at least as large as the are of a circle having a diameter of101 millimeters" in the claims now pending have no counterpart in the claim from the earlier invention.

DECISION

The petition for withdrawal of finality is **GRANTED.**

/W. GARY JONES/
W. Gary Jones, Director
Technology Center 1700
Chemical and Materials Engineering

John E. Drach
PAUL AND PAUL
2000 MARKET STREET
SUITE 2900
PHILADELPHIA PA 19103

UNITED STATES PATENT AND TRADEMARK OFFICE

UNITED STATES DEPARTMENT OF COMMERCE
United States Patent and Trademark Office
Address: COMMISSIONER FOR PATENTS
P.O. Box 1450
Alexandria, Virginia 22313-1450
www.uspto.gov

APPLICATION NO.	FILING DATE	FIRST NAMED INVENTOR	ATTORNEY DOCKET NO.	CONFIRMATION NO.
12/605,652	10/26/2009	Phillip Emerson Alexander	67097-293PUS2;PA11606A-AA	1235

26096 7590 10/24/2011
CARLSON, GASKEY & OLDS, P.C.
400 WEST MAPLE ROAD
SUITE 350
BIRMINGHAM, MI 48009

EXAMINER
FUQUA, SHAWNTINA T

ART UNIT	PAPER NUMBER
3742	

MAIL DATE	DELIVERY MODE
10/24/2011	PAPER

Please find below and/or attached an Office communication concerning this application or proceeding.

The time period for reply, if any, is set in the attached communication.

UNITED STATES PATENT AND TRADEMARK OFFICE

Commissioner for Patents
United States Patent and Trademark Office
P.O. Box 1450
Alexandria, VA 22313-1450
www.uspto.gov

CARLSON, GASKEY & OLDS, P.C.
400 WEST MAPLE ROAD
SUITE 350
BIRMINGHAM MI 48009

In re Application of:
ALEXANDER, PHILLIP EMERSON et al
Serial No. 12/605,652
Filed: Oct. 26, 2009
Docket: 67097-293PUS2;PA11606A-AA
Title: CONNECTOR FOR HEATER

DECISION ON PETITION
UNDER 37 CFR § 1.181

This is a decision on the petition filed on Oct. 14, 2011 by which petitioner requests reconsideration and withdrawal of the restriction requirement mailed May 18, 2011, and that non-elected claims 18-19 be rejoined and examined on the merits. This petition is being considered pursuant to 37 CFR 1.144 and 37 CFR 1.181, and no fee is required.

The petition is granted.

After consulting with the examiner, the requested relief is granted. The restriction requirement mailed on May 18, 2011 is hereby withdrawn. Non-elected claims 18-19 will be rejoined with the elected invention as set forth in claims 1-17 and 20-26. The examiner will issue an Office action to rejoin and treat the non-elected claims 18-19 on the merits after the applicant filed his response to the outstanding Office action of September 12, 2011.

The application is being forwarded to the examiner via Supervisory Patent Examiner of Art Unit 3742 awaiting a response to the outstanding Office action. Any inquiry regarding this decision should be directed to Henry C. Yuen, Special Programs Examiner, at (571) 272-4856.

PETITION GRANTED.

Sharon A. Gibson, Director
Technology Center 3700

UNITED STATES PATENT AND TRADEMARK OFFICE

Commissioner for Patents
United States Patent and Trademark Office
P.O. Box 1450
Alexandria, VA 22313-1450
www.uspto.gov

VOLPE AND KOENIG, P.C.
DEPT. ICC
UNITED PLAZA
30 SOUTH 17TH STREET
PHILADELPHIA PA 19103

MAILED
SEP 09 2010
OFFICE OF PETITIONS

In re Application of	:	
Peter S. Wang et al	:	DECISION GRANTING STATUS
Application No. 12/605,675	:	UNDER 37 CFR 1.47(a)
Filed: October 26, 2009	:	
Attorney Docket No. IPH-2-2201US02	:	

This is in response to the petition under 37 CFR 1.47(a), filed June 9, 2010.

The petition is **GRANTED.**

Petitioner has shown that the non-signing inventor has refused to join in the filing of the above-identified application.

The application and papers have been reviewed and found in compliance with 37 CFR 1.47(a). This application is hereby accorded Rule 1.47(a) status.

As provided in 37 CFR 1.47(c), this Office will forward notice of this application's filing to the non-signing inventor at the address given in the petition. Notice of the filing of this application will also be published in the Official Gazette.

This application is being referred to the Office of Patent Application Processing for pre-examination processing.

Telephone inquiries regarding this decision should be directed to the undersigned at (571) 272-3208.

/KOC/
Karen Creasy
Petitions Examiner
Office of Petitions

UNITED STATES PATENT AND TRADEMARK OFFICE

Commissioner for Patents
United States Patent and Trademark Office
P.O. Box 1450
Alexandria, VA 22313-1450
www.uspto.gov

MICHAEL WINFIELD GOLTRY
4000 N. CENTRAL AVENUE, SUITE 1220
PHOENIX AZ 85012

MAILED
OCT 21 2011
OFFICE OF PETITIONS

In re Application of :
Finell :
Application No. 12/605,713 : ON PETITION
Filed: October 26, 2009 :
Attorney Docket No. 4497-PA1C :
For: CRIB BUMPER AND BED
STRUCTURE FORMED THEREWITH

This is a decision on the petition, filed October 4, 2011, under 37 CFR 1.137(b) to revive the above-identified application.

The petition is **GRANTED**.

The above-identified application became abandoned for failure to timely submit a reply within three (3) months of the mailing of the July 8, 2010 non-final Office action. No response being received and no extensions of time being obtained under the provisions of 37 CFR 1.136(a), this application became abandoned on October 9, 2010. A Notice of Abandonment was mailed on January 18, 2011.

Applicant has submitted an amendment in reply to the July 8, 2010 non-final Office action, an acceptable statement of the unintentional nature of the delay in responding to the July 8, 2010 non-final Office action, and the $930.00 petition fee. All of the requirements under 37 CFR 1.137(b) being met, the petition is granted.

After the mailing of this decision, the application will be returned to Technology Center AU 3674 for consideration of the amendment filed on October 4, 2011.

Telephone inquiries should be directed to the undersigned at (571) 272-3230.

Shirene Willis Brantley
Senior Petitions Attorney
Office of Petitions

UNITED STATES PATENT AND TRADEMARK OFFICE

UNITED STATES DEPARTMENT OF COMMERCE
United States Patent and Trademark Office
Address: COMMISSIONER FOR PATENTS
P.O. Box 1450
Alexandria, Virginia 22313-1450
www.uspto.gov

APPLICATION NO.	FILING DATE	FIRST NAMED INVENTOR	ATTORNEY DOCKET NO.	CONFIRMATION NO.
12/605,714	10/26/2009	Daiji Furuhashi	MNL-2018-2411	1376

7590 03/01/2011
NIXON & VANDERHYE, PC
901 NORTH GLEBE ROAD, 11TH FLOOR
ARLINGTON, VA 22203

EXAMINER
MOULIS, THOMAS N

ART UNIT	PAPER NUMBER
3747	

MAIL DATE	DELIVERY MODE
03/01/2011	PAPER

DECISION GRANTING PETITION UNDER 37 CFR 1.138(d)

The declaration of express abandonment is recognized

This is in response to the petition under 37 CFR 1.138(d), requesting for a refund of any previously paid search fee and excess claims fee in the above-identified application.

The petition is granted.

The express abandonment is recognized. Any previously paid search fee and excess claims fee are hereby refunded.

Telephone inquiries should be directed to the Office of Data Management at (571) 272-4200.

Patent Publication Branch
Office of Data Management

FORM PET651G (Rev. 08/07)

SENSING OF MEMORY CELLS IN A SOLID STATE MEMORY DEVICE BY FIXED DISCHARGE OF A BIT LINE

RELATED APPLICATIONS

[0001] This is a continuation application of U.S. Patent Application Serial No. 11/943,136, filed November 20, 2007 now, U.S. Pat. 7,609,560. ~~(allowed), titled~~ "SENSING OF MEMORY CELLS IN A SOLID STATE MEMORY DEVICE BY FIXED DISCHARGE OF A BIT LINE" which is commonly assigned, the entire contents of which are incorporated herein by reference.

TECHNICAL FIELD

[0002] The present disclosure relates generally to semiconductor memory and more particularly to non-volatile memory devices.

BACKGROUND

[0003] Electronic devices commonly have some type of bulk storage device available to them. A common example is a hard disk drive (HDD). HDDs are capable of large amounts of storage at relatively low cost, with current consumer HDDs available with over one terabyte of capacity.

[0004] HDDs generally store data on rotating magnetic media or platters. Data is typically stored as a pattern of magnetic flux reversals on the platters. To write data to a typical HDD, the platter is rotated at high speed while a write head floating above the platter generates a series of magnetic pulses to align magnetic particles on the platter to represent the data. To read data from a typical HDD, resistance changes are induced in a magnetoresistive read head as it floats above the platter rotated at high speed. In practice, the resulting data signal is an analog signal whose peaks and valleys are the result of the magnetic flux reversals of the data pattern. Digital signal processing techniques called partial response maximum likelihood (PRML) are then used to sample the analog data signal to determine the likely data pattern responsible for generating the data signal.

[0005] HDDs have certain drawbacks due to their mechanical nature. HDDs are susceptible to damage or excessive read/write errors due to shock, vibration or strong

UNITED STATES PATENT AND TRADEMARK OFFICE

Commissioner for Patents
United States Patent and Trademark Office
P.O. Box 1450
Alexandria, VA 22313-1450
www.uspto.gov

MCDERMOTT WILL & EMERY LLP
600 13TH STREET, N.W.
WASHINGTON DC 20005-3096

MAILED
NOV 23 2011
OFFICE OF PETITIONS

In re Patent No. 8,003,963	:	
Issue Date: August 23, 2011	:	
Application No. 12/605,725	:	ON PETITION
Filed: October 26, 2009	:	
Attorney Docket No. 050083-0250	:	

This is a decision on the petition filed November 4, 2011, a request under 37 CFR 3.81(b) to correct the name of the assignee on the front page of the above-identified patent by way of a Certificate of Correction.

The petition is **GRANTED**.

The patent file is being forwarded to the Certificates of Correction Branch for issuance of the requested Certificate of Correction.

Telephone inquiries concerning this decision may be directed to the Kimberly Inabinet at (571) 272-4618. Inquiries regarding the issuance of a certificate of correction should be directed to the Certificate of Correction Branch at (703) 756-1814.

/Carl Friedman/
Carl Friedman
Petitions Examiner
Office of Petitions

Doc Code: PET.GREEN
Document Description: Petition for Green Tech Pilot

PTO/SB/420 (05-10)
Approved for use through 01/31/2011. OMB 0651-0062
U.S. Patent and Trademark Office; U. S. DEPARTMENT OF COMMERCE
Under the Paperwork Reduction Act of 1995, no persons are required to respond to a collection of information unless it displays a valid OMB control number.

PETITION TO MAKE SPECIAL UNDER THE GREEN TECHNOLOGY PILOT PROGRAM

Attorney Docket Number: 0530	Application Number (if known): 12/605,815	Filing date: 10-26-2009

First Named Inventor: Laszlo LIPCSEI

Title: CIRCUITS AND METHODS FOR POWER CONVERSION

APPLICANT HEREBY REQUESTS TO PARTICIPATE IN THE GREEN TECHNOLOGY PILOT PROGRAM FOR THE ABOVE-IDENTIFIED APPLICATION. See Instruction Sheet on page 2.

This petition must be timely filed electronically using the USPTO electronic filing system, EFS-Web.

1. By filing this petition:

   Applicant is requesting early publication: Applicant hereby requests early publication under 37 CFR 1.219 and the publication fee set forth in 37 CFR 1.18(d) accompanies this request.

2. By filing this petition: applicant is agreeing to make an election without traverse in a telephonic interview and elect an invention that meets the eligibility requirements set forth in the notice titled "Pilot Program for Green Technologies Including Greenhouse Gas Reduction," as modified by the notice titled "Elimination of Classification Requirement in the Green Technology Pilot Program," each of which was published in the Federal Register, if the Office determines that the claims are not obviously directed to a single invention.

3. This request is accompanied by statements of special status for the eligibility requirement.

4. The application contains no more than three (3) independent claims and twenty (20) total claims.

5. The application does not contain any multiple dependent claims.

6. Other attachments: _____

Signature /James P. Hao/	Date 11-29-2010
Name (Print/Typed) James P. Hao	Registration Number 36398

***Note**: Signatures of all the inventors or assignees of record of the entire interest or their representative(s) are required in accordance with 37 CFR 1.33 and 11.18. Please see 37 CFR 1.4(d) for the form of the signature. If necessary, submit multiple forms for more than one signature, see below*.*

☐ *Total of _____ forms are submitted.

The information is required to obtain or retain a benefit by the public which is to file (and by the USPTO to process) an application. Confidentiality is governed by 35 U.S.C. 122 and 37 CFR 1.11 and 1.14. This collection is estimated to take 1 hour to complete, including gathering, preparing, and submitting the completed application form to the USPTO. Time will vary depending upon the individual case. Any comments on the amount of time you require to complete this form and/or suggestions for reducing this burden, should be sent to the Chief Information Officer, U.S. Patent and Trademark Office, U.S. Department of Commerce, P.O. Box 1450, Alexandria, VA 22313-1450. DO NOT SEND FEES OR COMPLETED FORMS TO THIS ADDRESS. **SEND TO: Commissioner for Patents, P.O. Box 1450, Alexandria, VA 22313-1450.**

If you need assistance in completing the form, call 1-800-PTO-9199 and select option 2.

Under the Paperwork Reduction Act of 1995, no persons are required to respond to a collection of information unless it displays a valid OMB control number.

Instruction Sheet for Petition to Make Special Under the Green Technology Pilot Program

(Not to be Submitted to the USPTO)

The following is a summary of the requirements (for more information see the notices (i) "Pilot Program for Green Technologies Including Greenhouse Gas Reduction" and (ii) "Elimination of Classification Requirement in the Green Technology Pilot Program," available on the USPTO web site at http://www.uspto.gov/patents/init_events/green_tech.jsp):

(1) The application must be a non-reissue, non-provisional utility application filed under 35 U.S.C. 111(a), or an international application that has entered the national stage in compliance with 35 U.S.C. 371. The application must be previously filed before the publication date of the notice cited above. Reexamination proceedings are excluded from this pilot program.

(2) The application must contain three or fewer independent claims and twenty or fewer total claims. The application must not contain any multiple dependent claims. For an application that contains more than three independent claims or twenty total claims, or multiple dependent claims, applicant must file a preliminary amendment in compliance with 37 CFR 1.121 to cancel the excess claims and/or the multiple dependent claims at the time the petition to make special is filed.

(3) The claims must be directed to a single invention that materially enhances the quality of the environment, or that materially contributes to: (1) the discovery or development of renewable energy resources; (2) the more efficient utilization and conservation of energy resources; or (3) green house gas emission reduction (see the eligibility requirements of sections II and III of the notice (i) cited above). The petition must include a statement that, if the USPTO determines that the claims are directed to multiple inventions (e.g., in a restriction requirement), applicant will agree to make an election without traverse in a telephonic interview, and elect an invention that meets the eligibility requirements in section II or III of the notice (i) cited above.

(4) The petition to make special must be timely filed electronically using the USPTO electronic filing system, EFS-Web, and selecting the document description of "Petition for Green Tech Pilot" on the EFS-Web screen. Applicant should use form PTO/SB/420, which is available as a Portable Document Format (PDF) fillable form in EFS-Web and on the USPTO Web site.

(5) The petition to make special must be filed at least one day prior to the date that a first Office action (which may be an Office action containing only a restriction requirement) appears in the Patent Application Information Retrieval (PAIR) system. Applicant may check the status of the application using PAIR.

(6) The petition to make special must be accompanied by a request for early publication in compliance with 37 CFR 1.219 and the publication fee set forth in 37 CFR 1.18(d).

Privacy Act Statement

The **Privacy Act of 1974 (P.L. 93-579)** requires that you be given certain information in connection with your submission of the attached form related to a patent application or patent. Accordingly, pursuant to the requirements of the Act, please be advised that: (1) the general authority for the collection of this information is 35 U.S.C. 2(b)(2); (2) furnishing of the information solicited is voluntary; and (3) the principal purpose for which the information is used by the U.S. Patent and Trademark Office is to process and/or examine your submission related to a patent application or patent. If you do not furnish the requested information, the U.S. Patent and Trademark Office may not be able to process and/or examine your submission, which may result in termination of proceedings or abandonment of the application or expiration of the patent.

The information provided by you in this form will be subject to the following routine uses:

1. The information on this form will be treated confidentially to the extent allowed under the Freedom of Information Act (5 U.S.C. 552) and the Privacy Act (5 U.S.C 552a). Records from this system of records may be disclosed to the Department of Justice to determine whether disclosure of these records is required by the Freedom of Information Act.
2. A record from this system of records may be disclosed, as a routine use, in the course of presenting evidence to a court, magistrate, or administrative tribunal, including disclosures to opposing counsel in the course of settlement negotiations.
3. A record in this system of records may be disclosed, as a routine use, to a Member of Congress submitting a request involving an individual, to whom the record pertains, when the individual has requested assistance from the Member with respect to the subject matter of the record.
4. A record in this system of records may be disclosed, as a routine use, to a contractor of the Agency having need for the information in order to perform a contract. Recipients of information shall be required to comply with the requirements of the Privacy Act of 1974, as amended, pursuant to 5 U.S.C. 552a(m).
5. A record related to an International Application filed under the Patent Cooperation Treaty in this system of records may be disclosed, as a routine use, to the International Bureau of the World Intellectual Property Organization, pursuant to the Patent Cooperation Treaty.
6. A record in this system of records may be disclosed, as a routine use, to another federal agency for purposes of National Security review (35 U.S.C. 181) and for review pursuant to the Atomic Energy Act (42 U.S.C. 218(c)).
7. A record from this system of records may be disclosed, as a routine use, to the Administrator, General Services, or his/her designee, during an inspection of records conducted by GSA as part of that agency's responsibility to recommend improvements in records management practices and programs, under authority of 44 U.S.C. 2904 and 2906. Such disclosure shall be made in accordance with the GSA regulations governing inspection of records for this purpose, and any other relevant (*i.e.*, GSA or Commerce) directive. Such disclosure shall not be used to make determinations about individuals.
8. A record from this system of records may be disclosed, as a routine use, to the public after either publication of the application pursuant to 35 U.S.C. 122(b) or issuance of a patent pursuant to 35 U.S.C. 151. Further, a record may be disclosed, subject to the limitations of 37 CFR 1.14, as a routine use, to the public if the record was filed in an application which became abandoned or in which the proceedings were terminated and which application is referenced by either a published application, an application open to public inspection or an issued patent.
9. A record from this system of records may be disclosed, as a routine use, to a Federal, State, or local law enforcement agency, if the USPTO becomes aware of a violation or potential violation of law or regulation.

UNITED STATES PATENT AND TRADEMARK OFFICE

UNITED STATES DEPARTMENT OF COMMERCE
United States Patent and Trademark Office
Address: COMMISSIONER FOR PATENTS
P.O. Box 1450
Alexandria, Virginia 22313-1450
www.uspto.gov

APPLICATION NO.	FILING DATE	FIRST NAMED INVENTOR	ATTORNEY DOCKET NO.	CONFIRMATION NO.
12/605,815	10/26/2009	Laszlo LIPCSEI	0530	1570

71271 7590 12/08/2010
PATENT PROSECUTION
O2MIRCO , INC.
3118 PATRICK HENRY DRIVE
SANTA CLARA, CA 95054

EXAMINER
ASSOUAD, PATRICK J

ART UNIT	PAPER NUMBER
2858	

MAIL DATE	DELIVERY MODE
12/08/2010	PAPER

Please find below and/or attached an Office communication concerning this application or proceeding.

The time period for reply, if any, is set in the attached communication.

UNITED STATES PATENT AND TRADEMARK OFFICE

Commissioner for Patents
United States Patent and Trademark Office
P.O. Box 1450
Alexandria, VA 22313-1450
www.uspto.gov

PATENT PROSECUTION
O2MIRCO , INC.
3118 PATRICK HENRY DRIVE
SANTA CLARA CA 95054

In re Application of	:	
Laszlo LIPCSEI	:	DECISION ON PETITION
Application No. 12/605,815	:	TO MAKE SPECIAL UNDER
Filed: October 26, 2009	:	THE GREEN TECHNOLOGY
Attorney Docket No. 0530	:	PILOT PROGRAM

This is a decision on the petition under 37 CFR 1.102, filed on November 29, 2010, to make the above-identified application special under the pilot program for applications pertaining to Green Technologies as set forth 74 Federal Register Notice 64666 (December 8, 2009) and amended by 75 Federal Register Notice 28554 (May 21, 2010) and 75 Federal Register Notice 69049 (November 10, 2010).

The petition is **GRANTED**.

A grantable petition to make an application special under 37 CFR 1.102 and the pilot program as set forth in 74 FR 64666 must be directed to a nonprovisional application filed under 35 USC 111(a) or be a national stage entry under 35 USC 371, exclusive of any reissue applications.

In order to qualify for special status, the following requirements must be met. 1) The application must have no more than 3 independent claims and no more than 20 total claims. 2) The application must not contain any multiple dependent claims. 3) The petition must state the basis for seeking special status, i.e., the claimed invention either: A) materially enhances the quality of the environment or B) materially contributes to: i) the discovery or development of renewable energy resources, ii) the more efficient utilization and conservation of energy resources, or iii) greenhouse gas emission reduction. 4) If the disclosure is not clear on its face that the claimed invention materially contributes under category (A) or (B), the petition must be accompanied by a statement by the applicant, assignee, or an attorney/agent registered to practice before the Office explaining how the materiality standard is met. 5) A statement that applicant will agree to make an election without traverse in a telephonic interview if a restriction requirement is made by the examiner. 6) The petition to make special must be filed electronically. 7) The petition must be filed at least one day prior to the date that a first Office Action appears in the Patent Application Information Retrieval (PAIR) system. 8) The petition must be accompanied by a request for early publication in compliance with 37 CFR 1.219 and include the publication fee as set forth in 37 CFR 1.18(d).

The requirement for a fee for consideration of the petition to make special for applications pertaining to Green Technologies has been waived.

The instant petition complies with items 1 – 8 above. Accordingly, the above-identified application has been accorded "special" status.

Telephone inquires concerning this decision should be directed to Lee W. Young at 571-272-4549.

The application is being forwarded to the Technology Center Art Unit 2858 for action in its regular turn.

Lee W. Young
Quality Assurance Specialist
Technology Center 2800

UNITED STATES PATENT AND TRADEMARK OFFICE

Commissioner for Patents
United States Patent and Trademark Office
P.O. Box 1450
Alexandria, VA 22313-1450
www.uspto.gov

BUCHALTER NEMER
18400 VON KARMAN AVE.
SUITE 800
IRVINE CA 92612

MAILED

DEC 16 2010

OFFICE OF PETITIONS

In re Application of
Young et al.
Application No. 12/605,819
Filed: October 26, 2009
Attorney Docket No. G5765-0305
For: Intelligent Vehicle Dashboard

: DECISION NOTING JOINDER OF
: INVENTOR AND PETITION
: UNDER 37 CFR 1.47(a)

Papers have been filed on June 29, 2010, in response to a "Decision Refusing Status Under 37 CFR 1.47(a)," mailed June 15, 2010, and include a Declaration that is signed by a previously non-signing legal representative (Ben Johnson) for deceased inventor Larry Johnson , in compliance with 37 CFR 1.63.

The petition is **DISMISSED AS MOOT**.

In view of the joinder of the inventor, further consideration under § 1.47(a) is not necessary. This application does not have any Rule 1.47 status and no such status should appear on the record for this file. This application need not be returned to this Office for any further consideration under 37 CFR 1.47(a).

This application is being referred to the Office of Patent Application Processing.

Telephone inquiries should be directed to the undersigned at (571) 272-3215.

Charlema Grant
Petitions Attorney
Office of Petitions

UNITED STATES PATENT AND TRADEMARK OFFICE

UNITED STATES DEPARTMENT OF COMMERCE
United States Patent and Trademark Office
Address: COMMISSIONER FOR PATENTS
P.O. Box 1450
Alexandria, Virginia 22313-1450
www.uspto.gov

APPLICATION NO.	FILING DATE	FIRST NAMED INVENTOR	ATTORNEY DOCKET NO.	CONFIRMATION NO.
12/605,840	10/26/2009	Masanori SHINTANI	0649-2270PUS1	1619

2292 7590 02/22/2011
BIRCH STEWART KOLASCH & BIRCH
PO BOX 747
FALLS CHURCH, VA 22040-0747

EXAMINER

ART UNIT	PAPER NUMBER
3656	

NOTIFICATION DATE	DELIVERY MODE
02/22/2011	ELECTRONIC

Please find below and/or attached an Office communication concerning this application or proceeding.

The time period for reply, if any, is set in the attached communication.

Notice of the Office communication was sent electronically on above-indicated "Notification Date" to the following e-mail address(es):

mailroom@bskb.com

UNITED STATES PATENT AND TRADEMARK OFFICE

Commissioner for Patents
United States Patent and Trademark Office
P.O. Box 1450
Alexandria, VA 22313-1450
www.uspto.gov

FEB 1 8 2011

BIRCH STEWART KOLASCH & BIRCH
PO BOX 747
FALLS CHURCH VA 22040-0747

In re application of	:	**DECISION ON REQUEST TO**
Shintani Masanori	:	**PARTICIPATE IN PATENT**
Application No. 12/605,840	:	**PROSECUTION HIGHWAY**
Filed: October 26, 2009	:	**PROGRAM AND PETITION**
For: SHIFT OPERATION DEVICE OF	:	**TO MAKE SPECIAL UNDER**
AUTOMATIC TRANSMISSION	:	**37 CFR 1.102(a)**

This is a decision on the request to participate in the Patent Prosecution Highway (PPH) program and the petition under 37 CFR 1.102(a), filed December 20, 2010, to make the above-identified application special.

The request and petition are **GRANTED**.

A grantable request to participate in the PPH program and petition to make special require:

(1) The U.S. application must validly claim priority under 35 U.S.C. 119(a) to one or more applications filed in the JPO, USPTO;
(2) Applicant must submit a copy of the allowable/patentable claim(s) from the JPO application(s) along with an English translation thereof and a statement that the English translation is accurate;
(3) All the claims in the U.S. application must sufficiently correspond or be amended to sufficiently correspond to the allowable/patentable claim(s) in the JPO application(s);
(4) Examination of the U.S. application has not begun;
(5) Applicant must submit a copy of the latest Office action from each of the JPO application(s) containing the allowable/patentable claim(s) along with an English translation thereof and a statement that the English translation is accurate;
(6) Applicant must submit an IDS listing the documents cited by the JPO examiner in the JPO Office action along with copies of documents except U.S. patents or U.S. patent application publications.

In light of the preliminary amendment filed December 20, 2010. The request to participate in the PPH pilot program complies with the above requirements. Therefore, the above-identified application has been accorded "special" status.

All other inquiries concerning the examination or status of the application should be directed to the Patent Application Information Retrieval (PAIR) system.

The application is being forwarded to the examiner for action on the merits commensurate with this decision.

Any inquiry regarding this decision should be directed to Mikado Buiz, Quality Assurance Specialist, at (571) 272-6578.

/ Mikado Buiz /

Mikado Buiz,
Quality Assurance Specialist
Technology Center 3600

BM/BM: 2/18/11

6 AUG 2010

United States Patent and Trademark Office

Commissioner for Patents
United States Patent and Trademark Office
P.O. Box 1450
Alexandria, VA 22313-1450
www.uspto.gov

OLIFF & BERRIDGE, PLC
P.O. BOX 320850
ALEXANDRIA VA 22320-4850

In re Application of
Stern
Application No. 12/605,866
Filing Date: 26 October 2009
Att. Docket No.: 143377
For: Method And System For Compressed Imaging

This is in response to the petition filed on 23 March 2010.

BACKGROUND

International application PCT//IL2008/000555 was filed on 27 April 2008, claimed an earliest priority date of 24 April 2007, and designated the United States. The International Bureau transmitted a copy of the published international application to the USPTO on 30 October 2008. Hence, the 30-month time period for payment of the basic national fee in the United States expired as of midnight on 26 October 2009 (since 24 October 2009 was a Saturday). International application PCT/IL2008/000555 became abandoned with respect to the national stage for failure to timely pay the basic national fee. On 26 October 2009, applicant filed this application under 35 U.S.C. 111(a) as a continuation-in-part of said international application.

On 05 February 2010, applicants filed a "Request For Correction Of PALM Records" in view of the fact that a Filing Receipt mailed on 19 January 2010 did not reflect the priority claim to U.S. application 60/907,943, filed on 24 April 2007 and claimed during the international phase of said international application.

On 25 February 2010, the USPTO mailed a "Response To Request For Corrected Filing Receipt" which stated that "the application(s) to which priority is claimed were filed over a year prior to the filing date of this application. Therefore, the referenced application(s) cannot be claimed as domestic or foreign priority."

DISCUSSION

Applicant requests correction of the Filing Receipt and of the records of the USPTO to reflect the claim to 60/907,943. Applicant has provided a copy of Form PCT/RO/198 issued by the Israel Receiving Office in PCT/IL2008/000555, reflecting the 24 April 2007 priority date as based on 60/907,943. Counsel explains in effect that the convention year expired during a holiday in Israel (Pesach), and that the international application was filed on the first business day after said holiday observance, to wit, 27 April 2008. Counsel has provided a list of dates the Israel Patent Office was closed during 2008 (not explicitly listing each Friday and Saturday), and relies upon PCT Rule 80.5(iii), which states that

> If the expiration of any period during which any document or fee must reach a national Office or intergovernmental organization falls on a day:
>
> (iii) which, where such Office or organization is situated in more than one locality, is an official holiday in at least one of the localities in which such Office or organization is situated, and in circumstances where the national law applicable by that Office or organization provides, in respect of national applications, that, in such a case, such period shall expire on a subsequent day... the period shall expire on the next subsequent day on which none of the said four circumstances exists.

In view of the totality of the evidence currently of record, it would be appropriate to conclude that the priority claim in question was timely claimed. Accordingly, it would be appropriate to grant the requested relief.

DECISION

The petition is **GRANTED**, as described herein.

This application is being returned to the Office of Patent Application Processing for further processing, including (1) the correction of the electronic records of the USPTO (PALM) to reflect the priority claim to 60/907,943, and (2) the issuance of a corrected filing receipt reflecting said priority claim. The Office of Patent Application Processing is advised that this processing is proper, despite the respective filing dates of the applications, for the reasons described in this Decision.

/George Dombroske/
George Dombroske
PCT Legal Examiner
Office of PCT Legal Administration
Tel: (571) 272-3283

UNITED STATES PATENT AND TRADEMARK OFFICE

UNITED STATES DEPARTMENT OF COMMERCE
United States Patent and Trademark Office
Address: COMMISSIONER FOR PATENTS
P.O. Box 1450
Alexandria, Virginia 22313-1450
www.uspto.gov

APPLICATION NO.	FILING DATE	FIRST NAMED INVENTOR	ATTORNEY DOCKET NO.	CONFIRMATION NO.
12/605,891	10/26/2009	Tzung-I Su	66007-412	1718

65358 7590 02/29/2012
WPAT, PC
INTELLECTUAL PROPERTY ATTORNEYS
7225 BEVERLY ST.
ANNANDALE, VA 22003

EXAMINER
WONG, TINA MEI SENG

ART UNIT	PAPER NUMBER
2874	

MAIL DATE	DELIVERY MODE
02/29/2012	PAPER

Please find below and/or attached an Office communication concerning this application or proceeding.

The time period for reply, if any, is set in the attached communication.

UNITED STATES PATENT AND TRADEMARK OFFICE

Commissioner for Patents
United States Patent and Trademark Office
P.O. Box 1450
Alexandria, VA 22313-1450
www.uspto.gov

WPAT, P.C.
INTELLECTUAL PROPERTY ATTORNEYS
7225 BEVERLY ST.
ANNANDALE, VA 22003

In re Application of Tzung-I Su et al.	:	
Appl. No.: 12/605,891	:	DECISION ON PETITION
Filed: October 26, 2009	:	UNDER 37 C.F.R. § 1.59
Attorney Docket No.: 66007-412	:	
For: FOCUSING MEMBER AND	:	
OPTOELECTRONIC DEVICE	:	

This is a decision on the petition under 37 C.F.R. §1.59(b), filed January 13, 2012, to expunge information filed concurrently from the above-identified application.

The petition is DENIED.

Petitioner states that "[t]he material in the submitted envelope or container is considered as a trade secret or proprietary" and requests that "the submitted trade secret material be" be expunged from the record because petitioner believes that the material should not be found to be material to patentability. The required petition fee has been received.

Pursuant to M.P.E.P. § 724.05. I., "... Any such petition to expunge information submitted under MPEP § 724.02 should be submitted at the time of filing the information under MPEP § 724.02 and directed to the Technology Center (TC) to which the application is assigned. Such petition must contain:

(A) a clear identification of the information to be expunged without disclosure of the details thereof;
(B) a clear statement that the information to be expunged is trade secret material, proprietary material, and/or subject to a protective order, and that the information has not been otherwise made public;
(C) a commitment on the part of the petitioner to retain such information for the period of any patent with regard to which such information is submitted;
(D) a statement that the petition to expunge is being submitted by, or on behalf of, the party in interest who originally submitted the information;
(E) the fee as set forth in 37 CFR 1.17(g) for a petition under 37 CFR 1.59(b)."

UNITED STATES PATENT AND TRADEMARK OFFICE

UNITED STATES DEPARTMENT OF COMMERCE
United States Patent and Trademark Office
Address: COMMISSIONER FOR PATENTS
P.O. Box 1450
Alexandria, Virginia 22313-1450
www.uspto.gov

APPLICATION NO.	FILING DATE	FIRST NAMED INVENTOR	ATTORNEY DOCKET NO.	CONFIRMATION NO.
12/605,891	10/26/2009	Tzung-I Su	66007-412	1718

65358 7590 02/29/2012
WPAT, PC
INTELLECTUAL PROPERTY ATTORNEYS
7225 BEVERLY ST.
ANNANDALE, VA 22003

EXAMINER
WONG, TINA MEI SENG

ART UNIT	PAPER NUMBER
2874	

MAIL DATE	DELIVERY MODE
02/29/2012	PAPER

Please find below and/or attached an Office communication concerning this application or proceeding.

The time period for reply, if any, is set in the attached communication.

UNITED STATES PATENT AND TRADEMARK OFFICE

Commissioner for Patents
United States Patent and Trademark Office
P.O. Box 1450
Alexandria, VA 22313-1450
www.uspto.gov

WPAT, P.C.
INTELLECTUAL PROPERTY ATTORNEYS
7225 BEVERLY ST.
ANNANDALE, VA 22003

In re Application of Tzung-I Su et al.	:	
Appl. No.: 12/605,891	:	DECISION ON PETITION
Filed: October 26, 2009	:	UNDER 37 C.F.R. § 1.59
Attorney Docket No.: 66007-412	:	
For: FOCUSING MEMBER AND	:	
OPTOELECTRONIC DEVICE	:	

This is a decision on the petition under 37 C.F.R. §1.59(b), filed January 13, 2012, to expunge information filed concurrently from the above-identified application.

The petition is DENIED.

Petitioner states that "[t]he material in the submitted envelope or container is considered as a trade secret or proprietary" and requests that "the submitted trade secret material be" be expunged from the record because petitioner believes that the material should not be found to be material to patentability. The required petition fee has been received.

Pursuant to M.P.E.P. § 724.05. I., "... Any such petition to expunge information submitted under MPEP § 724.02 should be submitted at the time of filing the information under MPEP § 724.02 and directed to the Technology Center (TC) to which the application is assigned. Such petition must contain:

(A) a clear identification of the information to be expunged without disclosure of the details thereof;
(B) a clear statement that the information to be expunged is trade secret material, proprietary material, and/or subject to a protective order, and that the information has not been otherwise made public;
(C) a commitment on the part of the petitioner to retain such information for the period of any patent with regard to which such information is submitted;
(D) a statement that the petition to expunge is being submitted by, or on behalf of, the party in interest who originally submitted the information;
(E) the fee as set forth in 37 CFR 1.17(g) for a petition under 37 CFR 1.59(b)."

The petition also does not satisfy conditions (B), (C) and (D) above for a grantable petition to expunge proprietary because there is no assertion the information sought to be expunged has not been made public, there is no a commitment on the part of the petitioner to retain such information for the period of any patent with regard to which such information is submitted and there is no statement that the petition to expunge is being submitted by, or on behalf of, the party in interest who originally submitted the information .

For the above-stated reasons, the petition to expunge is denied. The information submitted with the IDS on January 23, 2012 will remain in the file record.

Any inquiry regarding this decision should be directed to Hien H. Phan, Quality Assurance Specialist, at (571) 272-1606.

Joseph Thomas, TC Director
Technology Center 2800
Semiconductors, Electrical and Optical
Systems and Components

UNITED STATES PATENT AND TRADEMARK OFFICE

Commissioner for Patents
United States Patent and Trademark Office
P.O. Box 1450
Alexandria, VA 22313-1450
www.uspto.gov

BARLEY SNYDER, LLC
1000 WESTLAKES DRIVE, SUITE 275
BERWYN, PA 19312

MAILED

FEB 10 2011

OFFICE OF PETITIONS

In re Application of	:	
Luc Berens, et al.	:	
Application No.: 12/605,917	:	ON PETITION
Filed: October 26, 2009	:	
Attorney Docket No.: 21334-1930 (E-CC-00445US)	:	

This is a decision on the petition, filed February 9, 2011, under 37 CFR 1.313(c)(2) to withdraw the above-identified application from issue after payment of the issue fee.

The petition is **GRANTED**.

The above-identified application is withdrawn from issue for consideration of a submission under 37 CFR 1.114 (request for continued examination). See 37 CFR 1.313(c)(2).

Petitioner is advised that the issue fee paid on January 6, 2011, cannot be refunded. If, however, this application is again allowed, petitioner may request that it be applied towards the issue fee required by the new Notice of Allowance.[1]

Telephone inquiries relating to this decision should be directed to the undersigned at (571) 272-3204.

The application is being referred to Technology Center AU 2833 for further processing of the request for continued examination under 37 CFR 1.114 and for consideration of the concurrently filed Information Disclosure Statement (IDS).

/SDB/

Sherry D. Brinkley
Petitions Examiner
Office of Petitions

[1] *The request to apply the issue fee to the new Notice may be satisfied by completing and returning the new Part B – Fee(s) Transmittal Form (along with any balance due at the time of submission). Petitioner is advised that the Issue Fee Transmittal Form must be completed and timely submitted to avoid abandonment of the application.*

UNITED STATES PATENT AND TRADEMARK OFFICE

Commissioner for Patents
United States Patent and Trademark Office
P.O. Box 1450
Alexandria, VA 22313-1450
www.uspto.gov

Townsend and Townsend and Crew LLP /Pulmonx 017534
Two Embarcadero Center, Eighth Floor
San Francisco CA 94111-3834

MAILED
MAY 20 2011
OFFICE OF PETITIONS

In re Application of	:	
Peter P. Soltesz et al.	:	
Application No. 12/606,007	:	DECISION ON PETITION
Filed: October 26, 2009	:	TO WITHDRAW
Attorney Docket No. **017534-003120US**	:	FROM RECORD
	:	

This is a decision on the Request to Withdraw as attorney or agent of record under 37 CFR § 1.36(b), filed May 10, 2011.

The request is **NOT APPROVED**.

A grantable request to withdraw as attorney/agent of record must be signed by every attorney/agent seeking to withdraw or contain a clear indication that one attorney is signing on behalf of another/others. The Office requires the practitioner(s) requesting withdrawal to certify that he, she, or they have: (1) given reasonable notice to the client, prior to the expiration of the response period, that the practitioner(s) intends to withdraw from employment; (2) delivered to the client or a duly authorized representative of the client all papers and property (including funds) to which the client is entitled; and (3) notified the client of any responses that may be due and the time frame within which the client must respond , pursuant to 37 CFR 10.40.

The request is not approved because the practitioner(s) lacks items (1) (2) and (3) certifications mention above that is required under 37 CFR 10.40. It is also noted, that the request failed to list a correspondence address for either the first named inventor or the assignee of record. Therefore, the request can not be granted at this time we strongly encourage petitioner to use the enclosed Request for Withdrawal as Attorney or Agent and Change of Correspondence Address form PTO/SB/83.

The Office will only accept correspondence address changes to the most current address information provided for the assignee of the entire interest *who properly became of record under 37 CFR 3.71,* or, if no assignee of the entire interest has properly been made of record, the most current address information provided for the first named inventor. 37 CFR 3.71(c) states:

> *An assignee becomes of record either in a national patent application or a reexamination proceeding by filing a statement in compliance with § 3.73(b) that is signed by a party who is authorized to act on behalf of the assignee.*

The assignee must establish its ownership of the patent to the satisfaction of the Director. In this regard, the statement under 37 CFR 3.73(b) must have either: (i) documentary evidence of a chain of title from the original owner to the assignee (*e.g.*, copy of an executed assignment), and a statement affirming that the documentary evidence of the chain of title from the original owner to the assignee was or concurrently is being submitted for recordation pursuant to § 3.11; or (ii) a statement specifying where documentary evidence of a chain of title from the original owner to the assignee is recorded in the assignment records of the Office (*e.g.*, reel and frame number).

All future communications from the Office will continue to be directed to the above-listed address until otherwise notified by applicant.

Telephone inquires concerning this decision should be directed to the undersigned at (571) 272-4584.

JoAnne Burke
Petitions Examiner
Office of Petitions

Attachment: Blank Request for Withdrawal as Attorney or Agent and Change of Correspondence Address (PTO/SB/83) form

UNITED STATES PATENT AND TRADEMARK OFFICE

Commissioner for Patents
United States Patent and Trademark Office
P.O. Box 1450
Alexandria, VA 22313-1450
www.uspto.gov

BLAKELY SOKOLOFF TAYLOR & ZAFMAN LLP
1279 OAKMEAD PARKWAY
SUNNYVALE CA 94085-4040

MAILED

NOV 22 2010

OFFICE OF PETITIONS

In re Application of
Frederick A. Flitsch et al.
Application No. 12/606,012
Filed: October 26, 2009
Attorney Docket No. **2712P021**

DECISION ON PETITION
TO WITHDRAW
FROM RECORD

This is a decision on the Request to Withdraw as attorney or agent of record under 37 CFR § 1.36(b), filed November 5, 2010.

The request is **NOT APPROVED**.

The request still cannot be approved at this present time because the requested change in the correspondence address is improper.

As stated in the previous decision the Office will only accept correspondence address changes to the most current address information provided for the assignee of the entire interest *who properly became of record under 37 CFR 3.71,* or, if no assignee of the entire interest has properly been made of record, the most current address information provided for the first named inventor. 37 CFR 3.71(c) states:

> *An assignee becomes of record either in a national patent application or a reexamination proceeding by filing a statement in compliance with § 3.73(b) that is signed by a party who is authorized to act on behalf of the assignee.*

The assignee must establish its ownership of the patent to the satisfaction of the Director. In this regard, the statement under 37 CFR 3.73(b) must have either: (i) documentary evidence of a chain of title from the original owner to the assignee (*e.g.*, copy of an executed assignment), and a statement affirming that the documentary evidence of the chain of title from the original owner to the assignee was or concurrently is being submitted for recordation pursuant to § 3.11; or (ii) a statement specifying where documentary evidence of a chain of title from the original owner to the assignee is recorded in the assignment records of the Office (*e.g.*, reel and frame number).

Therefore, as there is still currently no Statement under 37 CFR 3.73(b) with the current assignee information of record in the instant application, the Office cannot change the correspondence address to the address on the Request to Withdraw at this present time.

All future communications from the Office will continue to be directed to the above-listed address until otherwise notified by applicant.

Telephone inquires concerning this decision should be directed to JoAnne Burke at 571-272-4584.

/JoAnne Burke/
JoAnne Burke
Petitions Examiner
Office of Petitions

UNITED STATES PATENT AND TRADEMARK OFFICE

Commissioner for Patents
United States Patent and Trademark Office
P.O. Box 1450
Alexandria, VA 22313-1450
www.uspto.gov

GLENN PATENT GROUP
3475 EDISON WAY, SUITE L
MENLO PARK, CA 94025

MAILED

APR 28 2011

OFFICE OF PETITIONS

In re Application of	:	
Tsakhi Segal, et. al.	:	
Application No. 12/606,058	:	DECISION ON PETITION
Filed: October 26, 2009	:	TO WITHDRAW FROM
Attorney Docket No. TEGR0004	:	RECORD

This is a decision on the Request to Withdraw as attorney or agent of record under 37 CFR §§ 1.36(b) or 10.40, filed March 31, 2011.

The request is **NOT APPROVED**.

The request cannot be approved because the requested change in the correspondence address is improper.

The Office will only accept correspondence address changes to the most current address Information provided for the assignee of the entire interest *that properly became of record under 37 CFR 3.71*[1], or, if no assignee of the entire interest has properly been made of record, the most current address information provided for the first named inventor. Therefore, the Office cannot change the correspondence address to the address on the Request to Withdraw at this present time.

All future communications from the Office will continue to be directed to the above-listed address until otherwise notified by applicant.

Telephone inquires concerning this decision should be directed to the undersigned at (571) 272-3226.

Andrea Smith
Petitions Examiner
Office of Petitions

cc: Tegrity, Inc.
2520 Mission College Boulevard – Suite 101
Santa Clara, CA 95054-2904

[1] An assignee becomes of record either in a national patent application or a reexamination proceeding by filing a statement in compliance with § 3.73(b) that is signed by a party who is authorized to act on behalf of the assignee.

UNITED STATES PATENT AND TRADEMARK OFFICE

Commissioner for Patents
United States Patent and Trademark Office
P.O. Box 1450
Alexandria, VA 22313-1450
www.uspto.gov

ROTHWELL, FIGG, ERNST & MANBECK, P.C.
1425 K STREET, N.W.
SUITE 800
WASHINGTON, DC 20005

MAILED

MAY 16 2011

OFFICE OF PETITIONS

In re Application of	:	
Tsakhi Segal, et. al.	:	
Application No. 12/606,058	:	DECISION ON PETITION
Filed: October 26, 2009	:	TO WITHDRAW FROM
Attorney Docket No. TEGR0004	:	RECORD

This is a decision on the renewed Request to Withdraw as attorney or agent of record under 37 CFR §§ 1.36(b) or 10.40, filed May 5, 2011.

The request is **MOOT**.

A review of the file record indicates that power of attorney to any previous power of attorney was revoked by the assignee of the above application on May 10, 2011. Accordingly, the request to withdraw under 37 CFR §§ 1.36(b) or 10.40 is unnecessary.

All future communications from the Office will be directed to the above-listed address until otherwise notified by applicant.

Telephone inquires concerning this decision should be directed to the undersigned at (571) 272-3226.

Andrea Smith
Petitions Examiner
Office of Petitions

cc: GLENN PATENT GROUP
3475 EDISON WAY, SUITE L
MENLO PARK, CA 94025

UNITED STATES PATENT AND TRADEMARK OFFICE

Commissioner for Patents
United States Patent and Trademark Office
P.O. Box 1450
Alexandria, VA 22313-1450
www.uspto.gov

MAILED

DEC 20 2011

OFFICE OF PETITIONS

David A. Testardi
6631 Wakefield Drive., #414
Alexandria, VA 22307

In re Application of	:	
Huy That Anh Ton	:	
Application No. 12/606,177	:	DECISION ON PETITION
Filed: October 26, 2009	:	TO WITHDRAW
Attorney Docket No. ton3	:	FROM RECORD
	:	

This is a decision on the Request to Withdraw as attorney or agent of record under 37 C.F.R. § 1.36(b), filed December 2, 2011.

The request is **moot because a revocation of power of attorney has been filed**.

A review of the file record indicates that the power of attorney to David A. Testardi and all attorneys/agents of associated with customer number 73271 has been revoked by the applicant of the patent application on December 2, 2011. Accordingly, the request to withdraw under 37 C.F.R. § 1.36(b) is moot.

All future communications from the Office will continue to be directed to the below-listed address until otherwise notified by applicant.

Telephone inquires concerning this decision should be directed to Kimberly Inabinet at 571-272-4618.

/Kimberly Inabinet/

Kimberly Inabinet
Petitions Examiner
Office of Petitions

cc: Diederiks & Whitelaw, PLC
13885 Hedgewood Drive, Ste. 317
Woodbridge, VA 22193

UNITED STATES PATENT AND TRADEMARK OFFICE

UNITED STATES DEPARTMENT OF COMMERCE
United States Patent and Trademark Office
Address: COMMISSIONER FOR PATENTS
P.O. Box 1450
Alexandria, Virginia 22313-1450
www.uspto.gov

APPLICATION NO.	FILING DATE	FIRST NAMED INVENTOR	ATTORNEY DOCKET NO.	CONFIRMATION NO.
12/606,300	10/27/2009	Naoki YOSHIDA	P37506	2505

7055 7590 05/03/2011
GREENBLUM & BERNSTEIN, P.L.C.
1950 ROLAND CLARKE PLACE
RESTON, VA 20191

EXAMINER
VO, PETER DUNG BA

ART UNIT	PAPER NUMBER
3718	

NOTIFICATION DATE	DELIVERY MODE
05/03/2011	ELECTRONIC

Please find below and/or attached an Office communication concerning this application or proceeding.

The time period for reply, if any, is set in the attached communication.

Notice of the Office communication was sent electronically on above-indicated "Notification Date" to the following e-mail address(es):

gbpatent@gbpatent.com
pto@gbpatent.com

UNITED STATES PATENT AND TRADEMARK OFFICE

Commissioner for Patents
United States Patent and Trademark Office
P.O. Box 1450
Alexandria, VA 22313-1450
www.uspto.gov

GREENBLUM & BERNSTEIN, P.L.C.
1950 ROLAND CLARKE PLACE
RESTON VA 20191

In re Application of: YOSHIDA, NAOKI Serial No.: 12/606,300 Filed: Oct. 27, 2009 Docket: P37506 Title: VIDEO GAME PROCESSING APPARATUS, METHOD AND COMPUTER PROGRAM PRODUCT OF PROCESSING VIDEO GAME	::	DECISION ON REQUEST TO PARTICIPATE IN PATENT PROSECUTION HIGHWAY (PPH) AND PETITION TO MAKE SPECIAL UNDER 37 CFR 1.102(a)

This is a decision on the request to participate in the Patent Prosecution Highway (PPH) program and the petition under 37 CFR 1.102(a), filed April 29, 2011, to make the above-identified application special.

The request and petition are **GRANTED**.

A grantable request to participate in the PPH program and petition to make special require:

(1) The U.S. application must validly claim priority under 35 U.S.C. 119(a) to one or more corresponding application(s) filed in the JPO or to a PCT application that does not contain any priority claim, or the U.S. application must be a national stage entry of a PCT application that does not contain any priority claim;
(2) Applicant must submit a copy of the allowable/patentable claim(s) from the JPO application(s) along with an English translation thereof and a statement that the English translation is accurate;
(3) All the claims in the U.S. application must sufficiently correspond or be amended to sufficiently correspond to the allowable/patentable claim(s) in the JPO application(s);
(4) Examination of the U.S. application has not begun;
(5) Applicant must submit a copy of all the office actions from each of the JPO application(s) containing the allowable/patentable claim(s) along with an English translation thereof and a statement that the English translation is accurate; and

(6) Applicant must submit an IDS listing the documents cited by the JPO examiner in the JPO office action along with copies of documents except U.S. patents or U.S. patent application publications.

In light of the petition being properly submitted, the request to participate in the PPH program and the petition comply with the above requirements. Accordingly, the above-identified application has been accorded "special" status.

The applicant is encouraged to cite and submit all relevant prior art references, if any, to facilitate examination in this application. This application will be forwarded to an examiner for examination.

Telephone inquiries concerning this decision should be directed to Henry C. Yuen at 571-272-4856. All other inquiries concerning the examination or status of the application should be directed to Peter Vo, SPE of Art Unit 3714, and 571-272-7673 for Class 463/8 and also accessible in the PAIR system at http://www.uspto.gov/ebc.index.html.

Petition is **granted**.

/Henry C. Yuen/

Henry C. Yuen, Special Programs Examiner
Technology Center 3700 – Mechanical Engineering,
Manufacturing and Products
571-272-4856

CERTIFICATION AND REQUEST FOR RELIEF DUE TO EVENTS OF MARCH 11, 2011, IN JAPAN (Page 1 of 2)

Nonprovisional Application Number or Control Number (if applicable): 12606347	Patent Number (if applicable):
First Named Inventor: Kimikazu Saito	Title of Invention: TAPE ADHERING APPARATUS AND TAPE ADHERING METHOD

APPLICANT/PATENTEE/REEXAMINATION PARTY HEREBY CERTIFIES AND REQUESTS THE FOLLOWING FOR THE ABOVE-IDENTIFIED APPLICATION/PATENT/REEXAMINATION PROCEEDING.

1. FOR PATENT APPLICATIONS AND REEXAMINATION PROCEEDINGS PENDING IN THE USPTO AS OF MARCH 11, 2011, IN WHICH A COMMUNICATION FROM THE USPTO IS SOUGHT TO BE REMAILED:

   a. One or more inventors, an assignee, or a correspondence address (for the application/proceeding) is in an area of Japan affected by the earthquake and/or tsunami of March 11, 2011.

   b. A reply or response to an Office action (final, non-final, or other), a notice of allowance, or other Office notice (hereinafter collectively referred to as “Office communication”) is outstanding.

   c. The statutory or non-statutory time period set for response has not yet expired.

   d. Withdrawal and reissuance of the Office communication is requested.

   e. It is acknowledged that if this request is not made within sufficient time so that withdrawal and reissuance of the Office communication occur prior to expiration of the statutory or non-statutory time period (as permitted to be extended under 37 CFR 1.136(a), or as extended under 37 CFR 1.550(c) or 1.956), this request may not be granted.

   f. The need for the reissuance of the Office communication was due to the effects of the earthquake and/or tsunami of March 11, 2011.

   g. This request is being sent via EFS-Web or by mail directed to Mail Stop Petition, Commissioner for Patents, P.O. Box 1450, Alexandria, VA 22313-1450.

2. FOR PATENTEES WHO WERE UNABLE TO TIMELY PAY A PATENT MAINTENANCE FEE DURING THE SIX-MONTH GRACE PERIOD FOLLOWING THE WINDOW TO PAY THE MAINTENANCE FEE:

   a. The original window of time to pay the maintenance fee without the surcharge required by 37 CFR 1.20(h) expired on or after March 11, 2011.

   b. The delay in paying the fee was due to the effects of the earthquake and/or tsunami of March 11, 2011.

   c. The USPTO is requested to *sua sponte* waive the surcharge in 37 CFR 1.20(h) for paying a maintenance fee during the six-month grace period following the window to pay the maintenance fee.

   d. This request and payment of the maintenance fee during the six-month grace period following the window to pay the maintenance fee is being mailed to: Director of the United States Patent and Trademark Office, Attn: Maintenance Fee, 2051 Jamieson Avenue, Suite 300, Alexandria, VA 22314; or being transmitted via facsimile to: 571-273-6500.

CERTIFICATION AND REQUEST FOR RELIEF DUE TO EVENTS OF MARCH 11, 2011, IN JAPAN (Page 2 of 2)

3. FOR PATENTEES WHO NEED TO FILE A PETITION TO ACCEPT A DELAYED MAINTENANCE FEE PAYMENT UNDER 37 CFR 1.378(c):
   a. The maintenance fee payment was required to have been paid after March 10, 2011.
   b. A petition under 37 CFR 1.378(c) (using USPTO form PTO/SB/66 – Petition to Accept Unintentionally Delayed Payment of Maintenance Fee in an Expired Patent (37 CFR 1.378(c))) is being promptly filed accompanied by the applicable maintenance fee payment (but not the surcharge under 37 CFR 1.20(i)).
   c. The delay in payment of the maintenance fee was due to the effects of the earthquake and/or tsunami of March 11, 2011.
   d. The USPTO is requested to *sua sponte* waive the surcharge in 37 CFR 1.20(i) for accepting a delayed maintenance fee payment.
   e. It is acknowledged that the petition to accept a delayed maintenance fee payment under 37 CFR 1.378(c) must be filed by March 11, 2012, in order to be entitled to a waiver of the surcharge under 37 CFR 1.20(i).
   f. It is acknowledged that the petition to accept a delayed maintenance fee payment under 37 CFR 1.378(c) must be filed within twenty-four months from the expiration date of the patent. *See* 35 U.S.C 41(c).
   g. This request and the petition to accept a delayed maintenance fee payment under 37 CFR 1.378(c) is being submitted via EFS-Web or by mail directed to Mail Stop Petition, Commissioner for Patents, P.O. Box 1450, Alexandria, VA 22313-1450.
4. FOR NONPROVISIONAL PATENT APPLICATIONS FILED WITHOUT AN EXECUTED OATH OR DECLARATION OR PAYMENT OF THE BASIC FILING FEE, SEARCH FEE, AND/OR EXAMINATION FEE:
   a. The nonprovisional patent application was filed on or after March 11, 2011, and prior to April 12, 2011.
   b. The late filing of the oath or declaration or the basic filing fee, search fee, or examination fee was due to the effects of the earthquake and/or tsunami of March 11, 2011.
   c. The USPTO is requested to *sua sponte* waive the surcharge set forth in 37 CFR 1.16(f) for the late filing of the oath or declaration or basic filing fee, search fee, and/or examination fee.
   d. This request, together with the executed oath or declaration or the basic filing fee, search fee, or examination fee, as well as the reply to the Notice to File Missing Parts, is being submitted via EFS-Web or by mail directed to Mail Stop Missing Parts, Commissioner for Patents, P.O. Box 1450, Alexandria, VA 22313-1450.

Signature /Mark Montague/	Date April 11, 2011
Name (Print/Typed) Mark Montague	Practitioner Registration Number 36612

***Note**: Signatures of all the inventors, § 1.41(b) applicants, or assignees of record of the entire interest or their representative(s), or reexamination requesters at the appeal stage are required in accordance with 37 CFR 1.33 and 11.18. Please see 37 CFR 1.4(d) for the form of the signature. If necessary, submit multiple forms for more than one signature, see below*.*

☐ *Total of _____ forms are submitted.

Privacy Act Statement

The **Privacy Act of 1974 (P.L. 93-579)** requires that you be given certain information in connection with your submission of the attached form related to a patent application or patent. Accordingly, pursuant to the requirements of the Act, please be advised that: (1) the general authority for the collection of this information is 35 U.S.C. 2(b)(2); (2) furnishing of the information solicited is voluntary; and (3) the principal purpose for which the information is used by the U.S. Patent and Trademark Office is to process and/or examine your submission related to a patent application or patent. If you do not furnish the requested information, the U.S. Patent and Trademark Office may not be able to process and/or examine your submission, which may result in termination of proceedings or abandonment of the application or expiration of the patent.

The information provided by you in this form will be subject to the following routine uses:

1. The information on this form will be treated confidentially to the extent allowed under the Freedom of Information Act (5 U.S.C. 552) and the Privacy Act (5 U.S.C 552a). Records from this system of records may be disclosed to the Department of Justice to determine whether disclosure of these records is required by the Freedom of Information Act.
2. A record from this system of records may be disclosed, as a routine use, in the course of presenting evidence to a court, magistrate, or administrative tribunal, including disclosures to opposing counsel in the course of settlement negotiations.
3. A record in this system of records may be disclosed, as a routine use, to a Member of Congress submitting a request involving an individual, to whom the record pertains, when the individual has requested assistance from the Member with respect to the subject matter of the record.
4. A record in this system of records may be disclosed, as a routine use, to a contractor of the Agency having need for the information in order to perform a contract. Recipients of information shall be required to comply with the requirements of the Privacy Act of 1974, as amended, pursuant to 5 U.S.C. 552a(m).
5. A record related to an International Application filed under the Patent Cooperation Treaty in this system of records may be disclosed, as a routine use, to the International Bureau of the World Intellectual Property Organization, pursuant to the Patent Cooperation Treaty.
6. A record in this system of records may be disclosed, as a routine use, to another federal agency for purposes of National Security review (35 U.S.C. 181) and for review pursuant to the Atomic Energy Act (42 U.S.C. 218(c)).
7. A record from this system of records may be disclosed, as a routine use, to the Administrator, General Services, or his/her designee, during an inspection of records conducted by GSA as part of that agency's responsibility to recommend improvements in records management practices and programs, under authority of 44 U.S.C. 2904 and 2906. Such disclosure shall be made in accordance with the GSA regulations governing inspection of records for this purpose, and any other relevant (*i.e.*, GSA or Commerce) directive. Such disclosure shall not be used to make determinations about individuals.
8. A record from this system of records may be disclosed, as a routine use, to the public after either publication of the application pursuant to 35 U.S.C. 122(b) or issuance of a patent pursuant to 35 U.S.C. 151. Further, a record may be disclosed, subject to the limitations of 37 CFR 1.14, as a routine use, to the public if the record was filed in an application which became abandoned or in which the proceedings were terminated and which application is referenced by either a published application, an application open to public inspection or an issued patent.
9. A record from this system of records may be disclosed, as a routine use, to a Federal, State, or local law enforcement agency, if the USPTO becomes aware of a violation or potential violation of law or regulation.

UNITED STATES PATENT AND TRADEMARK OFFICE

Commissioner for Patents
United States Patent and Trademark Office
P.O. Box 1450
Alexandria, VA 22313-1450
www.uspto.gov

PATENT DOCKET CLERK
COWAN, LIEBOWITZ & LATMAN, P.C.
1133 AVENUE OF THE AMERICAS
NEW YORK NY 10036

MAILED
APR 14 2011
OFFICE OF PETITIONS

In re Application of	:	
Saito et al.	:	
Application No. 12/606,347	:	DECISION ON PETITION
Filed: October 27, 2009	:	
Attorney Docket No. 24530-034	:	

This is a decision on the request filed April 11, 2011, seeking relief under the provisions of an announcement by the Under Secretary and Director of the United States Patent and Trademark Office on March 17, 2011, http://www.uspto.gov/patents/announce/japan_relief_2011mar17.pdf, providing relief to inventors and patent owners in areas affected by the earthquake and resulting tsunami of March 11, 2011.

The request for relief is **GRANTED**.

In the above-identified application, an Office action was mailed on January 12, 2011. The instant petition was filed prior to the expiration of the period for reply and the certifications for granting of relief are considered to be met by the submission of the request.

Telephone inquires concerning this decision should be directed to the undersigned at 571-272-7751. All other inquires concerning either the examination or status of the application should be directed to the Technology Center.

This application is being referred to the Technology Center, Art Unit 1745 for re-mailing the Office action of January 12, 2011. The period for reply will run from the mailing date of the Office action.

/Joan Olszewski/
Joan Olszewski
Petitions Examiner
Office of Petitions

UNITED STATES PATENT AND TRADEMARK OFFICE

Commissioner for Patents
United States Patent and Trademark Office
P.O. Box 1450
Alexandria, VA 22313-1450
www.uspto.gov

E I DU PONT DE NEMOURS AND COMPANY
LEGAL PATENT RECORDS CENTER
BARLEY MILL PLAZA 25/1125
4417 LANCASTER PIKE
WILMINGTON DE 19805

MAILED
JAN 10 2012
OFFICE OF PETITIONS

In re Application of :
Larry Cameron Anthony et al. :
Application No. 12/606,410 : ON PETITION
Filed: October 27, 2009 :
Attorney Docket No. CL4219USNA :

This is a decision on the petition filed December 28, 2011, under 37 CFR 1.181, to withdraw the holding of abandonment.

The petition under 37 CFR 1.181 is **GRANTED**.

The application was held abandoned on February 16, 2011 for failure to file a timely response to the Final Office Action mailed November 15, 2010 within the three (3) month period set for reply. Accordingly, a Notice of Abandonment was mailed December 22, 2011.

Petitioner asserts that in response to the Final Office Action, a timely response was filed March 15, 2011 with a one month extension of time. Submitted as proof is a copy of the response said to have been filed as well as an electronic acknowledgment receipt dated March 15, 2011.

A search of the application file and the USPTO records reveals that in fact, a response was timely filed on March 15, 2011 and is of record. Accordingly, the Notice of Abandonment mailed December 22, 2011 was mailed in error and is hereby withdrawn. No petition fee is due and none has been charged.

This matter is being referred to Technology Center 1652 for treatment of the response filed March 15, 2011.

Telephone inquiries concerning this matter may be directed to the undersigned Petitions Attorney at (571) 272-3212.

Patricia Faison-Ball

Patricia Faison-Ball
Senior Petitions Attorney
Office of Petitions

Doc Code: PET.GREEN
Document Description: Petition for Green Tech Pilot

PTO/SB/420 (11-10)
Approved for use through 01/31/2011. OMB 0651-0062
U.S. Patent and Trademark Office; U. S. DEPARTMENT OF COMMERCE
Under the Paperwork Reduction Act of 1995, no persons are required to respond to a collection of information unless it displays a valid OMB control number.

PETITION TO MAKE SPECIAL UNDER THE GREEN TECHNOLOGY PILOT PROGRAM

Attorney Docket Number: 81197563	Application Number (if known): 12606479	Filing date: 2009-10-27

First Named Inventor: Geoffrey Charles Capon

Title: AN INLET SYSTEM FOR AN ENGINE

APPLICANT HEREBY REQUESTS TO PARTICIPATE IN THE GREEN TECHNOLOGY PILOT PROGRAM FOR THE ABOVE-IDENTIFIED APPLICATION. See Instruction Sheet on page 2.

This petition must be timely filed electronically using the USPTO electronic filing system, EFS-Web.

1. By filing this petition:

   Applicant is requesting early publication: Applicant hereby requests early publication under 37 CFR 1.219 and the publication fee set forth in 37 CFR 1.18(d) accompanies this request.

2. By filing this petition: applicant is agreeing to make an election without traverse in a telephonic interview and elect an invention that meets the eligibility requirements for the Green Technology Pilot Program, if the Office determines that the claims are not obviously directed to a single invention. See Instruction Sheet.

3. This request is accompanied by statements of special status for the eligibility requirement.

4. The application contains no more than three (3) independent claims and twenty (20) total claims.

5. The application does not contain any multiple dependent claims.

6. Other attachments: _____

Signature /David S. Bir/	Date 03-03-2011
Name (Print/Typed) David S. Bir	Registration Number 38383

Note: *Signatures of all the inventors or assignees of record of the entire interest or their representative(s) are required in accordance with 37 CFR 1.33 and 11.18. Please see 37 CFR 1.4(d) for the form of the signature. If necessary, submit multiple forms for more than one signature see below*.*

☐ *Total of ..... forms are submitted.

The information is required to obtain or retain a benefit by the public which is to file (and by the USPTO to process) an application. Confidentiality is governed by 35 U.S.C. 122 and 37 CFR 1.11 and 1.14. This collection is estimated to take 12 hours to complete, including gathering, preparing, and submitting the completed application form to the USPTO. Time will vary depending upon the individual case. Any comments on the amount of time you require to complete this form and/or suggestions for reducing this burden, should be sent to the Chief Information Officer, U.S. Patent and Trademark Office, U.S. Department of Commerce, P.O. Box 1450, Alexandria, VA 22313-1450. DO NOT SEND FEES OR COMPLETED FORMS TO THIS ADDRESS. **SEND TO: Commissioner for Patents, P.O. Box 1450, Alexandria, VA 22313-1450.**

If you need assistance in completing the form, call 1-800-PTO-9199 and select option 2.

Under the Paperwork Reduction Act of 1995, no persons are required to respond to a collection of information unless it displays a valid OMB control number.

Instruction Sheet for Petition to Make Special Under the Green Technology Pilot Program

(Not to be Submitted to the USPTO)

The following is a summary of the requirements (for more information see the notices (i) "Pilot Program for Green Technologies Including Greenhouse Gas Reduction," (ii) "Elimination of Classification Requirement in the Green Technology Pilot Program," and (iii) "Expansion and Extension of the Green Technology Pilot Program," available on the USPTO web site at http://www.uspto.gov/patents/init_events/green_tech.jsp):

1) The application must be a non-reissue, non-provisional utility application filed under 35 U.S.C. 111 (a), or an international application that has entered the national stage in compliance with 35 U.S.C. 371, irrespective of the filing date of the application. Reexamination proceedings are excluded from this pilot program.

2) The application must contain three or fewer independent claims and twenty or fewer total claims. The application must not contain any multiple dependent claims. For an application that contains more than three independent claims or twenty total claims, or multiple dependent claims, applicant must file a preliminary amendment in compliance with 37 CFR 1.121 to cancel the excess claims and/or the multiple dependent claims at the time the petition to make special is filed.

3) The claims must be directed to a single invention that materially enhances the quality of the environment, or that materially contributes to: (1) the discovery or development of renewable energy resources; (2) the more efficient utilization and conservation of energy resources; or (3) green house gas emission reduction (see the eligibility requirements of sections II and III of the notice (i) cited above). The petition must include a statement that, if the USPTO determines that the claims are directed to multiple inventions (e.g., in a restriction requirement), applicant will agree to make an election without traverse in a telephonic interview, and elect an invention that meets the eligibility requirements in section II or III of the notice (i) cited above.

4) The petition to make special must be timely filed electronically using the USPTO electronic filing system, EFS-Web, and selecting the document description of "Petition for Green Tech Pilot" on the EFS-Web screen. Applicant should use form PTO/SB/420, which is available as a Portable Document Format (PDF) fillable form in EFS-Web and on the USPTO Web site.

5) The petition to make special must be filed at least one day prior to the date that a first Office action (which may be an Office action containing only a restriction requirement) appears in the Patent Application Information Retrieval (PAIR) system. Applicant may check the status of the application using PAIR.

6) The petition to make special must be accompanied by a request for early publication in compliance with 37 CFR 1.219 and the publication fee set forth in 37 CFR 1.18(d).

Privacy Act Statement

The **Privacy Act of 1974 (P.L. 93-579)** requires that you be given certain information in connection with your submission of the attached form related to a patent application or patent. Accordingly, pursuant to the requirements of the Act, please be advised that: (1) the general authority for the collection of this information is 35 U.S.C. 2(b)(2); (2) furnishing of the information solicited is voluntary; and (3) the principal purpose for which the information is used by the U.S. Patent and Trademark Office is to process and/or examine your submission related to a patent application or patent. If you do not furnish the requested information, the U.S. Patent and Trademark Office may not be able to process and/or examine your submission, which may result in termination of proceedings or abandonment of the application or expiration of the patent.

The information provided by you in this form will be subject to the following routine uses:

1. The information on this form will be treated confidentially to the extent allowed under the Freedom of Information Act (5 U.S.C. 552) and the Privacy Act (5 U.S.C 552a). Records from this system of records may be disclosed to the Department of Justice to determine whether disclosure of these records is required by the Freedom of Information Act.
2. A record from this system of records may be disclosed, as a routine use, in the course of presenting evidence to a court, magistrate, or administrative tribunal, including disclosures to opposing counsel in the course of settlement negotiations.
3. A record in this system of records may be disclosed, as a routine use, to a Member of Congress submitting a request involving an individual, to whom the record pertains, when the individual has requested assistance from the Member with respect to the subject matter of the record.
4. A record in this system of records may be disclosed, as a routine use, to a contractor of the Agency having need for the information in order to perform a contract. Recipients of information shall be required to comply with the requirements of the Privacy Act of 1974, as amended, pursuant to 5 U.S.C. 552a(m).
5. A record related to an International Application filed under the Patent Cooperation Treaty in this system of records may be disclosed, as a routine use, to the International Bureau of the World Intellectual Property Organization, pursuant to the Patent Cooperation Treaty.
6. A record in this system of records may be disclosed, as a routine use, to another federal agency for purposes of National Security review (35 U.S.C. 181) and for review pursuant to the Atomic Energy Act (42 U.S.C. 218(c)).
7. A record from this system of records may be disclosed, as a routine use, to the Administrator, General Services, or his/her designee, during an inspection of records conducted by GSA as part of that agency's responsibility to recommend improvements in records management practices and programs, under authority of 44 U.S.C. 2904 and 2906. Such disclosure shall be made in accordance with the GSA regulations governing inspection of records for this purpose, and any other relevant (*i.e.*, GSA or Commerce) directive. Such disclosure shall not be used to make determinations about individuals.
8. A record from this system of records may be disclosed, as a routine use, to the public after either publication of the application pursuant to 35 U.S.C. 122(b) or issuance of a patent pursuant to 35 U.S.C. 151. Further, a record may be disclosed, subject to the limitations of 37 CFR 1.14, as a routine use, to the public if the record was filed in an application which became abandoned or in which the proceedings were terminated and which application is referenced by either a published application, an application open to public inspection or an issued patent.
9. A record from this system of records may be disclosed, as a routine use, to a Federal, State, or local law enforcement agency, if the USPTO becomes aware of a violation or potential violation of law or regulation.

UNITED STATES PATENT AND TRADEMARK OFFICE

UNITED STATES DEPARTMENT OF COMMERCE
United States Patent and Trademark Office
Address: COMMISSIONER FOR PATENTS
P.O. Box 1450
Alexandria, Virginia 22313-1450
www.uspto.gov

APPLICATION NO.	FILING DATE	FIRST NAMED INVENTOR	ATTORNEY DOCKET NO.	CONFIRMATION NO.
12/606,479	10/27/2009	Geoffrey Charles Capon	81197563	2822

28395 7590 03/16/2011
BROOKS KUSHMAN P.C./FGTL
1000 TOWN CENTER
22ND FLOOR
SOUTHFIELD, MI 48075-1238

EXAMINER
TRIEU, THAI BA

ART UNIT	PAPER NUMBER
3748	

MAIL DATE	DELIVERY MODE
03/16/2011	PAPER

Please find below and/or attached an Office communication concerning this application or proceeding.

The time period for reply, if any, is set in the attached communication.

UNITED STATES PATENT AND TRADEMARK OFFICE

Commissioner for Patents
United States Patent and Trademark Office
P.O. Box 1450
Alexandria, VA 22313-1450
www.uspto.gov

BROOKS KUSHMAN P.C./FGTL
1000 TOWN CENTER
22ND FLOOR
SOUTHFIELD MI 48075-1238

In re Application of	:	
CAPON, GEOFFREY CHARLES et al	:	DECISION ON PETITION
Application No. 12/606,479	:	TO MAKE SPECIAL UNDER
Filed: Oct. 27, 2009	:	THE GREEN TECHNOLOGY
Attorney Docket No. 81197563	:	PILOT PROGRAM

This is a decision on the petition under 37 CFR 1.102, filed March 7, 2011, to make the above-identified application special under the pilot program for applications pertaining to Green Technologies as set forth in 74 Federal Register Notice 64666 (December 8, 2009) and amended by 75 Federal Register Notice 28554 (May 21, 2010) and 75 Federal Register Notice 69049 (November 10, 2010).

The petition is **granted**.

A grantable petition to make an application special under 37 CFR 1.102 and the pilot program as set forth in 74 FR 64666 must be directed to a nonprovisional application filed under 35 USC 111(a) or be a national stage entry under 35 USC 371, exclusive of any reissue applications.

In order to qualify for special status, the following requirements must be met. 1) The application must have no more than 3 independent claims and no more than 20 total claims. 2) The application must not contain any multiple dependent claims. 3) The petition must state the basis for seeking special status, i.e., the claimed invention either: A) materially enhances the quality of the environment or B) materially contributes to: i) the discovery or development of renewable energy resources, ii) the more efficient utilization and conservation of energy resources, or iii) greenhouse gas emission reduction. 4) If the disclosure is not clear on its face that the claimed invention materially contributes under category (A) or (B), the petition must be accompanied by a statement by the applicant, assignee, or an attorney/agent registered to practice before the Office explaining how the materiality standard is met. 5) A statement that applicant will agree to make an election without traverse in a telephonic interview if a restriction requirement is made by the examiner. 6) The petition to make special must be filed electronically. 7) The petition must be filed at least one day prior to the date that a first Office Action appears in the Patent

Application Information Retrieval (PAIR) system. 8) The petition must be accompanied by a request for early publication in compliance with 37 CFR 1.219 and include the publication fee as set forth in 37 CFR 1.18(d).

The requirement for a fee for consideration of the petition to make special for applications pertaining to Green Technologies has been waived.

The instant petition complies with items 1 – 8 above. Accordingly, the above-identified application has been accorded "special" status.

Telephone inquires concerning this decision should be directed to Henry C. Yuen at 571-272-4856.

This application will be forwarded to the Technology Center Art Unit 3748 for action on the merits commensurate with this decision.

/Henry C. Yuen/

Henry C. Yuen
Quality Assurance Specialist
Technology Center TC 3700

UNITED STATES PATENT AND TRADEMARK OFFICE

Commissioner for Patents
United States Patent and Trademark Office
P.O. Box 1450
Alexandria, VA 22313-1450
www.uspto.gov

FOLEY & LARDNER LLP
111 HUNTINGTON AVENUE
26TH FLOOR
BOSTON, MA 02199-7610

MAILED
DEC 06 2010
OFFICE OF PETITIONS

In re Application of	:	
Eric Bornstein	:	
Application No. 12/606,541	:	ON PETITION
Filed: October 27, 2009	:	
Attorney Docket No. 093991-0208	:	

This is a decision on the petitions filed December 2, 2010 under 37 CFR 1.137(b), to revive the above-identified application and under 37 CFR 1.182 to expedite this petition decision.

The petition under 1.137(b) is **GRANTED.**

The above-identified application became abandoned for failure to reply in a timely manner to the Notice To File Missing Parts of Nonprovisional Application (Notice) mailed December 13, 2009. The Notice set a period for reply of two (2) months from the mail date of the Notice. No extension of time under the provisions of 37 CFR 1.136(a) was obtained. Accordingly, the above-identified application became abandoned on February 14, 2010.

The petition under 37 CFR 1.182 is **GRANTED.**

Telephone inquiries concerning this decision should be directed to Irvin Dingle at (571) 272-3210.

This matter is being referred to the Office of Patent Application Processing.

Irvin Dingle
Petitions Examiner
Office of Petitions

UNITED STATES PATENT AND TRADEMARK OFFICE

UNITED STATES DEPARTMENT OF COMMERCE
United States Patent and Trademark Office
Address: COMMISSIONER FOR PATENTS
P.O. Box 1450
Alexandria, Virginia 22313-1450
www.uspto.gov

APPLICATION NO.	FILING DATE	FIRST NAMED INVENTOR	ATTORNEY DOCKET NO.	CONFIRMATION NO.
12/606,580	10/27/2009	Hwan Hee JEONG	3449-1255PUS1	3014

2292 7590 03/02/2011
BIRCH STEWART KOLASCH & BIRCH
PO BOX 747
FALLS CHURCH, VA 22040-0747

EXAMINER
GURLEY, LYNNE ANN

ART UNIT	PAPER NUMBER
2811	

NOTIFICATION DATE	DELIVERY MODE
03/02/2011	ELECTRONIC

Please find below and/or attached an Office communication concerning this application or proceeding.

The time period for reply, if any, is set in the attached communication.

Notice of the Office communication was sent electronically on above-indicated "Notification Date" to the following e-mail address(es):

mailroom@bskb.com

UNITED STATES PATENT AND TRADEMARK OFFICE

Commissioner for Patents
United States Patent and Trademark Office
P.O. Box 1450
Alexandria, VA 22313-1450
www.uspto.gov

BIRCH STEWART KOLASCH & BIRCH
PO BOX 747
FALLS CHURCH VA 22040-0747

In re Application of	
Hwan Hee JEONG	**: DECISION ON REQUEST TO**
Application No.: 12/606,580	**: PARTICIPATE IN THE PATENT**
Filed: 27 October 2009	**: PROSECUTION HIGHWAY**
Attorney Docket No.: 3449-1255PUS1	**: PROGRAM AND PETITION**
For: SEMICONDUCTOR LIGHT	**: TO MAKE SPECIAL UNDER**
EMITTING DEVICE	**: 37 CFR 1.102(a)**

This is a decision on the request to participate in the Patent Prosecution Highway (PPH) program and the petition under 37 CFR 1.102(a), filed 20 January 2011, to make the above-identified application special.

The request and petition are **GRANTED**.

Discussion

A grantable request to participate in the PPH program and petition to make special require:

1. The U.S. application is

    a. a Paris Convention application which either
        i. validly claims priority under 35 U.S.C. 119(a) and 37 CFR 1.55 to one or more applications filed in the KIPO, or
        ii. validly claims priority under 35 U.S.C. 119(a)/365(a) to a PCT application that contains no priority claims,

    or

    b. a national stage application under the PCT (an application which entered the national stage in the U.S. from a PCT international application after compliance with 35 U.S.C. 371), which PCT application
        i. validly claims priority under 35 U.S.C. 365(b) to an application filed in the KIPO, or
        ii. validly claims priority under 35 U.S.C. 365(b) to a PCT application that contains no priority claims, or
        iii. contains no priority claim,

    or

    c. a so-called bypass application filed under 35 U.S.C. 111(a) which validly claims benefit under 35 U.S.C. 120 to a PCT application, which PCT application

i. validly claims priority under 35 U.S.C. 365(b) to an application filed in the KIPO, or
ii. validly claims priority under 35 U.S.C. 365(b) to a PCT application that contains no priority claims, or
iii. contains no priority claim;

2. Applicant must submit a copy of:
   a. The allowable/patentable claim(s) from the KR application(s);
   b. An English translation of the allowable/patentable claim(s), and
   c. A statement that the English translation is accurate (if the claims were published in a language other than English);
3. Applicant must:
   a. Ensure that all the claims in the U.S. application must sufficiently correspond or be amended to sufficiently correspond to the allowable/patentable claim(s) in the KR application(s), and
   b. Submit a claims correspondence table in English;
4. Examination of the U.S. application has not begun;
5. Applicant must submit:
   a. A copy of all the office actions (which are relevant to patentability), excluding "Decision to Grant a Patent" from each of the KR application(s) containing the allowable/patentable claim(s);
   b. An English language translation of the KIPO office action; and
   c. A statement that the English translation is accurate (if the office actions are not in the English language);
6. Applicant must submit:
   a. An IDS listing the documents cited by the KIPO examiner in the KIPO office action (unless already filed in this application); and
   b. Copies of all the documents cited in the KIPO office action, except U.S. patents or U.S. patent application publications (unless already filed in this application);

The request to participate in the PPH program and petition comply with the above requirements. Accordingly, the above-identified application has been accorded "special" status.

Any response must be submitted via EFS-Web.

Telephone inquiries concerning this decision should be directed to Lee W. Young at 571-272-4549.

All other inquiries concerning the examination or status of the application is accessible in the PAIR system at http://uspto.gov/ebc/index.html.

Lee W. Young
TQAS
Technology Center 2800

UNITED STATES PATENT AND TRADEMARK OFFICE

UNITED STATES DEPARTMENT OF COMMERCE
United States Patent and Trademark Office
Address: COMMISSIONER FOR PATENTS
P.O. Box 1450
Alexandria, Virginia 22313-1450
www.uspto.gov

APPLICATION NO.	FILING DATE	FIRST NAMED INVENTOR	ATTORNEY DOCKET NO.	CONFIRMATION NO.
12/606,617	10/27/2009	Seiji HIDAKA	1033228-000234	3081

7590 09/20/2011
BUCHANAN, INGERSOLL & ROONEY PC
POST OFFICE BOX 1404
ALEXANDRIA, VA 22313-1404

EXAMINER
COKER, ROBERT A

ART UNIT	PAPER NUMBER
3616	

NOTIFICATION DATE	DELIVERY MODE
09/20/2011	ELECTRONIC

DECISION GRANTING PETITION UNDER 37 CFR 1.138(d)

The declaration of express abandonment is recognized

This is in response to the petition under 37 CFR 1.138(d), requesting for a refund of any previously paid search fee and excess claims fee in the above-identified application.

The petition is granted.

The express abandonment is recognized. Any previously paid search fee and excess claims fee are hereby refunded.

Telephone inquiries should be directed to the Office of Data Management at (571) 272-4200.

Patent Publication Branch
Office of Data Management

FORM PET651G (Rev. 08/07)

UNITED STATES PATENT AND TRADEMARK OFFICE

Commissioner for Patents
United States Patent and Trademark Office
P.O. Box 1450
Alexandria, VA 22313-1450
www.uspto.gov

LEE, HONG, DEGERMAN, KANG & WAIMEY
660 S. FIGUEROA STREET
Suite 2300
LOS ANGELES CA 90017

MAILED
MAR 07 2012
OFFICE OF PETITIONS

In re Application of	:	
Jung et al.	:	
Application No. 12/606,623	:	DECISION ON PETITION
Filed: October 27, 2009	:	UNDER 37 CFR 1.78(a)(6)
Attorney Docket No. 2101-3723	:	

This is a decision on the petition under 37 CFR 1.78(a)(6), filed February 24, 2012, to accept an unintentionally delayed claim under 35 U.S.C. §119(e) for the benefit of the prior-filed provisional application set forth in the concurrently filed amendment.

The petition is **GRANTED.**

A petition under 37 CFR 1.78(a)(6) is only applicable to those applications filed on or after November 29, 2000. Further, the petition is appropriate only after expiration of the period specified in 37 CFR 1.78(a)(5)(ii) and must be filed during the pendency of the nonprovisional application. In addition, the petition must be accompanied by:

(1) the reference required by 35 U.S.C. § 119(e) and 37 CFR 1.78(a)(5)(i) to the prior-filed application, unless previously submitted;
(2) the surcharge set forth in § 1.17(t); and
(3) a statement that the entire delay between the date the claim was due under 37 CFR 1.78(a)(5)(ii) and the date the claim was filed was unintentional. The Director may require additional information where there is a question whether the delay was unintentional.

Additionally, the instant nonprovisional application must be pending at the time of filing of the reference to the prior-filed provisional application as required by 37 CFR 1.78(a)(5)(ii). Further, the nonprovisional application claiming the benefit of the prior-filed provisional application must have been filed within twelve months of the filing date of the prior-filed provisional application.

All of the above requirements having been satisfied, the late claim for priority under 35 U.S.C. § 119(e) is accepted as being unintentionally delayed.

The granting of the petition to accept the delayed benefit claim to the prior-filed application under 37 CFR 1.78(a)(6) should not be construed as meaning that this application is entitled

to the benefit of the filing date of the prior-filed application. In order for this application to be entitled to the benefit of the prior-filed application, all other requirements under 35 U.S.C. §119(e) and 37 CFR 1.78(a)(4) and (a)(5) must be met. Similarly, the fact that the corrected Filing Receipt accompanying this decision on petition includes the prior-filed application should not be construed as meaning that applicant is entitled to the claim for benefit of priority to the prior-filed application noted thereon. Accordingly, the examiner will, in due course, consider this benefit claim and determine whether the application is entitled to the benefit of the earlier filing date.

A corrected Filing Receipt, which includes the priority claim to the prior-filed provisional application, accompanies this decision on petition.

Any inquiries concerning this decision may be directed to the undersigned at (571) 272-3230. All other inquiries concerning either the examination procedures or status of the application should be directed to the Technology Center.

The application is being forwarded to Technology Center AU 2617 for consideration by the examiner of the claim under 35 U.S.C. §119(e) for the benefit of priority to the prior-filed provisional application.

Shirene Willis Brantley

Shirene Willis Brantley
Senior Petitions Attorney
Office of Petitions

Attachment: corrected filing receipt

UNITED STATES PATENT AND TRADEMARK OFFICE

UNITED STATES DEPARTMENT OF COMMERCE
United States Patent and Trademark Office
Address: COMMISSIONER FOR PATENTS
P.O. Box 1450
Alexandria, Virginia 22313-1450
www.uspto.gov

APPLICATION NUMBER	FILING or 371(c) DATE	GRP ART UNIT	FIL FEE REC'D	ATTY.DOCKET.NO	TOT CLAIMS	IND CLAIMS
12/606,623	10/27/2009	2617	1220	2101-3723	11	3

CONFIRMATION NO. 3091

CORRECTED FILING RECEIPT

35884
LEE, HONG, DEGERMAN, KANG & WAIMEY
660 S. FIGUEROA STREET
Suite 2300
LOS ANGELES, CA 90017

OC000000052955232

Date Mailed: 03/06/2012

Receipt is acknowledged of this non-provisional patent application. The application will be taken up for examination in due course. Applicant will be notified as to the results of the examination. Any correspondence concerning the application must include the following identification information: the U.S. APPLICATION NUMBER, FILING DATE, NAME OF APPLICANT, and TITLE OF INVENTION. Fees transmitted by check or draft are subject to collection. Please verify the accuracy of the data presented on this receipt. **If an error is noted on this Filing Receipt, please submit a written request for a Filing Receipt Correction. Please provide a copy of this Filing Receipt with the changes noted thereon. If you received a "Notice to File Missing Parts" for this application, please submit any corrections to this Filing Receipt with your reply to the Notice. When the USPTO processes the reply to the Notice, the USPTO will generate another Filing Receipt incorporating the requested corrections**

Applicant(s)

Sung-Hoon Jung, Gyeonggi-Do, KOREA, REPUBLIC OF;
Sung-Duck Chun, Gyeonggi-do, KOREA, REPUBLIC OF;
Seung-June Yi, Gyeonggi-Do, KOREA, REPUBLIC OF;
Young-Dae Lee, Gyeonggi-Do, KOREA,.REPUBLIC OF;
Sung-Jun Park, Gyeonggi-Do, KOREA, REPUBLIC OF;

Assignment For Published Patent Application

LG Electronics Inc.

Power of Attorney: The patent practitioners associated with Customer Number 035884

Domestic Priority data as claimed by applicant

This appln claims benefit of 61/108,866 10/27/2008

Foreign Applications (You may be eligible to benefit from the **Patent Prosecution Highway** program at the USPTO. Please see http://www.uspto.gov for more information.)
REPUBLIC OF KOREA 10-2009-0101948 10/26/2009

Request to Retrieve - This application either claims priority to one or more applications filed in an intellectual property Office that participates in the Priority Document Exchange (PDX) program or contains a proper **Request to Retrieve Electronic Priority Application(s)** (PTO/SB/38 or its equivalent). Consequently, the USPTO will attempt to electronically retrieve these priority documents.

If Required, Foreign Filing License Granted: 11/09/2009

The country code and number of your priority application, to be used for filing abroad under the Paris Convention, is **US 12/606,623**

Projected Publication Date: Not Applicable

Non-Publication Request: No

Early Publication Request: No
Title

RADIO RESOURCE GROUP SELECTION METHOD FOR A RADIO RESOURCE MANAGEMENT

Preliminary Class

455

PROTECTING YOUR INVENTION OUTSIDE THE UNITED STATES

Since the rights granted by a U.S. patent extend only throughout the territory of the United States and have no effect in a foreign country, an inventor who wishes patent protection in another country must apply for a patent in a specific country or in regional patent offices. Applicants may wish to consider the filing of an international application under the Patent Cooperation Treaty (PCT). An international (PCT) application generally has the same effect as a regular national patent application in each PCT-member country. The PCT process **simplifies** the filing of patent applications on the same invention in member countries, but **does not result** in a grant of "an international patent" and does not eliminate the need of applicants to file additional documents and fees in countries where patent protection is desired.

Almost every country has its own patent law, and a person desiring a patent in a particular country must make an application for patent in that country in accordance with its particular laws. Since the laws of many countries differ in various respects from the patent law of the United States, applicants are advised to seek guidance from specific foreign countries to ensure that patent rights are not lost prematurely.

Applicants also are advised that in the case of inventions made in the United States, the Director of the USPTO must issue a license before applicants can apply for a patent in a foreign country. The filing of a U.S. patent application serves as a request for a foreign filing license. The application's filing receipt contains further information and guidance as to the status of applicant's license for foreign filing.

Applicants may wish to consult the USPTO booklet, "General Information Concerning Patents" (specifically, the section entitled "Treaties and Foreign Patents") for more information on timeframes and deadlines for filing foreign patent applications. The guide is available either by contacting the USPTO Contact Center at 800-786-9199, or it can be viewed on the USPTO website at http://www.uspto.gov/web/offices/pac/doc/general/index.html.

For information on preventing theft of your intellectual property (patents, trademarks and copyrights), you may wish to consult the U.S. Government website, http://www.stopfakes.gov. Part of a Department of Commerce initiative, this website includes self-help "toolkits" giving innovators guidance on how to protect intellectual property in specific countries such as China, Korea and Mexico. For questions regarding patent enforcement issues, applicants may call the U.S. Government hotline at 1-866-999-HALT (1-866-999-4158).

LICENSE FOR FOREIGN FILING UNDER

Title 35, United States Code, Section 184

Title 37, Code of Federal Regulations, 5.11 & 5.15

GRANTED

The applicant has been granted a license under 35 U.S.C. 184, if the phrase "IF REQUIRED, FOREIGN FILING LICENSE GRANTED" followed by a date appears on this form. Such licenses are issued in all applications where the conditions for issuance of a license have been met, regardless of whether or not a license may be required as set forth in 37 CFR 5.15. The scope and limitations of this license are set forth in 37 CFR 5.15(a) unless an earlier license has been issued under 37 CFR 5.15(b). The license is subject to revocation upon written notification. The date indicated is the effective date of the license, unless an earlier license of similar scope has been granted under 37 CFR 5.13 or 5.14.

This license is to be retained by the licensee and may be used at any time on or after the effective date thereof unless it is revoked. This license is automatically transferred to any related applications(s) filed under 37 CFR 1.53(d). This license is not retroactive.

The grant of a license does not in any way lessen the responsibility of a licensee for the security of the subject matter as imposed by any Government contract or the provisions of existing laws relating to espionage and the national security or the export of technical data. Licensees should apprise themselves of current regulations especially with respect to certain countries, of other agencies, particularly the Office of Defense Trade Controls, Department of State (with respect to Arms, Munitions and Implements of War (22 CFR 121-128)); the Bureau of Industry and Security, Department of Commerce (15 CFR parts 730-774); the Office of Foreign AssetsControl, Department of Treasury (31 CFR Parts 500+) and the Department of Energy.

NOT GRANTED

No license under 35 U.S.C. 184 has been granted at this time, if the phrase "IF REQUIRED, FOREIGN FILING LICENSE GRANTED" DOES NOT appear on this form. Applicant may still petition for a license under 37 CFR 5.12, if a license is desired before the expiration of 6 months from the filing date of the application. If 6 months has lapsed from the filing date of this application and the licensee has not received any indication of a secrecy order under 35 U.S.C. 181, the licensee may foreign file the application pursuant to 37 CFR 5.15(b).

SelectUSA

The United States represents the largest, most dynamic marketplace in the world and is an unparalleled location for business investment, innovation and commercialization of new technologies. The USA offers tremendous resources and advantages for those who invest and manufacture goods here. Through SelectUSA, our nation works to encourage, facilitate, and accelerate business investment. To learn more about why the USA is the best country in the world to develop technology, manufacture products, and grow your business, visit SelectUSA.gov.

UNITED STATES PATENT AND TRADEMARK OFFICE

Commissioner for Patents
United States Patent and Trademark Office
P.O. Box 1450
Alexandria, VA 22313-1450
www.uspto.gov

Klemchuk Kubasta LLP
8150 North Central Expressway
10th Floor
DALLAS TX 75206

MAILED
JAN 31 2012
OFFICE OF PETITIONS

In re Application of Scot I. Williams Application No. 12/606,737 Filed: October 27, 2009 Attorney Docket No. 121191-1002	: : : : : :	DECISION ON PETITION TO WITHDRAW FROM RECORD

This is a decision on the Request to Withdraw as attorney or agent of record under 37 C.F.R. § 1.36(b), filed January 25, 2012.

The request is **APPROVED**.

A grantable request to withdraw as attorney/agent of record must be signed by every attorney/agent seeking to withdraw or contain a clear indication that one attorney is signing on behalf of another/others. A request to withdraw will not be approved unless at least 30 (thirty) days would remain between the date of approval and the later of the expiration date of a time to file a response or the expiration date of the maximum time period which can be extended under 37 C.F.R. § 1.136(a).

The request was signed by Kelly J. Kubasta on behalf of all attorneys/agents associated with customer number 41804. All attorneys/agents associated with customer number 41804 have been withdrawn.

Applicant is reminded that there is no attorney of record at this time.

The correspondence address has been changed and is copied below.

Telephone inquiries concerning this decision should be directed to Kimberly Inabinet at 571-272-4618.

/Kimberly Inabinet/

Kimberly Inabinet
Petitions Examiner
Office of Petitions

cc: Scott I. Williams
342 Cedar Street
Abilene, TX 79601

UNITED STATES PATENT AND TRADEMARK OFFICE

UNITED STATES DEPARTMENT OF COMMERCE
United States Patent and Trademark Office
Address: COMMISSIONER FOR PATENTS
P.O. Box 1450
Alexandria, Virginia 22313-1450
www.uspto.gov

APPLICATION NUMBER	FILING OR 371(C) DATE	FIRST NAMED APPLICANT	ATTY. DOCKET NO./TITLE
12/606,737	10/27/2009	SCOT I. WILLIAMS	121191-1002

CONFIRMATION NO. 3315

POWER OF ATTORNEY NOTICE

41804
Klemchuk Kubasta LLP
8150 North Central Expressway
10th Floor
DALLAS, TX 75206

OC000000052310945

Date Mailed: 01/31/2012

NOTICE REGARDING CHANGE OF POWER OF ATTORNEY

This is in response to the Power of Attorney filed 01/25/2012.

- The withdrawal as attorney in this application has been accepted. Future correspondence will be mailed to the new address of record. 37 CFR 1.33.

/kainabinet/

Office of Data Management, Application Assistance Unit (571) 272-4000, or (571) 272-4200, or 1-888-786-0101

Doc Code: PET.GREEN
Document Description: Petition for Green Tech Pilot

PTO/SB/420 (05-10)
Approved for use through 05/31/2010. OMB 0651-0062
U.S. Patent and Trademark Office; U. S. DEPARTMENT OF COMMERCE
Under the Paperwork Reduction Act of 1995, no persons are required to respond to a collection of information unless it displays a valid OMB control number.

PETITION TO MAKE SPECIAL UNDER THE GREEN TECHNOLOGY PILOT PROGRAM

Attorney Docket Number: ID0074US	Application Number (if known): 12/606,804	Filing date: October 27, 2009

First Named Inventor: Steven Yanik

Title: BIOMASS CONVERSION PROCESS

APPLICANT HEREBY REQUESTS TO PARTICIPATE IN THE GREEN TECHNOLOGY PILOT PROGRAM FOR THE ABOVE-IDENTIFIED APPLICATION. See Instruction Sheet on page 2.

This petition must be timely filed electronically using the USPTO electronic filing system, EFS-Web.

1. By filing this petition:

   Applicant is requesting early publication: Applicant hereby requests early publication under 37 CFR 1.219 and the publication fee set forth in 37 CFR 1.18(d) accompanies this request.

2. By filing this petition: applicant is agreeing to make an election without traverse in a telephonic interview and elect an invention that meets the eligibility requirements set forth in the notice titled "Pilot Program for Green Technologies Including Greenhouse Gas Reduction," as modified by the notice titled "Elimination of Classification Requirement in the Green Technology Pilot Program," each of which was published in the Federal Register, if the Office determines that the claims are not obviously directed to a single invention.

3. This request is accompanied by statements of special status for the eligibility requirement.

4. The application contains no more than three (3) independent claims and twenty (20) total claims.

5. The application does not contain any multiple dependent claims.

6. Other attachments: _____

Signature /jra/	Date January 19, 2011
Name (Print/Typed) Jeffrey R. Anderson	Registration Number 42,263

***Note**: Signatures of all the inventors or assignees of record of the entire interest or their representative(s) are required in accordance with 37 CFR 1.33 and 11.18. Please see 37 CFR 1.4(d) for the form of the signature. If necessary, submit multiple forms for more than one signature, see below*.*

☐ *Total of _____ forms are submitted.

The information is required to obtain or retain a benefit by the public which is to file (and by the USPTO to process) an application. Confidentiality is governed by 35 U.S.C. 122 and 37 CFR 1.11 and 1.14. This collection is estimated to take 12 hours to complete, including gathering, preparing, and submitting the completed application form to the USPTO. Time will vary depending upon the individual case. Any comments on the amount of time you require to complete this form and/or suggestions for reducing this burden, should be sent to the Chief Information Officer, U.S. Patent and Trademark Office, U.S. Department of Commerce, P.O. Box 1450, Alexandria, VA 22313-1450. DO NOT SEND FEES OR COMPLETED FORMS TO THIS ADDRESS. **SEND TO: Commissioner for Patents, P.O. Box 1450, Alexandria, VA 22313-1450.**

If you need assistance in completing the form, call 1-800-PTO-9199 and select option 2.

Under the Paperwork Reduction Act of 1995, no persons are required to respond to a collection of information unless it displays a valid OMB control number.

Instruction Sheet for Petition to Make Special Under the Green Technology Pilot Program

(Not to be Submitted to the USPTO)

The following is a summary of the requirements (for more information see the notices (i) "Pilot Program for Green Technologies Including Greenhouse Gas Reduction" and (ii) "Elimination of Classification Requirement in the Green Technology Pilot Program," available on the USPTO web site at http://www.uspto.gov/patents/init_events/green_tech.jsp):

(1) The application must be a non-reissue, non-provisional utility application filed under 35 U.S.C. 111(a), or an international application that has entered the national stage in compliance with 35 U.S.C. 371. The application must be previously filed before the publication date of the notice cited above. Reexamination proceedings are excluded from this pilot program.

(2) The application must contain three or fewer independent claims and twenty or fewer total claims. The application must not contain any multiple dependent claims. For an application that contains more than three independent claims or twenty total claims, or multiple dependent claims, applicant must file a preliminary amendment in compliance with 37 CFR 1.121 to cancel the excess claims and/or the multiple dependent claims at the time the petition to make special is filed.

(3) The claims must be directed to a single invention that materially enhances the quality of the environment, or that materially contributes to: (1) the discovery or development of renewable energy resources; (2) the more efficient utilization and conservation of energy resources; or (3) green house gas emission reduction (see the eligibility requirements of sections II and III of the notice (i) cited above). The petition must include a statement that, if the USPTO determines that the claims are directed to multiple inventions (e.g., in a restriction requirement), applicant will agree to make an election without traverse in a telephonic interview, and elect an invention that meets the eligibility requirements in section II or III of the notice (i) cited above.

(4) The petition to make special must be timely filed electronically using the USPTO electronic filing system, EFS-Web, and selecting the document description of "Petition for Green Tech Pilot" on the EFS-Web screen. Applicant should use form PTO/SB/420, which is available as a Portable Document Format (PDF) fillable form in EFS-Web and on the USPTO Web site.

(5) The petition to make special must be filed at least one day prior to the date that a first Office action (which may be an Office action containing only a restriction requirement) appears in the Patent Application Information Retrieval (PAIR) system. Applicant may check the status of the application using PAIR.

(6) The petition to make special must be accompanied by a request for early publication in compliance with 37 CFR 1.219 and the publication fee set forth in 37 CFR 1.18(d).

Privacy Act Statement

The **Privacy Act of 1974 (P.L. 93-579)** requires that you be given certain information in connection with your submission of the attached form related to a patent application or patent. Accordingly, pursuant to the requirements of the Act, please be advised that: (1) the general authority for the collection of this information is 35 U.S.C. 2(b)(2); (2) furnishing of the information solicited is voluntary; and (3) the principal purpose for which the information is used by the U.S. Patent and Trademark Office is to process and/or examine your submission related to a patent application or patent. If you do not furnish the requested information, the U.S. Patent and Trademark Office may not be able to process and/or examine your submission, which may result in termination of proceedings or abandonment of the application or expiration of the patent.

The information provided by you in this form will be subject to the following routine uses:

1. The information on this form will be treated confidentially to the extent allowed under the Freedom of Information Act (5 U.S.C. 552) and the Privacy Act (5 U.S.C 552a). Records from this system of records may be disclosed to the Department of Justice to determine whether disclosure of these records is required by the Freedom of Information Act.
2. A record from this system of records may be disclosed, as a routine use, in the course of presenting evidence to a court, magistrate, or administrative tribunal, including disclosures to opposing counsel in the course of settlement negotiations.
3. A record in this system of records may be disclosed, as a routine use, to a Member of Congress submitting a request involving an individual, to whom the record pertains, when the individual has requested assistance from the Member with respect to the subject matter of the record.
4. A record in this system of records may be disclosed, as a routine use, to a contractor of the Agency having need for the information in order to perform a contract. Recipients of information shall be required to comply with the requirements of the Privacy Act of 1974, as amended, pursuant to 5 U.S.C. 552a(m).
5. A record related to an International Application filed under the Patent Cooperation Treaty in this system of records may be disclosed, as a routine use, to the International Bureau of the World Intellectual Property Organization, pursuant to the Patent Cooperation Treaty.
6. A record in this system of records may be disclosed, as a routine use, to another federal agency for purposes of National Security review (35 U.S.C. 181) and for review pursuant to the Atomic Energy Act (42 U.S.C. 218(c)).
7. A record from this system of records may be disclosed, as a routine use, to the Administrator, General Services, or his/her designee, during an inspection of records conducted by GSA as part of that agency's responsibility to recommend improvements in records management practices and programs, under authority of 44 U.S.C. 2904 and 2906. Such disclosure shall be made in accordance with the GSA regulations governing inspection of records for this purpose, and any other relevant (*i.e.*, GSA or Commerce) directive. Such disclosure shall not be used to make determinations about individuals.
8. A record from this system of records may be disclosed, as a routine use, to the public after either publication of the application pursuant to 35 U.S.C. 122(b) or issuance of a patent pursuant to 35 U.S.C. 151. Further, a record may be disclosed, subject to the limitations of 37 CFR 1.14, as a routine use, to the public if the record was filed in an application which became abandoned or in which the proceedings were terminated and which application is referenced by either a published application, an application open to public inspection or an issued patent.
9. A record from this system of records may be disclosed, as a routine use, to a Federal, State, or local law enforcement agency, if the USPTO becomes aware of a violation or potential violation of law or regulation.

UNITED STATES PATENT AND TRADEMARK OFFICE

UNITED STATES DEPARTMENT OF COMMERCE
United States Patent and Trademark Office
Address: COMMISSIONER FOR PATENTS
P.O. Box 1450
Alexandria, Virginia 22313-1450
www.uspto.gov

APPLICATION NO.	FILING DATE	FIRST NAMED INVENTOR	ATTORNEY DOCKET NO.	CONFIRMATION NO.
12/606,804	10/27/2009	STEVE YANIK	ID0074US	3438

90394 7590 02/01/2011
Kior Inc.
13001 Bay Park Rd.
Pasadena, TX 77507

EXAMINER
BHAT, NINA NMN

ART UNIT	PAPER NUMBER
1771	

MAIL DATE	DELIVERY MODE
02/01/2011	PAPER

Please find below and/or attached an Office communication concerning this application or proceeding.

The time period for reply, if any, is set in the attached communication.

UNITED STATES PATENT AND TRADEMARK OFFICE

Commissioner for Patents
United States Patent and Trademark Office
P.O. Box 1450
Alexandria, VA 22313-1450
www.uspto.gov

2/01/2011

Kior Inc.
13001 Bay Park Rd.
Pasadena TX 77507

In re Application of	:	
Yanik et al.	:	DECISION ON PETITION
Application No. 12/606,804	:	TO MAKE SPECIAL UNDER
Filed: 10/27/2009	:	THE GREEN TECHNOLOGY
Attorney Docket No. **ID0074US**	:	PILOT PROGRAM

This is a decision on the petition under 37 CFR 1.102, filed 1/20/2011, to make the above-identified application special under the pilot program for applications pertaining to Green Technologies as set forth in 74 Federal Register Notice 64666 (December 8, 2009) and amended by 75 Federal Register Notice 28554 (May 21, 2010) and 75 Federal Register Notice 69049 (November 10, 2010).

The petition is **GRANTED**.

A grantable petition to make an application special under 37 CFR 1.102 and the pilot program as set forth in 74 FR 64666 must be directed to a nonprovisional application filed under 35 USC 111(a) or be a national stage entry under 35 USC 371, exclusive of any reissue applications.

In order to qualify for special status, the following requirements must be met. 1) The application must have no more than 3 independent claims and no more than 20 total claims. 2) The application must not contain any multiple dependent claims. 3) The petition must state the basis for seeking special status, i.e., the claimed invention either: A) materially enhances the quality of the environment or B) materially contributes to: i) the discovery or development of renewable energy resources, ii) the more efficient utilization and conservation of energy resources, or iii) greenhouse gas emission reduction. 4) If the disclosure is not clear on its face that the claimed invention materially contributes under category (A) or (B), the petition must be accompanied by a statement by the applicant, assignee, or an attorney/agent registered to practice before the Office explaining how the materiality standard is met. 5) A statement that applicant will agree to make an election without traverse in a telephonic interview if a restriction requirement is made by the examiner. 6) The petition to make special must be filed electronically. 7) The petition must be filed at least one day prior to the date that a first Office Action appears in the Patent Application Information Retrieval (PAIR) system. 8) The petition must be accompanied by a request for early publication in compliance with 37 CFR 1.219 and include the publication fee as set forth in 37 CFR 1.18(d).

The requirement for a fee for consideration of the petition to make special for applications pertaining to Green Technologies has been waived.

The instant petition complies with items 1 – 8 above. Accordingly, the above-identified application has been accorded "special" status.

Telephone inquires concerning this decision should be directed to Tom Dunn at 571-272-1171.

The application is being forwarded to the Technology Center Art Unit 1771 for action on the merits commensurate with this decision.

/Tom Dunn/

Tom Dunn
Quality Assurance Specialist
Technology Center 1700

UNITED STATES PATENT AND TRADEMARK OFFICE

Commissioner for Patents
United States Patent and Trademark Office
P.O. Box 1450
Alexandria, VA 22313-1450
www.uspto.gov

TOWNSEND AND TOWNSEND AND CREW, LLP
TWO EMBARCADERO CENTER
EIGHTH FLOOR
SAN FRANCISCO CA 94111-3834

MAILED
JAN 03 2011
OFFICE OF PETITIONS

In re Application of	:	
Nixon Michaelangelo, et al.	:	DECISION ON PETITION
Application No. 12/606,823	:	TO WITHDRAW
Filed: October 27, 2009	:	FROM RECORD
Attorney Docket No. 028454-001110US	:	

This is a decision on the request to withdraw as attorney of record under 37 CFR § 1.36, filed December 7, 2010.

The request is **NOT APPROVED**.

The request cannot be approved because it lacks a forwarding correspondence address of the first named inventor or a properly intervening assignee.

If the forwarding correspondence address is to the assignee, the Office will only accept correspondence address changes to the most current address information provided for the assignee of the entire interest *that properly became of record under 37 CFR 3.71.* 37 CFR 3.71(c) states:

> *An assignee becomes of record either in a national patent application or a reexamination proceeding by filing a statement in compliance with § 3.73(b) that is signed by a party who is authorized to act on behalf of the assignee.*

The assignee must establish its ownership of the patent to the satisfaction of the Director. In this regard, the statement under 37 CFR 3.73(b) must have either: (i) documentary evidence of a chain of title from the original owner to the assignee (*e.g.*, copy of an executed assignment), and a statement affirming that the documentary evidence of the chain of title from the original owner to the assignee was or concurrently is being submitted for recordation pursuant to § 3.11; or (ii) a statement specifying where documentary evidence of a chain of title from the original owner to the assignee is recorded in the assignment records of the Office (*e.g.*, reel and frame number).

All future communications from the Office will continue to be directed to the above-listed address until otherwise notified by applicant.

Telephone inquires concerning this decision should be directed to the undersigned at (571) 272-2991.

Terri Johnson
Petitions Examiner
Office of Petitions

cc: **MEDQUIST IP LLC**
C/O BUCHANAN INGERSOLL & ROONEY PC
Attn: Bassam N. Ibrahim
1737 King Street, Suite 500
Alexandria, VA 22314-2727

PTO/SB/20PCT-AU (01-11)
Approved for use through 01/31/2012. OMB 0651-0058
U.S. Patent and Trademark Office; U. S. DEPARTMENT OF COMMERCE
Under the Paperwork Reduction Act of 1995, no persons are required to respond to a collection of information unless it displays a valid OMB control number.

REQUEST FOR PARTICIPATION IN THE PATENT COOPERATION TREATY - PATENT PROSECUTION HIGHWAY (PCT-PPH) PILOT PROGRAM BETWEEN THE IP AUSTRALIA (IPAU) AND THE USPTO

Application No:	12/606,852	Filing date:	October 27, 2009
First Named Inventor:	Doyeol AHN		
Title of the Invention:	DETECTION OF MAGNETIC FIELDS USING NANO-MAGNETS		

THIS REQUEST FOR PARTICIPATION IN THE PCT-PPH PILOT PROGRAM ALONG WITH THE REQUIRED DOCUMENTS MUST BE SUBMITTED VIA EFS-WEB. INFORMATION REGARDING EFS-WEB IS AVAILABLE AT HTTP://WWW.USPTO.GOV/EBC/EFS_HELP.HTML

APPLICANT HEREBY REQUESTS PARTICIPATION IN THE PCT-PPH PROGRAM AND PETITIONS TO MAKE THE ABOVE-IDENTIFIED APPLICATION SPECIAL UNDER THE PCT-PPH PROGRAM.

The above-identified application is (1) a national stage entry of the corresponding PCT application, or (2) a national stage entry of another PCT application which claims priority to the corresponding PCT application, or (3) a national application that claims domestic/ foreign priority to the corresponding PCT application, or (4) a national application which forms the basis for the priority claim in the corresponding PCT application, or (5) a continuing application of a U.S. application that satisfies one of (1) to (4) above, or (6) a U.S. application that claims domestic benefit to a U.S. provisional application which forms the basis for the priority claim in the corresponding PCT application.

The corresponding PCT application number(s) is/are: PCT/KR2010/007293

The international filing date of the corresponding PCT application(s) is/are: October 22, 2010

I. List of Required Documents:

a. **A copy of the latest international work product (WO/ISA, WO/IPEA, or IPER) in the above–identified corresponding PCT application(s)**

- [x] Is attached.
- [ ] Is not attached because the document is already in the U.S. application.

b. **A copy of all claims which were indicated as having novelty, inventive step and industrial applicability in the above-identified corresponding PCT application(s).**

- [x] Is attached.
- [ ] Is not attached because the document is already in the U.S. application.

c. **English translations of the documents in a. and b. above are attached (if the documents are not in the English language). A statement that the English translation is accurate is attached for the document in b. above.**

This collection of information is required by 35 U.S.C. 119, 37 CFR 1.55, and 37 CFR 1.102(d). The information is required to obtain or retain a benefit by the public, which is to file (and by the USPTO to process) an application. Confidentiality is governed by 35 U.S.C. 122 and 37 CFR 1.11 and 1.14. This collection is estimated to take 2 hours to complete, including gathering, preparing, and submitting the completed application form to the USPTO. Time will vary depending upon the individual case. Any comments on the amount of time you require to complete this form and/or suggestions for reducing this burden should be sent to the Chief Information Officer, U.S. Patent and Trademark Office, U.S. Department of Commerce, P.O. Box 1450, Alexandria, VA 22313-1450. DO NOT SEND FEES OR COMPLETED FORMS TO THIS ADDRESS.

Approved for use through 01/31/2012. OMB 0651-0058
U.S.Patent and Trademark Office; U.S. DEPARTMENT OF COMMERCE
Under the Paperwork Reduction Act of 1995, no persons are required to respond to a collection of information unless it displays a valid OMB control number.

REQUEST FOR PARTICIPATION IN THE PCT-PPH PILOT PROGRAM BETWEEN THE IPAU AND THE USPTO

(continued)

Application No.:	12/606,852
First Named Inventor:	Doyeol AHN

d. **(1) An information disclosure statement listing the documents cited in the international work products (ISR, WO/ISA, WO/IPEA, IPER) of the corresponding PCT application.**

☐ Is attached

☑ Has already been filed in the above-identified U.S. application on 10/27/2009 & 3/23/2011

(2) Copies of all documents (except) for U.S. patents or U.S. patent application publications)

☐ Are attached.

☑ Have already been filed in the above-identified U.S. application on 10/27/2009 & 3/23/2011

II. Claims Correspondence Table:

Claims in US Application	Patentable Claims in the corresponding PCT Application	Explanation regarding the correspondence
1-19	1-19	Substantially Identical

III. All the claims in the US application sufficiently correspond to the patentable claims in the corresponding PCT application.

Signature /Carl T. Reed, Reg.# 45454/	Date 2011-05-06
Name (Print/Typed) Carl T. Reed	Registration Number 45454

Privacy Act Statement

The **Privacy Act of 1974 (P.L. 93-579)** requires that you be given certain information in connection with your submission of the attached form related to a patent application or patent. Accordingly, pursuant to the requirements of the Act, please be advised that: (1) the general authority for the collection of this information is 35 U.S.C. 2(b)(2); (2) furnishing of the information solicited is voluntary; and (3) the principal purpose for which the information is used by the U.S. Patent and Trademark Office is to process and/or examine your submission related to a patent application or patent. If you do not furnish the requested information, the U.S. Patent and Trademark Office may not be able to process and/or examine your submission, which may result in termination of proceedings or abandonment of the application or expiration of the patent.

The information provided by you in this form will be subject to the following routine uses:

1. The information on this form will be treated confidentially to the extent allowed under the Freedom of Information Act (5 U.S.C. 552) and the Privacy Act (5 U.S.C 552a). Records from this system of records may be disclosed to the Department of Justice to determine whether disclosure of these records is required by the Freedom of Information Act.
2. A record from this system of records may be disclosed, as a routine use, in the course of presenting evidence to a court, magistrate, or administrative tribunal, including disclosures to opposing counsel in the course of settlement negotiations.
3. A record in this system of records may be disclosed, as a routine use, to a Member of Congress submitting a request involving an individual, to whom the record pertains, when the individual has requested assistance from the Member with respect to the subject matter of the record.
4. A record in this system of records may be disclosed, as a routine use, to a contractor of the Agency having need for the information in order to perform a contract. Recipients of information shall be required to comply with the requirements of the Privacy Act of 1974, as amended, pursuant to 5 U.S.C. 552a(m).
5. A record related to an International Application filed under the Patent Cooperation Treaty in this system of records may be disclosed, as a routine use, to the International Bureau of the World Intellectual Property Organization, pursuant to the Patent Cooperation Treaty.
6. A record in this system of records may be disclosed, as a routine use, to another federal agency for purposes of National Security review (35 U.S.C. 181) and for review pursuant to the Atomic Energy Act (42 U.S.C. 218(c)).
7. A record from this system of records may be disclosed, as a routine use, to the Administrator, General Services, or his/her designee, during an inspection of records conducted by GSA as part of that agency's responsibility to recommend improvements in records management practices and programs, under authority of 44 U.S.C. 2904 and 2906. Such disclosure shall be made in accordance with the GSA regulations governing inspection of records for this purpose, and any other relevant (*i.e.*, GSA or Commerce) directive. Such disclosure shall not be used to make determinations about individuals.
8. A record from this system of records may be disclosed, as a routine use, to the public after either publication of the application pursuant to 35 U.S.C. 122(b) or issuance of a patent pursuant to 35 U.S.C. 151. Further, a record may be disclosed, subject to the limitations of 37 CFR 1.14, as a routine use, to the public if the record was filed in an application which became abandoned or in which the proceedings were terminated and which application is referenced by either a published application, an application open to public inspection or an issued patent.
9. A record from this system of records may be disclosed, as a routine use, to a Federal, State, or local law enforcement agency, if the USPTO becomes aware of a violation or potential violation of law or regulation.

PATENT COOPERATION TREATY

From the INTERNATIONAL SEARCHING AUTHORITY

To:

CHA, Seung-Won
14F., Kukdong Building, 60-1
Chungmuro3-ka, Chung-ku,
Seoul 100-705
Republic of Korea

PCT

NOTIFICATION OF TRANSMITTAL OF THE INTERNATIONAL SEARCH REPORT AND THE WRITTEN OPINION OF THE INTERNATIONAL SEARCHING AUTHORITY, OR THE DECLARATION

(PCT Rule 44.1)

	Date of mailing *(day/month/year)* 31 JAN 2011
Applicant's or agent's file reference IVK-A078-PCT	**FOR FURTHER ACTION** See paragraphs 1 and 4 below
International application No. **PCT/KR2010/007293**	International filing date *(day/month/year)* 22 October 2010
Applicant UNIVERSITY OF SEOUL INDUSTRY COOPERATION FOUNDATION et al.	

1. [X] The applicant is hereby notified that the international search report and the written opinion of the International Searching Authority have been established and are transmitted herewith.
Filing of amendments and statement under Article 19:
The applicant is entitled, if he so wishes, to amend the claims of the international application (see Rule 46):
When? The time limit for filing such amendments is normally two months from the date of transmittal of the international search report.
Where? Directly to the International Bureau of WIPO, 34 chemin des Colombettes 1211 Geneva 20, Switzerland, Facsimile No.: +41 22 338 82 70
For more detailed instructions, see *PCT Applicant's Guide*, International Phase, paragraphs 9.004 – 9.011 .

2. [ ] The applicant is hereby notified that no international search report will be established and that the declaration under Article 17(2)(a) to that effect and the written opinion of the International Searching Authority are transmitted herewith.

3. [ ] **With regard to any protest** against payment of (an) additional fee(s) under Rule 40.2, the applicant is notified that:
   - [ ] the protest together with the decision thereon has been transmitted to the International Bureau together with the applicant's request to forward the texts of both the protest and the decision thereon to the designated Offices.
   - [ ] no decision has been made yet on the protest; the applicant will be notified as soon as a decision is made.

4. **Reminders**
The applicant may submit comments on an informal basis on the written opinion of the International Searching Authority to the International Bureau. The International Bureau will send a copy of such comments to all designated Offices unless an international preliminary examination report has been or is to be established. Following the expiration of 30 months from the priority date, these comments will also be made available to the public.
Shortly after the expiration of **18 months** from the priority date, the international application will be published by the International Bureau. If the applicant wishes to avoid or postpone publication, a notice of withdrawal of the international application, or of the priority claim, must reach the International Bureau before the completion of the technical preparations for international publication (Rules 90*bis*.1 and 90*bis*.3).
Within **19 months** from the priority date, but only in respect of some designated Offices, a demand for international preliminary examination must be filed if the applicant wishes to postpone the entry into the national phase **until 30 months** from the priority date (in some Offices even later); otherwise, the applicant must, **within 20 months** from the priority date, perform the prescribed acts for entry into the national phase before those designated Offices.
In respect of other designated Offices, the time limit of **30 months** (or later) will apply even if no demand is filed within 19 months.
For details about the applicable time limits, Office by Office, see www.wipo.int/pct/en/texts/time_limits.html and the *PCT Applicant's Guide*, National Chapters.

Name and mailing address of the ISA/AU AUSTRALIAN PATENT OFFICE PO BOX 200, WODEN ACT 2606, AUSTRALIA E-mail address: pct@ipaustralia.gov.au Facsimile No. +61 2 6283 7999	Authorized officer **PRASHANT SURYANARAYANAN** AUSTRALIAN PATENT OFFICE (ISO 9001 Quality Certified Service) Telephone No. +61 2 6225 6144

PATENT COOPERATION TREATY

PCT

INTERNATIONAL SEARCH REPORT

(PCT Article 18 and Rules 43 and 44)

Applicant's or agent's file reference JVK-A078-PCT	FOR FURTHER ACTION	see Form PCT/ISA/220 as well as, where applicable, item 5 below.
International application No. **PCT/KR2010/007293**	International filing date *(day/month/year)* 22 October 2010	(Earliest) Priority Date *(day/month/year)* 27 October 2009

Applicant

UNIVERSITY OF SEOUL INDUSTRY COOPERATION FOUNDATION et al.

This international search report has been prepared by this International Searching Authority and is transmitted to the applicant according to Article 18. A copy is being transmitted to the International Bureau.

This international search report consists of a total of 4 sheets.

☐ It is also accompanied by a copy of each prior art document cited in this report.

1. **Basis of the report**

a. With regard to the **language**, the international search was carried out on the basis of:

☒ The international application in the language in which it was filed.

☐ A translation of the international application into , which is the language of a translation furnished for the purposes of international search (Rules 12.3(a) and 23.1(b)).

b. ☐ This international search report has been established taking into account the **rectification of an obvious mistake** authorized by or notified to this Authority under Rule 91 (Rule 43.6*bis*(a)).

c. ☐ With regard to any **nucleotide and/or amino acid sequence** disclosed in the international application, see Box No. I.

2. ☐ **Certain claims were found unsearchable** (See Box No. II).

3. ☐ **Unity of invention is lacking** (See Box No. III).

4. With regard to the **title**,

☒ the text is approved as submitted by the applicant.

☐ the text has been established by this Authority to read as follows:

5. With regard to the **abstract**,

☒ the text is approved as submitted by the applicant.

☐ the text has been established, according to Rule 38.2, by this Authority as it appears in Box No. IV. The applicant may, within one month from the date of mailing of this international search report, submit comments to this Authority.

6. With regard to the **drawings**,

a. the figure of the **drawings** to be published with the abstract is Figure No. 1

☒ as suggested by the applicant.

☐ as selected by this Authority, because the applicant failed to suggest a figure.

☐ as selected by this Authority, because this figure better characterizes the invention.

b. ☐ none of the figures is to be published with the abstract.

INTERNATIONAL SEARCH REPORT

International application No.
PCT/KR2010/007293

A. CLASSIFICATION OF SUBJECT MATTER

Int. Cl.

A61B 5/055 (2006.01) ***G01R 33/32*** (2006.01)
G01R 33/20 (2006.01) ***G01R 33/48*** (2006.01)

According to International Patent Classification (IPC) or to both national classification and IPC

B. FIELDS SEARCHED

Minimum documentation searched (classification system followed by classification symbols)

Documentation searched other than minimum documentation to the extent that such documents are included in the fields searched

Electronic data base consulted during the international search (name of data base and, where practicable, search terms used)
EPODOC, WPI, INSPEC, IEEE, ELSEVIER, GOOGLE SCHOLAR, GOOGLE PATENTS and INTERNET with Nano-magnets, MRI, Array, Flux, Induction, Detection, Magnetometer, Coil, Current and similar keywords.

C. DOCUMENTS CONSIDERED TO BE RELEVANT

Category*	Citation of document, with indication, where appropriate, of the relevant passages	Relevant to claim No.
A	WO 2007/118261 A1 (AUSTRIAN RESEARCH CENTERS GMBH) 25 October 2007 See Whole Document esp. Fig 1 and corresponding explanation	
A	US 6 798 200 B2 (FAN) 28 SEPTEMBER 2004 See whole Document esp. Fig 5 and corresponding explanation	
A	US 2008/0221430 A1 (OCHI et al.) 11 SEPTEMBER 2008 See Whole Document	
A	KIM, H. K. et al., 'Faraday's Induction Experiment in Nano-Transformers', IEEE Transaction on Nanotechnology, March 2008, Vol. 7, No. 2, Pages: 120 – 123 See Whole Document	

[X] Further documents are listed in the continuation of Box C [X] See patent family annex

* Special categories of cited documents:
"A" document defining the general state of the art which is not considered to be of particular relevance
"E" earlier application or patent but published on or after the international filing date
"L" document which may throw doubts on priority claim(s) or which is cited to establish the publication date of another citation or other special reason (as specified)
"O" document referring to an oral disclosure, use, exhibition or other means
"P" document published prior to the international filing date but later than the priority date claimed
"T" later document published after the international filing date or priority date and not in conflict with the application but cited to understand the principle or theory underlying the invention
"X" document of particular relevance; the claimed invention cannot be considered novel or cannot be considered to involve an inventive step when the document is taken alone
"Y" document of particular relevance; the claimed invention cannot be considered to involve an inventive step when the document is combined with one or more other such documents, such combination being obvious to a person skilled in the art
"&" document member of the same patent family

Date of the actual completion of the international search
25 January 2011

Date of mailing of the international search report
31 JAN 2011

Name and mailing address of the ISA/AU
AUSTRALIAN PATENT OFFICE
PO BOX 200, WODEN ACT 2606, AUSTRALIA
E-mail address: pct@ipaustralia.gov.au
Facsimile No. +61 2 6283 7999

Authorized officer
PRASHANT SURYANARAYANAN
AUSTRALIAN PATENT OFFICE
(ISO 9001 Quality Certified Service)
Telephone No : +61 2 6225 6144

INTERNATIONAL SEARCH REPORT

International application No.
PCT/KR2010/007293

C (Continuation). DOCUMENTS CONSIDERED TO BE RELEVANT

Category*	Citation of document, with indication, where appropriate, of the relevant passages	Relevant to claim No.
A	COWBURN, R. P. et al., 'Sensing Magnetic Fields Using Superparamagnetic Nanomagnets', Journal of Applied Physics, 1 May 2000, Vol. 87, No. 9, Pages 7082 - 7084 See Whole Document	
A	CHAO, S. et al., 'Nanometer-scale Magnetic Resonance Imaging', Review of Scientific Instruments, May 2004, Vol. 75, No. 5, Pages: 1175 – 1181. See Whole Document	
A	BARBIC, M. et al., 'Magnetic Nanostructures as Amplifiers of Transverse Fields in Magnetic Resonance' September 2005, Vol 28, Iss. 2 - 4, Pages: 91 – 105. See Whole Document	

INTERNATIONAL SEARCH REPORT

Information on patent family members

International application No.
PCT/KR2010/007293

This Annex lists the known "A" publication level patent family members relating to the patent documents cited in the above-mentioned international search report. The Australian Patent Office is in no way liable for these particulars which are merely given for the purpose of information.

Patent Document Cited in Search Report		Patent Family Member					
WO	2007118261	AT	503573	CN	101541410	EP	2004317
		US	2009325822				
US	6798200	US	2003222648				
US	2008221430	JP	2008212505				

Due to data integration issues this family listing may not include 10 digit Australian applications filed since May 2001.

END OF ANNEX

PATENT COOPERATION TREATY

From the:
INTERNATIONAL SEARCHING AUTHORITY

To:

CHA, Seung-Won
14F., Kukdong Building, 60-1
Chungmuro3-ka, Chung-ku,
Seoul 100-705
Republic of Korea

PCT

WRITTEN OPINION OF THE
INTERNATIONAL SEARCHING AUTHORITY

(PCT Rule 43*bis*.1)

Date of mailing *(day/month/year)* 31 JAN 2011

Applicant's or agent's file reference
IVK-A078-PCT

FOR FURTHER ACTION
See paragraph 2 below

International application No.	International filing date *(day/month/year)*	Priority date *(day/month/year)*
PCT/KR2010/007293	22 October 2010	27 October 2009

International Patent Classification (IPC) or both national classification and IPC
Int. Cl.

A61B 5/055 (2006.01) ***G01R 33/32*** (2006.01)
G01R 33/20 (2006.01) ***G01R 33/48*** (2006.01)

Applicant
UNIVERSITY OF SEOUL INDUSTRY COOPERATION FOUNDATION et al.

1. This opinion contains indications relating to the following items:

- [X] Box No. I Basis of the opinion
- [ ] Box No. II Priority
- [ ] Box No. III Non-establishment of opinion with regard to novelty, inventive step and industrial applicability
- [ ] Box No. IV Lack of unity of invention
- [X] Box No. V Reasoned statement under Rule 43*bis*.1(a)(i) with regard to novelty, inventive step and industrial applicability: citations and explanations supporting such statement
- [ ] Box No. VI Certain documents cited
- [ ] Box No. VII Certain defects in the international application
- [X] Box No. VIII Certain observations on the international application

2. **FURTHER ACTION**

If a demand for international preliminary examination is made, this opinion will be considered to be a written opinion of the International Preliminary Examining Authority ("IPEA") except that this does not apply where the applicant chooses an Authority other than this one to be the IPEA and the chosen IPEA has notified the International Bureau under Rule 66.1*bis*(b) that written opinions of this International Searching Authority will not be so considered.

If this opinion is, as provided above, considered to be a written opinion of the IPEA, the applicant is invited to submit to the IPEA a written reply together, where appropriate, with amendments, before the expiration of 3 months from the date of mailing of Form PCT/ISA/220 or before the expiration of 22 months from the priority date, whichever expires later.

For further options, see Form PCT/ISA/220.

3. For further details, see notes to Form PCT/ISA/220.

Name and mailing address of the ISA	Date of completion of this opinion	Authorized Officer
AUSTRALIAN PATENT OFFICE PO BOX 200, WODEN ACT 2606, AUSTRALIA E-mail address: pct@ipaustralia.gov.au Facsimile No. +61 2 6283 7999	25 January 2011	**PRASHANT SURYANARAYANAN** AUSTRALIAN PATENT OFFICE (ISO 9001 Quality Certified Service) Telephone No. +61 2 6225 6144

WRITTEN OPINION OF THE INTERNATIONAL SEARCHING AUTHORITY

International application No.
PCT/KR2010/007293

Box No. I Basis of this opinion

1. With regard to the **language**, this opinion has been established on the basis of:

   [X] The international application in the language in which it was filed

   [ ] A translation of the international application into, , which is the language of a translation furnished for the purposes of international search (under Rules 12.3(a) and 23.1(b)).

2. [ ] This opinion has been established taking into account **the rectification of an obvious mistake** authorized by or notified to this Authority under Rule 91 (Rule 43*bis*.1(a))

3. With regard to any **nucleotide and/or amino acid sequence** disclosed in the international application, this opinion has been established on the basis of a sequence listing filed or furnished:

   a. (means)

   [ ] on paper

   [ ] in electronic form

   b. (time)

   [ ] in the international application as filed

   [ ] together with the international application in electronic form

   [ ] subsequently to this Authority for the purposes of search

4. [ ] In addition, in the case that more than one version or copy of a sequence listing has been filed or furnished, the required statements that the information in the subsequent or additional copies is identical to that in the application as filed or does not go beyond the application as filed, as appropriate, were furnished.

5. Additional comments:

WRITTEN OPINION OF THE INTERNATIONAL SEARCHING AUTHORITY

International application No.
PCT/KR2010/007293

Box No. V **Reasoned statement under Rule 43*bis*.1(a)(i) with regard to novelty, inventive step or industrial applicability; citations and explanations supporting such statement**

1. Statement

Novelty (N)	Claims	**1 - 19**	**YES**
	Claims	**NONE**	**NO**
Inventive step (IS)	Claims	**1 - 19**	**YES**
	Claims	**NONE**	**NO**
Industrial applicability (IA)	Claims	**1 - 19**	**YES**
	Claims	**NONE**	**NO**

2. Citations and explanations:

The following documents identified in the International Search Report have been considered for the purposes of this report:

D1: WO 2007/118261 A1
D2: US 6 798 200 B2
D3: US 2008/0221430 A1
D4: KIM, H. K. et al.
D5: COWBURN, R. P. et al.
D6: CHAO, S. et al.
D7: BARBIC, M. et al.

NOVELTY (N)

Claims 1 - 19 meet the criteria set forth in PCT Article 33(2) for novelty. The closest prior art, D1, published before the priority date does not disclose a second set of nano-magnets operable to induce a first electrical signal in response to a magnetic resonance signal.

INVENTIVE STEP (IS)

Claims 1 - 19 meet the criteria set out in PCT Article 33(3) with regard to the requirement of Inventive Step because the prior art does not obviously suggest to a person skilled in the art to include a second set of nano-magnets operable to induce a first electrical signal in response to a magnetic resonance signal.

INDUSTRIAL APPLICABILITY (IA)

The invention defined in the claims 1 - 19 is considered to meet the requirements of Industrial Applicability under Article 33(4) of the PCT because it can be made by, or used in, industry.

WRITTEN OPINION OF THE INTERNATIONAL SEARCHING AUTHORITY

International application No.

PCT/KR2010/007293

Box No. VIII Certain observations on the international application

The following observations on the clarity of the claims, description, and drawings or on the question whether the claims are fully supported by the description, are made:

Independent claims 1 & 17 do not meet the requirements of Article 6 of the PCT because they are not fully supported by the description. Claims are not fully supported if their subject matter is different to the subject matter of the description. The claims are inconsistent with the description because they omit one or more features that the description indicates is intrinsic to the invention. Claims 1 and 17 define a device for detecting a magnetic field using two sets of nano-magnet arrays. The claims however does not include *a source connected to apply a electrical signal* to the first set of nano-magnet array and a detector connected *to sense the first electrical signal induced* in the second nano-magnet array. In the absence of these two features the invention claimed is broader than it is justified in the description.

Australian Government
IP Australia

Discovery House, Phillip ACT 2606
PO Box 200, Woden ACT 2606
Australia
Phone: 1300 651 010
International Callers: +61-2 6283 2999
Facsimile: +61-2 6283 7999
Email: assist@ipaustralia.gov.au
Website: www.ipaustralia.gov.au

Dear Applicant,

This International Searching Authority will, upon receipt of payment of AU$50.00 per citation, promptly transmit the requested documents which were cited in the International Search Report established on the International Application.

Please email salesteam@ipaustralia.gov.au if any cited documents are required.

Regards
PCT Administration

Claims from corresponding PCT International Application No. PCT/KR2010/007293

Claims

[Claim 1] A device for detecting a magnetic field comprising:
a first set of nano-magnets operable to induce a radio frequency (RF) magnetic field; and
a second set of nano-magnets operable to induce a first electrical signal in response to a magnetic resonance signal caused by the RF magnetic field.

[Claim 2] The device of claim 1, further comprising a detector configured to detect the first electrical signal.

[Claim 3] The device of claim 1, further comprising a source configured to apply a second electrical signal to the first set of nano-magnets.

[Claim 4] The device of claim 1, wherein the first set of nano-magnets and the second set of nano-magnets are arranged in a two-dimensional array.

[Claim 5] The device of claim 1, wherein the RF magnetic field excites spins of a target disposed between the first set of nano-magnets and the second set of nano-magnets, and wherein the magnetic resonance signal is generated in response to the excited spins.

[Claim 6] The device of claim 1, wherein each nano-magnet of the first and second sets comprises a material selected from the group consisting of ferromagnetic metals, transition metals, and single-molecule magnets.

[Claim 7] The device of claim 1, further comprising:
a negative refractive index medium positioned between the first and second sets of nano-magnets and operable to convert the magnetic resonance signal into a sub-wavelength focused magnetic field signal, wherein the second set of nano-magnets is operable to induce the first electrical signal in response to the sub-wavelength focused magnetic field signal.

[Claim 8] The device of claim 7, wherein the RF magnetic field excites spins of a target disposed between the first set of nano-magnets and the negative refractive index medium, and wherein the magnetic resonance signal is generated in response to the excited spins of the target.

[Claim 9] A magnetic resonance imaging ("MRI") device comprising:
the device of claim 1 configured to detect the RF magnetic field;
a detector configured to detect the first electrical signal;
a source configured to apply a second electrical signal to the first set of nano-magnets;
a controller, coupled to both the source and a data processing unit,

configured to instruct the source to apply the second electrical signal to the first set of nano-magnets and the data processing unit to collect data related to the first electrical signal; and
the data processing unit configured to create images for display based on the collected data.

[Claim 10] The MRI device of claim 9, further comprising:
a negative refractive index medium that is positionedbetween the first and second sets of nano-magents and configured to convert the magnetic resonance signal into a sub-wavelength focused magnetic field signal,
wherein the second set of nano-magnets is operable to induce the first electrical signal in response to the sub-wavelength focused magnetic field signal.

[Claim 11] The MRI device of claim 9, wherein the RF magnetic field excites spins of a target disposed between the first set of nano-magnets and the second set of nano-magnets, andwherein the magnetic resonance signal is generated in response to the excited spins.

[Claim 12] The MRI device of claim 9, wherein the RF magnetic field is between approximately 0.2 and 3 Tesla.

[Claim 13] The MRI device of claim 11, wherein the spins of the target are resonant at a frequency between approximately 8.5 and 128 MHz.

[Claim 14] The MRI device of claim 10, wherein the RF magnetic field excites spins of a target disposed between the first set of nano-magnets and the negative refractive index medium, and wherein the magnetic resonance signal is generated in response to the excited spins of the target.

[Claim 15] The MRI device of claim 10, wherein the RF magnetic field is between approximately 0.2 and 3 Tesla.

[Claim 16] The MRI device of claim 14, wherein the spins of the target are resonant at a frequency between approximately 8.5 and 128 MHz.

[Claim 17] A method for detecting magnetic field comprising:
generating a RF magnetic field from a first set of nano-magnets;
exciting spins of a target based on the RF magnetic field;
generating a magnetic resonance signal from the excited spins of the target; and
inducing a first electrical signal based on the magnetic resonance signal at a second set of nano-magnets.

[Claim 18] The method of claim 17, wherein the generating RF magnetic field comprises applying a second electrical signal to the first set of nano-

magnets and inducing the RF magnetic field based on the second electrical signal at the first set of nano-magnets.

[Claim 19] The method of claim 17 further comprising:

converting the magnetic resonance signal into a sub-wavelength focused magnetic field signal prior to inducing the first electrical signal,

wherein inducing the first electrical signal is performed based on the sub-wavelength focused magnetic field signal.

UNITED STATES PATENT AND TRADEMARK OFFICE

UNITED STATES DEPARTMENT OF COMMERCE
United States Patent and Trademark Office
Address: COMMISSIONER FOR PATENTS
P.O. Box 1450
Alexandria, Virginia 22313-1450
www.uspto.gov

APPLICATION NO.	FILING DATE	FIRST NAMED INVENTOR	ATTORNEY DOCKET NO.	CONFIRMATION NO.
12/606,852	10/27/2009	Doyeol Ahn	18122.42	3524

13984 7590 05/24/2011
Workman Nydegger / INVENTION DEVELOPMENT FUND
60 East South Temple
1000 Eagle Gate Towe
Salt Lake City, UT 84111

EXAMINER
KOVAL, MELISSA J

ART UNIT	PAPER NUMBER
2858	

MAIL DATE	DELIVERY MODE
05/24/2011	PAPER

Please find below and/or attached an Office communication concerning this application or proceeding.

The time period for reply, if any, is set in the attached communication.

UNITED STATES PATENT AND TRADEMARK OFFICE

Commissioner for Patents
United States Patent and Trademark Office
P.O. Box 1450
Alexandria, VA 22313-1450
www.uspto.gov

Workman Nydegger / INVENTION DEVELOPMENT FUND
60 East South Temple
1000 Eagle Gate Towe
Salt Lake City UT 84111

In re Application of	
Doyeol AHN	**: DECISION ON REQUEST TO**
Application No.: 12/606,852	**: PARTICIPATE IN THE PATENT**
Filed: 27 October 2009	**: PROSECUTION HIGHWAY**
Attorney Docket No.: 18122.42	**: PROGRAM AND PETITION**
For: DETECTION OF MAGNETIC	**: TO MAKE SPECIAL UNDER**
FIELDS USING NANO-MAGNETS	**: 37 CFR 1.102(a)**

This is a decision on the request to participate in the PCT Patent Prosecution Highway (PCT-PPH) pilot program and the petition under 37 CFR 1.102(a), filed on 06 May 2011, to make the above-identified application special.

The request and petition are **DISMISSED**.

Discussion

A grantable request to participate in the PCT-PPH pilot program and petition to make special require:

(1) The U.S. application must have an eligible relationship to one or more PCT applications where the ISA or IPEA are the JPO, EPO, KIPO, IPAU, Russia, Spain, Finland, Austria, or USPTO;

(2) At least one claim in the PCT application has novelty, inventive step, and industrial applicability and must be free of any observations in Box VIII in the latest work product in the international stage or applicant must identify and explain why the claim(s) is/are not subject to the observation in Box VIII;

(3) Applicant must submit a copy of the claim(s) from the PCT application(s) that have novelty, inventive step, and industrial applicability along with an English translation thereof and a statement that the English translation is accurate, if the claims are not in the English language;

(4) All the claims in the U.S. application must sufficiently correspond or be amended to sufficiently correspond to the claim(s) that have novelty, inventive step, and industrial applicability in the PCT application(s);

(5) Examination of the U.S. application has not begun;

(6) Applicant must submit a copy of the latest international work product from the PCT application indicating that the claim(s) have novelty, inventive step, and industrial applicability along with an English translation thereof.

(7) Applicant must submit an IDS listing the documents cited by the PCT examiner in the international work product along with copies of documents except U.S. patents or U.S. patent application publications.

(8) Applicant is required to submit a claims correspondence table in English which indicates how all the claims in the U.S. application correspond to the claims indicated as having novelty, inventive step and industrial applicability in the latest international work product.

Requirements (1) and (3-8) above are considered to have been met. However, the request to participate in the PPH pilot program and petition fails meet requirement (2).

Regarding the requirement of condition (2), applicant has failed to identify and explain why the claims are not subject to the observation in Box VIII of the Written Opinion (ISA/237).

Applicant is given **ONE** opportunity within a time period of **ONE MONTH or THIRTY DAYS**, whichever is longer, from the mailing date of this decision to correct the deficiencies. **NO EXTENSION OF TIME UNDER 37 CFR 1.136 IS PERMITTED.** If the deficiencies are not corrected with the time period given, the application will await action in its regular turn.

Response must be filed via the Electronic Filing System (EFS) using the document description: Petition to make special under PCT – Patent Pros Hwy. Any preliminary amendments and IDS submitted with the PPH documents must be separately indexed as a preliminary amendment and IDS, respectively.

Telephone inquiries concerning this decision should be directed to Lee W. Young at 571-272-4549.

All other inquiries concerning the examination or status of the application is accessible in the PAIR system at http://www.uspto.gov/ebc/index.html.

Lee W. Young
TQAS Technology Center 2800 - Semiconductors,
Electrical & Optical Systems & Components

PATENT APPLICATION
Docket No. 18122.42

IN THE UNITED STATES PATENT AND TRADEMARK OFFICE

In re application of	Doyeol AHN	)
		)
Serial No.:	12/606,852	) Art Unit
		) 2858
Filed:	October 27, 2009	)
		)
Conf. No.:	3524	)
		)
For:	DETECTION OF MAGNETIC FIELDS USING NANO-MAGNETS	)
		)
Examiner:	Melissa J. Koval	)
		)
Customer No.:	13984	)

PETITION TO MAKE SPECIAL UNDER PCT-PATENT PROS HWY

Via eFILE
Commissioner for Patents
PO Box 1450
Alexandria, Virginia 22313-1450

Dear Sir:

Remarks/Arguments begin on page 2 of this paper.

REMARKS

This paper is in response to the dismissal of the request to participate in the patent prosecution highway program and to make special under 37 CFR 1.102(a) mailed May 24, 2011 for failure of Applicants to explain why the pending claims are not subject to the observations made in Box VIII of the Written Opinion. Applicants herein correct the deficiencies of the request to participate in the patent prosecution highway program and respectfully request that the dismissal be withdrawn in light of the following comments.

Box VIII of the Written Opinion states that the pending claims do not include what the International Searching Authority deems as the essential elements of a "source" and a "detector" and thus the pending claims are broader than is justified by the specification. Applicants traverse this finding as not complying with US patent law.

MPEP 2163 and *Gentry Gallery, Inc. v. Berkline Corp.*, 134 F.3d 1473, 45 USPQ2d 1498 (Fed. Cir. 1998), discuss when an omitted claim element can raise an issue regarding whether the inventor had possession of a broader, more generic invention. According to *Gentry Gallery*, the court's determination that the patent disclosure did not support a broad meaning for the disputed claim terms was premised on clear statements in the written description that described the location of a claim element--the 'control means' --as 'the only possible location' and that variations were 'outside the stated purpose of the invention.' The court then considered the situation where the patent's disclosure makes crystal clear that a particular (i.e., narrow) understanding of a claim term is an 'essential element of the inventor's invention. *Gentry Gallery*, 134 F.3d at 1479, 45 USPQ2d at 1503. Thus, *Gentry Gallery* lays out a rule that states that a claim that omits an element which applicant describes as an essential or critical feature of the invention originally disclosed does not comply with the written description requirement.

Applicants note that pending claims of the present application do not violate the rule articulated in *Gentry Gallery* as the originally filed specification does not describe the allegedly omitted "source" and "detector" as essential or critical. For example, claims 1 and 17, which as originally filed constitute part of the original specification, discuss a device for detecting a magnetic field that comprises a first set of nano-magnets that is **operable** to induce a radio frequency magnetic field and that a second set of nano-magnets that is **operable** to induce an electric field in response to the magnetic field. Thus, by use of the term "**operable**", the specification states that the first and second sets of nano-magnets are able to or configured to induce the magnetic or electric signals even if no source is actually applied to the nano-magnets.

Applicants also note that paragraphs 18-24 of the originally filed specification describe various embodiments of the first and/or second set of nano-magnets and various sources that may be applied to the first and/or second set of nano-magnets. Thus, these paragraphs, since different embodiments are discussed, do not state or even imply that the allegedly omitted "source" is essential or critical. Accordingly, the originally filed specification clearly contemplates a device for detecting a magnetic field that is operable to induce magnetic or electric signals without having to actually be connected to a source and thus a "source" is not an omitted element.

Regarding the allegedly omitted "detector", Applicants note that paragraph 25 of the originally filed specification clearly states that "the device 100 may **optionally** include a detector 140 to detect the magnetic resonance signal." Thus, rather than stating that a detector is essential or critical, the specification clearly states that a detector is not essential or critical, but is optional. Accordingly, the originally filed specification clearly contemplates a device for detecting a magnetic field that does not include a detector and thus a "detector" is not an omitted element.

In view of the forgoing, Applicants state that claims as now pending do not include any omitted elements under US patent law. That is, the originally filed specification does not include any statements or disclosure that would, under the test set out in *Gentry Gallery*, lead one of skill in the art to determine that a "source" and a "detector" are essential to the claimed invention. Accordingly, the observations made in Box VIII of the Written Opinion do not apply to the pending claims and the request to participate in the patent prosecution highway program and to make special under 37 CFR 1.102(a) should be granted.

In the event that the Examiner finds remaining impediments to a prompt granting of this petition that may be clarified through a telephone interview, the Examiner is requested to contact the undersigned attorney.

DATED this 15th day of June 2011.

Respectfully submitted,

/Shane K. Jensen/ Registration # 55,301

SHANE K. JENSEN
Registration No. 55,301
Attorney for Applicant
Customer No. 13984
Telephone No. 801-533-9800

UNITED STATES PATENT AND TRADEMARK OFFICE

UNITED STATES DEPARTMENT OF COMMERCE
United States Patent and Trademark Office
Address: COMMISSIONER FOR PATENTS
P.O. Box 1450
Alexandria, Virginia 22313-1450
www.uspto.gov

APPLICATION NO.	FILING DATE	FIRST NAMED INVENTOR	ATTORNEY DOCKET NO.	CONFIRMATION NO.
12/606,852	10/27/2009	Doyeol Ahn	18122.42	3524

13984 7590 06/27/2011
Workman Nydegger / INVENTION DEVELOPMENT FUND
60 East South Temple
1000 Eagle Gate Towe
Salt Lake City, UT 84111

EXAMINER
KOVAL, MELISSA J

ART UNIT	PAPER NUMBER
2858	

MAIL DATE	DELIVERY MODE
06/27/2011	PAPER

Please find below and/or attached an Office communication concerning this application or proceeding.

The time period for reply, if any, is set in the attached communication.

UNITED STATES PATENT AND TRADEMARK OFFICE

Commissioner for Patents
United States Patent and Trademark Office
P.O. Box 1450
Alexandria, VA 22313-1450
www.uspto.gov

Workman Nydegger / INVENTION DEVELOPMENT FUND
60 East South Temple
1000 Eagle Gate Towe
Salt Lake City UT 84111

In re Application of	
Doyeol AHN	**: DECISION ON REQUEST TO**
Application No.: 12/606,852	**: PARTICIPATE IN THE PATENT**
Filed: 27 October 2009	**: PROSECUTION HIGHWAY**
Attorney Docket No.: 18122.42	**: PROGRAM AND PETITION**
For: DETECTION OF MAGNETIC	**: TO MAKE SPECIAL UNDER**
FIELDS USING NANO-MAGNETS	**: 37 CFR 1.102(a)**

This is a decision on the request to participate in the PCT Patent Prosecution Highway (PCT-PPH) pilot program and the petition under 37 CFR 1.102(a), filed on 06 May 2011 and renewed 06 June 2011, to make the above-identified application special.

The request and petition are **GRANTED**.

Discussion

A grantable request to participate in the PCT-PPH pilot program and petition to make special require:

(1) The U.S. application must have an eligible relationship to one or more PCT applications where the ISA or IPEA are the JPO, EPO, KIPO, or USPTO;

(2) At least one claim in the PCT application has novelty, inventive step, and industrial applicability and must be free of any observations in Box VIII in the latest work product in the international stage or applicant must identify and explain why the claim(s) is/are not subject to the observation in Box VIII;

(3) Applicant must submit a copy of the claim(s) from the PCT application(s) that have novelty, inventive step, and industrial applicability along with an English translation thereof and a statement that the English translation is accurate, if the claims are not in the English language;

(4) All the claims in the U.S. application must sufficiently correspond or be amended to sufficiently correspond to the claim(s) that have novelty, inventive step, and industrial applicability in the PCT application(s);

(5) Examination of the U.S. application has not begun;

(6) Applicant must submit a copy of the latest international work product from the PCT application indicating that the claim(s) have novelty, inventive step, and industrial applicability

along with an English translation thereof and a statement that the English translation is accurate if the latest international work product is not in the English language;

(7) Applicant must submit an IDS listing the documents cited by the PCT examiner in the international work product along with copies of documents except U.S. patents or U.S. patent application publications.

The request to participate in the PCT-PPH pilot program and petition comply with the above requirements. Accordingly, the above-identified application has been accorded "special" status.

Telephone inquiries concerning this decision should be directed to Lee W. Young at 571-272-4549.

All other inquiries concerning the examination or status of the application is accessible in the PAIR system at http://www.uspto.gov/ebc.index.html.

This application will be forwarded to the examiner for action on the merits commensurate with this decision once this application's formality reviews have been completed.

Lee W. Young
TQAS Technology Center 2800 - Semiconductors,
Electrical & Optical Systems & Components

UNITED STATES PATENT AND TRADEMARK OFFICE

Commissioner for Patents
United States Patent and Trademark Office
P.O. Box 1450
Alexandria, VA 22313-1450
www.uspto.gov

STAAS & HALSEY LLP
SUITE 700
1201 NEW YORK AVENUE, N.W.
WASHINGTON DC 20005

MAILED
MAR 23 2011
OFFICE OF PETITIONS

In re Application of	:	
David S. Dyer, et al.	:	DECISION ON PETITION
Application No. 12/606,868	:	TO WITHDRAW
Filed: October 27, 2009	:	FROM RECORD
Attorney Docket No. **2138.1001**	:	

This is a decision on the request to withdraw as attorney of record under 37 CFR § 1.36, filed February 10, 2011.

The request is **NOT APPROVED**.

The request cannot be approved because it lacks a forwarding correspondence address of the first named inventor or a properly intervening assignee.

If the forwarding correspondence address is to the assignee, the Office will only accept correspondence address changes to the most current address information provided for the assignee of the entire interest *that properly became of record under 37 CFR 3.71.* 37 CFR 3.71(c) states:

> *An assignee becomes of record either in a national patent application or a reexamination proceeding by filing a statement in compliance with § 3.73(b) that is signed by a party who is authorized to act on behalf of the assignee.*

The assignee must establish its ownership of the patent to the satisfaction of the Director. In this regard, the statement under 37 CFR 3.73(b) must have either: (i) documentary evidence of a chain of title from the original owner to the assignee (*e.g.*, copy of an executed assignment), and a statement affirming that the documentary evidence of the chain of title from the original owner to the assignee was or concurrently is being submitted for recordation pursuant to § 3.11; or (ii) a statement specifying where documentary evidence of a chain of title from the original owner to the assignee is recorded in the assignment records of the Office (*e.g.*, reel and frame number).

All future communications from the Office will continue to be directed to the above-listed address until otherwise notified by applicant.

Telephone inquires concerning this decision should be directed to the undersigned at (571) 272-2991.

/Terri Johnson/
Terri Johnson
Petitions Examiner
Office of Petitions

cc: **DYER HOLDINGS, LLC**
14632 S. Halsey Street
Olathe, KS 66062

UNITED STATES PATENT AND TRADEMARK OFFICE

Commissioner for Patents
United States Patent and Trademark Office
P.O. Box 1450
Alexandria, VA 22313-1450
www.uspto.gov

STAAS & HALSEY LLP
SUITE 700
1201 NEW YORK AVE., N.W.
WASHINGTON, DC 20005

MAILED

MAY 09 2011

OFFICE OF PETITIONS

In re Application of	:	
David S. Dyer	:	
Application No. 12/606,868	:	DECISION ON PETITION
Filed: October 27, 2009	:	TO WITHDRAW
Attorney Docket No. 2138.1001	:	FROM RECORD
	:	

This is a decision on the Request to Withdraw as attorney or agent of record under 37 C.F.R. § 1.36(b), filed April 5, 2011.

The request is **APPROVED**.

A grantable request to withdraw as attorney/agent of record must be signed by every attorney/agent seeking to withdraw or contain a clear indication that one attorney is signing on behalf of another/others. A request to withdraw will not be approved unless at least 30 (thirty) days would remain between the date of approval and the later of the expiration date of a time to file a response or the expiration date of the maximum time period which can be extended under 37 C.F.R. § 1.136(a).

The request was signed by William F. Herbert on behalf of all attorneys of record. All attorneys/agents have been withdrawn. Applicant is reminded that there is no attorney of record at this time.

All future correspondence will be directed to the first named inventor David S. Dyer at the address indicated below.

There is an outstanding Office action mailed January 19, 2011 that requires a reply from the applicant.

Telephone inquiries concerning this decision should be directed to Terri Johnson at 571-272-2991.

/Terri Johnson/
Terri Johnson
Petitions Examiner
Office of Petitions

cc: **Dyer Holdings, LLC**
14632 S. Halsey Street
Olathe, KS 66062

UNITED STATES PATENT AND TRADEMARK OFFICE

UNITED STATES DEPARTMENT OF COMMERCE
United States Patent and Trademark Office
Address: COMMISSIONER FOR PATENTS
P.O. Box 1450
Alexandria, Virginia 22313-1450
www.uspto.gov

APPLICATION NUMBER	FILING OR 371(C) DATE	FIRST NAMED APPLICANT	ATTY. DOCKET NO./TITLE
12/606,868	10/27/2009	David S. Dyer	2138.1001

CONFIRMATION NO. 3549

POWER OF ATTORNEY NOTICE

21171
STAAS & HALSEY LLP
SUITE 700
1201 NEW YORK AVENUE, N.W.
WASHINGTON, DC 20005

OC000000047509183

Date Mailed: 05/05/2011

NOTICE REGARDING CHANGE OF POWER OF ATTORNEY

This is in response to the Power of Attorney filed 04/05/2011.

- The withdrawal as attorney in this application has been accepted. Future correspondence will be mailed to the new address of record. 37 CFR 1.33.

/tsjohnson/

Office of Data Management, Application Assistance Unit (571) 272-4000, or (571) 272-4200, or 1-888-786-0101

UNITED STATES PATENT AND TRADEMARK OFFICE

Commissioner for Patents
United States Patent and Trademark Office
P.O. Box 1450
Alexandria, VA 22313-1450
www.uspto.gov

SEAGER TUFTE & WICKHEM, LLC
1221 NICOLLET AVENUE
SUITE 800
MINNEAPOLIS MN 55403-2420

MAILED
FEB 21 2012
OFFICE OF PETITIONS

In re Application of :
Regis Le Couedic et al :
Application No. 12/606,901 : DECISION ON PETITION
Filed: October 27, 2009 : TO WITHDRAW
Attorney Docket No. ZIMM1500-2 : FROM RECORD

This is a decision on the Request to Withdraw as attorney or agent under 37 C.F.R. § 1.36(b) or 37 C.F.R. § 10.40 filed February 15, 2012.

The request is **APPROVED**.

A review of the file record indicates that Katharina W. Schuster: (1) does not have power of attorney in this patent application; and (2) has been employed or otherwise engaged in the proceedings in this patent application. In view of the present decision, Katharina W. Schuster has been withdrawn from the present application and may not prepare or submit papers under 37 C.F.R. § 1.34, or correspond in any manner in this application unless appointed in an acceptable power of attorney under 37 C.F.R. § 1.32(b).

Telephone inquires concerning this decision should be directed to Irvin Dingle at 571-272-3210.

Irvin Dingle
Petitions Examiner
Office of Petitions

cc: Katharina W. Schuster
Sprinkle IP Law Group
1301 W. 25th St., Suite 408
Austin, TX 78705

UNITED STATES PATENT AND TRADEMARK OFFICE

Commissioner for Patents
United States Patent and Trademark Office
P.O. Box 1450
Alexandria, VA 22313-1450
www.uspto.gov

SEAGER TUFTE & WICKHEM, LLC
1221 NICOLLET AVENUE
SUITE 800
MINNEAPOLIS MN 55403-2420

MAILED

FEB 24 2012

OFFICE OF PETITIONS

In re Application of
Regis Le Couedic et al
Application No. 12/606,903
Filed: October 27, 2009
Attorney Docket No. 1292.1403103

DECISION ON PETITION
TO WITHDRAW
FROM RECORD

This is a decision on the Request to Withdraw as attorney or agent under 37 C.F.R. § 1.36(b) or 37 C.F.R. § 10.40 filed February 15, 2012.

The request is **APPROVED**.

A review of the file record indicates that Katharina W. Schuster: (1) does not have power of attorney in this patent application; and (2) has been employed or otherwise engaged in the proceedings in this patent application. In view of the present decision, Katharina W. Schuster has been withdrawn from the present application and may not prepare or submit papers under 37 C.F.R. § 1.34, or correspond in any manner in this application unless appointed in an acceptable power of attorney under 37 C.F.R. § 1.32(b).

Telephone inquires concerning this decision should be directed to Irvin Dingle at 571-272-3210.

Irvin Dingle
Petitions Examiner
Office of Petitions

cc: Katharina W. Schuster
Sprinkle IP Law Group
1301 W. 25th St., Suite 408
Austin, TX 78705

UNITED STATES PATENT AND TRADEMARK OFFICE

Commissioner for Patents
United States Patent and Trademark Office
P.O. Box 1450
Alexandria, VA 22313-1450
www.uspto.gov

Mr. J. Scot Wickhem, Esq.
Seager Tufte & Wickhem, LLC
1221 Nicollet Avenue, Suite 800
Minneapolis, MN 55403-2420

MAILED
MAY 05 2011
OFFICE OF PETITIONS

In re Application of	:	
Gerardo V. Noriega et al	:	
Application No. 12/606,931	:	DECISION ON PETITION
Filed: October 27, 2009	:	TO WITHDRAW
Attorney Docket No. 019635-000250US	:	FROM RECORD
	:	

This is a decision on the Request to Withdraw as attorney or agent under 37 C.F.R. § 1.36(b) or 37 C.F.R. § 10.40 filed March 28, 2011.

The request is **APPROVED**.

A review of the file record indicates that Brad J. Loos: (1) does not have power of attorney in this patent application; and (2) has been employed or otherwise engaged in the proceedings in this patent application. In view of the present decision, Brad J. Loos has been withdrawn from the present application and may not prepare or submit papers under 37 C.F.R. § 1.34, or correspond in any manner in this application unless appointed in an acceptable power of attorney under 37 C.F.R. § 1.32(b).

Telephone inquires concerning this decision should be directed to Irvin Dingle at 571-272-3210.

Irvin Dingle
Petitions Examiner
Office of Petitions

PTO/SB/20PCT-EP (05-10)
Approved for use through 01/31/2012. OMB 0651-0058
U.S. Patent and Trademark Office; U. S. DEPARTMENT OF COMMERCE
Under the Paperwork Reduction Act of 1995, no persons are required to respond to a collection of information unless it displays a valid OMB control number.

REQUEST FOR PARTICIPATION IN THE PATENT COOPERATION TREATY - PATENT PROSECUTION HIGHWAY (PCT-PPH) PILOT PROGRAM BETWEEN THE EUROPEAN PATENT OFFICE (EPO) AND THE USPTO

Application No:	12606968	Filing date:	2009-10-27
First Named Inventor:	Christian Laplace		
Title of the Invention:	1410-97075-US		

THIS REQUEST FOR PARTICIPATION IN THE PCT-PPH PILOT PROGRAM ALONG WITH THE REQUIRED DOCUMENTS MUST BE SUBMITTED VIA EFS-WEB. INFORMATION REGARDING EFS-WEB IS AVAILABLE AT HTTP://WWW.USPTO.GOV/EBC/EFS_HELP.HTML

APPLICANT HEREBY REQUESTS PARTICIPATION IN THE PCT-PPH PROGRAM AND PETITIONS TO MAKE THE ABOVE-IDENTIFIED APPLICATION SPECIAL UNDER THE PCT-PPH PROGRAM.

The above-identified application is (1) a national stage entry of the corresponding PCT application, or (2) a national stage entry of another PCT application which claims priority to the corresponding PCT application, or (3) a national application that claims domestic/ foreign priority to the corresponding PCT application, or (4) a national application which forms the basis for the priority claim in the corresponding PCT application, or (5) a continuing application of a U.S. application that satisfies one of (1) to (4) above, or (6) a U.S. application that claims domestic benefit to a U.S. provisional application which forms the basis for the priority claim in the corresponding PCT application.

The corresponding PCT application number(s) is/are: PCT/US2009/062351

The international filing date of the corresponding PCT application(s) is/are: October 28, 2009

I. List of Required Documents:

a. **A copy of the latest international work product (WO/ISA, WO/IPEA, or IPER) in the above–identified corresponding PCT application(s)**

☐ Is attached

☒ Is not attached because the document is already in the U.S. application.

b. **A copy of all claims which were indicated as having novelty, inventive step and industrial applicability in the above-identified corresponding PCT application(s).**

☒ Is attached.

☐ Is not attached because the document is already in the U.S. application.

c. **English translations of the documents in a. and b. above are attached (if the documents are not in the English language). A statement that the English translation is accurate is attached for the document in b. above.**

This collection of information is required by 35 U.S.C. 119, 37 CFR 1.55, and 37 CFR 1.102(d). The information is required to obtain or retain a benefit by the public, which is to file (and by the USPTO to process) an application. Confidentiality is governed by 35 U.S.C. 122 and 37 CFR 1.11 and 1.14. This collection is estimated to take 2 hours to complete, including gathering, preparing, and submitting the completed application form to the USPTO. Time will vary depending upon the individual case. Any comments on the amount of time you require to complete this form and/or suggestions for reducing this burden should be sent to the Chief Information Officer, U.S. Patent and Trademark Office, U.S. Department of Commerce, P.O. Box 1450, Alexandria, VA 22313-1450. DO NOT SEND FEES OR COMPLETED FORMS TO THIS ADDRESS.

Approved for use through 01/31/2012. OMB 0651-0058
U.S.Patent and Trademark Office; U.S. DEPARTMENT OF COMMERCE

Under the Paperwork Reduction Act of 1995, no persons are required to respond to a collection of information unless it displays a valid OMB control number.

REQUEST FOR PARTICIPATION IN THE PCT-PPH PILOT PROGRAM BETWEEN THE EPO AND THE USPTO

(continued)

Application No.:	12606968
First Named Inventor:	Christian Laplace

d. **(1) An information disclosure statement listing the documents cited in the international work products (ISR, WO/ISA, WO/IPEA, IPER) of the corresponding PCT application.**

☐ Is attached

☒ Has already been filed in the above-identified U.S. application on 4/13/10

(2) Copies of all documents (except) for U.S. patents or U.S. patent application publications)

☐ Are attached.

☒ Have already been filed in the above-identified U.S. application on 4/13/10

II. Claims Correspondence Table:

Claims in US Application	Patentable Claims in the corresponding PCT Application	Explanation regarding the correspondence
1-20	1-20	Are identical

III. All the claims in the US application sufficiently correspond to the patentable claims in the corresponding PCT application.

Signature Nada J. Ardeleanu	Date 2011-11-21
Name (Print/Typed) Nada J. Ardeleanu	Registration Number 54965

Privacy Act Statement

The **Privacy Act of 1974 (P.L. 93-579)** requires that you be given certain information in connection with your submission of the attached form related to a patent application or patent. Accordingly, pursuant to the requirements of the Act, please be advised that: (1) the general authority for the collection of this information is 35 U.S.C. 2(b)(2); (2) furnishing of the information solicited is voluntary; and (3) the principal purpose for which the information is used by the U.S. Patent and Trademark Office is to process and/or examine your submission related to a patent application or patent. If you do not furnish the requested information, the U.S. Patent and Trademark Office may not be able to process and/or examine your submission, which may result in termination of proceedings or abandonment of the application or expiration of the patent.

The information provided by you in this form will be subject to the following routine uses:

1. The information on this form will be treated confidentially to the extent allowed under the Freedom of Information Act (5 U.S.C. 552) and the Privacy Act (5 U.S.C 552a). Records from this system of records may be disclosed to the Department of Justice to determine whether disclosure of these records is required by the Freedom of Information Act.
2. A record from this system of records may be disclosed, as a routine use, in the course of presenting evidence to a court, magistrate, or administrative tribunal, including disclosures to opposing counsel in the course of settlement negotiations.
3. A record in this system of records may be disclosed, as a routine use, to a Member of Congress submitting a request involving an individual, to whom the record pertains, when the individual has requested assistance from the Member with respect to the subject matter of the record.
4. A record in this system of records may be disclosed, as a routine use, to a contractor of the Agency having need for the information in order to perform a contract. Recipients of information shall be required to comply with the requirements of the Privacy Act of 1974, as amended, pursuant to 5 U.S.C. 552a(m).
5. A record related to an International Application filed under the Patent Cooperation Treaty in this system of records may be disclosed, as a routine use, to the International Bureau of the World Intellectual Property Organization, pursuant to the Patent Cooperation Treaty.
6. A record in this system of records may be disclosed, as a routine use, to another federal agency for purposes of National Security review (35 U.S.C. 181) and for review pursuant to the Atomic Energy Act (42 U.S.C. 218(c)).
7. A record from this system of records may be disclosed, as a routine use, to the Administrator, General Services, or his/her designee, during an inspection of records conducted by GSA as part of that agency's responsibility to recommend improvements in records management practices and programs, under authority of 44 U.S.C. 2904 and 2906. Such disclosure shall be made in accordance with the GSA regulations governing inspection of records for this purpose, and any other relevant (*i.e.*, GSA or Commerce) directive. Such disclosure shall not be used to make determinations about individuals.
8. A record from this system of records may be disclosed, as a routine use, to the public after either publication of the application pursuant to 35 U.S.C. 122(b) or issuance of a patent pursuant to 35 U.S.C. 151. Further, a record may be disclosed, subject to the limitations of 37 CFR 1.14, as a routine use, to the public if the record was filed in an application which became abandoned or in which the proceedings were terminated and which application is referenced by either a published application, an application open to public inspection or an issued patent.
9. A record from this system of records may be disclosed, as a routine use, to a Federal, State, or local law enforcement agency, if the USPTO becomes aware of a violation or potential violation of law or regulation.

UNITED STATES PATENT AND TRADEMARK OFFICE

Commissioner for Patents
United States Patent and Trademark Office
P.O. Box 1450
Alexandria, VA 22313-1450
www.uspto.gov

FITCH EVEN TABIN & FLANNERY
120 SOUTH LASALLE STREET
SUITE 1600
CHICAGO IL 60603-3406

In re Application of	
Christian Laplace	**: DECISION ON REQUEST TO**
Application No.: 12/606,968	**: PARTICIPATE IN THE PATENT**
Filed: October 27, 2009	**: PROSECUTION HIGHWAY**
Attorney Docket No.: 1410-97075	**: PROGRAM AND PETITION**
For: Apparatus and Methods For	**: TO MAKE SPECIAL UNDER**
Inserting Food Products Into Packages	**: 37 CFR 1.102(a)**

This is a decision on the request to participate in the PCT Patent Prosecution Highway (PCT-PPH) pilot program and the petition under 37 CFR 1.102(a), filed on November 21, 2011, to make the above-identified application special.

The request and petition are **DENIED**.

Discussion

A grantable request to participate in the PCT-PPH pilot program and petition to make special require:

1) The U.S. application must have an eligible relationship to one or more PCT applications where the ISA or IPEA are Australia, Austria, China, EPO, Finland, JPO, Korea, NPI, Russia, Spain, Sweden and the USPTO;

(2) At least one claim in the PCT application has novelty, inventive step, and industrial applicability and must be free of any observations in Box VIII in the latest work product in the international stage or applicant must identify and explain why the claim(s) is/are not subject to the observation in Box VIII;

(3) Applicant must submit a copy of the claim(s) from the PCT application(s) that have novelty, inventive step, and industrial applicability along with an English translation thereof and a statement that the English translation is accurate, if the claims are not in the English language;

(4) All the claims in the U.S. application must sufficiently correspond or be amended to sufficiently correspond to the claim(s) that have novelty, inventive step, and industrial applicability in the PCT application(s);

(5) Examination of the U.S. application has not begun;

(6) Applicant must submit a copy of the latest international work product from the PCT application indicating that the claim(s) have novelty, inventive step, and industrial applicability along with an English translation thereof.

(7) Applicant must submit an IDS listing the documents cited by the PCT examiner in the international work product along with copies of documents except U.S. patents or U.S. patent application publications.

(8) Applicant is required to submit a claims correspondence table in English which indicates how all the claims in the U.S. application correspond to the claims indicated as having novelty, inventive step and industrial applicability in the latest international work product.

The request to participate in the PPH pilot program and petition fails to meet condition (5).

Regarding requirement (5), a non-final office action was mailed on January 2, 2012. As such the examination of this application has begun.

Telephone inquiries concerning this decision should be directed to Kimberly Inabinet at 571-272-4618.

All other inquiries concerning the examination or status of the application is accessible in the PAIR system at http://www.uspto.gov/ebc/index.html.

Anthony Knight
Director
Office of Petitions

UNITED STATES PATENT AND TRADEMARK OFFICE

Commissioner for Patents
United States Patent and Trademark Office
P.O. Box 1450
Alexandria, VA 22313-1450
www.uspto.gov

MCDERMOTT WILL & EMERY LLP
600 13TH STREET, NW
WASHINGTON DC 20005-3096

MAILED

JUL 18 2011

OFFICE OF PETITIONS

In re Application of	:	
DRYSEN, Darrell et al.	:	
Application No. 12/606,971	:	DECISION ON PETITION
Filed: October 27, 2009	:	TO WITHDRAW
Attorney Docket No. **087098-0017**	:	FROM RECORD
	:	

This is a decision on the Request to Withdraw as attorney or agent of record under 37 C.F.R. § 1.36(b), filed June 24, 2011.

The request is **NOT APPROVED**.

The Office will no longer accept address changes to a new practitioner or law firm filed with a Request, absent the filing of a power of attorney to the new representative. The Office will either change the correspondence address of record to the most current address information provided for the assignee of the entire interest who properly became of record under 37 C.F.R 3.71 or, if no assignee of the entire interest has properly been made of record under 37 CFR 3.71, the most current address information provided for the first named inventor.

Accordingly, the request to withdraw from record cannot be approved because the change of address is not that of: (1) the first named inventor; or (2) an assignee of the entire interest under C.F.R 3.71.

37 CFR 3.71(c) states:

An assignee becomes of record either in a national patent application or a reexamination proceeding by filing a statement in compliance with § 3.73(b) that is signed by a party who is authorized to act on behalf of the assignee.

All future communications from the Office will continue to be directed to the above-listed address until otherwise notified by applicant.

Telephone inquiries concerning this decision should be directed to the undersigned at 571-272-4231.

Michelle R. Eason
Paralegal Specialist
Office of Petitions

UNITED STATES PATENT AND TRADEMARK OFFICE

UNITED STATES DEPARTMENT OF COMMERCE
United States Patent and Trademark Office
Address: COMMISSIONER FOR PATENTS
P.O. Box 1450
Alexandria, Virginia 22313-1450
www.uspto.gov

APPLICATION NO.	FILING DATE	FIRST NAMED INVENTOR	ATTORNEY DOCKET NO.	CONFIRMATION NO.
12/606,988	10/27/2009	Merri Lee Marks	M0104.1001US	3780

91477 7590 07/06/2011
Dickstein Shapiro LLP
2049 Century Park East
Suite 700
Los Angeles, CA 90067

EXAMINER
NGUYEN, TRINH T

ART UNIT	PAPER NUMBER
3644	

MAIL DATE	DELIVERY MODE
07/06/2011	PAPER

Please find below and/or attached an Office communication concerning this application or proceeding.

The time period for reply, if any, is set in the attached communication.

UNITED STATES PATENT AND TRADEMARK OFFICE

Commissioner for Patents
United States Patent and Trademark Office
P.O. Box 1450
Alexandria, VA 22313-1450
www.uspto.gov

JUL - 6 2011

Dickstein, Shapiro LLP
2049 Century Park East
Suite 700
Los Angeles, CA 90067

In re Application of Merri Lee Marks Application No. 12/606,988 Filed: October 27, 2009 For: WATERPROOF PLANT POT HOLDER	: DECISION ON THE PETITION : REGARDING REQUEST TO : WITHDRAW REQUIREMENT : FOR RESTRICTION

Applicant's petition filed under 37 CFR 1.144, filed June 8, 2011, requests the supervisor to withdraw the restriction requirement made final in the Office action of March 8, 2011.

The petition is **DISMISSED**.

A review of the file record indicates that the examiner in this case issued an Election of Species requirement on January 25, 2011. The applicant responded with an election of species #5 shown in Figure 8 of the application. The election was made with traverse. The examiner made the election final in a non-final Office action dated March 8, 2011. The applicant responded with an amendment and the instant petition on June 8, 2011.

It is not entirely clear what relief applicant wishes nor what specifically is seen as being deficient with the election of species in question. The petition accurately recites the history of the proceedings of the prosecution to date. Also, the latest version of the claims, as are pending as per the amendment filed with the petition, is provided. Applicant then indicates a belief that the now-narrowed claim 1 is a generic claim. Finally, the applicant indicates that "there is still no serious search and examination burden and thus neither the present nor any further restriction requirement is warranted". It is these last two statements that will be taken as applicant's requested relief and the deficiency of the requirement by the examiner.

As far as the now-narrowed claim 1 being generic, because the examiner of record in this case has not yet treated the claim in question, the issue of whether or not said claim can be considered generic is currently not ripe for decision on petition, and will not be now decided.

As for the statement that "there is no serious search and examination burden", the examiner indicated in the original election requirement, that there existed a burden to examine all listed species due to the fact that such examination would require additional searches to be performed for each of the identified species.

Once the examiner has provided an identification of why burden is present, the onus falls to the applicant to provide specific reasons as to why the burden alleged by the examiner does not exist. In this petition the applicant merely offers the conclusionary statement that "there is still no serious search and examination burden". The mere inclusion of such a broad allegation cannot serve as evidence that a requirement for an election of species was made in error. Therefore the election of species made January 25, 2011 is seen as being proper and will not be withdrawn.

The petition of June 8, 2011 is **DISMISSED**.

This application is being returned to the examiner to consider the amendment filed June 8, 2011.

Any questions or comments with respect to this decision should be forwarded to Quality Assurance Specialist Steven N. Meyers at (571) 272-6611.

Kathy Matecki

Kathy Matecki, Director
Patent Technology Center 3600
(571) 272-5250

snm/snm: 7/3/11

SM

UNITED STATES PATENT AND TRADEMARK OFFICE

Commissioner for Patents
United States Patent and Trademark Office
P.O. Box 1450
Alexandria, VA 22313-1450
www.uspto.gov

MAYER & WILLIAMS PC
251 NORTH AVENUE WEST
Suite 201
WESTFIELD NJ 07090

MAILED

DEC 20 2010

OFFICE OF PETITIONS

In re Application of
Christine Lang et al.
Application No. 12/607,017
Filing Date: October 27, 2009
Attorney Docket No. **7003/56D1**

DECISION ON PETITION

This is a decision on the petition under the unintentional provisions of 37 CFR 1.137(b), filed November 3, 2010, to revive the above-identified application.

There is no indication that the petition is signed by a registered patent attorney or patent agent of record. However, in accordance with 37 CFR 1.34, the signature of Ann Wieczorek appearing on the correspondence shall constitute a representation to the United States Patent and Trademark Office that he is authorized to represent the particular party in whose behalf he acts. If, Ann Wieczorek desires to be acknowledged as the attorney of record in this file, the appropriate power of attorney documents must be submitted.

The application became abandoned for failure to reply in a timely manner to the Notice to File Missing Parts of NonProvisonal Application (Notice), mailed February 23, 2010. The Notice set a period for reply of two (2) months from the mail date of the Notice. No extensions of time under the provisions of 37 CFR 1.136(a) were obtained. Accordingly, the application became abandoned on April 24, 2010.

The petition is hereby **GRANTED**.

The petition satisfies the, requirements of 37 CFR 1.137(b) in that petitioner has supplied (1) the reply in the form of filing fee, search fee, examination fee, additional claim fee, surcharge, replacement drawings, and substitute specification (2) the petition fee of $810 (3) a proper statement of unintentional delay.

It is not apparent whether the person signing the statement of unintentional delay was in a position to have firsthand or direct knowledge of the facts and circumstances of the delay at issue. Nevertheless, such statement is being treated as having been made as the result of a reasonable inquiry into the facts and circumstances of such delay. See 37 CFR 10.18(b) and Changes to Patent Practice and Procedure; Final Rule Notice, 62 Fed. Reg. 53131, 53178 (October 10, 1997), 1203 Off. Gaz. Pat. Office 63, 103 (October 21, 1997). In the event that such an inquiry has not been made, petitioner must make such an inquiry. If such inquiry results in the discovery that it is not correct that the entire delay in filing the required reply from the due date for the reply until the filing of a grantable petition pursuant to 37 CFR 1.137(b) was unintentional, petitioner must notify the Office.

Telephone inquiries concerning this decision should be directed to JoAnne Burke at 571-272-4584.

This application is being referred to the Office of Patent Application Processing.

/JoAnne Burke/
JoAnne Burke
Petitions Examiner
Office of Petitions

UNITED STATES PATENT AND TRADEMARK OFFICE

Commissioner for Patents
United States Patent and Trademark Office
P.O. Box 1450
Alexandria, VA 22313-1450
www.uspto.gov

BLANK ROME LLP
WATERGATE
600 NEW HAMPSHIRE AVENUE, N.W.
WASHINGTON DC 20037

MAILED
SEP 27 2010
OFFICE OF PETITIONS

In re Application of	:	
Nathan Ravi, et al.	:	DECISION ON PETITION
Application No. 12/607,100	:	TO WITHDRAW
Filed: October 28, 2009	:	FROM RECORD
Attorney Docket No. **111828.0161**	:	

This is a decision on the request to withdraw as attorney of record under 37 CFR § 1.36, filed August 27, 2010.

The request is **NOT APPROVED**.

The request cannot be approved because it lacks a forwarding correspondence address of the first named inventor or a properly intervening assignee.

If the forwarding correspondence address is to the assignee, the Office will only accept correspondence address changes to the most current address information provided for the assignee of the entire interest *that properly became of record under 37 CFR 3.71.* 37 CFR 3.71(c) states:

> *An assignee becomes of record either in a national patent application or a reexamination proceeding by filing a statement in compliance with § 3.73(b) that is signed by a party who is authorized to act on behalf of the assignee.*

The assignee must establish its ownership of the patent to the satisfaction of the Director. In this regard, the statement under 37 CFR 3.73(b) must have either: (i) documentary evidence of a chain of title from the original owner to the assignee (*e.g.*, copy of an executed assignment), and a statement affirming that the documentary evidence of the chain of title from the original owner to the assignee was or concurrently is being submitted for recordation pursuant to § 3.11; or (ii) a statement specifying where documentary evidence of a chain of title from the original owner to the assignee is recorded in the assignment records of the Office (*e.g.*, reel and frame number).

All future communications from the Office will continue to be directed to the above-listed address until otherwise notified by applicant.

Telephone inquires concerning this decision should be directed to the undersigned at (571) 272-2991.

Terri Johnson
Petitions Examiner
Office of Petitions

UNITED STATES PATENT AND TRADEMARK OFFICE

Commissioner for Patents
United States Patent and Trademark Office
P.O. Box 1450
Alexandria, VA 22313-1450
www.uspto.gov

SAT, INC.
SUITE 300
9250 BROOKFIELD CT.
FLORENCE KY 41042

MAILED
JUL 15 2011
OFFICE OF PETITIONS

In re Application of	:	
David J. SCHNEIDER et al.	:	
Application No. 12/607,188	:	DECISION ON PETITION
Filed: October 28, 2009	:	
Attorney Docket No. P-760-2/SATI 200005US03	:	

This is a decision on the petition under the unintentional provisions of 37 CFR 1.137(b), filed June 24, 2011, to revive the above-identified application.

The petition is **GRANTED**.

This application became abandoned for failure to timely pay the issue and publication fees on or before June 14, 2011, as required by the Notice of Allowance and Fee(s) Due, mailed March 14, 2011. Accordingly, the date of abandonment of this application is June 15, 2011.

The petition satisfies the requirements of 37 CFR 1.137(b) in that petitioner has supplied (1) the reply in the form of payment of the issue fee of $755.00 and the publication fee of $300.00, (2) the petition fee of $810.00; and (3) a proper statement of unintentional delay. Accordingly, the issue and publication fees are accepted as having been unintentionally delayed.

Telephone inquiries concerning this decision should be directed to the undersigned at (571) 272-4231.

This application is being referred to Publishing Division for processing into a patent.

Michelle R. Eason
Paralegal Specialist
Office of Petitions

UNITED STATES PATENT AND TRADEMARK OFFICE

Commissioner for Patents
United States Patent and Trademark Office
P.O. Box 1450
Alexandria, VA 22313-1450
www.uspto.gov

LICATA & TYRRELL P.C.
66 E. MAIN STREET
MARLTON, NEW JERSEY 08053

MAILED
JUN 27 2011
OFFICE OF PETITIONS

Applicant: Gibori, et al.
Appl. No.: 12/607,255
Filing Date: October 28, 2009
Title: Animal Model and use of 17ß-Hydroxysteroid Dehydrogenase Type 7 in the Diagnosis of Anencephaly
Attorney Docket No.: UIC0022US
Pub. No.: US 2010/0008311 A1
Pub. Date: May 6, 2010 2010

This is a decision on the "Petition to Correct Published Application under 37 CFR 1.182", received on September 14, 2010, for the above-identified application, which is also being treated as a request for a corrected patent application publication under 37 CFR 1.221(b).

The petition is dismissed, as 37 CFR 1.221 is applicable.

The request is DISMISSED.

Applicant requests that the application be republished because the patent application publication contains a material error on the front page of the publication wherein the name of the first inventor was misprinted as "Guela Gibori" wherein it should be changed to Geula Gibori".

37 CFR 1.221 (b) is applicable "only when the Office makes a material mistake which is apparent from Office records.... Any request for a corrected publication or revised patent application publication other than provided as provided in paragraph (a) of this section must be filed within two months from the date of the patent application publication. This period is not extendable." A material mistake must affect the public's ability to appreciate the technical disclosure of the patent application publication, to determine the scope of the patent application publication, or to determine the scope of the provisional rights that an applicant may seek to enforce upon issuance of a patent. [1]

The request for corrected publication, received on September 14, 2010, was not timely filed under 37 CFR 1.221(b).

The instant request does not identity a mistake made by the Office with respect to the name of the first named inventor "Guela Gibori." The inventors name is correctly printed, as provided on the Oath. Furthermore, an error in the inventor's name does not affect the public's ability to appreciate the technical disclosure of the patent application publication, determine the scope of

[1] Changes to Implement Eighteen-Month Publication of Patent Applications, 65 FR 57023, 57038 (Sept. 20, 2000), 1239, Off. Gaz. Pat. Office Notices 63, 75 (Oct. 10, 2000) (final rule).

the patent application publication or determine the scope of the provisional rights that an applicant may seek to enforce upon issuance of a patent.

Applicant is reminded of his duty to conduct a reasonable inquiry before filing a paper before the Office. See MPEP 410.

Applicants' request for a corrected patent application publication on September 14, 2010, may constitute a "failure to engage in reasonable efforts to conclude processing or examination of the application." See 1.704(c). This determination will be made on or after a mailing of a Notice of Allowance.

It would greatly benefit the Office if **applicant did not provide copies of papers**, which were previously submitted and/or **a complete copy of the pre-grant publication**, as it unnecessarily increases the cost to the Office. See 37 CFR 1.4(b). A request for corrected publication need only point out what was printed incorrectly in the application, where the error occurs in the publication and where the correct text or drawing is found in the application papers. Marked up relevant copies of the applications papers and the pre-grant publication may facilitate processing of the request, where it is not readily apparent where the error occurs. If it is not clear why the error is a material error, further explanation may be warranted.

The applicant is advised that a "request for republication of an application previously published" may be filed under 37 CFR 1.221(a). Such a request for republication "must include a copy of the application compliance with the Office's electronic filing system requirements and be accompanied by the publication fee set forth in § 1.18(d) and the processing fee set forth in § 1.17(i)." If the request for republication does not comply with the electronic filing system requirements, the republication will not take place and the publication fee set forth in § 1.18(d) will be refunded. The processing fee will be retained.

A guide for filing a request for a Pre-Grant Publication, such as a request for republication, may be found on the link below:

http://www.uspto.gov/patents/process/file/efs/guidance/index.jsp

http://www.uspto.gov/ebc/portal/efs/pgpub_quickstart.pdf

Any request for republication under 37 CFR 1.221(a), must be submitted via the EFS system, as a "Pre-Grant Publication."

Inquiries relating to this matter may be directed to Mark Polutta at (571) 272-7709.

Mark Polutta
Senior Legal Advisor
Office of Patent Legal Administration
Office of the Deputy Commissioner
for Patent Examination Policy

UNITED STATES PATENT AND TRADEMARK OFFICE

COMMISSIONER FOR PATENTS
UNITED STATES PATENT AND TRADEMARK OFFICE
P.O. BOX 1450
ALEXANDRIA, VA 22313-1450
www.uspto.gov

Paper No.

GlaxoSmithKline
GLOBAL PATENTS -US, UW2220
P. O. BOX 1539
KING OF PRUSSIA PA 19406-0939

MAILED
JAN 04 2011
OFFICE OF PETITIONS

In re Application of	:	
Muller et al.	:	
Application No. 12/607,284	:	ON PETITION
Filed: October 28, 2009	:	
Attorney Docket No. PU62444C1	:	

This is a decision on the "PETITION UNDER 37 CFR § 1.182" filed September 27, 2010, requesting that a terminal disclaimer filed February 23, 2010 be withdrawn as unnecessary.

The petition is **GRANTED**.

The terminal disclaimer filed on February 23, 2010, is hereby **WITHDRAWN**.

Petitioner argues that the terminal disclaimer is not needed as the response filed on September 27, 2010 removed WO 03/098992 as effective prior art and the disclosure in U.S. Patent No. 7,547,719 is the same as the cited reference WO 03/098992. The examiner states that the terminal disclaimer does not apply to any claim currently of record. Thus, according to the examiner, it is permissible to withdraw the terminal disclaimer.

It should be noted that this decision is not a determination that the subject matter of the current claims is distinct from the claims in the patents and/or applications to which the terminal disclaimer applied.

Receipt of the petition fee of $400 is acknowledged.

Technology Center AU 1626 has been advised of this decision. The application is being referred to the Technology Center for further action in light of this decision, including withdrawal of the terminal disclaimer filed on February 23, 2010.

Telephone inquiries concerning this decision may be directed to the undersigned at 571-272-3219.

Nancy Johnson
Senior Petitions Attorney
Office of Petitions

UNITED STATES PATENT AND TRADEMARK OFFICE

Commissioner for Patents
United States Patent and Trademark Office
P.O. Box 1450
Alexandria, VA 22313-1450
www.uspto.gov

GLAXOSMITHKLINE
GLOBAL PATENTS -US, UW2220
P. O. BOX 1539
KING OF PRUSSIA PA 19406-0939

MAILED

JAN 19 2011

OFFICE OF PETITIONS

In re Application of
Muller, et al.
Application No. 12/607,291
Filed: 28 October, 2009
Attorney Docket No. PU62444C2

DECISION ON PETITION

This is a decision on the petition filed on 27 September, 2010 (supplemented with substitute disclaimer(s) on 30 November and 1 December, 2010), requesting pursuant to the regulations at 37 C.F.R §1.182 that the acceptance of the terminal disclaimer originally filed herein on 23 February, 2010, be withdrawn

NOTE:

Petitioner has filed of record a request for withdrawal of a Terminal Disclaimer (TD) previously filed, but does not appear to have conferred with the Examiner so as to have an Interview Summary entered into the record to make clear whether or not the Examiner concurs in the request.

Such a document, though not required, often may assist the Office of Petitions in expediting Petitioner's request.

The petition pursuant to 37 C.F.R §1.182 is **GRANTED**.

BACKGROUND

On 27 September, 2010, Petitioner filed a petition (with fee) pursuant to the regulations at 37 C.F.R §1.182 requesting that the acceptance of the terminal disclaimer (TD) originally filed herein on 23 February, 2010, be withdrawn.[1] Petitioner averred that the original statement of the TD as to the cited reference WO 03/098992 was no longer applicable because the response filed

[1] In the petition, Petitioner averred that substitute terminal disclaimer(s) was/were being submitted, and that U.S. Patent No. 7,547,719—included in the prior terminal disclaimer—is not included in the substitute disclaimer(s) now submitted.

contemporaneously with the petition no longer included the WO 03/098992 reference associated with the U.S. Patent No. 7,547,719 (the '719 patent), and, thus, removed the need for a TD as to '719 patent.

This application is but one of several formerly citing WO 03/098992 reference. The Examiner previously considered the TD as to, *inter alia*, Application No. 12/607,284 (the '284 application), and set forth in a communication to the Office of Petitions on 23 December, 2010 (in response to an inquiry from the Office of Petitions on 20 December, 2010), with regard to the '284 application his concurrence in the withdrawal of the TD therein. Thereafter the Examiner indicated in a communication to the Office of Petitions of 27 December, 2010, that his concurrence as to the '284 application applied to several other applications, including the instant application.

The guidance in the Commentary at MPP §1490 provides in pertinent part:

***

VII.WITHDRAWING A RECORDED TERMINAL DISCLAIMER

If timely requested, a recorded terminal disclaimer may be withdrawn before the application in which it is filed issues as a patent, or in a reexamination proceeding, before the reexamination certificate issues. After a patent or reexamination certificate issues, it is unlikely that a recorded terminal disclaimer will be nullified.

A. Before Issuance Of Patent

While the filing and recordation of an unnecessary terminal disclaimer has been characterized as an "unhappy circumstance" in *In re Jentoft*, 392 F.2d 633, 157 USPQ 363 (CCPA 1968), there is no statutory prohibition against nullifying or otherwise canceling the effect of a recorded terminal disclaimer which was erroneously filed before the patent issues. *>Because< the terminal disclaimer would not take effect until the patent is granted, and the public has not had the opportunity to rely on the terminal disclaimer, relief from this unhappy circumstance may be available by way of petition or by refiling the application (other than by refiling it as a CPA).

Under appropriate circumstances, consistent with the orderly administration of the examination process, the nullification of a recorded terminal disclaimer may be addressed by filing a petition under 37 CFR §1.182 requesting withdrawal of the recorded terminal disclaimer. Petitions seeking to reopen the question of the propriety of the double patenting rejection that prompted the filing of the terminal disclaimer have not been favorably considered. The filing of a continuing application other than a CPA, while abandoning the application in which the terminal disclaimer has been filed, will typically nullify the effect of a terminal disclaimer. The filing of a Request for Continued Examination (RCE) of an application under 37 CFR §1.114 will not nullify the effect of a

terminal disclaimer, *>because< a new application has not been filed, but rather prosecution has been continued in the existing application. (Emphasis supplied.)

***

It appears as of this writing that the barriers to withdrawal of the 23 February, 2010, TD have been removed.

Accordingly, the petition is **granted**.

This application is released to the Technology Center/AU 1626 for further processing in due course.

While telephone inquiries regarding this decision may be directed to the undersigned at (571) 272-3214, it is noted that all practice before the Office is in writing (see: 37 C.F.R. §1.2[2]) and the proper authority for action on any matter in this regard are the statutes (35 U.S.C.), regulations (37 C.F.R.) and the commentary on policy (MPEP). Therefore, no telephone discussion may be controlling or considered authority for Petitioner's/Caller's action(s).

/John J. Gillon, Jr./
John J. Gillon, Jr.
Senior Attorney
Office of Petitions

[2] The regulations at 37 C.F.R. §1.2 provide:
§1.2 Business to be transacted in writing.
All business with the Patent and Trademark Office should be transacted in writing.The personal attendance of applicants or their attorneys or agents at the Patent and Trademark Office is unnecessary. The action of the Patent and Trademark Office will be based exclusively on the written record in the Office. No attention will be paid to any alleged oral promise, stipulation,or understanding in relation to which there is disagreement or doubt.

UNITED STATES PATENT AND TRADEMARK OFFICE

Commissioner for Patents
United States Patent and Trademark Office
P.O. Box 1450
Alexandria, VA 22313-1450
www.uspto.gov

RATNERPRESTIA
P.O. BOX 980
VALLEY FORGE, PA 19482

MAILED

NOV 21 2011

OFFICE OF PETITIONS

In re Application of	:	
John E.Siedlarz	:	
Application No. 12/607,297	:	DECISION ON PETITION
Filed: October 28, 2009	:	TO WITHDRAW FROM
Attorney Docket No. NBS-100US1	:	RECORD

This is a decision on the Request to Withdraw as attorney or agent of record under 37 CFR §§ 1.36(b) or 10.40 filed November 8, 2011.

The request is **NOT APPROVED**.

Practitioners have not certified that they have (1) given reasonable notice to the client, prior to the expiration of the reply period, that the practitioner(s) intends to withdraw from employment; (2) delivered to the client or duly authorized representative of the client papers and property (including funds) to which the client is entitled; and (3) notified the client of any responses that may be due and the time frame within which the client must respond. The failure to do so may subject the practitioner to discipline[1]. *See USPTO Form No. PTO/SB/83.*

Petitioner should note USPTO Form Number PTO/SB/83 requires practitioner to "check each box below that is factually correct" and Warns that "If a box is left unchecked, the request will likely not be approved". (*See USPTO Form No. PTO/SB/83*).

The requested change of correspondence address in the present request is improper. The Office will only accept correspondence address changes to the most current address Information provided for the assignee of the entire interest *that properly became of record under 37 CFR 3.71*[2], or, if no assignee of the entire interest has properly been made of record, the most current address information provided for the first named inventor. Therefore, the Office cannot change the correspondence address to the address on the Request to Withdraw at this present time.

[1] Practitioner should note that false certification may violate a practitioners' duty under 37 CFR 10.23(b)(4) and (b)(5).

[2] An assignee becomes of record either in a national patent application or a reexamination proceeding by filing a statement in compliance with § 3.73(b) that is signed by a party who is authorized to act on behalf of the assignee.

Additionally, the Office will no longer change the correspondence address to that of a new practitioner unless the Request is accompanied by a power of attorney to a new practitioner (*See* USPTO Form PTO/SB/82).

All future communications from the Office will continue to be directed to the above-listed address until otherwise notified by applicant.

Telephone inquiries concerning this decision should be directed to the undersigned at (571) 272-3226.

Andrea Smith
Petitions Examiner
Office of Petitions

cc: National Biometric Security Project
c/o Richard R. Gill
60 Old Glen Road
Morristown, NJ 07960

UNITED STATES PATENT AND TRADEMARK OFFICE

Commissioner for Patents
United States Patent and Trademark Office
P.O. Box 1450
Alexandria, VA 22313-1450
www.uspto.gov

RATNERPRESTIA
P.O. BOX 980
VALLEY FORGE, PA 19482

MAILED

JAN 04 2012

OFFICE OF PETITIONS

In re Application of John E. Siedlarz Application No. 12/607,297 Filed: October 28, 2009 Attorney Docket No. NBS-100US1	: : : : :	DECISION ON PETITION TO WITHDRAW FROM RECORD

This is a decision on the renewed Request to Withdraw as attorney or agent of record under 37 CFR §§ 1.36(b) or 37 CFR 10.40, filed December 15, 2011.

The request is **NOT APPROVED**.

The requested change of correspondence address in the present request is improper. The Office will only accept correspondence address changes to the most current address Information provided for the assignee of the entire interest *that properly became of record under 37 CFR 3.71*[1], or, if no assignee of the entire interest has properly been made of record, the most current address information provided for the first named inventor. Therefore, the Office cannot change the correspondence address to the address on the Request to Withdraw at this present time.

Additionally, the Office will no longer change the correspondence address to that of a new practitioner unless the Request is accompanied by a power of attorney to a new practitioner (*See* USPTO Form PTO/SB/82).

All future communications from the Office will continue to be directed to the above-listed address until otherwise notified by applicant.

Telephone inquiries concerning this decision should be directed to the undersigned at (571) 272-3226.

Andrea Smith
Petitions Examiner
Office of Petitions

cc: National Biometric Security Project
c/o Richard R. Gill
60 Old Glen Road
Morristown, NJ 07960

[1] An assignee becomes of record either in a national patent application or a reexamination proceeding by filing a statement in compliance with § 3.73(b) that is signed by a party who is authorized to act on behalf of the assignee.

UNITED STATES PATENT AND TRADEMARK OFFICE

Commissioner for Patents
United States Patent and Trademark Office
P.O. Box 1450
Alexandria, VA 22313-1450
www.uspto.gov

MAILED

JAN 30 2012

OFFICE OF PETITIONS

RATNERPRESTIA
P.O. BOX 980
VALLEY FORGE, PA 19482

In re Application of John E. Siedlarz Application No. 12/607,297 Filed: October 28, 2009 Attorney Docket No. NBS-100US1	: : : : :	DECISION ON PETITION TO WITHDRAW FROM RECORD

This is a decision on the renewed Request to Withdraw as attorney or agent of record under 37 CFR §§ 1.36(b) or 37 CFR 10.40, filed January 18, 2012.

The request is **NOT APPROVED**.

The requested change of correspondence address in the present request is improper. The Office will only accept correspondence address changes to the most current address Information provided for the assignee of the entire interest *that properly became of record under 37 CFR 3.71*, or, if no assignee of the entire interest has properly been made of record, the most current address information provided for the first named inventor. Therefore, the Office cannot change the correspondence address to the address on the Request to Withdraw at this present time.

Petitioner should note that an assignee becomes of record either in a national patent application or a reexamination proceeding by filing a statement in compliance with § 3.73(b) that is signed by a party who is authorized to act on behalf of the assignee[1].

Additionally, the Office will no longer change the correspondence address to that of a new practitioner unless the Request is accompanied by a power of attorney to a new practitioner (*See* USPTO Form PTO/SB/82).

All future communications from the Office will continue to be directed to the above-listed address until otherwise notified by applicant.

Telephone inquiries concerning this decision should be directed to the undersigned at (571) 272-3226.

/Andrea Smith/
Andrea Smith
Petitions Examiner
Office of Petitions

cc: National Biometric Security Project
c/o Richard R. Gill
60 Old Glen Road
Morristown, NJ 07960

[1] *See* USPTO Form No. PTO/SB/96.

UNITED STATES PATENT AND TRADEMARK OFFICE

COMMISSIONER FOR PATENTS
UNITED STATES PATENT AND TRADEMARK OFFICE
P.O. BOX 1450
ALEXANDRIA, VA 22313-1450
www.uspto.gov

Paper No.

GlaxoSmithKline
GLOBAL PATENTS -US, UW2220
P. O. BOX 1539
KING OF PRUSSIA PA 19406-0939

MAILED
JAN 04 2011
OFFICE OF PETITIONS

In re Application of	:	
Muller et al.	:	
Application No. 12/607,305	:	ON PETITION
Filed: October 28, 2009	:	
Attorney Docket No. PU62444C3	:	

This is a decision on the "PETITION UNDER 37 CFR § 1.182" filed September 27, 2010, requesting that a terminal disclaimer filed February 23, 2010 be withdrawn as unnecessary.

The petition is **GRANTED**.

The terminal disclaimer filed on February 23, 2010, is hereby **WITHDRAWN**.

Petitioner argues that the terminal disclaimer is not needed as the response filed on September 27, 2010 removed WO 03/098992 as effective prior art and the disclosure in U.S. Patent No. 7,547,719 is the same as the cited reference WO 03/098992. The examiner states that the terminal disclaimer does not apply to any claim currently of record. Thus, according to the examiner, it is permissible to withdraw the terminal disclaimer.

It should be noted that this decision is not a determination that the subject matter of the current claims is distinct from the claims in the patents and/or applications to which the terminal disclaimer applied.

Receipt of the petition fee of $400 is acknowledged.

Technology Center AU 1626 has been advised of this decision. The application is being referred to the Technology Center for further action in light of this decision, including withdrawal of the terminal disclaimer filed on February 23, 2010.

Telephone inquiries concerning this decision may be directed to the undersigned at 571-272-3219.

Nancy Johnson
Senior Petitions Attorney
Office of Petitions

UNITED STATES PATENT AND TRADEMARK OFFICE

Commissioner for Patents
United States Patent and Trademark Office
P.O. Box 1450
Alexandria, VA 22313-1450
www.uspto.gov

STAAS & HALSEY LLP
SUITE 700
1201 NEW YORK AVENUE, N.W.
WASHINGTON DC 20005

MAILED
JUN 01 2011
OFFICE OF PETITIONS

In re Application of:
Fumio Aoki
Application No. 12/607,306
Filed: October 28, 2009
Attorney Docket No. 2221.1209

DECISION ON PETITION

This is a decision on the petition, filed April 15, 2011, which is being treated as a petition under 37 CFR 1.181 (no fee) requesting withdrawal of the holding of abandonment in the above-identified application.

The petition is **GRANTED**.

The application was held abandoned for failure to reply in a timely manner to the Restriction Requirement, mailed September 29, 2010 , which set a shortened statutory period for reply of one (1) month or thirty (30) days (whichever is later). No extensions of time under the provisions of 37 CFR 1.136(a) were obtained.

Petitioner asserts that the Office action dated March 2, 2010, was not received.

A review of the written record indicates no irregularity in the mailing of the Office action and, in the absence of any irregularity, there is a strong presumption that the Office action was properly mailed to the practitioner at the address of record. This presumption may be overcome by a showing that the Office action was not in fact received. In this regard, the showing required to establish the failure to receive the Office action must consist of the following:

(1) A statement from the practitioner describing the system used for recording an Office action received at the correspondence address of record with the USPTO. The statement should establish that the docketing system is sufficiently reliable.

(2) A statement from the practitioner that the Office action was not received at the correspondence address of record, and that a search of the practitioner's record(s), including any file jacket or the equivalent, and the application contents, indicates that the Office action was not received.

(3) A copy of the record(s) used by the practitioner where the non-received Office action would have been entered had it been received is required. A copy of the practitioner's record(s) required to show non-receipt of the Office action should include the master docket for the firm.

See MPEP § 711.03(c) under subheading "Petition to Withdraw Holding of Abandonment Based on Failure to Receive Office Action," and "Withdrawing the Holding of Abandonment When Office Actions Are Not Received," 1156 Official Gazette 53 (November 16, 1993).

The petition satisfies the above-stated requirements. The Notice of Abandonment is hereby vacated and the holding of abandonment withdrawn.

This application is being referred to the Technology Center technical support staff of Art Unit 2835 for re-mailing the Office action of September 29, 2010. The period for reply will run from the mailing date of the Office action.

Telephone inquiries concerning this decision should be directed to Alicia Kelley-Collier at (571) 272-6059.

/Carl Friedman/
Carl Friedman
Petitions Examiner
Office of Petitions

UNITED STATES PATENT AND TRADEMARK OFFICE

Commissioner for Patents
United States Patent and Trademark Office
P.O. Box 1450
Alexandria, VA 22313-1450
www.uspto.gov

GLAXOSMITHKLINE
GLOBAL PATENTS -US, UW2220
P. O. BOX 1539
KING OF PRUSSIA PA 19406-0939

MAILED
JAN 19 2011
OFFICE OF PETITIONS

In re Application of :
Muller, et al. :
Application No. 12/607,320 : DECISION ON PETITION
Filed: 28 October, 2009 :
Attorney Docket No. PU62444C4 :

This is a decision on the petition filed on 27 September, 2010 (supplemented with substitute disclaimer(s) on 30 November and 2 December, 2010), requesting pursuant to the regulations at 37 C.F.R §1.182 that the acceptance of the terminal disclaimer originally filed herein on 23 February, 2010, be withdrawn

NOTE:

Petitioner has filed of record a request for withdrawal of a Terminal Disclaimer (TD) previously filed, but does not appear to have conferred with the Examiner so as to have an Interview Summary entered into the record to make clear the whether or not the Examiner concurs in the request.

Such a document, though not required, often may assist the Office of Petitions in expediting Petitioner's request.

The petition pursuant to 37 C.F.R §1.182 is **GRANTED**.

BACKGROUND

On 27 September, 2010, Petitioner filed a petition (with fee) pursuant to the regulations at 37 C.F.R §1.182 requesting that the acceptance of the terminal disclaimer (TD) originally filed herein on 23 February, 2010, be withdrawn.[1] Petitioner averred that the original statement of the TD as to the cited reference WO 03/098992 was no longer applicable because the response filed

[1] In the petition, Petitioner averred that substitute terminal disclaimer(s) was/were being submitted, and that U.S. Patent No. 7,547,719—included in the prior terminal disclaimer—is not included in the substitute disclaimer(s) now submitted.

contemporaneously with the petition no longer included the WO 03/098992 reference associated with the U.S. Patent No. 7,547,719 (the '719 patent), and, thus, removed the need for a TD as to '719 patent.

This application is but one of several formerly citing WO 03/098992 reference. The Examiner previously considered the TD as to, *inter alia*, Application No. 12/607,284 (the '284 application), and set forth in a communication to the Office of Petitions on 23 December, 2010 (in response to an inquiry from the Office of Petitions on 20 December, 2010), with regard to the '284 application his concurrence in the withdrawal of the TD therein. Thereafter the Examiner indicated in a communication to the Office of Petitions of 27 December, 2010, that his concurrence as to the '284 application applied to several other applications, including the instant application.

The guidance in the Commentary at MPP §1490 provides in pertinent part:

***

VII.WITHDRAWING A RECORDED TERMINAL DISCLAIMER

If timely requested, a recorded terminal disclaimer may be withdrawn before the application in which it is filed issues as a patent, or in a reexamination proceeding, before the reexamination certificate issues. After a patent or reexamination certificate issues, it is unlikely that a recorded terminal disclaimer will be nullified.

A. Before Issuance Of Patent

While the filing and recordation of an unnecessary terminal disclaimer has been characterized as an "unhappy circumstance" in *In re Jentoft*, 392 F.2d 633, 157 USPQ 363 (CCPA 1968), there is no statutory prohibition against nullifying or otherwise canceling the effect of a recorded terminal disclaimer which was erroneously filed before the patent issues. *>Because< the terminal disclaimer would not take effect until the patent is granted, and the public has not had the opportunity to rely on the terminal disclaimer, relief from this unhappy circumstance may be available by way of petition or by refiling the application (other than by refiling it as a CPA).

Under appropriate circumstances, consistent with the orderly administration of the examination process, the nullification of a recorded terminal disclaimer may be addressed by filing a petition under 37 CFR §1.182 requesting withdrawal of the recorded terminal disclaimer. Petitions seeking to reopen the question of the propriety of the double patenting rejection that prompted the filing of the terminal disclaimer have not been favorably considered. The filing of a continuing application other than a CPA, while abandoning the application in which the terminal disclaimer has been filed, will typically nullify the effect of a terminal disclaimer. The filing of a Request for Continued Examination (RCE) of an application under 37 CFR §1.114 will not nullify the effect of a

terminal disclaimer, *>because< a new application has not been filed, but rather prosecution has been continued in the existing application. (Emphasis supplied.)

***

It appears as of this writing that the barriers to withdrawal of the 23 February, 2010, TD have been removed.

Accordingly, the petition is **granted**.

This application is released to the Technology Center/AU 1626 for further processing in due course.

While telephone inquiries regarding this decision may be directed to the undersigned at (571) 272-3214, it is noted that all practice before the Office is in writing (see: 37 C.F.R. §1.2[2]) and the proper authority for action on any matter in this regard are the statutes (35 U.S.C.), regulations (37 C.F.R.) and the commentary on policy (MPEP). Therefore, no telephone discussion may be controlling or considered authority for Petitioner's/Caller's action(s).

/John J. Gillon, Jr./
John J. Gillon, Jr.
Senior Attorney
Office of Petitions

[2] The regulations at 37 C.F.R. §1.2 provide:

§1.2 Business to be transacted in writing.

All business with the Patent and Trademark Office should be transacted in writing.The personal attendance of applicants or their attorneys or agents at the Patent and Trademark Office is unnecessary. The action of the Patent and Trademark Office will be based exclusively on the written record in the Office. No attention will be paid to any alleged oral promise, stipulation,or understanding in relation to which there is disagreement or doubt.

UNITED STATES PATENT AND TRADEMARK OFFICE

Commissioner for Patents
United States Patent and Trademark Office
P.O. Box 1450
Alexandria, VA 22313-1450
www.uspto.gov

GLAXOSMITHKLINE
GLOBAL PATENTS -US, UW2220
P. O. BOX 1539
KING OF PRUSSIA PA 19406-0939

MAILED

JAN 19 2011

OFFICE OF PETITIONS

In re Application of
Muller, et al.
Application No. 12/607,330
Filed: 28 October, 2009
Attorney Docket No. PU62444C5

DECISION ON PETITION

This is a decision on the petition filed on 27 September, 2010 (supplemented with substitute disclaimer(s) on 30 November and 1 December, 2010), requesting pursuant to the regulations at 37 C.F.R §1.182 that the acceptance of the terminal disclaimer originally filed herein on 23 February, 2010, be withdrawn

NOTE:

Petitioner has filed of record a request for withdrawal of a Terminal Disclaimer (TD) previously filed, but does not appear to have conferred with the Examiner so as to have an Interview Summary entered into the record to make clear the whether or not the Examiner concurs in the request.

Such a document, though not required, often may assist the Office of Petitions in expediting Petitioner's request.

The petition pursuant to 37 C.F.R §1.182 is **GRANTED**.

BACKGROUND

On 27 September, 2010, Petitioner filed a petition (with fee) pursuant to the regulations at 37 C.F.R §1.182 requesting that the acceptance of the terminal disclaimer (TD) originally filed herein on 23 February, 2010, be withdrawn.[1] Petitioner averred that the original statement of the TD as to the cited reference WO 03/098992 was no longer applicable because the response filed

[1] In the petition, Petitioner averred that substitute terminal disclaimer(s) was/were being submitted, and that U.S. Patent No. 7,547,719—included in the prior terminal disclaimer—is not included in the substitute disclaimer(s) now submitted.

contemporaneously with the petition no longer included the WO 03/098992 reference associated with the U.S. Patent No. 7,547,719 (the '719 patent), and, thus, removed the need for a TD as to '719 patent.

This application is but one of several formerly citing WO 03/098992 reference. The Examiner previously considered the TD as to, *inter alia*, Application No. 12/607,284 (the '284 application), and set forth in a communication to the Office of Petitions on 23 December, 2010 (in response to an inquiry from the Office of Petitions on 20 December, 2010), with regard to the '284 application his concurrence in the withdrawal of the TD therein. Thereafter the Examiner indicated in a communication to the Office of Petitions of 27 December, 2010, that his concurrence as to the '284 application applied to several other applications, including the instant application.

The guidance in the Commentary at MPP §1490 provides in pertinent part:

***

VII.WITHDRAWING A RECORDED TERMINAL DISCLAIMER

If timely requested, a recorded terminal disclaimer may be withdrawn before the application in which it is filed issues as a patent, or in a reexamination proceeding, before the reexamination certificate issues. After a patent or reexamination certificate issues, it is unlikely that a recorded terminal disclaimer will be nullified.

A. Before Issuance Of Patent

While the filing and recordation of an unnecessary terminal disclaimer has been characterized as an "unhappy circumstance" in *In re Jentoft*, 392 F.2d 633, 157 USPQ 363 (CCPA 1968), there is no statutory prohibition against nullifying or otherwise canceling the effect of a recorded terminal disclaimer which was erroneously filed before the patent issues. *>Because< the terminal disclaimer would not take effect until the patent is granted, and the public has not had the opportunity to rely on the terminal disclaimer, relief from this unhappy circumstance may be available by way of petition or by refiling the application (other than by refiling it as a CPA).

Under appropriate circumstances, consistent with the orderly administration of the examination process, the nullification of a recorded terminal disclaimer may be addressed by filing a petition under 37 CFR §1.182 requesting withdrawal of the recorded terminal disclaimer. Petitions seeking to reopen the question of the propriety of the double patenting rejection that prompted the filing of the terminal disclaimer have not been favorably considered. The filing of a continuing application other than a CPA, while abandoning the application in which the terminal disclaimer has been filed, will typically nullify the effect of a terminal disclaimer. The filing of a Request for Continued Examination (RCE) of an application under 37 CFR §1.114 will not nullify the effect of a

> terminal disclaimer, *>because< a new application has not been filed, but rather prosecution has been continued in the existing application. (Emphasis supplied.)
>
> ***

It appears as of this writing that the barriers to withdrawal of the 23 February, 2010, TD have been removed.

Accordingly, the petition is **granted**.

This application is released to the Technology Center/AU 1626 for further processing in due course.

While telephone inquiries regarding this decision may be directed to the undersigned at (571) 272-3214, it is noted that all practice before the Office is in writing (see: 37 C.F.R. §1.2[2]) and the proper authority for action on any matter in this regard are the statutes (35 U.S.C.), regulations (37 C.F.R.) and the commentary on policy (MPEP). Therefore, no telephone discussion may be controlling or considered authority for Petitioner's/Caller's action(s).

/John J. Gillon, Jr./
John J. Gillon, Jr.
Senior Attorney
Office of Petitions

---

[2] The regulations at 37 C.F.R. §1.2 provide:

§1.2 Business to be transacted in writing.

All business with the Patent and Trademark Office should be transacted in writing.The personal attendance of applicants or their attorneys or agents at the Patent and Trademark Office is unnecessary. The action of the Patent and Trademark Office will be based exclusively on the written record in the Office. No attention will be paid to any alleged oral promise, stipulation,or understanding in relation to which there is disagreement or doubt.

UNITED STATES PATENT AND TRADEMARK OFFICE

Commissioner for Patents
United States Patent and Trademark Office
P.O. Box 1450
Alexandria, VA 22313-1450
www.uspto.gov

CHOATE, HALL & STEWART / CITRIX SYSTEMS, INC.
TWO INTERNATIONAL PLACE
BOSTON MA 02110

MAILED

DEC 06 2010

OFFICE OF PETITIONS

In re Application of	:	
Allen R. Samuels et al.	:	
Application No. 12/607,365	:	DECISION ON PETITION
Filed: October 28, 2009	:	TO WITHDRAW
Attorney Docket No. 2006579-1844 (CTX-286CON	:	FROM RECORD

This is a decision on the Request to Withdraw as attorney or agent of record under 37 C.F.R. § 1.36(b), filed November 10, 2010.

The request is **NOT APPROVED.**

The Office will no longer accept address changes to a new practitioner or law firm filed with a Request, absent the filing of a power of attorney to the new representative. The Office will either change the correspondence address of record to the most current address information provided for the assignee of the entire interest who properly became of record under 37 CFR 3.71 or, if no assignee of the entire interest has properly been made of record under 37 CFR 3.71, the most current address information provided for the first named inventor.

Accordingly, the request to withdraw from record cannot be approved because the request to change the correspondence address is not that of: (1) the first named inventor; or (2) an assignee of the entire interest under 37 C.F.R 3.71. If an assignee has ownership in this application, then a current Statement under 37 CFR 3.73(b) or a copy of the actual assignment must be provided with a renewed request.

All future communications from the Office will continue to be directed to the above-identified address until otherwise properly notified.

Telephone inquiries concerning this decision should be directed to the undersigned at 571-272-4618.

/Kimberly Inabinet/

Kimberly Inabinet
Petitions Examiner
Office of Petitions

UNITED STATES PATENT AND TRADEMARK OFFICE

Commissioner for Patents
United States Patent and Trademark Office
P.O. Box 1450
Alexandria, VA 22313-1450
www.uspto.gov

Decision Date : February 13, 2012

In re Application of :

Kuang-Hsiung Chen

Application No : 12607405

Filed : 28-Oct-2009

Attorney Docket No : ASEG-050/00US 307632-2078

DECISION ON REQUEST TO WITHDRAW AS ATTORNEY/AGENTOF RECORD

This is an electronic decision on the Request to Withdraw as attorney or agent of record under 37 CFR § 1.36(b), filed February 13, 2012

The request is **APPROVED.**

The request was signed by William S. Galliani (registration no. 33885) on behalf of all attorneys/agents associated with Customer Number 58249 . All attorneys/agents associated with Cusotmer Number 58249 have been withdrawn.

Since there are no remaining attorneys of record, all future communications from the Office will be directed to the first named inventor or assignee that has properly made itself of record pursuant to 37 CFR 3.71, with correspondence address:

Name	Advanced Semiconductor Engineering, Inc.
Name2	c/o Foley & Lardner
Address 1	975 Page Mill Road
Address 2	
City	Palo Alto
State	CA
Postal Code	94304
Country	US

As a reminder, requester is required to inform the first named inventor or assignee that has properly made itself of record pursuant to 37 CFR 3.71 of the electronically processed petition.

Telephone inquiries concerning this decision should be directed to the Patent Electronic Business Center (EBC) at 866-217-9197.

Office of Petitions

Doc Code: PET.AUTO **Document Description: Petition automatically granted by EFS-Web**	PTO/SB/83 U.S. Patent and Trademark Office Department of Commerce

Electronic Petition Request	**REQUEST FOR WITHDRAWAL AS ATTORNEY OR AGENT AND CHANGE OF CORRESPONDENCE ADDRESS**
Application Number	12607405
Filing Date	28-Oct-2009
First Named Inventor	Kuang-Hsiung Chen
Art Unit	2823
Examiner Name	SHEILA CLARK
Attorney Docket Number	ASEG-050/00US 307632-2078
Title	SEMICONDUCTOR PACKAGE

◉ Please withdraw me as attorney or agent for the above identified patent application and the practitioners of record associated with Customer Number: 58249

The reason(s) for this request are those described in 37 CFR:

10.40(b)(4)

Certifications

☒ I/We have given reasonable notice to the client, prior to the expiration of the response period, that the practitioner(s) intend to withdraw from employment

☒ I/We have delivered to the client or a duly authorized representative of the client all papers and property (including funds) to which the client is entitled

☒ I/We have notified the client of any responses that may be due and the time frame within which the client must respond

Change the correspondence address and direct all future correspondence to the first named inventor or assignee that has properly made itself of record pursuant to 37 CFR 3.71:

Name	Advanced Semiconductor Engineering, Inc. c/o Foley & Lardner
Address	975 Page Mill Road
City	Palo Alto
State	CA
Postal Code	94304
Country	US

I am authorized to sign on behalf of myself and all withdrawing practitioners.	
Signature	/William S. Galliani/
Name	William S. Galliani
Registration Number	33885

UNITED STATES PATENT AND TRADEMARK OFFICE

Commissioner for Patents
United States Patent and Trademark Office
P.O. Box 1450
Alexandria, VA 22313-1450
www.uspto.gov

FOLEY AND LARDNER, LLP
SUITE 500
3000 K STREET NW
WASHINGTON, DC 20007

MAILED

MAR 05 2012

OFFICE OF PETITIONS

In re Application of Peter Depew Fiset, et al. Application No. 12/607,446 Filed: October 28, 2009 Attorney Docket No. 043844-0123	DECISION ON PETITION TO WITHDRAW FROM RECORD

This is a decision on the Request to Withdraw as attorney or agent of record under 37 C.F.R. § 1.36(b), filed February 22, 2012.

The request is **APPROVED**.

A grantable request to withdraw as attorney/agent of record must be signed by every attorney/agent seeking to withdraw or contain a clear indication that one attorney is signing on behalf of another/others.

The request was signed by Stephen B. Maebius on behalf of all attorneys of record who are associated with customer No. 22428. All attorneys/agents associated with the Customer Number 22428 have been withdrawn. Applicant is reminded that there is no attorney of record at this time.

The correspondence address of record has been changed and the new correspondence address is the address indicated below.

There are no pending Office actions at the present time.

Telephone inquiries concerning this decision should be directed to undersigned at 571-272-1642. All other inquiries concerning the examination or status of this application should be directed to the Technology Center.

/AMW/
April M. Wise
Petitions Examiner
Office of Petitions

cc: PETER DEPEW FISET
5 UPPER LOUDON ROAD
LOUDONVILLE, NY 12211-1635

UNITED STATES PATENT AND TRADEMARK OFFICE

UNITED STATES DEPARTMENT OF COMMERCE
United States Patent and Trademark Office
Address: COMMISSIONER FOR PATENTS
P.O. Box 1450
Alexandria, Virginia 22313-1450
www.uspto.gov

APPLICATION NUMBER	FILING OR 371(C) DATE	FIRST NAMED APPLICANT	ATTY. DOCKET NO./TITLE
12/607,446	10/28/2009	Peter Depew Fiset	043844-0123

CONFIRMATION NO. 4592

POWER OF ATTORNEY NOTICE

22428
FOLEY AND LARDNER LLP
SUITE 500
3000 K STREET NW
WASHINGTON, DC 20007

OC000000052811160

Date Mailed: 02/27/2012

NOTICE REGARDING CHANGE OF POWER OF ATTORNEY

This is in response to the Power of Attorney filed 02/22/2012.

- The withdrawal as attorney in this application has been accepted. Future correspondence will be mailed to the new address of record. 37 CFR 1.33.

/amwise/

Office of Data Management, Application Assistance Unit (571) 272-4000, or (571) 272-4200, or 1-888-786-0101

UNITED STATES PATENT AND TRADEMARK OFFICE

Commissioner for Patents
United States Patent and Trademark Office
P.O. Box 1450
Alexandria, VA 22313-1450
www.uspto.gov

Synageva BioPharma Corp.
111 RIVERBEND ROAD
ATHENS GA 30605

MAILED

SEP 30 2010

OFFICE OF PETITIONS

In re Application of	:	
Jeffrey C. Rapp	:	
Application No. 12/607,488	:	DECISION ON PETITION
Filed: October 28, 2009	:	
Attorney Docket No. SYN-007CON	:	

This is a decision on the petition, filed August 6, 2010, which is being treated as a petition under 37 CFR 1.8(b), requesting withdrawal of the holding of abandonment in the above-identified application.

The petition is **GRANTED**.

This application was held abandoned for failure to timely respond to the Notice to File Missing Parts of Nonprovisional Application of November 17, 2009, which set a two (2) month shortened statutory period for reply. Accordingly, a reply was due on or before January 17, 2010, or, on or before March 17, 2010, with a two (2)-month extension of time. A Notice of Abandonment was mailed July 26, 2010.

Petitioner states that a timely reply was faxed via certificate of facsimile on February 22, 2010, which included the following papers: a signed declaration/oath, a request for two extension of time and fee transmittal for charging the $65 surcharge. Petitioner has submitted a copy of the previously faxed correspondence, which bears a certificate of facsimile dated February 22, 2010, which would have rendered the reply timely if received.

The file record does not include the originally submitted papers. Failure to receive correspondence which includes a certificate of mailing or certificate of facsimile transmission is addressed in 37 CFR 1.8(b), reproduced below:

> In the event that correspondence is considered timely filed by being mailed or transmitted in accordance with paragraph (a) of this section, but not received in the U.S. Patent and Trademark Office after a reasonable amount of time has elapsed from the time of mailing or transmitting of the correspondence, or after the application is held to be abandoned, or after the proceeding is

dismissed, terminated, or decided with prejudice, the correspondence will be considered timely if the party who forwarded such correspondence:

(1) Informs the Office of the previous mailing or transmission of the correspondence promptly after becoming aware that the Office has no evidence of receipt of the correspondence;

(2) Supplies an additional copy of the previously mailed or transmitted correspondence and certificate; and

(3) Includes a statement which attests on a personal knowledge basis or to the satisfaction of the Director to the previous timely mailing or transmission. If the correspondence was sent by facsimile transmission, a copy of the sending unit's report confirming transmission may be used to support this statement.

The petition satisfies the above requirements of 37 CFR 1.8(b). Accordingly, the holding of abandonment for failure to timely file a reply to the Notice of November 17, 2009 is hereby withdrawn and the application restored to pending status.

The copy of the reply received with the petition will be accepted in place of the reply shown to have been mailed (or transmitted by facsimile) on February 22, 2010.

Telephone inquiries regarding this decision should be directed to Terri Johnson at (571) 272-2991.

This application is being referred to the Office of Patent Application Processing for appropriate action in the normal course of business on the reply received with petition.

/Ramesh Krishnamurthy/
Ramesh Krishnamurthy
Petitions Examiner
Office of Petitions

UNITED STATES PATENT AND TRADEMARK OFFICE

UNITED STATES DEPARTMENT OF COMMERCE
United States Patent and Trademark Office
Address: COMMISSIONER FOR PATENTS
P.O. Box 1450
Alexandria, Virginia 22313-1450
www.uspto.gov

APPLICATION NO.	FILING DATE	FIRST NAMED INVENTOR	ATTORNEY DOCKET NO.	CONFIRMATION NO.
12/607,523	10/28/2009	Shailesh K. Agrahari	SHA001 P462	4709

277 7590 09/09/2010
PRICE HENEVELD COOPER DEWITT & LITTON, LLP
695 KENMOOR, S.E.
P O BOX 2567
GRAND RAPIDS, MI 49501

EXAMINER
ENGLE, PATRICIA LYNN

ART UNIT	PAPER NUMBER
3612	

MAIL DATE	DELIVERY MODE
09/09/2010	PAPER

Please find below and/or attached an Office communication concerning this application or proceeding.

The time period for reply, if any, is set in the attached communication.

UNITED STATES PATENT AND TRADEMARK OFFICE

SEP - 9 2010

Commissioner for Patents
United States Patent and Trademark Office
P.O. Box 1450
Alexandria, VA 22313-1450
www.uspto.gov

PRICE HENEVELD COOPER DEWITT & LITTON, LLP
695 KENMOOR, S.E.
P O BOX 2567
GRAND RAPIDS MI 49501

In re application of Agrahari et al Application No. 12/607523 Filed: October 28, 2009 For: BUMPER BEAM MULTI-CONCAVITY-DEFINING CROSS SECTION	:	**DECISION ON REQUEST TO PARTICIPATE IN PATENT PROSECUTION HIGHWAY PROGRAM AND PETITION TO MAKE SPECIAL UNDER 37 CFR 1.102(d)**

This is a decision on the request to participate in the Patent Prosecution Highway (PPH) program and the petition under 37 CFR 1.102(d), filed July 23, 2010, to make the above-identified application special.

The request and petition are **DISMISSED**.

A grantable request to participate in the PPH program and petition to make special require:

(1) The U.S. application must disclose an eligible relationship to one or more PCT applications filed in the JPO, EPO or USPTO;
(2) Applicant must submit a copy of the allowable/patentable claim(s) from the PCT application(s) latest international work product (the written opinion or the IPER) along with an English translation thereof and a statement that the English translation is accurate;
(3) All the claims in the U.S. application must sufficiently correspond or be amended to sufficiently correspond to the allowable/patentable claim(s) in the PCT application(s);
(4) Examination of the U.S. application has not begun;
(5) Applicant must submit a copy of the latest international work product from the PCT application containing the allowable/patentable claim(s) along with an English translation thereof and a statement that the English translation is accurate;
(6) Applicant must submit an IDS listing the documents cited by the PCT examiner in the international work product along with copies of documents except U.S. patents or U.S. patent application publications; and

The request to participate in the PPH pilot program and petition fail to include:
2) Applicant must submit a copy of the allowable/patentable claim(s) from the PCT application(s) latest international work product (the written opinion or the IPER) along with an English translation thereof and a statement that the English translation is accurate.
Copy of the allowable/patentable claims from the PCT/US2009/062539 is missing.

(3) All the claims in the U.S. application must sufficiently correspond or be amended to sufficiently correspond to the allowable/patentable claim(s) in the PCT application(s); See (2) above.

Applicant is given a time period of **ONE MONTH or THIRTY DAYS**, whichever is longer, to correct the deficiencies. **NO EXTENSION OF TIME UNDER 37 CFR 1.136 IS PERMITTED.** If the deficiencies are not corrected with the time period given, the application will await action in its regular turn. All replies to a decision to dismiss must be submitted by EFS-Web using the document description "Petition to make special under Patent Prosecution Highway."

Any inquiry regarding this decision should be directed to Mikado Buiz, Quality Assurance Specialist, at (571) 272-6578.

/ Mikado Buiz /
Mikado Buiz,
Quality Assurance Specialist
Technology Center 3600

MB/MB: 9/8/10

PTO/SB/20PCT-KR (06-10)
Approved for use through 01/31/2012. OMB 0651-0058
U.S. Patent and Trademark Office; U. S. DEPARTMENT OF COMMERCE
Under the Paperwork Reduction Act of 1995, no persons are required to respond to a collection of information unless it displays a valid OMB control number.

REQUEST FOR PARTICIPATION IN THE PATENT COOPERATION TREATY - PATENT PROSECUTION HIGHWAY (PCT-PPH) PILOT PROGRAM BETWEEN THE KOREAN INTELLECTUAL PROPERTY OFFICE (KIPO) AND THE USPTO

Application No:	12607523	Filing date:	October 28, 2009
First Named Inventor:	Shailesh K. Agrahari		
Title of the Invention:	Bumper Beam Multi-Concavity-Defining Cross Section		

THIS REQUEST FOR PARTICIPATION IN THE PCT-PPH PILOT PROGRAM ALONG WITH THE REQUIRED DOCUMENTS MUST BE SUBMITTED VIA EFS-WEB. INFORMATION REGARDING EFS-WEB IS AVAILABLE AT HTTP://WWW.USPTO.GOV/EBC/EFS_HELP.HTML

APPLICANT HEREBY REQUESTS PARTICIPATION IN THE PCT-PPH PROGRAM AND PETITIONS TO MAKE THE ABOVE-IDENTIFIED APPLICATION SPECIAL UNDER THE PCT-PPH PROGRAM.

The above-identified application is (1) a national stage entry of the corresponding PCT application, or (2) a national stage entry of another PCT application which claims priority to the corresponding PCT application, or (3) a national application that claims domestic/ foreign priority to the corresponding PCT application, or (4) a national application which forms the basis for the priority claim in the corresponding PCT application, or (5) a continuing application of a U.S. application that satisfies one of (1) to (4) above, or (6) a U.S. application that claims domestic benefit to a U.S. provisional application which forms the basis for the priority claim in the corresponding PCT application.

The corresponding PCT application number(s) is/are: PCT/US2009/062539

The international date of the corresponding PCT application(s) is/are: October 29, 2009

I. List of Required Documents:

a. **A copy of the latest international work product (WO/ISA, WO/IPEA, or IPER) in the above–identified corresponding PCT application(s)**

- [x] Is attached.
- [ ] Is not attached because the document is already in the U.S. application.

b. **A copy of all claims which were indicated as having novelty, inventive step and industrial applicability in the above-identified corresponding PCT application(s).**

- [x] Is attached.
- [ ] Is not attached because the document is already in the U.S. application.

c. **English translations of the documents in a. and b. above are attached (if the documents are not in the English language). A statement that the English translation is accurate is attached for the document in b. above.**

This collection of information is required by 35 U.S.C. 119, 37 CFR 1.55, and 37 CFR 1.102(d). The information is required to obtain or retain a benefit by the public, which is to file (and by the USPTO to process) an application. Confidentiality is governed by 35 U.S.C. 122 and 37 CFR 1.11 and 1.14. This collection is estimated to take 2 hours to complete, including gathering, preparing, and submitting the completed application form to the USPTO. Time will vary depending upon the individual case. Any comments on the amount of time you require to complete this form and/or suggestions for reducing this burden should be sent to the Chief Information Officer, U.S. Patent and Trademark Office, U.S. Department of Commerce, P.O. Box 1450, Alexandria, VA 22313-1450. DO NOT SEND FEES OR COMPLETED FORMS TO THIS ADDRESS.

Approved for use through 01/31/2012. OMB 0651-0058
U.S.Patent and Trademark Office; U.S. DEPARTMENT OF COMMERCE
Under the Paperwork Reduction Act of 1995, no persons are required to respond to a collection of information unless it displays a valid OMB control number.

REQUEST FOR PARTICIPATION IN THE PCT-PPH PILOT PROGRAM BETWEEN THE KIPO AND THE USPTO

(continued)

Application No.:	12607523
First Named Inventor:	Shailesh K. Agrahari

d. **(1) An information disclosure statement listing the documents cited in the international work products (ISR, WO/ISA, WO/IPEA, IPER) of the corresponding PCT application.**

☐ Is attached

☒ Has already been filed in the above-identified U.S. application on July 22, 2010

(2) Copies of all documents (except) for U.S. patents or U.S. patent application publications)

☒ Are attached.

Have already been filed in the above-identified U.S. application on July 22, 2010

II. Claims Correspondence Table:

Claims in US Application	Patentable Claims in the corresponding PCT Application	Explanation regarding the correspondence
1	1	identical
2	2	identical
3	3	identical
4	4	identical
5	5	identical
6	6	identical
7	7	identical
8	8	identical
9	9	identical
10	10	identical
11	11	identical
12	12	identical
13	13	identical
14	14	identical
15	15	identical
16	16	identical

III. All the claims in the US application sufficiently correspond to the patentable claims in the corresponding PCT application.

Signature	Date October 8, 2010
Name (Print/Typed) Marcus P. Dolce	Registration Number 46 073

PATENT COOPERATION TREATY

From the INTERNATIONAL SEARCHING AUTHORITY

To:

DOLCE MARCUS P.

PRICE, HENEVELD, COOPER, DEWITT & LITTON, LLP
695 KENMOOR, S.E. P.O. BOX 2567 GRAND RAPIDS MI
49501-2567 USA

RECEIVED
JUN 01 2010
PRICE, HENEVELD, COOPER
DEWITT & LITTON, LLP
PER

PCT

NOTIFICATION OF TRANSMITTAL OF THE INTERNATIONAL SEARCH REPORT AND THE WRITTEN OPINION OF THE INTERNATIONAL SEARCHING AUTHORITY, OR THE DECLARATION

(PCT Rule 44.1)

	Date of mailing *(day/month/year)* 25 MAY 2010 (25.05.2010)
Applicant's or agent's file reference SHA0010462WO	**FOR FURTHER ACTION** See paragraphs 1 and 4 below
International application No. **PCT/US2009/062539**	International filing date *(day/month/year)* **29 OCTOBER 2009 (29.10.2009)**

Applicant

NETSHAPE ENERGY MANAGEMENT, LLC et al

1. ☒ The applicant is hereby notified that the international search report and the written opinion of the International Searching Authority have been established and are transmitted herewith.
Filing of amendments and statement under Article 19:
The applicant is entitled, if he so wishes, to amend the claims of the international application (see Rule 46):
When? The time limit for filing such amendments is normally two months from the date of transmittal of the international search report.
Where? Directly to the International Bureau of WIPO, 34 chemin des Colombettes 1211 Geneva 20, Switzerland, Facsimile No.: +41 22 338 82 70
For more detailed instructions, see the notes on the accompanying sheet.

2. ☐ The applicant is hereby notified that no international search report will be established and that the declaration under Article 17(2)(a) to that effect and the written opinion of the International Searching Authority are transmitted herewith.

3. ☐ **With regard to any protest** against payment of (an) additional fee(s) under Rule 40.2, the applicant is notified that:
☐ the protest together with the decision thereon has been transmitted to the International Bureau together with the applicant's request to forward the texts of both the protest and the decision thereon to the designated Offices.
☐ no decision has been made yet on the protest; the applicant will be notified as soon as a decision is made.

4. **Reminders**
Shortly after the expiration of **18 months** from the priority date, the international application will be published by the International Bureau. If the applicant wishes to avoid or postpone publication, a notice of withdrawal of the international application, or of the priority claim, must reach the International Bureau as provided in Rules 90*bis*.1 and 90*bis*.3, respectively, before the completion of the technical preparations for international publication.

The applicant may submit comments on an informal basis on the written opinion of the International Searching Authority to the International Bureau. The International Bureau will send a copy of such comments to all designated Offices unless an international preliminary examination report has been or is to be established. These comments would also be made available to the public but not before the expiration of 30 months from the priority date.

Within **19 months** from the priority date, but only in respect of some designated Offices, a demand for international preliminary examination must be filed if the applicant wishes to postpone the entry into the national phase **until 30 months** from the priority date (in some Offices even later); otherwise, the applicant must, **within 20 months** from the priority date, perform the prescribed acts for entry into the national phase before those designated Offices.

In respect of other designated Offices, the time limit of **30 months** (or later) will apply even if no demand is filed within 19 months.

See the Annex to Form PCT/IB/301 and, for details about the applicable time limits, Office by Office, see the *PCT Applicant's Guide*, National Chapters.

Name and mailing address of the ISA/KR Korean Intellectual Property Office Government Complex-Daejeon, 139 Seonsa-ro, Seo-gu, Daejeon 302-701, Republic of Korea Facsimile No. 82-42-472-7140	Authorized officer COMMISSIONER Telephone No. 82-42-481-5281

NOTES TO FORM PCT/ISA/220

These Notes are intended to give the basic instructions concerning the filing of amendments under Article 19. The Notes are based on the requirements of the Patent Cooperation Treaty, the Regulations and the Administrative Instructions under that Treaty. In case of discrepancy between these Notes and those requirements, the latter are applicable. For more detailed information, see also the *PCT Applicant's Guide*.

In these Notes, "Article", "Rule" and "Section" refer to the provisions of the PCT, the PCT Regulations and the PCT Administrative Instructions, respectively.

INSTRUCTIONS CONCERNING AMENDMENTS UNDER ARTICLE 19

The applicant has, after having received the international search report and the written opinion of the International Searching Authority, one opportunity to amend the claims of the international application. It should however be emphasized that, since all parts of the international application (claims, description and drawings) may be amended during the international preliminary examination procedure, there is usually no need to file amendments of the claims under Article 19 except where, e.g. the applicant wants the latter to be published for the purposes of provisional protection or has another reason for amending the claims before international publication. Furthermore, it should be emphasized that provisional protection is available in some States only (see *PCT Applicant's Guide*, Annex B).

The attention of the applicant is drawn to the fact that ammendments to the claims under Article 19 are not allowed where the International Searching Authority has declared, under Article 17(2), that no international search report would be established (see *PCT Applicant's Guide*, paragraph 296).

What parts of the international application may be amended ?

Under Article 19, only the claims may be amended.

During the international phase, the claims may also be amended (or further amended) under Article 34 before the International Preliminary Examining Authority. The description and drawings may only be amended under Article 34 before the International Preliminary Examining Authority.

Upon entry into the national phase, all parts of the international application may be amended under Article 28 or, where applicable, Article 41.

When ? Within 2 months from the date of transmittal of the international search report or 16 months from the priority date, whichever time limit expires later. It should be noted, however, that the amendments will be considered as having been received on time if they are received by the International Bureau after the expiration of the applicable time limit but before the completion of the technical preparations for international publication (Rule 46.1).

Where not to file the amendments ?

The amendments may only be filed with the International Bureau and not with the receiving Office or the International Searching Authority (Rule 46.2).

Where a demand for international preliminary examination has been/is filed, see below.

How ? Either by cancelling one or more entire claims, by adding one or more new claims or by amending the text of one or more of the claims as filed.

A replacement sheet or sheets containing a complete set of claims in replacement of all the claims previously filed must be submitted.
Where a claim is cancelled, no renumbering of the other claims is required. In all cases where claims are renumbered, they must be renumbered consecutively .in Arabic numerals (Section 205(a)).

The amendments must be made in the language in which the international application is to be published.

What documents must/may accompany the amendments ?

Letter (Section 205(b)):

The amendments must be submitted with a letter.
The letter will not be published with the international application and the amended claims. It should not be confused with the "Statement under Article 19(1)" (see below,under "Statement under Article 19(1)").
The letter must be in English or French, at the choice of the applicant. However, if the language of the international application is English, the letter must be in English; if the language of the international application is French, the letter must be in French.

NOTES TO FORM PCT/ISA/220 (continued)

The letter must indicate the differences between the claims as filed and the claims as amended. It must, in particular, indicate, in connection with each claim appearing in the international application (it being understood that identical indications concerning several claims may be grouped), whether

(i) the claim is unchanged;
(ii) the claim is cancelled;
(iii) the claim is new;
(iv) the claim replaces one or more claims as filed;
(v) the claim is the result of the division of a claim as filed.

The following examples illustrate the manner in which amendments must be explained in the accompanying letter:

1. [Where originally there were 48 claims and after amendment of some claims there are 51]:
   "Claims 1 to 29, 31, 32, 34, 35, 37 to 48 replaced by amended claims bearing the same numbers; claims 30, 33 and 36 unchanged; new claims 49 to 51 added."
2. [Where originally there were 15 claims and after amendment of all claims there are 11]:
   "Claims 1 to 15 replaced by amended claims 1 to 11."
3. [Where originally there were 14 claims and the amendments consist in cancelling some claims and in adding new claims]:
   "Claims 1 to 6 and 14 unchanged; claims 7 to 13 cancelled; new claims 15, 16 and 17 added." or
   "Claims 7 to 13 cancelled; new claims 15, 16 and 17 added; all other claims unchanged."
4. [Where various kinds of amendments are made]:
   "Claims 1 - 10 unchanged; claims 11 to 13, 18 and 19 cancelled; claims 14, 15 and 16 replaced by amended claim 14; claim 17 subdivided into amended claims 15, 16 and 17; new claims 20 and 21 added."

"Statement under Article 19(1)" (Rule 46.4)

The amendments may be accompanied by a statement explaining the amendments and indicating any impact that such amendments might have on the description and the drawings (which cannot be amended under Article 19(1)).

The statement will be published with the international application and the amended claims.

It must be in the language in which the international application is to be published.

It must be brief, not exceeding 500 words if in English or if translated into English.

It should not be confused with and does not replace the letter indicating the differences between the claims as filed and as amended. It must be filed on a separate sheet and must be indentified as such by a heading, preferably by using the words "Statement under Article 19(1)."

It may not contain any disparaging comments on the international search report or the relevance of citations contained in that report. Reference to citations, relevant to a given claim, contained in the international search report may be made only in connection with an amendment of that claim.

Consequence if a demand for international preliminary examination has already been filed

If, at the time of filing any amendments and any accompanying statement, under Article 19, a demand for international preliminary examination has already been submitted, the applicant must preferably, at the time of filing the amendments (and any statement) with the International Bureau, also file with the International Preliminary Examining Authority a copy of such amendments (and of any statement) and, where required, a translation of such amendments for the proceduer before that Authority (see Rules 55.3(a) and 62.2, first sentence). For further information, see the Notes to the demand form (PCT/IPEA/401).

If a demand for international preliminary examination is made, the written opinion of the International Searching Authority will, except in certain cases where the International Preliminary Examining Authority did not act as International Searching Authority and where it has notified the International Bureau under Rule 66.1*bis*(b), be considered to be a written opinion of the International Preliminary Examining Authority. If a demand is made, the applicant may submit to the International Preliminary Examining Authority a reply to the written opinion together, where appropriate, with amendments before the expiration of 3 months from the date of mailing of Form PCT/ISA/220 or before the expiration of 22 months from the priority date, whichever expires later (Rule 43*bis*.1(c)).

Consequence with regard to translation of the international application for entry into the national phase

The applicant's attention is drawn to the fact that, upon entry into the national phase, a translation of the claims as amended under Article 19 may have to be furnished to the designated/elected Offices, instead of, or in addition to , the translation of the claims as filed.

For further details on the requirements of each designated/elected Office, see the *PCT Applicant's Guide*, National Chapters.

* Attention

Copies of the documents cited in the international search report can be searched in the following Korean Intellectual Property Office English website for three months from the date of mailing of the international search report.

http://www.kipo.go.kr/en/ => Patent Search => PCT-Service

ID : PCT international application number
PW : **3ZYNOID5**

Inquiries related to PCT International Search Report or Written Opinion prepared by KIPO as an International Searching Authority can be answered not only by KIPO but also through IPKC (Intellectual Property Korea Center), located in Vienna, VA, which functions as a PCT Help Desk for PCT applicants.

Homepage: http://www.ipkcenter.com
Email: ipkc@ipkcenter.com
Phone: +1 703 388 1066
Fax: +1 703 388 1084

PATENT COOPERATION TREATY

PCT

INTERNATIONAL SEARCH REPORT

(PCT Article 18 and Rules 43 and 44)

Applicant's or agent's file reference SHA0010462WO	**FOR FURTHER ACTION**	see Form PCT/ISA/220 as well as, where applicable, item 5 below.
International application No. **PCT/US2009/062539**	International filing date *(day/month/year)* **29 OCTOBER 2009 (29.10.2009)**	(Earliest) Priority Date *(day/month/year)* 30 OCTOBER 2008 (30.10.2008)
Applicant **NETSHAPE ENERGY MANAGEMENT, LLC et al**		

This International search report has been prepared by this International Searching Authority and is transmitted to the applicant according to Article 18. A copy is being transmitted to the International Bureau.

This international search report consists of a total of 3 sheets.

☐ It is also accompanied by a copy of each prior art document cited in this report.

1. **Basis of the report**
   a. With regard to the **language**, the international search was carried out on the basis of:
      ☒ the international application in the language in which it was filed
      ☐ a translation of the international application into _____, which is the language of a translation furnished for the purposes of international search (Rules 12.3(a) and 23.1(b))
   b. ☐ This international search report has been established taking into account the **rectification of an obvious mistake** authorized by or notified to this Authority under Rule 91 (Rule 43.6*bis*(a)).
   c. ☐ With regard to any **nucleotide and/or amino acid sequence** disclosed in the international application, see Box No. I.
2. ☐ **Certain claims were found unsearchable** (See Box No. II)
3. ☐ **Unity of invention is lacking** (See Box No. III)
4. With regard to the **title,**
   ☒ the text is approved as submitted by the applicant.
   ☐ the text has been established by this Authority to read as follows:
5. With regard to the **abstract,**
   ☒ the text is approved as submitted by the applicant.
   ☐ the text has been established, according to Rule 38.2, by this Authority as it appears in Box No. IV. The applicant may, within one month from the date of mailing of this international search report, submit comments to this Authority.
6. With regard to the drawings,
   a. the figure of the **drawings** to be published with the abstract is Figure No. 1
      ☒ as suggested by the applicant.
      ☐ as selected by this Authority, because the applicant failed to suggest a figure.
      ☐ as selected by this Authority, because this figure better characterizes the invention.
   b. ☐ none of the figure is to be published with the abstract.

INTERNATIONAL SEARCH REPORT

International application No.
PCT/US2009/062539

A. CLASSIFICATION OF SUBJECT MATTER

B60R 19/18(2006.01)i, B60R 19/24(2006.01)i, B60R 19/02(2006.01)i

According to International Patent Classification (IPC) or to both national classification and IPC

B. FIELDS SEARCHED

Minimum documentation searched (classification system followed by classification symbols)
B60R 19/18; B60R 19/02; B60R 19/03

Documentation searched other than minimum documentation to the extent that such documents are included in the fields searched
Korean utility models and applications for utility models
Japanese utility models and applications for utility models
(Chinese Patents and application for patent)

Electronic data base consulted during the international search (name of data base and, where practicable, search terms used)
eKOMPASS(KIPO internal) & keywords : "bumper" and "beam" and "cross section"

C. DOCUMENTS CONSIDERED TO BE RELEVANT

Category*	Citation of document, with indication, where appropriate, of the relevant passages	Relevant to claim No.
A X	US 2008-0203740 A1 (MELLIS JEFFERY JAY et al.) 28 August 2008 See the abstract; figs. 1-7; paragraphs [0016]-[0040].	1-16 17-19
A	KR 10-1997-0039259 A (DAEWOO MOTOR COMPANY) 24 July 1997 See the abstract; figs. 1-3; claim 1.	1-19
A	US 2003-0020291 A1 (THIERRY ROUSSEL et al.) 30 January 2003 See the abstract; figs. 1-8; paragraphs [0044]-[065].	1-19

☐ Further documents are listed in the continuation of Box C. ☒ See patent family annex.

* Special categories of cited documents:
"A" document defining the general state of the art which is not considered to be of particular relevance
"E" earlier application or patent but published on or after the international filing date
"L" document which may throw doubts on priority claim(s) or which is cited to establish the publication date of citation or other special reason (as specified)
"O" document referring to an oral disclosure, use, exhibition or other means
"P" document published prior to the international filing date but later than the priority date claimed
"T" later document published after the international filing date or priority date and not in conflict with the application but cited to understand the principle or theory underlying the invention
"X" document of particular relevance; the claimed invention cannot be considered novel or cannot be considered to involve an inventive step when the document is taken alone
"Y" document of particular relevance; the claimed invention cannot be considered to involve an inventive step when the document is combined with one or more other such documents,such combination being obvious to a person skilled in the art
"&" document member of the same patent family

Date of the actual completion of the international search	Date of mailing of the international search report
25 MAY 2010 (25.05.2010)	**25 MAY 2010 (25.05.2010)**
Name and mailing address of the ISA/KR Korean Intellectual Property Office Government Complex-Daejeon, 139 Seonsa-ro, Seo-gu, Daejeon 302-701, Republic of Korea Facsimile No. 82-42-472-7140	Authorized officer Lee,Sang Ho Telephone No. 82-42-481-8423

INTERNATIONAL SEARCH REPORT

Information on patent family members

International application No.

PCT/US2009/062539

Patent document cited in search report	Publication date	Patent family member(s)	Publication date
US 2008-0203740 A1	28.08.2008	CA 2570446 A1	12.01.2006
		CN 1976832 A	06.06.2007
		CN 1976832 C0	06.06.2007
		EP 1773627 A1	18.04.2007
		KR 10-2007-0022354 A	26.02.2007
		US 7665777 B2	23.02.2010
		WO 2006-002531 A1	12.01.2006
KR 10-1997-0039259 A	24.07.1997	None	
US 2003-0020291 A1	30.01.2003	DE 60225091 D1	03.04.2008
		DE 60225091 T2	05.03.2009
		EP 1277622 A1	22.01.2003
		EP 1277622 B1	20.02.2008
		ES 2300425 T3	16.06.2008
		FR 2827235 A1	17.01.2003
		FR 2827235 B1	03.10.2003
		US 6669252 B2	30.12.2003

PATENT COOPERATION TREATY

From the
INTERNATIONAL SEARCHING AUTHORITY

To:
DOLCE MARCUS P.

PRICE, HENEVELD, COOPER, DEWITT & LITTON, LLP
695 KENMOOR, S.E. P.O. BOX 2567 GRAND RAPIDS MI
49501-2567 USA

PCT

WRITTEN OPINION OF THE INTERNATIONAL SEARCHING AUTHORITY

(PCT Rule 43bis.1)

Date of mailing *(day/month/year)* **25 MAY 2010 (25.05.2010)**

Applicant's or agent's file reference
SHA0010462WO

FOR FURTHER ACTION
See paragraph 2 below

International application No.	International filing date *(day/month/year)*	Priority date *(day/month/year)*
PCT/US2009/062539	**29 OCTOBER 2009 (29.10.2009)**	30 OCTOBER 2008 (30.10.2008)

International Patent Classification (IPC) or both national classification and IPC

B60R 19/18(2006.01)i, B60R 19/24(2006.01)i, B60R 19/02(2006.01)i

Applicant

NETSHAPE ENERGY MANAGEMENT, LLC et al

1. This opinion contains indications relating to the following items:

- [x] Box No. I Basis of the opinion
- [ ] Box No. II Priority
- [ ] Box No. III Non-establishment of opinion with regard to novelty, inventive step and industrial applicability
- [ ] Box No. IV Lack of unity of invention
- [x] Box No. V Reasoned statement under Rule 43bis.1(a)(i) with regard to novelty, inventive step or industrial applicability; citations and explanations supporting such statement
- [ ] Box No. VI Certain documents cited
- [ ] Box No. VII Certain defects in the international application
- [ ] Box No. VIII Certain observations on the international application

2. **FURTHER ACTION**
If a demand for international preliminary examination is made, this opinion will be considered to be a written opinion of the International Preliminary Examining Authority ("IPEA") except that this does not apply where the applicant chooses an Authority other than this one to be the IPEA and the chosen IPEA has notified the International Bureau under Rule 66.1bis(b) that written opinions of this International Searching Authority will not be so considered.

If this opinion is, as provided above, considered to be a written opinion of the IPEA, the applicant is invited to submit to the IPEA a written reply together, where appropriate, with amendments, before the expiration of 3 months from the date of mailing of Form PCT/ISA/220 or before the expiration of 22 months from the priority date, whichever expires later.
For further options, see Form PCT/ISA/220.

3. For further details, see notes to Form PCT/ISA/220.

Name and mailing address of the ISA/KR	Date of completion of this opinion	Authorized officer
Korean Intellectual Property Office Government Complex-Daejeon, 139 Seonsa-ro, Seo-gu, Daejeon 302-701, Republic of Korea Facsimile No. 82-42-472-7140	25 MAY 2010 (25.05.2010)	Lee,Sang Ho Telephone No.82-42-481-8423

WRITTEN OPINION OF THE INTERNATIONAL SEARCHING AUTHORITY

International application No.

PCT/US2009/062539

Box No. I Basis of this opinion

1. With regard to the **language**, this opinion has been established on the basis of :

   ☒ the international application in the language in which it was filed

   ☐ a translation of the international application into _____ , which is the language of a translation furnished for the purposes of international search (Rules 12.3(a) and 23.1(b))

2. ☐ This opinion has been established taking into account the **rectification of an obvious mistake** authorized by or notified to this Authority under Rule 91 (Rule 43*bis*.1(a))

3. With regard to any **nucleotide and/or amino acid sequence** disclosed in the international application, this opinion has been established on the basis of:

   a. a sequence listing filed or furnished
   - ☐ on paper
   - ☐ in electronic form

   b. time of filing or furnishing
   - ☐ contained in the international application as filed.
   - ☐ filed together with the international application in electronic form.
   - ☐ furnished subsequently to this Authority for the purposes of search.

4. ☐ In addition, in the case that more than one version or copy of a sequence listing has been filed or furnished, the required statements that the information in the subsequent or additioanl copies is identical to that in the application as filed or does not go beyond the application as filed, as appropriate, were furnished.

5. Additional comments:

WRITTEN OPINION OF THE INTERNATIONAL SEARCHING AUTHORITY

International application No.
PCT/US2009/062539

Box No. V Reasoned statement under Rule 43bis.1(a)(i) with regard to novelty, inventive step or industrial applicability; citations and explanations supporting such statement

1. Statement

Novelty (N)	Claims	1-19	YES
	Claims	NONE	NO
Inventive step (IS)	Claims	1-16	YES
	Claims	17-19	NO
Industrial applicability (IA)	Claims	1-19	YES
	Claims	NONE	NO

2. Citations and explanations :

Reference is made to the following documents:

D1: US 2008-0203740 A1 (MELLIS JEFFERY JAY et al.) 28 August 2008
D2: KR 10-1997-0039259 A (DAEWOO MOTOR COMPANY) 24 July 1997
D3: US 2003-0020291 A1 (THIERRY ROUSSEL et al.) 30 January 2003

1. Novelty and Inventive Step

1.1 claims 1-9

The subject matter of claim 1 differs from the disclosure of D1 in that a cross beam with an S-shaped cross section of claim 1 is not disclosed by D1. As the subject matter of claim 1 is not shown in any other prior art documents cited in the ISR, claim 1 is not anticipated by any of the prior art documents including D1, nor obvious to the person skilled in the art.
Therefore, claim 1 is novel and involves an inventive step under PCT Article 33(2) and (3).

Claims 2-9 which are dependent on claim 1 also meet the requirements of PCT Article 33(2)-(3) with respect to novelty and inventive step.

1.2 claims 10

The subject matter of claim 10 differs from the disclosure of D1 in that one of the primary and secondary beams with an S-shaped cross section of claim 10 is not disclosed by D1. As the subject matter of claim 10 is not shown in any other prior art documents cited in the ISR, claim 10 is not anticipated by any of the prior art documents including D1, nor obvious to the person skilled in the art.
Therefore, claim 10 is novel and involves an inventive step under PCT Article 33(2) and (3).

1.3 claims 11-15

The subject matter of claim 11 differs from the disclosure of D1 in that a plastic beam of claim 11 has a cross section defining at least two oppositely-facing concavities. As the subject matter of claim 11 is not shown in any other prior art documents cited in the ISR, claim 11 is not anticipated by any of the prior art documents including D1, nor obvious to the person skilled in the art.
Therefore, claim 11 is novel and involves an inventive step under PCT Article 33(2) and (3).

Claims 12-15 which are dependent on claim 11 also meet the requirements of PCT Article 33(2)-(3) with respect to novelty and inventive step.

(Continued on the Supplemental Box.)

Supplemental Box

In case **the space in any of the preceding boxes is not sufficient.**
Continuation of :

Box V.

1.4 claims 16

The subject matter of claim 16 differs from the disclosure of D1 in that a structural plastic cross beam with one of end portions and center portion of claim 16 includes sets of stiffening ribs with one of the sets defining a triangular shape in a concavity of the beam. As the subject matter of claim 16 is not shown in any other prior art documents cited in the ISR, claim 16 is not anticipated by any of the prior art documents including D1, nor obvious to the person skilled in the art.
Therefore, claim 16 is novel and involves an inventive step under PCT Article 33(2) and (3).

1.5 claims 17-19

D1, which is considered to be the closest prior art to the subject matter of claim 17, discloses a bumper beam comprising end portions with openings bolted or welded to the frame assembly of the vehicle and an intermediate portion.
The subject matter of claim 17 differs from the disclosure of D1 in that the attachment structure of claim 17 includes one quick-attach connector for connecting to the vehicle frame without requiring a separate fastener for assembly. However, the said feature of claim 17 can readily by obtained by a slight constructional change from end portions with openings of D1. Accordingly, claim 17 would have been obvious over D1.
Therefore, claim 17 is novel under PCT Article 33(2), but does not involve an inventive step under PCT Article 33(3).

The additional features of claims 18-19, dependent on claim 17, are described in D1(See Figs. 1-7) or generally known to a person skilled in the art. Accordingly, claims 18-19 would have been obvious over D1. Therefore, claims 18-19 are novel under PCT Article 33(2), but do not involve an inventive step under PCT Article 33(3).

2. Industrial Applicability
Claims 1-19 have industrial applicability (PCT Article 33(4)).

The embodiments of the invention in which an exclusive property or privilege is claimed are defined as follows:

1. A bumper system for providing impact resistance on a vehicle frame, comprising:

a structural beam with end-positioned mounts configured for attachment to the vehicle frame, the cross beam having an S-shaped cross section and having a length that extends about equal to a width of a vehicle.

2. The bumper system defined in claim 1, wherein the beam includes polymeric material.

3. The bumper system defined in claim 1, wherein the beam comprises a primary reinforcement beam on a front of a vehicle.

4. The bumper system defined in claim 1, including a primary beam, and wherein the structural beam comprises a secondary beam positioned under the primary beam.

5. The bumper system defined in claim 1, including crush cans engaging and supporting the mounts.

6. The bumper system defined in claim 1, wherein the beam defines at least one forwardly-facing concavity that, when the beam is in a vehicle-mounted position, is at a top of the cross section.

7. The bumper system defined in claim 1, wherein the beam has transverse stiffening ribs extending across both concavities defined by the cross section.

8. The bumper system defined in claim 7, wherein the stiffening ribs include vertical and diagonal ribs.

9. The bumper system defined in claim 1, wherein the crush cans are integrally formed on ends of the beam and form a part of the mounting structure.

10. A bumper apparatus comprising:

a primary reinforcement beam designed for major impact collisions against a relatively heavy or stationary object; and

a secondary beam designed for pedestrian impact and positioned below the primary reinforcement beam in a position to act as a 'leg catcher' for improved pedestrian safety;

at least one of the primary and secondary beams having an S-shaped cross section and a cross-car width generally matching a vehicle width.

11. A beam apparatus for improved safety, comprising

a plastic beam having a cross section defining at least two oppositely-facing concavities; and

a pair of separate crush cans supporting ends of the beam and adapted for mounting to a vehicle frame in a position for improved impact safety.

12. The beam apparatus defined in claim 11, wherein the crush cans are made of metal.

13. The beam apparatus defined in claim 11, wherein the crush cans each include plastic material.

14. The beam apparatus defined in claim 11, wherein the cross section of the beam defines an S-shaped section.

15. The beam apparatus defined in claim 14, wherein the S-shaped section defines a forwardly facing top concavity.

16. In a vehicle having a vehicle frame and a bumper system for impact against an object, an improvement comprising:

the bumper system including a structural plastic cross beam having a center portion with a length that extends about equal to a width of the vehicle frame and having end portions with attachment structure for securing the cross beam to the vehicle frame, at least one of the end portions and center portion including sets of stiffening ribs, with at least one of the sets defining a triangular shape in a concavity of the beam for distributing stress.

UNITED STATES PATENT AND TRADEMARK OFFICE

UNITED STATES DEPARTMENT OF COMMERCE
United States Patent and Trademark Office
Address: COMMISSIONER FOR PATENTS
P.O. Box 1450
Alexandria, Virginia 22313-1450
www.uspto.gov

APPLICATION NO.	FILING DATE	FIRST NAMED INVENTOR	ATTORNEY DOCKET NO.	CONFIRMATION NO.
12/607,523	10/28/2009	Shailesh K. Agrahari	SHA001 P462	4709

277 7590 11/15/2010
PRICE HENEVELD COOPER DEWITT & LITTON, LLP
695 KENMOOR, S.E.
P O BOX 2567
GRAND RAPIDS, MI 49501

EXAMINER
PAPE, JOSEPH

ART UNIT	PAPER NUMBER
3612	

MAIL DATE	DELIVERY MODE
11/15/2010	PAPER

Please find below and/or attached an Office communication concerning this application or proceeding.

The time period for reply, if any, is set in the attached communication.

UNITED STATES PATENT AND TRADEMARK OFFICE

Commissioner for Patents
United States Patent and Trademark Office
P.O. Box 1450
Alexandria, VA 22313-1450
www.uspto.gov

NOV 15 2010

PRICE HENEVELD COOPER DEWITT & LITTON, LLP
695 KENMOOR, S.E.
P O BOX 2567
GRAND RAPIDS MI 49501

In re application of Agrahari et al. Application No. 12/607,523 Filed: October 28, 2009 For: BUMPER BEAM MULTI-CONCAVITY DEFINING CROSS SECTION	**DECISION ON REQUEST TO PARTICIPATE IN PATENT PROSECUTION HIGHWAY PROGRAM AND PETITION TO MAKE SPECIAL UNDER 37 CFR 1.102(d)**

This is a decision on the renewed request to participate in the Patent Prosecution Highway (PPH) program and the petition under 37 CFR 1.102(d), filed October 8, 2010, to make the above-identified application special.

The request and petition are **GRANTED**.

A grantable request to participate in the PPH program and petition to make special require:

(1) The U.S. application must disclose an eligible relationship to one or more PCT applications filed in the KIPO, EPO or USPTO;
(2) Applicant must submit a copy of the allowable/patentable claim(s) from the PCT application(s) latest international work product (the written opinion or the IPER) along with an English translation thereof and a statement that the English translation is accurate;
(3) All the claims in the U.S. application must sufficiently correspond or be amended to sufficiently correspond to the allowable/patentable claim(s) in the PCT application(s);
(4) Examination of the U.S. application has not begun;
(5) Applicant must submit a copy of the latest international work product from the PCT application containing the allowable/patentable claim(s) along with an English translation thereof and a statement that the English translation is accurate;
(6) Applicant must submit an IDS listing the documents cited by the PCT examiner in the international work product along with copies of documents except U.S. patents or U.S. patent application publications.

In light of the petition being properly submitted via EFS-Web as is required, and the preliminary amendment of October 8, 2010, the request to participate in the PPH program complies with the above requirements, the above-identified application has been accorded "special" status.

All other inquiries concerning the examination or status of the application should be directed to the Patent Application Information Retrieval (PAIR) system.

The application is being forwarded to the examiner for action on the merits commensurate with this decision as soon as any pre-exam processing has been completed.

Any inquiry regarding this decision should be directed to Mikado Buiz, Quality Assurance Specialist, at (571) 272-6578.

/ Mikado Buiz /

Mikado Buiz,
Quality Assurance Specialist
Technology Center 3600

MB/MB: 11/12/10

UNITED STATES PATENT AND TRADEMARK OFFICE

UNITED STATES DEPARTMENT OF COMMERCE
United States Patent and Trademark Office
Address: COMMISSIONER FOR PATENTS
P.O. Box 1450
Alexandria, Virginia 22313-1450
www.uspto.gov

APPLICATION NO.	FILING DATE	FIRST NAMED INVENTOR	ATTORNEY DOCKET NO.	CONFIRMATION NO.
12/607,535	10/28/2009	Jeffrey H. Maxwell	12524.37.6.1	4730

22859 7590 10/01/2010
INTELLECTUAL PROPERTY GROUP
FREDRIKSON & BYRON, P.A.
200 SOUTH SIXTH STREET, SUITE 4000
MINNEAPOLIS, MN 55402

EXAMINER

ART UNIT	PAPER NUMBER
3744	

MAIL DATE	DELIVERY MODE
10/01/2010	PAPER

Please find below and/or attached an Office communication concerning this application or proceeding.

The time period for reply, if any, is set in the attached communication.

UNITED STATES PATENT AND TRADEMARK OFFICE

Commissioner for Patents
United States Patent and Trademark Office
P.O. Box 1450
Alexandria, VA 22313-1450
www.uspto.gov

INTELLECTUAL PROPERTY GROUP
FREDRIKSON & BYRON, P.A.
200 SOUTH SIXTH STREET, SUITE 4000
MINNEAPOLIS MN 55402

In re Application of	:	
MAXWELL, JEFFREY H.	:	DECISION ON PETITION
Application No. 12/607,535	:	TO MAKE SPECIAL UNDER
Filed: Oct. 28, 2009	:	THE GREEN TECHNOLOGY
Attorney Docket No. 12524.37.6.1	:	PILOT PROGRAM
Title of Invention: HIGH-EFFICIENCY HEAT PUMPS		

This is a decision on the petition under 37 CFR 1.102, filed Dec. 31, 2009, to make the above-identified application special under the pilot program for applications pertaining to Green Technologies as set forth in 74 Federal Register Notice 64666 (December 8, 2009) and amended by 75 Federal Register Notice 28554 (May 21, 2010).

The petition is **DISMISSED**.

If reconsideration of this decision is desired, a petition for reconsideration must be filed within ONE (1) MONTH OR THIRTY (30) DAYS from the mail date of this decision, whichever is longer. No extension of this time limit can be granted under 37 CFR 1.136(a) or (b). The petition for reconsideration should include an exhaustive attempt to provide the lacking item(s) noted below, since, after a decision on the petition for reconsideration, no further reconsideration or review of the matter will be undertaken by the Director.

A grantable petition to make an application special under 37 CFR 1.102 and the pilot program as set forth in 74 FR 64666 must be directed to a nonprovisional application filed under 35 USC 111(a) or be a national stage entry under 35 USC 371, exclusive of any reissue applications and be filed prior to the date of the notice, December 8, 2009.

In order to qualify for special status, the following requirements must be met. 1) The application must have no more than 3 independent claims and no more than 20 total claims. 2) The application must not contain any multiple dependent claims. 3) The petition must state the basis for seeking special status, i.e., the claimed invention either: A) materially enhances the quality of the environment or B) materially contributes to: i) the discovery or development of renewable

energy resources, ii) the more efficient utilization and conservation of energy resources, or iii) greenhouse gas emission reduction. 4) If the disclosure is not clear on its face that the claimed invention materially contributes under category (A) or (B), the petition must be accompanied by a statement by the applicant, assignee, or an attorney/agent registered to practice before the Office explaining how the materiality standard is met. 5) A statement that applicant will agree to make an election without traverse in a telephonic interview if a restriction requirement is made by the examiner. 6) The petition to make special must be filed electronically. 7) The petition must be filed at least one day prior to the date that a first Office Action appears in the Patent Application Information Retrieval (PAIR) system. 8) The petition must be accompanied by a request for early publication in compliance with 37 CFR 1.219 and include the publication fee as set forth in 37 CFR 1.18(d).

The requirement for a fee for consideration of the petition to make special for applications pertaining to Green Technologies has been waived.

The petition lacks items # 4 and 5.

In regard to item 4, petitioner should note that the instant petition includes a statement identifying the basis for the special status (i.e., whether the instant invention (1) materially enhances the quality of the environment or materially contributes to (2) development of renewable energy resources or energy conservation, or (3) greenhouse gas reduction) as required by sections II and III of the notice. However, as stated in the notice, applicant must also provide a statement pertaining to the materiality standard if the application disclosure is not clear on its face as to the materiality of the basis for the special status of the invention. This petition lacks such a statement and it is not agreed that the application on its face meets that materiality standard. For example, it is not clear how the claimed two heat pumps in series would contribute to more efficient utilization and conservation of energy resources and reduce the quantity of energy required for heating/cooling.

In regard to item 5, petitioner should note that a statement has not been provided that states that applicant will agree to make an election without traverse in a telephonic interview if a restriction requirement is made by the examiner as required by the Notice. Accordingly, the petition cannot be granted without such a statement.

Any reconsideration of this decision should be submitted through the USPTO electronic filing system, EFS-Web, and selecting the document description of "Petition for Green Tech Pilot" on the EFS-Web screen.

Currently this application is undergoing pre-examination processing. Once completed, the application will be forwarded to the Technology Center Art Unit 3744 for action in its regular turn. Telephone inquiries concerning this decision should be directed to Henry C. Yuen at 571-272-4856.

/Henry C. Yuen/

Henry C. Yuen
Quality Assurance Specialist
Technology Center 3700

Doc Code: PET.GREEN
Document Description: Petition for Green Tech Pilot

PTO/SB/420 (03-11)

PETITION TO MAKE SPECIAL UNDER THE GREEN TECHNOLOGY PILOT PROGRAM

Attorney Docket Number: 12524.37.6.1	Application Number (if known): 12/607,535	Filing date: 10-28-2009

First Named Inventor: Jeffrey H. Maxwell

Title: High-Efficiency Heat Pumps

APPLICANT HEREBY REQUESTS TO PARTICIPATE IN THE GREEN TECHNOLOGY PILOT PROGRAM FOR THE ABOVE-IDENTIFIED APPLICATION. See Instruction Sheet on page 2.

This petition must be timely filed electronically using the USPTO electronic filing system, EFS-Web.

1. By filing this petition:

   Applicant is requesting early publication: Applicant hereby requests early publication under 37 CFR 1.219 and the publication fee set forth in 37 CFR 1.18(d) accompanies this request.

2. By filing this petition: applicant is agreeing to make an election without traverse in a telephonic interview and elect an invention that meets the eligibility requirements for the Green Technology Pilot Program, if the Office determines that the claims are not obviously directed to a single invention. See Instruction Sheet.

3. This request is accompanied by statements of special status for the eligibility requirement.

4. The application contains no more than three (3) independent claims and twenty (20) total claims.

5. The application does not contain any multiple dependent claims.

6. Other attachments: _____

Signature /Thomas R. Hipkins/	Date May 10, 2011
Name (Print/Typed) Thomas R. Hipkins	Registration Number 57659

Note: *Signatures of all the inventors or assignees of record of the entire interest or their representative(s) are required in accordance with 37 CFR 1.33 and 11.18. Please see 37 CFR 1.4(d) for the form of the signature. If necessary, submit multiple forms for more than one signature, see below*.*

☐ *Total of _____ forms are submitted.

If you need assistance in completing the form, call 1-800-PTO-9199 and select option 2.

Instruction Sheet for
Petition to Make Special Under the Green Technology Pilot Program

(Not to be Submitted to the USPTO)

The following is a summary of the requirements (for more information see the notices (i) "Pilot Program for Green Technologies Including Greenhouse Gas Reduction," (ii) "Elimination of Classification Requirement in the Green Technology Pilot Program," and (iii) "Expansion and Extension of the Green Technology Pilot Program," available on the USPTO web site at http://www.uspto.gov/patents/init_events/green_tech.jsp):

(1) The application must be a non-reissue, non-provisional utility application filed under 35 U.S.C. 111(a), or an international application that has entered the national stage in compliance with 35 U.S.C. 371, irrespective of the filing date of the application. Reexamination proceedings are excluded from this pilot program.

(2) The application must contain three or fewer independent claims and twenty or fewer total claims. The application must not contain any multiple dependent claims. For an application that contains more than three independent claims or twenty total claims, or multiple dependent claims, applicant must file a preliminary amendment in compliance with 37 CFR 1.121 to cancel the excess claims and/or the multiple dependent claims at the time the petition to make special is filed.

(3) The claims must be directed to a single invention that materially enhances the quality of the environment, or that materially contributes to: (1) the discovery or development of renewable energy resources; (2) the more efficient utilization and conservation of energy resources; or (3) green house gas emission reduction (see the eligibility requirements of sections II and III of the notice (i) cited above). The petition must include a statement that, if the USPTO determines that the claims are directed to multiple inventions (e.g., in a restriction requirement), applicant will agree to make an election without traverse in a telephonic interview, and elect an invention that meets the eligibility requirements in section II or III of the notice (i) cited above.

(4) The petition to make special must be timely filed electronically using the USPTO electronic filing system, EFS-Web, and selecting the document description of "Petition for Green Tech Pilot" on the EFS-Web screen. Applicant should use form PTO/SB/420, which is available as a Portable Document Format (PDF) fillable form in EFS-Web and on the USPTO Web site.

(5) The petition to make special must be filed at least one day prior to the date that a first Office action (which may be an Office action containing only a restriction requirement) appears in the Patent Application Information Retrieval (PAIR) system. Applicant may check the status of the application using PAIR.

(6) The petition to make special must be accompanied by a request for early publication in compliance with 37 CFR 1.219 and the publication fee set forth in 37 CFR 1.18(d).

Privacy Act Statement

The **Privacy Act of 1974 (P.L. 93-579)** requires that you be given certain information in connection with your submission of the attached form related to a patent application or patent. Accordingly, pursuant to the requirements of the Act, please be advised that: (1) the general authority for the collection of this information is 35 U.S.C. 2(b)(2); (2) furnishing of the information solicited is voluntary; and (3) the principal purpose for which the information is used by the U.S. Patent and Trademark Office is to process and/or examine your submission related to a patent application or patent. If you do not furnish the requested information, the U.S. Patent and Trademark Office may not be able to process and/or examine your submission, which may result in termination of proceedings or abandonment of the application or expiration of the patent.

The information provided by you in this form will be subject to the following routine uses:

1. The information on this form will be treated confidentially to the extent allowed under the Freedom of Information Act (5 U.S.C. 552) and the Privacy Act (5 U.S.C 552a). Records from this system of records may be disclosed to the Department of Justice to determine whether disclosure of these records is required by the Freedom of Information Act.
2. A record from this system of records may be disclosed, as a routine use, in the course of presenting evidence to a court, magistrate, or administrative tribunal, including disclosures to opposing counsel in the course of settlement negotiations.
3. A record in this system of records may be disclosed, as a routine use, to a Member of Congress submitting a request involving an individual, to whom the record pertains, when the individual has requested assistance from the Member with respect to the subject matter of the record.
4. A record in this system of records may be disclosed, as a routine use, to a contractor of the Agency having need for the information in order to perform a contract. Recipients of information shall be required to comply with the requirements of the Privacy Act of 1974, as amended, pursuant to 5 U.S.C. 552a(m).
5. A record related to an International Application filed under the Patent Cooperation Treaty in this system of records may be disclosed, as a routine use, to the International Bureau of the World Intellectual Property Organization, pursuant to the Patent Cooperation Treaty.
6. A record in this system of records may be disclosed, as a routine use, to another federal agency for purposes of National Security review (35 U.S.C. 181) and for review pursuant to the Atomic Energy Act (42 U.S.C. 218(c)).
7. A record from this system of records may be disclosed, as a routine use, to the Administrator, General Services, or his/her designee, during an inspection of records conducted by GSA as part of that agency's responsibility to recommend improvements in records management practices and programs, under authority of 44 U.S.C. 2904 and 2906. Such disclosure shall be made in accordance with the GSA regulations governing inspection of records for this purpose, and any other relevant (*i.e.*, GSA or Commerce) directive. Such disclosure shall not be used to make determinations about individuals.
8. A record from this system of records may be disclosed, as a routine use, to the public after either publication of the application pursuant to 35 U.S.C. 122(b) or issuance of a patent pursuant to 35 U.S.C. 151. Further, a record may be disclosed, subject to the limitations of 37 CFR 1.14, as a routine use, to the public if the record was filed in an application which became abandoned or in which the proceedings were terminated and which application is referenced by either a published application, an application open to public inspection or an issued patent.
9. A record from this system of records may be disclosed, as a routine use, to a Federal, State, or local law enforcement agency, if the USPTO becomes aware of a violation or potential violation of law or regulation.

UNITED STATES PATENT AND TRADEMARK OFFICE

UNITED STATES DEPARTMENT OF COMMERCE
United States Patent and Trademark Office
Address: COMMISSIONER FOR PATENTS
P.O. Box 1450
Alexandria, Virginia 22313-1450
www.uspto.gov

APPLICATION NO.	FILING DATE	FIRST NAMED INVENTOR	ATTORNEY DOCKET NO.	CONFIRMATION NO.
12/607,535	10/28/2009	Jeffrey H. Maxwell	12524.37.6.1	4730

22859 7590 06/15/2011
FREDRIKSON & BYRON, P.A.
INTELLECTUAL PROPERTY GROUP
200 SOUTH SIXTH STREET, SUITE 4000
MINNEAPOLIS, MN 55402

EXAMINER
TYLER, CHERYL JACKSON

ART UNIT	PAPER NUMBER
3744	

NOTIFICATION DATE	DELIVERY MODE
06/15/2011	ELECTRONIC

Please find below and/or attached an Office communication concerning this application or proceeding.

The time period for reply, if any, is set in the attached communication.

Notice of the Office communication was sent electronically on above-indicated "Notification Date" to the following e-mail address(es):

IP@FREDLAW.COM

UNITED STATES PATENT AND TRADEMARK OFFICE

Commissioner for Patents
United States Patent and Trademark Office
P.O. Box 1450
Alexandria, VA 22313-1450
www.uspto.gov

FREDRIKSON & BYRON, P.A.
INTELLECTUAL PROPERTY GROUP
200 SOUTH SIXTH STREET, SUITE 4000
MINNEAPOLIS MN 55402

In re Application of	:	
MAXWELL, JEFFREY H.	:	DECISION ON PETITION
Application No. 12/607535	:	TO MAKE SPECIAL UNDER
Filed: October 28, 2009	:	THE GREEN TECHNOLOGY
Attorney Docket No. 12524.37.6.1	:	PILOT PROGRAM

This is a decision on the renewed petition under 37 CFR 1.102, filed May 10, 2011, to make the above-identified application special under the pilot program for applications pertaining to Green Technologies as set forth in 74 Federal Register Notice 64666 (December 8, 2009) and amended by 75 Federal Register Notice 28554 (May 21, 2010) and 75 Federal Register Notice 69049 (November 10, 2010).

The petition is **denied as untimely**.

A grantable petition to make an application special under 37 CFR 1.102 and the pilot program as set forth in 74 FR 64666 must be directed to a nonprovisional application filed under 35 USC 111(a) or be a national stage entry under 35 USC 371, exclusive of any reissue applications.

If reconsideration of this decision is desired, a petition for reconsideration must be filed within ONE (1) MONTH OR THIRTY (30) DAYS from the mail date of this decision, whichever is longer. No extension of this time limit can be granted under 37 CFR 1.136(a) or (b). The petition for reconsideration should include an exhaustive attempt to provide the lacking item(s) noted below, since, after a decision on the petition for reconsideration, no further reconsideration or review of the matter will be undertaken by the Director.

In order to qualify for special status, the following requirements must be met. 1) The application must have no more than 3 independent claims and no more than 20 total claims. 2) The application must not contain any multiple dependent claims. 3) The petition must state the basis for seeking special status, i.e., the claimed invention either: A) materially enhances the quality of the environment or B) materially contributes to: i) the discovery or development of renewable

energy resources, ii) the more efficient utilization and conservation of energy resources, or iii) greenhouse gas emission reduction. 4) If the disclosure is not clear on its face that the claimed invention materially contributes under category (A) or (B), the petition must be accompanied by a statement by the applicant, assignee, or an attorney/agent registered to practice before the Office explaining how the materiality standard is met. 5) A statement that applicant will agree to make an election without traverse in a telephonic interview if a restriction requirement is made by the examiner. 6) The petition to make special must be filed electronically. 7) The petition must be filed at least one day prior to the date that a first Office Action appears in the Patent Application Information Retrieval (PAIR) system. 8) The petition must be accompanied by a request for early publication in compliance with 37 CFR 1.219 and include the publication fee as set forth in 37 CFR 1.18(d).

A review of the record shows that the instant renewed petition was filed more than thirty days from the previous dismissal decision. As the petition was not timely filed, the requested special status will not be granted.

Under the circumstances, the request to make the above-identified application special under the pilot program for applications pertaining to Green Technologies cannot be granted.

Telephone inquiries concerning this decision should be directed to Henry C. Yuen at 571-272-4856. The application is being forwarded to the Technology Center Art Unit 3744 for action in its regular turn.

Since this is a decision for reconsideration, no further reconsideration or review of the matter will be undertaken by the Director.

/Henry C. Yuen/

Henry C. Yuen
Quality Assurance Specialist
Technology Center TC 3700

UNITED STATES PATENT AND TRADEMARK OFFICE

Commissioner for Patents
United States Patent and Trademark Office
P.O. Box 1450
Alexandria, VA 22313-1450
www.uspto.gov

ALSTON & BIRD LLP
BANK OF AMERICA PLAZA
101 SOUTH TRYON STREET, SUITE 4000
CHARLOTTE, NC 28280-4000

MAILED

SEP 24 2010

OFFICE OF PETITIONS

In re Application of Addington et al. Application No. 12/607,621 Filed: October 28, 2009 Attorney Docket No. 043314/381102	: : : : :	DECISION ON PETITION TO WITHDRAW FROM RECORD

This is a decision on the Request to Withdraw as attorney or agent of record under 37 C.F.R. § 1.36(b), filed on August 3, 2010.

The request is **NOT APPROVED**.

The Office will only accept correspondence address changes to the most current address information provided for the assignee of the entire interest *who properly became of record under 37 CFR 3.71,* or, if no assignee of the entire interest has properly been made of record, the most current address information provided for the first named inventor. 37 CFR 3.71(c) states:

> *An assignee becomes of record either in a national patent application or a reexamination proceeding by filing a statement in compliance with § 3.73(b) that is signed by a party who is authorized to act on behalf of the assignee.*

As there is no Statement under 37 CFR 3.73(b) in the instant application, the request cannot be granted. All future communications from the Office will be directed to above-listed address until otherwise properly notified by the applicant or a proper change of correspondence address have been submitted.

There are no outstanding Office actions that require a reply from the applicant.

Telephone inquires concerning this decision should be directed to the undersigned at (571) 272-6059. All other inquires concerning either the examination or status of the application should be directed to the Technology Center.

A. Kelley

Alicia Kelley
Petitions Examiner
Office of Petitions

UNITED STATES PATENT AND TRADEMARK OFFICE

Commissioner for Patents
United States Patent and Trademark Office
P.O. Box 1450
Alexandria, VA 22313-1450
www.uspto.gov

JOHN S. PRATT, ESQ
KILPATRICK TOWNSEND & STOCKTON LLP
1100 PEACHTREE STREET
SUITE 2800
ATLANTA GA 30309

MAILED
MAR 06 2012
OFFICE OF PETITIONS

In re Application of	:	
Michel Caillibotte, et al.	:	
Application No. 12/607,678	:	DECISION GRANTING PETITION
Filed: October 28, 2009	:	UNDER 37 CFR 1.313(c)(2)
Attorney Docket No. A0224/409675	:	

This is a decision on the petition under 37 CFR 1.313(c)(2), filed, March 2, 2012 to withdraw the above-identified application from issue after payment of the issue fee.

The petition is **GRANTED**.

The above-identified application is withdrawn from issue for consideration of a submission under 37 CFR 1.114 (request for continued examination). *See* 37 CFR 1.313(c)(2).

Petitioner is advised that the issue fee paid on February 21, 2012 cannot be refunded. If, however, this application is again allowed, petitioner may request that it be applied towards the issue fee required by the new Notice of Allowance.[1]

Telephone inquiries should be directed to Terri Johnson at (571) 272-2991.

This application is being referred to Technology Center AU 3765 for processing of the request for continued examination under 37 CFR 1.114 and for consideration of the concurrently filed information disclosure statement.

/Terri Johnson/
Terri Johnson
Petitions Examiner
Office of Petitions

---

[1] *The request to apply the issue fee to the new Notice may be satisfied by completing and returning the new Part B – Fee(s) Transmittal Form (along with any balance due at the time of submission). Petitioner is advised that the Issue Fee Transmittal Form must be completed and timely submitted to avoid abandonment of the application.*

Doc Code: PET.GREEN
Document Description: Petition for Green Tech Pilot

PTO/SB/420 (03-11)

PETITION TO MAKE SPECIAL UNDER THE GREEN TECHNOLOGY PILOT PROGRAM

Attorney Docket Number: 12524.37.6.4	Application Number (if known): 12/607,679	Filing date: 10-28-2009

First Named Inventor: Methods and Equipment for Heating and Cooling Building Zones

Title: Jeffrey H. Maxwell

APPLICANT HEREBY REQUESTS TO PARTICIPATE IN THE GREEN TECHNOLOGY PILOT PROGRAM FOR THE ABOVE-IDENTIFIED APPLICATION. See Instruction Sheet on page 2.

This petition must be timely filed electronically using the USPTO electronic filing system, EFS-Web.

1. By filing this petition:

   Applicant is requesting early publication: Applicant hereby requests early publication under 37 CFR 1.219 and the publication fee set forth in 37 CFR 1.18(d) accompanies this request.

2. By filing this petition: applicant is agreeing to make an election without traverse in a telephonic interview and elect an invention that meets the eligibility requirements for the Green Technology Pilot Program, if the Office determines that the claims are not obviously directed to a single invention. See Instruction Sheet.

3. This request is accompanied by statements of special status for the eligibility requirement.

4. The application contains no more than three (3) independent claims and twenty (20) total claims.

5. The application does not contain any multiple dependent claims.

6. Other attachments: _____

Signature /Thomas R. Hipkins/	Date May 11, 2011
Name (Print/Typed) Thomas R. Hipkins	Registration Number 57659

Note: *Signatures of all the inventors or assignees of record of the entire interest or their representative(s) are required in accordance with 37 CFR 1.33 and 11.18. Please see 37 CFR 1.4(d) for the form of the signature. If necessary, submit multiple forms for more than one signature, see below*.*

☐ *Total of..... forms are submitted.

If you need assistance in completing the form, call 1-800-PTO-9199 and select option 2.

22859
Customer Number

Patent Case No.: 12524.37.6.4

IN THE UNITED STATES PATENT AND TRADEMARK OFFICE

First Named Inventor:	JEFFREY H. MAXWELL		
Application No.:	12/607,679	Group Art Unit:	3744
Filed:	October 28, 2009	Examiner:	
Title:	METHODS AND EQUIPMENT FOR HEATING AND COOLING BUILDING ZONES		

Office of Petitions
Commissioner for Patents
P.O. Box 1450
Alexandria, VA 22313-1450

STATEMENT OF SPECIAL STATUS

This Statement of Special Status is being filed concurrently with a Petition to Make Special Under the Green Technology Pilot Program for the above-identified application.

Application Type. The present application is a non-reissue, non-provisional utility application filed under 35 U.S.C. 111(a).

Claims. The present application, as amended by the Preliminary Amendment filed on December 31, 2009, has three independent claims, 20 total claims, and no multiple dependent claims.

Basis for Special Status. The claims pending in the present application are directed to a single invention that materially contributes to the more efficient utilization and conservation of energy resources. Applicant respectfully submits that it is clear on the face of the present application that the invention materially contributes to the more

efficient utilization and conservation of energy resources. The industrial HVAC equipment disclosed in this application provides high levels of energy efficiency.

To the extent that this application's disclosure is not clear on its face that the claimed invention materially contributes to the more efficient utilization and conservation of energy resources, this paragraph explains how the materiality standard is met. For example, each of the independent claims recite a "modular distribution box" with a "controller configured to control the supply path valve and the return path valve." Paragraph 109 of the present application states,

> "In some instances, the controller 532 can (digitally) instruct the blower of the fan coil to various pre-wired stages of speed *or it can instruct the blower of the fan coil* ***to any increment of speed*** *on a variable (analogue) signal.*" (emphasis added)

The controller can more closely tailor the energy input of the system to the needs of the conditioned space. The controller can select HVAC fluid flow rates that involve less resistance (e.g., lower speeds), thereby achieving significantly higher ratios of flow rate to input energy as compared with systems that lack flexibility in selecting the flow rate. Accordingly, Applicant respectfully submits that this application meets the materiality standard by virtue of (among other things) the controller's ability to tailor the flow rate of the HVAC fluid to the needs of the conditioned space, thereby significantly reducing waste in energy input.

Additionally, features recited in dependent claims of the present application also materially contribute to the more efficient utilization and conservation of energy resources. For example, claims 10, 16-19, and 23 all refer to "a single fan coil that is uniquely associated with a single building zone." As alluded to in paragraph 123 of the present application, such a configuration is used in place of a system that has two fan coils. A system with one fan coil generally requires much less input energy than a system with two fan coils. Moreover, dependent claim 4 requires the controller to be "connected via a network to one or more components of the HVAC system." Paragraph 111 of the present application states,

> "In many instances, the controller can be connected via a network (e.g., a LAN, a WAN, the Internet, etc.) to other components of the HVAC system. Examples of components to which the controller 532 may be connected include controllers of other distribution boxes, controllers for one or more of the various

> energy transfer components, controllers for one or more heat pump, operator input devices/stations, zone input sensors (e.g., a sensor to indicate whether the zone has transitioned from a closed system to an open system, such as through the opening of a door or window), and other suitable components. In this way, an operator (e.g., a hotel employee at the front desk) can provide instructions to the controller 532, such as whether the zone is occupied, one or more set-point temperatures for the zone, changes to the set-point temperature or limit set points, changes to the actual temperature, whether to cease heating/cooling in the zone, and so on. In this way, the operator can remotely control various HVAC conditions within a given zone with relative ease."

Because operators can control such systems much more precisely, such systems waste a significant amount less input energy and operate more efficiently. In addition, dependent claim 2 requires

> "a pump housed by the modular distribution box, the pump being in fluid communication with the HVAC component supply pipe, wherein the controller is further configured to control the flow rate of the pump."

Paragraph 107 explains,

> "Pump 528 can pump the relevant HVAC fluid through the fan coil supply pipe 510 and into a fan coil. . . . After passing through the fan coil, the HVAC fluid can re-enter the distribution box via the fan coil return pipe 512. A valve 530 can channel the HVAC fluid out of the distribution box 500 via either the hot HVAC fluid outlet pipe 506 or the cold HVAC fluid outlet pipe 508. . . . Hot HVAC fluid from HVAC fluid inlet pipe 502 can return to the hot HVAC fluid at hot HVAC fluid outlet pipe 506. Cold HVAC fluid from cold HVAC fluid pipe 504 can return to the cold HVAC fluid at cold HVAC fluid outlet pipe 508."

In other words, the pump in the distribution box can circulate hot or cold HVAC fluid through the modular distribution box into the relevant zone without the need for the entire system to be running, thereby conserving significant amounts of input energy. For these and other reasons, Applicant respectfully submits that the claims pending in the present application are directed to a single invention that materially contributes to the more efficient utilization and conservation of energy resources.

As set forth above, the technology of the present application materially contributes to the more efficient utilization and conservation of energy resources. In no way can it be stated that the details set forth herein represent merely an attempt to

speculate as to how a hypothetical end-user might specially apply the invention in a manner that could contribute to energy conservation. Nor is this Petition based on only a minor aspect of the claimed invention being directed to energy conservation. Rather, as set forth herein, components and features specifically recited in the claims cause the claimed inventions to utilize energy resources more efficiently and to conserve energy resources.

Election. If the USPTO determines that the claims of this application are directed to multiple inventions (e.g., in a restriction requirement), Applicant hereby agrees to make an election without traverse in a telephonic interview and elect an invention that meets the eligibility requirements in section II or III of the USPTO notice titled "Pilot Program for Green Technologies Including Greenhouse Gas Reduction."

Electronic Filing. This Statement of Special Status and the corresponding Petition to Make Special Under the Green Technology Pilot Program are being timely filed electronically using the USPTO electronic filing system, EFS-Web. The document description used for the Petition to Make Special Under the Green Technology Pilot Program is "Petition for Green Tech Pilot."

Timing. The present Petition to Make Special Under the Green Technology Pilot Program is being filed at least one day prior to the date that a first Office action (including an Office action containing only a restriction requirement) appears in the Patent Application Information Retrieval (PAIR) system. Applicant has checked the status of the application using PAIR.

Publication. The present application was published on May 6, 2010 as U.S. Patent Application Publication No. 2010/0108290. The publication fee for this application was paid on December 31, 2009. Accordingly, Applicant respectfully submits that no additional publication fee is due in connection with the present Petition. That said, the Commissioner is hereby authorized to charge any additional publication fees required to Deposit Account No. 06-1910.

Conclusion. Applicant respectfully submits that the present application meets all of the eligibility requirements for the USPTO's Green Technology Pilot Program and requests that this Petition be granted. The undersigned would welcome a telephone call to discuss any aspect of this Statement of Special Status or the corresponding Petition to Make Special Under the Green Technology Pilot Program.

Respectfully Submitted,

Dated: May 11, 2011

/Thomas R. Hipkins/
Thomas R. Hipkins
Reg. No. 57,659

FREDRIKSON & BYRON, P.A.
200 South Sixth Street, Suite 4000
Minneapolis, MN 55402
(612) 492-7000

4921735

UNITED STATES PATENT AND TRADEMARK OFFICE

UNITED STATES DEPARTMENT OF COMMERCE
United States Patent and Trademark Office
Address: COMMISSIONER FOR PATENTS
P.O. Box 1450
Alexandria, Virginia 22313-1450
www.uspto.gov

APPLICATION NO.	FILING DATE	FIRST NAMED INVENTOR	ATTORNEY DOCKET NO.	CONFIRMATION NO.
12/607,679	10/28/2009	Jeffrey H. Maxwell	12524.37.6.4	4996

22859 7590 06/15/2011
FREDRIKSON & BYRON, P.A.
INTELLECTUAL PROPERTY GROUP
200 SOUTH SIXTH STREET, SUITE 4000
MINNEAPOLIS, MN 55402

EXAMINER
SWANN, JUDY J

ART UNIT	PAPER NUMBER
3785	

NOTIFICATION DATE	DELIVERY MODE
06/15/2011	ELECTRONIC

Please find below and/or attached an Office communication concerning this application or proceeding.

The time period for reply, if any, is set in the attached communication.

Notice of the Office communication was sent electronically on above-indicated "Notification Date" to the following e-mail address(es):

IP@FREDLAW.COM

UNITED STATES PATENT AND TRADEMARK OFFICE

Commissioner for Patents
United States Patent and Trademark Office
P.O. Box 1450
Alexandria, VA 22313-1450
www.uspto.gov

FREDRIKSON & BYRON, P.A.
INTELLECTUAL PROPERTY GROUP
200 SOUTH SIXTH STREET, SUITE 4000
MINNEAPOLIS MN 55402

In re Application of MAXWELL, JEFFREY H. Application No. 12/607679 Filed: October 28, 2009 Attorney Docket No. 12524.37.6.4	: : : : :	DECISION ON PETITION TO MAKE SPECIAL UNDER THE GREEN TECHNOLOGY PILOT PROGRAM

This is a decision on the renewed petition under 37 CFR 1.102, filed May 11, 2011, to make the above-identified application special under the pilot program for applications pertaining to Green Technologies as set forth in 74 Federal Register Notice 64666 (December 8, 2009) and amended by 75 Federal Register Notice 28554 (May 21, 2010) and 75 Federal Register Notice 69049 (November 10, 2010).

The petition is denied as untimely.

A grantable petition to make an application special under 37 CFR 1.102 and the pilot program as set forth in 74 FR 64666 must be directed to a nonprovisional application filed under 35 USC 111(a) or be a national stage entry under 35 USC 371, exclusive of any reissue applications.

If reconsideration of this decision is desired, a petition for reconsideration must be filed within ONE (1) MONTH OR THIRTY (30) DAYS from the mail date of this decision, whichever is longer. No extension of this time limit can be granted under 37 CFR 1.136(a) or (b). The petition for reconsideration should include an exhaustive attempt to provide the lacking item(s) noted below, since, after a decision on the petition for reconsideration, no further reconsideration or review of the matter will be undertaken by the Director.

In order to qualify for special status, the following requirements must be met. 1) The application must have no more than 3 independent claims and no more than 20 total claims. 2) The application must not contain any multiple dependent claims. 3) The petition must state the basis for seeking special status, i.e., the claimed invention either: A) materially enhances the quality of the environment or B) materially contributes to: i) the discovery or development of renewable

energy resources, ii) the more efficient utilization and conservation of energy resources, or iii) greenhouse gas emission reduction. 4) If the disclosure is not clear on its face that the claimed invention materially contributes under category (A) or (B), the petition must be accompanied by a statement by the applicant, assignee, or an attorney/agent registered to practice before the Office explaining how the materiality standard is met. 5) A statement that applicant will agree to make an election without traverse in a telephonic interview if a restriction requirement is made by the examiner. 6) The petition to make special must be filed electronically. 7) The petition must be filed at least one day prior to the date that a first Office Action appears in the Patent Application Information Retrieval (PAIR) system. 8) The petition must be accompanied by a request for early publication in compliance with 37 CFR 1.219 and include the publication fee as set forth in 37 CFR 1.18(d).

A review of the record shows that the instant renewed petition was filed more than thirty days from the previous dismissal decision. As the petition was not timely filed, the requested special status will not be granted.

Under the circumstances, the request to make the above-identified application special under the pilot program for applications pertaining to Green Technologies cannot be granted.

Telephone inquiries concerning this decision should be directed to Henry C. Yuen at 571-272-4856. The application is being forwarded to the Technology Center Art Unit 3785 for action in its regular turn.

Since this is a decision for reconsideration, no further reconsideration or review of the matter will be undertaken by the Director.

/Henry C. Yuen/

Henry C. Yuen
Quality Assurance Specialist
Technology Center TC 3700

UNITED STATES PATENT AND TRADEMARK OFFICE

Commissioner for Patents
United States Patent and Trademark Office
P.O. Box 1450
Alexandria, VA 22313-1450
www.uspto.gov

MAILED

AUG 01 2011

OFFICE OF PETITIONS

FISH & RICHARDSON P.C. (NY)
P.O. BOX 1022
MINNEAPOLIS MN 55440-1022

In re Application of :
Morris C. Rishty :
Application No. 12/607,701 : DECISION ON PETITION
Filed: October 28, 2009 : TO WITHDRAW
Attorney Docket No. 23269-0003001 : FROM RECORD

This is a decision on the Request to Withdraw as attorney or agent of record under 37 C.F.R. § 1.36(b), filed July 6, 2011.

The request is **APPROVED**.

A grantable request to withdraw as attorney/agent of record must be signed by every attorney/agent seeking to withdraw or contain a clear indication that one attorney is signing on behalf of another/others. A request to withdraw will not be approved unless at least 30 (thirty) days would remain between the date of approval and the later of the expiration date of a time to file a response or the expiration date of the maximum time period which can be extended under 37 C.F.R. § 1.136(a).

The request was signed by Sean J. Grygiel, on behalf of all attorneys/agents associated with customer number 26211. All attorneys/agents associated with customer number 26211 have been withdrawn.

The correspondence address has been changed and is copied below.

Telephone inquiries concerning this decision should be directed to Kimberly Inabinet at 571-272-4618.

/Kimberly Inabinet/

Kimberly Inabinet
Petitions Examiner
Office of Petitions

cc: Morris C. Rishty
358 Fifth Avenue, Suite 302
New York, NY 10001

UNITED STATES PATENT AND TRADEMARK OFFICE

UNITED STATES DEPARTMENT OF COMMERCE
United States Patent and Trademark Office
Address: COMMISSIONER FOR PATENTS
P.O. Box 1450
Alexandria, Virginia 22313-1450
www.uspto.gov

APPLICATION NUMBER	FILING OR 371(C) DATE	FIRST NAMED APPLICANT	ATTY. DOCKET NO./TITLE
12/607,701	10/28/2009	Morris C. Rishty	23269-0003001

CONFIRMATION NO. 5038

POWER OF ATTORNEY NOTICE

26211
FISH & RICHARDSON P.C. (NY)
P.O. BOX 1022
MINNEAPOLIS, MN 55440-1022

OC000000049035594

Date Mailed: 07/29/2011

NOTICE REGARDING CHANGE OF POWER OF ATTORNEY

This is in response to the Power of Attorney filed 07/06/2011.

- The withdrawal as attorney in this application has been accepted. Future correspondence will be mailed to the new address of record. 37 CFR 1.33.

/kainabinet/

Office of Data Management, Application Assistance Unit (571) 272-4000, or (571) 272-4200, or 1-888-786-0101

UNITED STATES PATENT AND TRADEMARK OFFICE

UNITED STATES DEPARTMENT OF COMMERCE
United States Patent and Trademark Office
Address: COMMISSIONER FOR PATENTS
P.O. Box 1450
Alexandria, Virginia 22313-1450
www.uspto.gov

APPLICATION NO.	FILING DATE	FIRST NAMED INVENTOR	ATTORNEY DOCKET NO.	CONFIRMATION NO.
12/607,760	10/28/2009	Jeffrey H. Maxwell	12524.37.6.3	5144

22859 7590 01/20/2011
INTELLECTUAL PROPERTY GROUP
FREDRIKSON & BYRON, P.A.
200 SOUTH SIXTH STREET, SUITE 4000
MINNEAPOLIS, MN 55402

EXAMINER

ART UNIT	PAPER NUMBER
3744	

NOTIFICATION DATE	DELIVERY MODE
01/20/2011	ELECTRONIC

Please find below and/or attached an Office communication concerning this application or proceeding.

The time period for reply, if any, is set in the attached communication.

Notice of the Office communication was sent electronically on above-indicated "Notification Date" to the following e-mail address(es):

IP@FREDLAW.COM

UNITED STATES PATENT AND TRADEMARK OFFICE

Commissioner for Patents
United States Patent and Trademark Office
P.O. Box 1450
Alexandria, VA 22313-1450
www.uspto.gov

INTELLECTUAL PROPERTY GROUP
FREDRIKSON & BYRON, P.A.
200 SOUTH SIXTH STREET, SUITE 4000
MINNEAPOLIS MN 55402

In re Application of	:	
MAXWELL, JEFFREY H.	:	DECISION ON PETITION
Application No. 12/607,760	:	TO MAKE SPECIAL UNDER
Filed: Oct. 28, 2009	:	THE GREEN TECHNOLOGY
Attorney Docket No. 12524.34.6.3	:	PILOT PROGRAM

This is a decision on the petition under 37 CFR 1.102, filed Dec. 31, 2009, to make the above-identified application special under the pilot program for applications pertaining to Green Technologies as set forth in 74 Federal Register Notice 64666 (December 8, 2009) and amended by 75 Federal Register Notice 28554 (May 21, 2010) and 75 Federal Register Notice 69049 (November 10, 2010).

The petition is **dismissed**.

A grantable petition to make an application special under 37 CFR 1.102 and the pilot program as set forth in 74 FR 64666 must be directed to a nonprovisional application filed under 35 USC 111(a) or be a national stage entry under 35 USC 371, exclusive of any reissue applications.

In order to qualify for special status, the following requirements must be met. 1) The application must have no more than 3 independent claims and no more than 20 total claims. 2) The application must not contain any multiple dependent claims. 3) The petition must state the basis for seeking special status, i.e., the claimed invention either: A) materially enhances the quality of the environment or B) materially contributes to: i) the discovery or development of renewable energy resources, ii) the more efficient utilization and conservation of energy resources, or iii) greenhouse gas emission reduction. 4) If the disclosure is not clear on its face that the claimed invention materially contributes under category (A) or (B), the petition must be accompanied by a statement by the applicant, assignee, or an attorney/agent registered to practice before the Office explaining how the materiality standard is met. 5) A statement that applicant will agree to make an election without traverse in a telephonic interview if a restriction requirement is made by the examiner. 6) The petition to make special must be filed electronically. 7) The petition

must be filed at least one day prior to the date that a first Office Action appears in the Patent Application Information Retrieval (PAIR) system. 8) The petition must be accompanied by a request for early publication in compliance with 37 CFR 1.219 and include the publication fee as set forth in 37 CFR 1.18(d).

The requirement for a fee for consideration of the petition to make special for applications pertaining to Green Technologies has been waived.

The petition lacks item # 4.

In regard to item 4, petitioner should note that the instant petition includes a statement identifying the basis for the special status (i.e., whether the instant invention (1) materially enhances the quality of the environment or materially contributes to (2) development of renewable energy resources or energy conservation, or (3) greenhouse gas reduction) as required by sections II and III of the notice. However, as stated in the notice, applicant must also provide a statement pertaining to the materiality standard if the application disclosure is not clear on its face as to the materiality of the basis for the special status of the invention. This petition lacks such a statement and it is not agreed that the application on its face meets that materiality standard. Petitioner indicates that the claimed invention materially contributes to more efficient utilization and energy conservation. This is not convincing. It is not clear how the claimed heat exchanger for ground energy or heat transfer will provide and enhance the quality of the environment or contribute to development of renewable energy resources or energy conservation or greenhouse gas reduction. In particular, claim 1 merely calls for a heat exchanger which has nothing to do with the quality of the environment or contribution to development of renewable energy resources or energy conservation or greenhouse gas reduction.

Any reconsideration of this decision should be submitted through the USPTO electronic filing system, EFS-Web, and selecting the document description of "Petition for Green Tech Pilot" on the EFS-Web screen.

Telephone inquiries concerning this decision should be directed to Henry C. Yuen at 571-272-4856.

The application will be forwarded to the Technology Center Art Unit 3744 for action in its regular turn.

/Henry C. Yuen/

Henry C. Yuen
Quality Assurance Specialist
Technology Center 3700

UNITED STATES PATENT AND TRADEMARK OFFICE

UNITED STATES DEPARTMENT OF COMMERCE
United States Patent and Trademark Office
Address: COMMISSIONER FOR PATENTS
P.O. Box 1450
Alexandria, Virginia 22313-1450
www.uspto.gov

APPLICATION NO.	FILING DATE	FIRST NAMED INVENTOR	ATTORNEY DOCKET NO.	CONFIRMATION NO.
12/607,760	10/28/2009	Jeffrey H. Maxwell	12524.37.6.3	5144

22859 7590 05/19/2011
FREDRIKSON & BYRON, P.A.
INTELLECTUAL PROPERTY GROUP
200 SOUTH SIXTH STREET, SUITE 4000
MINNEAPOLIS, MN 55402

EXAMINER
TYLER, CHERYL JACKSON

ART UNIT	PAPER NUMBER
3744	

NOTIFICATION DATE	DELIVERY MODE
05/19/2011	ELECTRONIC

Please find below and/or attached an Office communication concerning this application or proceeding.

The time period for reply, if any, is set in the attached communication.

Notice of the Office communication was sent electronically on above-indicated "Notification Date" to the following e-mail address(es):

IP@FREDLAW.COM

UNITED STATES PATENT AND TRADEMARK OFFICE

Commissioner for Patents
United States Patent and Trademark Office
P.O. Box 1450
Alexandria, VA 22313-1450
www.uspto.gov

FREDRIKSON & BYRON, P.A.
INTELLECTUAL PROPERTY GROUP
200 SOUTH SIXTH STREET, SUITE 4000
MINNEAPOLIS MN 55402

In re Application of	:	
MAXWELL, JEFFREY H.	:	DECISION ON PETITION
Application No. 12/607,760	:	TO MAKE SPECIAL UNDER
Filed: Oct. 28, 2009	:	THE GREEN TECHNOLOGY
Attorney Docket No. 12524.37.6.3	:	PILOT PROGRAM

This is a decision on the renewed/second petition under 37 CFR 1.102, filed May 10, 2011, to make the above-identified application special under the pilot program for applications pertaining to Green Technologies as set forth in 74 Federal Register Notice 64666 (December 8, 2009) and amended by 75 Federal Register Notice 28554 (May 21, 2010) and 75 Federal Register Notice 69049 (November 10, 2010).

The petition is **denied as untimely**.

A grantable petition to make an application special under 37 CFR 1.102 and the pilot program as set forth in 74 FR 64666 must be directed to a nonprovisional application filed under 35 USC 111(a) or be a national stage entry under 35 USC 371, exclusive of any reissue applications.

In order to qualify for special status, the following requirements must be met. 1) The application must have no more than 3 independent claims and no more than 20 total claims. 2) The application must not contain any multiple dependent claims. 3) The petition must state the basis for seeking special status, i.e., the claimed invention either: A) materially enhances the quality of the environment or B) materially contributes to: i) the discovery or development of renewable energy resources, ii) the more efficient utilization and conservation of energy resources, or iii) greenhouse gas emission reduction. 4) If the disclosure is not clear on its face that the claimed invention materially contributes under category (A) or (B), the petition must be accompanied by a statement by the applicant, assignee, or an attorney/agent registered to practice before the Office explaining how the materiality standard is met. 5) A statement that applicant will agree to make an election without traverse in a telephonic interview if a restriction requirement is made by the examiner. 6) The petition to make special must be filed electronically. 7) The petition

must be filed at least one day prior to the date that a first Office Action appears in the Patent Application Information Retrieval (PAIR) system. 8) The petition must be accompanied by a request for early publication in compliance with 37 CFR 1.219 and include the publication fee as set forth in 37 CFR 1.18(d).

The requirement for a fee for consideration of the petition to make special for applications pertaining to Green Technologies has been waived. The renewed petition was not timely filed within 30 days form the earlier decision mailed Jan. 20, 2011. The petition also lacks item # 4.

In regard to item 4, petitioner should note that the instant petition includes a statement identifying the basis for the special status (i.e., whether the instant invention (1) materially enhances the quality of the environment or materially contributes to (2) development of renewable energy resources or energy conservation, or (3) greenhouse gas reduction) as required by sections II and III of the notice. However, as stated in the notice, applicant must also provide a statement pertaining to the materiality standard if the application disclosure is not clear on its face as to the materiality of the basis for the special status of the invention. This petition lacks such a statement and it is not agreed that the application on its face meets that materiality standard. Petitioner argues that the claimed invention relates to energy conservation. This is not convincing. In particular, it is not clear how the claimed heat exchanger for ground energy or heat transfer will provide and enhance the quality of the environment or contribute to development of renewable energy resources or energy conservation or greenhouse gas reduction. In particular, claim 1 merely calls for a heat exchanger which has nothing to do with the quality of the environment or contribution to development of renewable energy resources or energy conservation or greenhouse gas reduction. The claimed heat exchanger happens to be placed in heat exchanger with ground. The heat exchanger could have been placed in a pool of water or anywhere heat can be dissipated or absorbed. This would not make the claimed heat exchanger a green technology. There is no connection between the claimed features and the green technology.

Under the circumstances, the request to make the above-identified application special under the pilot program for applications pertaining to Green Technologies cannot be granted.

Telephone inquiries concerning this decision should be directed to Henry C. Yuen at 571-272-4856. The application is being forwarded to the Technology Center Art Unit 3744 for action in its regular turn.

Since this is a decision for reconsideration, no further reconsideration or review of the matter will be undertaken by the Director.

/Henry C. Yuen/

Henry C. Yuen
Quality Assurance Specialist
Technology Center 3700

UNITED STATES PATENT AND TRADEMARK OFFICE

Commissioner for Patents
United States Patent and Trademark Office
P.O. Box 1450
Alexandria, VA 22313-1450
www.uspto.gov

GEORGE A. HERBSTER
100 CUMMINGS CENTER
SUITE 213-C
BEVERLY MA 01915

MAILED

JUN 06 2011

OFFICE OF PETITIONS

In re Application of :
Frederick Schmid, et al. :
Application No. 12/607,773 : DECISION ON PETITION
Filed: October 28, 2009 : UNDER 37 CFR 1.137(b)
Attorney Docket No. C3-004 :

This is a decision on the petition, filed May 3, 2011, which is being treated as a petition under 37 CFR 1.137(b) to revive the instant nonprovisional application for failure to timely notify the U.S. Patent and Trademark (USPTO) of the filing of an application in a foreign country, or under a multinational treaty that requires publication of applications eighteen months after filing. *See* 37 CFR 1.137(f).

The petition is **GRANTED**.

Petitioner states that the instant nonprovisional application is the subject of an application filed in an eighteen-month publication country on November 3, 2009. However, the USPTO was unintentionally not notified of this filing within 45 days subsequent to the filing of the subject application in an eighteen-month publication country.

In view of the above, this application became abandoned pursuant to 35 U.S.C. § 122(b)(2)(B)(iii) and 37 CFR 1.213(c) for failure to timely notify the Office of the filing of an application in a foreign country or under a multilateral international agreement that requires publication of applications 18 months after filing.

A petition to revive an application abandoned pursuant to 35 U.S.C. 122(b)(2)(B)(iii) for failure to notify the USPTO of a foreign filing must be accompanied by:

(1) the required reply which is met by the notification of such filing in a foreign country or under a multinational treaty;
(2) the petition fee as set forth in 37 CFR 1.17(m); and
(3) a statement that the entire delay in filing the required reply from the due date of the reply until the filing of a grantable petition was unintentional.

The instant petition has been found to be in compliance with 37 CFR 1.137(b). Accordingly, the failure to timely notify the USPTO of a foreign or international filing within 45 days after the date of filing of

such foreign or international application as provided by 35 U.S.C. § 122(b)(2)(B)(iii) and 37 CFR 1.213(c) is accepted as having been unintentionally delayed.

The previous Request and Certification under 35 U.S.C. § 122(b)(2)(B)(i) has been rescinded. A Notice Regarding Rescission of Nonpublication Request which sets forth the projected publication date of September 8, 2011 accompanies this decision on petition.

Telephone inquiries concerning this decision should be directed to Terri Johnson at (571) 272-2991.

This application is being referred to Technology Center Art Unit 1736 for examination in due course.

/Terri Johnson/
Terri Johnson
Petitions Examiner
Office of Petitions

ATTACHMENT: Notice Regarding Rescission of Nonpublication Request

UNITED STATES PATENT AND TRADEMARK OFFICE

UNITED STATES DEPARTMENT OF COMMERCE
United States Patent and Trademark Office
Address: COMMISSIONER FOR PATENTS
P.O. Box 1450
Alexandria, Virginia 22313-1450
www.uspto.gov

APPLICATION NUMBER	FILING OR 371(C) DATE	FIRST NAMED APPLICANT	ATTY. DOCKET NO./TITLE
12/607,773	10/28/2009	Frederick Schmid	C3-004

CONFIRMATION NO. 5174

34021
GEORGE A. HERBSTER
100 CUMMINGS CENTER
SUITE 213-C
BEVERLY, MA 01915

NONPUBLICATION RESCISSION LETTER

OC000000048013569

Date Mailed: 06/02/2011

Communication Regarding Rescission Of Nonpublication Request and/or Notice of Foreign Filing

Applicant's rescission of the previously-filed nonpublication request and/or notice of foreign filing is acknowledged. The paper has been reflected in the Patent and Trademark Office's (USPTO's) computer records so that the earliest possible projected publication date can be assigned.

The projected publication date is 09/08/2011.

If applicant rescinded the nonpublication request before or on the date of "foreign filing,"[1] then no notice of foreign filing is required.

If applicant foreign filed the application after filing the above application and before filing the rescission, and the rescission did not also include a notice of foreign filing, then a notice of foreign filing (not merely a rescission) is required to be filed within 45 days of the date of foreign filing. See 35 U.S.C. § 122(b)(2)(B)(iii), and Clarification of the United States Patent and Trademark Office's Interpretation of the Provisions of 35 U.S.C. § 122(b)(2)(B)(ii)-(iv), 1272 Off. Gaz. Pat. Office 22 (July 1, 2003).

If a notice of foreign filing is required and is not filed within 45 days of the date of foreign filing, then the application becomes abandoned pursuant to 35 U.S.C. § 122(b)(2)(B)(iii). In this situation, applicant should either file a petition to revive or notify the Office that the application is abandoned. See 37 CFR 1.137(f). Any such petition to revive will be forwarded to the Office of Petitions for a decision. Note that the filing of the petition will not operate to stay any period of reply that may be running against the application.

Questions regarding petitions to revive should be directed to the Office of Petitions at (571) 272-3282.

[1] Note, for purpose of this notice, that "foreign filing" means "filing an application directed to the same invention in another country, or under a multilateral international agreement, that requires publication of applications 18 months after filing".

/tsjohnson/

Office of Data Management, Application Assistance Unit (571) 272-4000, or (571) 272-4200, or 1-888-786-0101

UNITED STATES PATENT AND TRADEMARK OFFICE

Commissioner for Patents
United States Patent and Trademark Office
P.O. Box 1450
Alexandria, VA 22313-1450
www.uspto.gov

GEORGE A. HERBSTER
100 CUMMINGS CENTER
SUITE 213-C
BEVERLY MA 01915

MAILED
SEP 26 2011
OFFICE OF PETITIONS

In re Application of:	:	
Frederick Schmid et al.	:	
Application No. 12/607,773	:	NOTICE
Filed: October 28, 2009	:	
Attorney Docket No. C3-004	:	

This is a notice regarding your request for acceptance of a fee deficiency submission under 37 CFR 1.28 filed August 30, 2011. On September 1, 1998, the Court of Appeals for the Federal Circuit held that 37 CFR 1.28(c) is the sole provision governing the time for correction of the erroneous payment of the issue fee as a small entity. **See DH Technology v. Synergystex International, Inc. 154 F.3d 1333, 47 USPQ2d 1865 (Fed. Cir. Sept. 1, 1998).**

The Office no longer investigates or rejects original or reissue applications under 37 CFR 1.56. **1098 Off. Gaz. Pat. Office 502 (January 3, 1989)**. Therefore, nothing in this Notice is intended to imply that an investigation was done.

Your fee deficiency submission under 37 CFR 1.28 is hereby accepted. The petition is **GRANTED**.

This application is no longer entitled to small entity status. Accordingly, all future fees paid in this application must be paid at the large entity rate.

This file is being forwarded to Technology Center 1736.

Telephone inquiries related to this decision should be directed to the Kimberly Inabinet at (571) 272-4618.

/Kimberly Inabinet/
Kimberly Inabinet
Petitions Examiner
Office of Petitions

Doc Code: PET.GREEN
Document Description: Petition for Green Tech Pilot

PTO/SB/420 (05-10)
Approved for use through 01/31/2011. OMB 0651-0062
U.S. Patent and Trademark Office; U. S. DEPARTMENT OF COMMERCE
Under the Paperwork Reduction Act of 1995, no persons are required to respond to a collection of information unless it displays a valid OMB control number.

PETITION TO MAKE SPECIAL UNDER THE GREEN TECHNOLOGY PILOT PROGRAM

Attorney Docket Number: 34087US1	Application Number (if known): 12/607,809	Filing date: 10-28-2009

First Named Inventor: Bruce B. Randolph

Title: PROCESS FOR UPGRADING HYDROCARBONS

APPLICANT HEREBY REQUESTS TO PARTICIPATE IN THE GREEN TECHNOLOGY PILOT PROGRAM FOR THE ABOVE-IDENTIFIED APPLICATION. See Instruction Sheet on page 2.

This petition must be timely filed electronically using the USPTO electronic filing system, EFS-Web.

1. By filing this petition:

   Applicant is requesting early publication: Applicant hereby requests early publication under 37 CFR 1.219 and the publication fee set forth in 37 CFR 1.18(d) accompanies this request.

2. By filing this petition: applicant is agreeing to make an election without traverse in a telephonic interview and elect an invention that meets the eligibility requirements set forth in the notice titled "Pilot Program for Green Technologies Including Greenhouse Gas Reduction," as modified by the notice titled "Elimination of Classification Requirement in the Green Technology Pilot Program," each of which was published in the Federal Register, if the Office determines that the claims are not obviously directed to a single invention.

3. This request is accompanied by statements of special status for the eligibility requirement.

4. The application contains no more than three (3) independent claims and twenty (20) total claims.

5. The application does not contain any multiple dependent claims.

6. Other attachments: _____

Signature /richardyuen/	Date November 12, 2010
Name (Print/Typed) Richard Yuen	Registration Number 65287

Note: *Signatures of all the inventors or assignees of record of the entire interest or their representative(s) are required in accordance with 37 CFR 1.33 and 11.18. Please see 37 CFR 1.4(d) for the form of the signature. If necessary, submit multiple forms for more than one signature, see below*.*

☑ *Total of 1 forms are submitted.

The information is required to obtain or retain a benefit by the public which is to file (and by the USPTO to process) an application. Confidentiality is governed by 35 U.S.C. 122 and 37 CFR 1.11 and 1.14. This collection is estimated to take 1 hour to complete, including gathering, preparing, and submitting the completed application form to the USPTO. Time will vary depending upon the individual case. Any comments on the amount of time you require to complete this form and/or suggestions for reducing this burden, should be sent to the Chief Information Officer, U.S. Patent and Trademark Office, U.S. Department of Commerce, P.O. Box 1450, Alexandria, VA 22313-1450. DO NOT SEND FEES OR COMPLETED FORMS TO THIS ADDRESS. **SEND TO: Commissioner for Patents, P.O. Box 1450, Alexandria, VA 22313-1450.**

If you need assistance in completing the form, call 1-800-PTO-9199 and select option 2.

Appl. No.: 12/607,809 Confirmation No.: 5238

Applicant: Bruce B. Randolph

Filed: 10/28/2009

TC/A.U.: 1797

Examiner: N/A

Docket No.: 34087US1

Customer No.: 28841

Title: Process for upgrading hydrocarbons

Commissioner for Patents
P.O. Box 1450
Alexandria VA 22313-1450

STATEMENTS OF SPECIAL STATUS

Sir:

In furtherance to the accompanying Petition to Make Special Under the Green Technology Pilot Program, Applicants submit the following in support thereof. The claimed invention in the above-identified application materially enhances the quality of the environment by reducing the amount of hazardous chemicals in gasoline. In particular, the invention relates to an improved process to provide a gasoline product with low Reid Vapor Pressure which reduces the amount of hazardous chemicals produced when gasoline is burned.

Respectfully Submitted,

Date: November 12, 2010

By: /richardyuen/
Attorney
Registration No. 65287
Email: richard.y.yuen@conocophillips.com

CONOCOPHILLIPS COMPANY – I.P. LEGAL
ATTN: Docketing
600 N. Dairy Ashford, MA-1135
Houston, Texas 77079
(281) 293-4126
(281) 293-2127 (Fax)

UNITED STATES PATENT AND TRADEMARK OFFICE

UNITED STATES DEPARTMENT OF COMMERCE
United States Patent and Trademark Office
Address: COMMISSIONER FOR PATENTS
P.O. Box 1450
Alexandria, Virginia 22313-1450
www.uspto.gov

APPLICATION NO.	FILING DATE	FIRST NAMED INVENTOR	ATTORNEY DOCKET NO.	CONFIRMATION NO.
12/607,809	10/28/2009	Bruce B. Randolph	34087US1	5238

28841 7590 11/22/2010
ConocoPhillips Company - IP Services Group
Attention: DOCKETING
600 N. Dairy Ashford
Bldg. MA-1135
Houston, TX 77079

EXAMINER

ART UNIT	PAPER NUMBER
1797	

NOTIFICATION DATE	DELIVERY MODE
11/22/2010	ELECTRONIC

Please find below and/or attached an Office communication concerning this application or proceeding.

The time period for reply, if any, is set in the attached communication.

Notice of the Office communication was sent electronically on above-indicated "Notification Date" to the following e-mail address(es):

Legal-IP@conocophillips.com

UNITED STATES PATENT AND TRADEMARK OFFICE

Commissioner for Patents
United States Patent and Trademark Office
P.O. Box 1450
Alexandria, VA 22313-1450
www.uspto.gov

ConocoPhillips Company - IP Services Group
Attention: DOCKETING
600 N. Dairy Ashford
Bldg. MA-1135
Houston TX 77079

NOV 22 2010

In re Application of	:	
Randolph et al.	:	DECISION ON PETITION
Application No. 12/607,809	:	TO MAKE SPECIAL UNDER
Filed: 12/28/2009	:	THE GREEN TECHNOLOGY
Attorney Docket No. **34087US1**	:	PILOT PROGRAM

This is a decision on the petition under 37 CFR 1.102, filed 11/12/2010, to make the above-identified application special under the pilot program for applications pertaining to Green Technologies as set forth in 74 Federal Register Notice 64666 (December 8, 2009) and amended by 75 Federal Register Notice 28554 (May 21, 2010) and 75 Federal Register Notice 69049 (November 10, 2010).

The petition is **GRANTED**.

A grantable petition to make an application special under 37 CFR 1.102 and the pilot program as set forth in 74 FR 64666 must be directed to a nonprovisional application filed under 35 USC 111(a) or be a national stage entry under 35 USC 371, exclusive of any reissue applications.

In order to qualify for special status, the following requirements must be met. 1) The application must have no more than 3 independent claims and no more than 20 total claims. 2) The application must not contain any multiple dependent claims. 3) The petition must state the basis for seeking special status, i.e., the claimed invention either: A) materially enhances the quality of the environment or B) materially contributes to: i) the discovery or development of renewable energy resources, ii) the more efficient utilization and conservation of energy resources, or iii) greenhouse gas emission reduction. 4) If the disclosure is not clear on its face that the claimed invention materially contributes under category (A) or (B), the petition must be accompanied by a statement by the applicant, assignee, or an attorney/agent registered to practice before the Office explaining how the materiality standard is met. 5) A statement that applicant will agree to make an election without traverse in a telephonic interview if a restriction requirement is made by the examiner. 6) The petition to make special must be filed electronically. 7) The petition must be filed at least one day prior to the date that a first Office Action appears in the Patent Application Information Retrieval (PAIR) system. 8) The petition must be accompanied by a

request for early publication in compliance with 37 CFR 1.219 and include the publication fee as set forth in 37 CFR 1.18(d).

The requirement for a fee for consideration of the petition to make special for applications pertaining to Green Technologies has been waived.

The instant petition complies with items 1 – 8 above. Accordingly, the above-identified application has been accorded "special" status.

Telephone inquires concerning this decision should be directed to Tom Dunn at 571-272-1171.

The application is being forwarded to the Technology Center Art Unit 1797 for action on the merits commensurate with this decision.

/Tom Dunn/

Tom Dunn
Quality Assurance Specialist
Technology Center 1700

PTO/SB/20PCT-US (09-10)
Approved for use through 01/31/2012. OMB 0651-0058
U.S. Patent and Trademark Office; U. S. DEPARTMENT OF COMMERCE
Under the Paperwork Reduction Act of 1995, no persons are required to respond to a collection of information unless it displays a valid OMB control number.

REQUEST FOR PARTICIPATION IN THE PATENT COOPERATION TREATY - PATENT PROSECUTION HIGHWAY (PCT-PPH) PILOT PROGRAM IN A U.S. APPLICATION WHERE THE USPTO WAS THE ISA OR IPEA

Application No:	12/607,870	Filing date:	10/28/09
First Named Inventor:	Craig Schelling		
Title of the Invention:	COMPRESSION PLATE KIT AND METHODS FOR REPAIRING BONE DISCONTINUITIES		

THIS REQUEST FOR PARTICIPATION IN THE PCT-PPH PILOT PROGRAM ALONG WITH THE REQUIRED DOCUMENTS MUST BE SUBMITTED VIA EFS-WEB. INFORMATION REGARDING EFS-WEB IS AVAILABLE AT HTTP://WWW.USPTO.GOV/EBC/EFS_HELP.HTML

APPLICANT HEREBY REQUESTS PARTICIPATION IN THE PCT-PPH PROGRAM AND PETITIONS TO MAKE THE ABOVE-IDENTIFIED APPLICATION SPECIAL UNDER THE PCT-PPH PROGRAM.

The above-identified application is (1) a national stage entry of the corresponding PCT application, or (2) a national stage entry of another PCT application which claims priority to the corresponding PCT application, or (3) a national application that claims domestic/ foreign priority to the corresponding PCT application, or (4) a national application which forms the basis for the priority claim in the corresponding PCT application, or (5) a continuing application of a U.S. application that satisfies one of (1) to (4) above, or (6) a U.S. application that claims domestic benefit to a U.S. provisional application which forms the basis for the priority claim in the corresponding PCT application.

The corresponding PCT application number(s) is/are: PCT/US10/53681

The international date of the corresponding PCT application(s) is/are:

October 22, 2010

I. List of Required Documents:

a. **A copy of the latest international work product (WO/ISA, WO/IPEA, or IPER) in the above–identified corresponding PCT application(s)**

- [x] Is attached
- [ ] Is not attached because the document is already in the U.S. application.

b. **A copy of all claims which were indicated as having novelty, inventive step and industrial applicability in the above-identified corresponding PCT application(s).**

- [x] Is attached.
- [ ] Is not attached because the document is already in the U.S. application.

c. **English translations of the documents in a. and b. above are attached (if the documents are not in the English language). A statement that the English translation is accurate is attached for the document in b. above.**

This collection of information is required by 35 U.S.C. 119, 37 CFR 1.55, and 37 CFR 1.102(d). The information is required to obtain or retain a benefit by the public, which is to file (and by the USPTO to process) an application. Confidentiality is governed by 35 U.S.C. 122 and 37 CFR 1.11 and 1.14. This collection is estimated to take 2 hours to complete, including gathering, preparing, and submitting the completed application form to the USPTO. Time will vary depending upon the individual case. Any comments on the amount of time you require to complete this form and/or suggestions for reducing this burden should be sent to the Chief Information Officer, U.S. Patent and Trademark Office, U.S. Department of Commerce, P.O. Box 1450, Alexandria, VA 22313-1450. DO NOT SEND FEES OR COMPLETED FORMS TO THIS ADDRESS.

Under the Paperwork Reduction Act of 1995, no persons are required to respond to a collection of information unless it displays a valid OMB control number.

REQUEST FOR PARTICIPATION IN THE PCT-PPH PILOT PROGRAM IN A U.S. APPLICATION WHERE THE USPTO WAS THE ISA OR IPEA

(continued)

Application No.:	12/607,870
First Named Inventor:	Craig Schelling

d. **(1) An information disclosure statement listing the documents cited in the international work products (ISR, WO/ISA, WO/IPEA, IPER) of the corresponding PCT application.**

☐ Is attached

☒ Has already been filed in the above-identified U.S. application on 2/15/11

(2) Copies of all documents (except) for U.S. patents or U.S. patent application publications)

☐ Are attached.

☒ Have already been filed in the above-identified U.S. application on 5/27/11, 2/15/11, 4/21/10, 12/21/09

II. Claims Correspondence Table:

Claims in US Application	Patentable Claims in the corresponding PCT Application	Explanation regarding the correspondence
18	18	Same claim and same dependency

III. All the claims in the US application sufficiently correspond to the patentable claims in the corresponding PCT application.

Signature /David B. Dellenbach/	Date 5/27/11
Name (Print/Typed) David B. Dellenbach	Registration Number 39,166

Privacy Act Statement

The **Privacy Act of 1974 (P.L. 93-579)** requires that you be given certain information in connection with your submission of the attached form related to a patent application or patent. Accordingly, pursuant to the requirements of the Act, please be advised that: (1) the general authority for the collection of this information is 35 U.S.C. 2(b)(2); (2) furnishing of the information solicited is voluntary; and (3) the principal purpose for which the information is used by the U.S. Patent and Trademark Office is to process and/or examine your submission related to a patent application or patent. If you do not furnish the requested information, the U.S. Patent and Trademark Office may not be able to process and/or examine your submission, which may result in termination of proceedings or abandonment of the application or expiration of the patent.

The information provided by you in this form will be subject to the following routine uses:

1. The information on this form will be treated confidentially to the extent allowed under the Freedom of Information Act (5 U.S.C. 552) and the Privacy Act (5 U.S.C 552a). Records from this system of records may be disclosed to the Department of Justice to determine whether disclosure of these records is required by the Freedom of Information Act.
2. A record from this system of records may be disclosed, as a routine use, in the course of presenting evidence to a court, magistrate, or administrative tribunal, including disclosures to opposing counsel in the course of settlement negotiations.
3. A record in this system of records may be disclosed, as a routine use, to a Member of Congress submitting a request involving an individual, to whom the record pertains, when the individual has requested assistance from the Member with respect to the subject matter of the record.
4. A record in this system of records may be disclosed, as a routine use, to a contractor of the Agency having need for the information in order to perform a contract. Recipients of information shall be required to comply with the requirements of the Privacy Act of 1974, as amended, pursuant to 5 U.S.C. 552a(m).
5. A record related to an International Application filed under the Patent Cooperation Treaty in this system of records may be disclosed, as a routine use, to the International Bureau of the World Intellectual Property Organization, pursuant to the Patent Cooperation Treaty.
6. A record in this system of records may be disclosed, as a routine use, to another federal agency for purposes of National Security review (35 U.S.C. 181) and for review pursuant to the Atomic Energy Act (42 U.S.C. 218(c)).
7. A record from this system of records may be disclosed, as a routine use, to the Administrator, General Services, or his/her designee, during an inspection of records conducted by GSA as part of that agency's responsibility to recommend improvements in records management practices and programs, under authority of 44 U.S.C. 2904 and 2906. Such disclosure shall be made in accordance with the GSA regulations governing inspection of records for this purpose, and any other relevant (*i.e.*, GSA or Commerce) directive. Such disclosure shall not be used to make determinations about individuals.
8. A record from this system of records may be disclosed, as a routine use, to the public after either publication of the application pursuant to 35 U.S.C. 122(b) or issuance of a patent pursuant to 35 U.S.C. 151. Further, a record may be disclosed, subject to the limitations of 37 CFR 1.14, as a routine use, to the public if the record was filed in an application which became abandoned or in which the proceedings were terminated and which application is referenced by either a published application, an application open to public inspection or an issued patent.
9. A record from this system of records may be disclosed, as a routine use, to a Federal, State, or local law enforcement agency, if the USPTO becomes aware of a violation or potential violation of law or regulation.

UNITED STATES PATENT AND TRADEMARK OFFICE

UNITED STATES DEPARTMENT OF COMMERCE
United States Patent and Trademark Office
Address: COMMISSIONER FOR PATENTS
P.O. Box 1450
Alexandria, Virginia 22313-1450
www.uspto.gov

APPLICATION NO.	FILING DATE	FIRST NAMED INVENTOR	ATTORNEY DOCKET NO.	CONFIRMATION NO.
12/607,870	10/28/2009	Craig Schelling	16199.10	5362

22913 7590 05/31/2011
Workman Nydegger
1000 Eagle Gate Tower
60 East South Temple
Salt Lake City, UT 84111

EXAMINER
BARRETT, THOMAS C

ART UNIT	PAPER NUMBER
3775	

MAIL DATE	DELIVERY MODE
05/31/2011	PAPER

Please find below and/or attached an Office communication concerning this application or proceeding.

The time period for reply, if any, is set in the attached communication.

UNITED STATES PATENT AND TRADEMARK OFFICE

Commissioner for Patents
United States Patent and Trademark Office
P.O. Box 1450
Alexandria, VA 22313-1450
www.uspto.gov

Workman Nydegger
1000 Eagle Gate Tower
60 East South Temple
Salt Lake City UT 84111

In re Application of	:	
SCHELLING, CRAIG	:	DECISION ON REQUEST TO
Application No. 12/607,870	:	PARTICIPATE IN PATENT
Filed: Oct. 28, 2009	:	PCT/PROSECUTION HIGHWAY
Attorney Docket No. 16199.10	:	PROGRAM AND PETITION
For: COMPRESSION PLATE KIT AND	:	TO MAKE SPECIAL UNDER
METHODS FOR REPAIRING BONE	:	37 CFR 1.102(a)
DISCONTINUITIES		

This is a decision on the request to participate in the Patent Prosecution Highway (PPH) program and the petition under 37 CFR 1.102(a), filed May 27. 2011 to make the above-identified application special.

The request and petition are dismissed.

A grantable request to participate in the PPH program and petition to make special require:
(1) The U.S. application must disclose an eligible relationship to one or more PCT applications filed in the JPO, EPO, KIPO or USPTO;
(2) Applicant must submit a copy of the allowable/patentable claim(s) from the PCT application(s) latest international work product (the written opinion or the IPER) along with an English translation thereof and a statement that the English translation is accurate;
(3) All the claims in the U.S. application must sufficiently correspond or be amended to sufficiently correspond to the allowable/patentable claim(s) in the PCT application(s);
(4) Examination of the U.S. application has not begun;
(5) Applicant must submit a copy of the latest international work product from the PCT application containing the allowable/patentable claim(s) along with an English translation thereof and a statement that the English translation is accurate; and
(6) Applicant must submit an IDS listing the documents cited by the PCT examiner in the international work product along with copies of documents except U.S. patents or U.S. patent application publications.

The request to participate in the PPH program and petition met all conditions except Items #3 and #5.

The request to participate in the PPH pilot program and petition does not include claim comparison charts that correspond with the PCT allowed claim 18. Currently, this application contains claims 1-20 as filed on October 28, 2009. Petitioner also failed to include a PCT search opinion report indicating claims 1-17 and 19-20 comply with Novelty, Inventive Step and Industrial Applicability. The current PCT search opinion of Dec. 21, 2010 only shows claim 18 complies with Novelty, Inventive Step and Industrial Applicability. In order to grant the PPH Request in this case, a complaint amendment with a new list of claims cancelling the non-allowed claims 1-20 and place claim 18 in independent form is required.

Applicant is encouraged to cite and submit all relevant prior art references, if any, to facilitate examination in this application.

Applicant is given a time period of **ONE MONTH or THIRTY DAYS**, whichever is longer, from the mailing date of this decision to correct the deficiencies. **NO EXTENSION OF TIME UNDER 37 CFR 1.136 IS PERMITTED.** If the deficiencies are not corrected with the time period given, the application will await action on the merits for claims 1-29 as originally filed in its regular turn.

Response must be filed via EFS-Web. Telephone inquiries concerning this decision should be directed to Henry C. Yuen, at 571-272-4856.

/Henry C. Yuen/

Henry C. Yuen
Special Programs Examiner
Technology Center 3700
Tel: 571-272-4856

UNITED STATES PATENT AND TRADEMARK OFFICE

UNITED STATES DEPARTMENT OF COMMERCE
United States Patent and Trademark Office
Address: COMMISSIONER FOR PATENTS
P.O. Box 1450
Alexandria, Virginia 22313-1450
www.uspto.gov

APPLICATION NO.	FILING DATE	FIRST NAMED INVENTOR	ATTORNEY DOCKET NO.	CONFIRMATION NO.
12/607,870	10/28/2009	Craig Schelling	16199.10	5362

22913 7590 07/20/2011
Workman Nydegger
1000 Eagle Gate Tower
60 East South Temple
Salt Lake City, UT 84111

EXAMINER
BARRETT, THOMAS C

ART UNIT	PAPER NUMBER
3775	

MAIL DATE	DELIVERY MODE
07/20/2011	PAPER

Please find below and/or attached an Office communication concerning this application or proceeding.

The time period for reply, if any, is set in the attached communication.

UNITED STATES PATENT AND TRADEMARK OFFICE

Commissioner for Patents
United States Patent and Trademark Office
P.O. Box 1450
Alexandria, VA 22313-1450
www.uspto.gov

Workman Nydegger
1000 Eagle Gate Tower
60 East South Temple
Salt Lake City UT 84111

In re Application of:
SCHELLING, CRAIG et al
Serial No.: 12/607870
Filed: October 28, 2009
Attorney Docket No. : 16199.10
Title: COMPRESSION PLATE KIT AND METHODS FOR REPAIRING BONE DISCONTINUITIES

DECISION ON A REQUEST TO PARTICIPATE IN PCT/PATENT PROSECUTION HIGHWAY PROGRAM AND PETITION TO MAKE SPECIAL UNDER CFR 1.102(a)

This is a decision on the request to participate in the Patent Prosecution Highway (PPH) program and the petition under 37 CFR 1.102(a), filed June 28, 2011 to make the above-identified application special.

The request and petition are **granted.**

A grantable request to participate in the PPH pilot program and petition to make special require:

(1) The U.S. application must validly claim priority under 35 U.S.C. 119(a) to one or more PCT applications filed in the JPO, EPO, KIPO, or USPTO;
(2) Applicant must submit a copy of the allowable/patentable claim(s) from the PCT application(s) latest international work product (the written opinion or the IPER) along with an English translation thereof and a statement that the English translation is accurate;
(3) All the claims in the U.S. application must sufficiently correspond or be amended to sufficiently correspond to the allowable/patentable claim(s) in the PCT application(s);
(4) Examination of the U.S. application has not begun;
(5) Applicant must submit a copy of the latest international work product from the PCT application containing the allowable/patentable claim(s) along with an English translation thereof and a statement that the English translation is accurate; and
(6) Applicant must submit an IDS listing the documents cited by the PCT examiner in the international work product along with copies of documents except U.S. patents or U.S. patent application publications.

A previous decision on this petition was mailed on May 31, 2011. The previous decision stated the request had failed to meet Item #3 and Item #5 due to lack of claim correspondence and a missing PCT search opinion report on claims 1-17 and 19-20. Since then, Applicant have submitted a response indicating that claims 1-15 have been cancelled and claim 16 amended to correspond to the limitations of the original claim 18. Applicant also asserts that the PCT search report had already been submitted previously. In finding Applicant's arguments persuasive, the deficiencies indicated in the last petition decision have been corrected in a timely manner.

In light of the petition being properly submitted, the request to participate in the PPH program and the petition comply with the above requirements. Accordingly, the above-identified application has been accorded "special" status.

The applicant is encouraged to cite and submit all relevant prior art references, if any, to facilitate examination in this application.

Response must be filed via EFS-Web. Telephone inquiries concerning this decision should be directed to Henry C. Yuen, at 571-272-4856.

Petition is **granted**.

/Henry C. Yuen/

Henry C. Yuen
Special Programs Examiner
Technology Center 3700
Tel: 571-272-4856

UNITED STATES PATENT AND TRADEMARK OFFICE

Commissioner for Patents
United States Patent and Trademark Office
P.O. Box 1450
Alexandria, VA 22313-1450
www.uspto.gov

KLEMCHUK KUBASTA LLP
8150 N CENTRAL EXPRESSWAY
SUITE 1150
DALLAS TX 75206

MAILED

SEP 07 2010

OFFICE OF PETITIONS

In re Application of	:	
Blair, Warner T.	:	DECISION ON PETITION
Application No. 12/607,873	:	TO WITHDRAW
Filed: October 28, 2009	:	FROM RECORD
Attorney Docket No. 001083-0002	:	

This is a decision on the Request to Withdraw as attorney or agent of record under 37 C.F.R. § 1.36(b), filed August 3, 2010.

The request is **APPROVED**.

A grantable request to withdraw as attorney/agent of record must be signed by every attorney/agent seeking to withdraw or contain a clear indication that one attorney is signing on behalf of another/others. The Office will require the practitioner(s) to certify that he, she or they have: (1) given reasonable notice to the client, prior to the expiration of the reply period, which the practitioner(s) intends to withdraw from employment; (2) delivered to the client or a duly authorized representative of the client all papers and property (including funds) to which the client is entitled; and (3) notified the client of any replies that may be due and the time frame within which the client must respond, pursuant to 37 CFR 10.40 (c).

The request was signed by Kelly J. Kubasta on behalf of all attorneys/agents of record who are associated with Customer Number 41804. All attorneys/agents associated with Customer Number 41804 have been withdrawn. Applicant is reminded that there is no attorney of record at this time.

All future correspondence will be directed to the first-named inventor, Warner T. Blair, at the address indicated below.

Telephone inquires concerning this decision should be directed to the undersigned at (571) 272-3206. All other inquires concerning either the examination or status of the application should be directed to the Technology Center.

Liana Walsh
Petitions Examiner
Office of Petitions

cc: WARNER T. BLAIR
1100 HICKORY BEND LANE
FORT WORTH, TX 76108

Doc Code: PET.GREEN
Document Description: Petition for Green Tech Pilot

PTO/SB/420 (03-11)

PETITION TO MAKE SPECIAL UNDER THE GREEN TECHNOLOGY PILOT PROGRAM

Attorney Docket Number: 12524.37.6.2	Application Number (if known): 12/607,930	Filing date: 10-28-2009

First Named Inventor: Jeffrey H. Maxwell

Title: Controls for High-Efficiency Heat Pumps

APPLICANT HEREBY REQUESTS TO PARTICIPATE IN THE GREEN TECHNOLOGY PILOT PROGRAM FOR THE ABOVE-IDENTIFIED APPLICATION. See Instruction Sheet on page 2.

This petition must be timely filed electronically using the USPTO electronic filing system, EFS-Web.

1. By filing this petition:

   Applicant is requesting early publication: Applicant hereby requests early publication under 37 CFR 1.219 and the publication fee set forth in 37 CFR 1.18(d) accompanies this request.

2. By filing this petition: applicant is agreeing to make an election without traverse in a telephonic interview and elect an invention that meets the eligibility requirements for the Green Technology Pilot Program, if the Office determines that the claims are not obviously directed to a single invention. See Instruction Sheet.

3. This request is accompanied by statements of special status for the eligibility requirement.

4. The application contains no more than three (3) independent claims and twenty (20) total claims.

5. The application does not contain any multiple dependent claims.

6. Other attachments: _____

Signature /Thomas R. Hipkins/	Date May 10, 2011
Name (Print/Typed) Thomas R. Hipkins	Registration Number 57659

Note: *Signatures of all the inventors or assignees of record of the entire interest or their representative(s) are required in accordance with 37 CFR 1.33 and 11.18. Please see 37 CFR 1.4(d) for the form of the signature. If necessary, submit multiple forms for more than one signature, see below*.*

☐ *Total of _____ forms are submitted.

If you need assistance in completing the form, call 1-800-PTO-9199 and select option 2.

Instruction Sheet for
Petition to Make Special Under the Green Technology Pilot Program

(Not to be Submitted to the USPTO)

The following is a summary of the requirements (for more information see the notices (i) "Pilot Program for Green Technologies Including Greenhouse Gas Reduction," (ii) "Elimination of Classification Requirement in the Green Technology Pilot Program," and (iii) "Expansion and Extension of the Green Technology Pilot Program," available on the USPTO web site at http://www.uspto.gov/patents/init_events/green_tech.jsp):

(1) The application must be a non-reissue, non-provisional utility application filed under 35 U.S.C. 111(a), or an international application that has entered the national stage in compliance with 35 U.S.C. 371, irrespective of the filing date of the application. Reexamination proceedings are excluded from this pilot program.

(2) The application must contain three or fewer independent claims and twenty or fewer total claims. The application must not contain any multiple dependent claims. For an application that contains more than three independent claims or twenty total claims, or multiple dependent claims, applicant must file a preliminary amendment in compliance with 37 CFR 1.121 to cancel the excess claims and/or the multiple dependent claims at the time the petition to make special is filed.

(3) The claims must be directed to a single invention that materially enhances the quality of the environment, or that materially contributes to: (1) the discovery or development of renewable energy resources; (2) the more efficient utilization and conservation of energy resources; or (3) green house gas emission reduction (see the eligibility requirements of sections II and III of the notice (i) cited above). The petition must include a statement that, if the USPTO determines that the claims are directed to multiple inventions (e.g., in a restriction requirement), applicant will agree to make an election without traverse in a telephonic interview, and elect an invention that meets the eligibility requirements in section II or III of the notice (i) cited above.

(4) The petition to make special must be timely filed electronically using the USPTO electronic filing system, EFS-Web, and selecting the document description of "Petition for Green Tech Pilot" on the EFS-Web screen. Applicant should use form PTO/SB/420, which is available as a Portable Document Format (PDF) fillable form in EFS-Web and on the USPTO Web site.

(5) The petition to make special must be filed at least one day prior to the date that a first Office action (which may be an Office action containing only a restriction requirement) appears in the Patent Application Information Retrieval (PAIR) system. Applicant may check the status of the application using PAIR.

(6) The petition to make special must be accompanied by a request for early publication in compliance with 37 CFR 1.219 and the publication fee set forth in 37 CFR 1.18(d).

Privacy Act Statement

The **Privacy Act of 1974 (P.L. 93-579)** requires that you be given certain information in connection with your submission of the attached form related to a patent application or patent. Accordingly, pursuant to the requirements of the Act, please be advised that: (1) the general authority for the collection of this information is 35 U.S.C. 2(b)(2); (2) furnishing of the information solicited is voluntary; and (3) the principal purpose for which the information is used by the U.S. Patent and Trademark Office is to process and/or examine your submission related to a patent application or patent. If you do not furnish the requested information, the U.S. Patent and Trademark Office may not be able to process and/or examine your submission, which may result in termination of proceedings or abandonment of the application or expiration of the patent.

The information provided by you in this form will be subject to the following routine uses:

1. The information on this form will be treated confidentially to the extent allowed under the Freedom of Information Act (5 U.S.C. 552) and the Privacy Act (5 U.S.C 552a). Records from this system of records may be disclosed to the Department of Justice to determine whether disclosure of these records is required by the Freedom of Information Act.
2. A record from this system of records may be disclosed, as a routine use, in the course of presenting evidence to a court, magistrate, or administrative tribunal, including disclosures to opposing counsel in the course of settlement negotiations.
3. A record in this system of records may be disclosed, as a routine use, to a Member of Congress submitting a request involving an individual, to whom the record pertains, when the individual has requested assistance from the Member with respect to the subject matter of the record.
4. A record in this system of records may be disclosed, as a routine use, to a contractor of the Agency having need for the information in order to perform a contract. Recipients of information shall be required to comply with the requirements of the Privacy Act of 1974, as amended, pursuant to 5 U.S.C. 552a(m).
5. A record related to an International Application filed under the Patent Cooperation Treaty in this system of records may be disclosed, as a routine use, to the International Bureau of the World Intellectual Property Organization, pursuant to the Patent Cooperation Treaty.
6. A record in this system of records may be disclosed, as a routine use, to another federal agency for purposes of National Security review (35 U.S.C. 181) and for review pursuant to the Atomic Energy Act (42 U.S.C. 218(c)).
7. A record from this system of records may be disclosed, as a routine use, to the Administrator, General Services, or his/her designee, during an inspection of records conducted by GSA as part of that agency's responsibility to recommend improvements in records management practices and programs, under authority of 44 U.S.C. 2904 and 2906. Such disclosure shall be made in accordance with the GSA regulations governing inspection of records for this purpose, and any other relevant (*i.e.*, GSA or Commerce) directive. Such disclosure shall not be used to make determinations about individuals.
8. A record from this system of records may be disclosed, as a routine use, to the public after either publication of the application pursuant to 35 U.S.C. 122(b) or issuance of a patent pursuant to 35 U.S.C. 151. Further, a record may be disclosed, subject to the limitations of 37 CFR 1.14, as a routine use, to the public if the record was filed in an application which became abandoned or in which the proceedings were terminated and which application is referenced by either a published application, an application open to public inspection or an issued patent.
9. A record from this system of records may be disclosed, as a routine use, to a Federal, State, or local law enforcement agency, if the USPTO becomes aware of a violation or potential violation of law or regulation.

UNITED STATES PATENT AND TRADEMARK OFFICE

UNITED STATES DEPARTMENT OF COMMERCE
United States Patent and Trademark Office
Address: COMMISSIONER FOR PATENTS
P.O. Box 1450
Alexandria, Virginia 22313-1450
www.uspto.gov

APPLICATION NO.	FILING DATE	FIRST NAMED INVENTOR	ATTORNEY DOCKET NO.	CONFIRMATION NO.
12/607,930	10/28/2009	Jeffrey H. Maxwell	12524.37.6.2	5487

22859 7590 06/15/2011
FREDRIKSON & BYRON, P.A.
INTELLECTUAL PROPERTY GROUP
200 SOUTH SIXTH STREET, SUITE 4000
MINNEAPOLIS, MN 55402

EXAMINER
JULES, FRANTZ F

ART UNIT	PAPER NUMBER
3784	

NOTIFICATION DATE	DELIVERY MODE
06/15/2011	ELECTRONIC

Please find below and/or attached an Office communication concerning this application or proceeding.

The time period for reply, if any, is set in the attached communication.

Notice of the Office communication was sent electronically on above-indicated "Notification Date" to the following e-mail address(es):

IP@FREDLAW.COM

UNITED STATES PATENT AND TRADEMARK OFFICE

Commissioner for Patents
United States Patent and Trademark Office
P.O. Box 1450
Alexandria, VA 22313-1450
www.uspto.gov

FREDRIKSON & BYRON, P.A.
INTELLECTUAL PROPERTY GROUP
200 SOUTH SIXTH STREET, SUITE 4000
MINNEAPOLIS MN 55402

In re Application of	:	
MAXWELL, JEFFREY H.	:	DECISION ON PETITION
Application No. 12/607930	:	TO MAKE SPECIAL UNDER
Filed: October 28, 2009	:	THE GREEN TECHNOLOGY
Attorney Docket No. 12524.37.6.2	:	PILOT PROGRAM

This is a decision on the renewed petition under 37 CFR 1.102, filed May 10, 2011, to make the above-identified application special under the pilot program for applications pertaining to Green Technologies as set forth in 74 Federal Register Notice 64666 (December 8, 2009) and amended by 75 Federal Register Notice 28554 (May 21, 2010) and 75 Federal Register Notice 69049 (November 10, 2010).

The petition is **denied as untimely**.

A grantable petition to make an application special under 37 CFR 1.102 and the pilot program as set forth in 74 FR 64666 must be directed to a nonprovisional application filed under 35 USC 111(a) or be a national stage entry under 35 USC 371, exclusive of any reissue applications.

If reconsideration of this decision is desired, a petition for reconsideration must be filed within ONE (1) MONTH OR THIRTY (30) DAYS from the mail date of this decision, whichever is longer. No extension of this time limit can be granted under 37 CFR 1.136(a) or (b). The petition for reconsideration should include an exhaustive attempt to provide the lacking item(s) noted below, since, after a decision on the petition for reconsideration, no further reconsideration or review of the matter will be undertaken by the Director.

In order to qualify for special status, the following requirements must be met. 1) The application must have no more than 3 independent claims and no more than 20 total claims. 2) The application must not contain any multiple dependent claims. 3) The petition must state the basis for seeking special status, i.e., the claimed invention either: A) materially enhances the quality of the environment or B) materially contributes to: i) the discovery or development of renewable

energy resources, ii) the more efficient utilization and conservation of energy resources, or iii) greenhouse gas emission reduction. 4) If the disclosure is not clear on its face that the claimed invention materially contributes under category (A) or (B), the petition must be accompanied by a statement by the applicant, assignee, or an attorney/agent registered to practice before the Office explaining how the materiality standard is met. 5) A statement that applicant will agree to make an election without traverse in a telephonic interview if a restriction requirement is made by the examiner. 6) The petition to make special must be filed electronically. 7) The petition must be filed at least one day prior to the date that a first Office Action appears in the Patent Application Information Retrieval (PAIR) system. 8) The petition must be accompanied by a request for early publication in compliance with 37 CFR 1.219 and include the publication fee as set forth in 37 CFR 1.18(d).

A review of the record shows that the instant renewed petition was filed more than thirty days from the previous dismissal decision. As the petition was not timely filed, the requested special status will not be granted.

Under the circumstances, the request to make the above-identified application special under the pilot program for applications pertaining to Green Technologies cannot be granted.

Telephone inquiries concerning this decision should be directed to Henry C. Yuen at 571-272-4856. The application is being forwarded to the Technology Center Art Unit 3744 for action in its regular turn.

Since this is a decision for reconsideration, no further reconsideration or review of the matter will be undertaken by the Director.

/Henry C. Yuen/

Henry C. Yuen
Quality Assurance Specialist
Technology Center TC 3700

UNITED STATES PATENT AND TRADEMARK OFFICE

Commissioner for Patents
United States Patent and Trademark Office
P.O. Box 1450
Alexandria, VA 22313-1450
www.uspto.gov

MOSAID TECHNOLOGIES INCORPORATED
11 HINES ROAD
Suite 203
Ottawa ON K2K-2X1 CA CANADA

MAILED
SEP 09 2011
OFFICE OF PETITIONS

In re Application of	:	
William Michael Pitts	:	
Application No. 12/607969	:	ON PETITION
Filing Date: 10/28/2009	:	
Attorney Docket Number:	:	
5650-16US-0C6-00	:	

This is a decision on the petition under the unintentional provisions of 37 CFR 1.137(b), filed August 25, 2011, to revive the above-identified application.

The petition is **GRANTED**.

The application became abandoned for failure to timely file a reply within the meaning of 37 CFR 1.113 to the final Office action of January 26, 2011. The proposed reply required for consideration of a petition to revive must be a Notice of Appeal (and appeal fee required by 37 CFR 41.20(b)(2), an amendment that *prima facie* places the application in condition for allowance, a Request for Continued Examination and submission (37 CFR 1.114), or the filing of a continuing application under 37 CFR 1.53(b). See MPEP 711.03(c)(III)(A)(2). Accordingly, the date of abandonment of this application is April 27, 2011.

The petition satisfies the requirements of 37 CFR 1.137(b) in that petitioner has supplied (1) the reply in the form of a Request for Continued Examination (RCE) and fee (and the submission required by 37 CFR 1.114); (2) the petition fee; and (3) a proper statement of unintentional delay.

It is noted that Applicant filed a three (3) month extension of time with the petition. Applicant is advised that an extension of time is only available to extend the period to reply to an Office action during the extendable period. Once the reply period, including the maximum extendable period, has lapsed, the application becomes abandoned (as of the day after the reply was due). No extensions of time are available.

Applicant may request a refund of the extension of time fee by writing to the Office of Finance, Refund Section. A copy of this Decision should be included with the request.

Telephone inquiries concerning this decision should be directed to the undersigned at (571) 272-3232.

This application is being referred to Technology Center AU 2111 for processing of the RCE and for appropriate action on the amendment by the Examiner in the normal course of business.

/DLW/

Derek L. Woods
Attorney
Office of Petitions

UNITED STATES PATENT AND TRADEMARK OFFICE

Commissioner for Patents
United States Patent and Trademark Office
P.O. Box 1450
Alexandria, VA 22313-1450
www.uspto.gov

Decision Date : November 1,2011

In re Application of :

Jeffery Foley

Application No : 12608073

Filed : 29-Oct-2009

Attorney Docket No : FJT100A US

DECISION ON REQUEST TO WITHDRAW AS ATTORNEY/AGENTOF RECORD

This is an electronic decision on the Request to Withdraw as attorney or agent of record under 37 CFR § 1.36(b), filed November 1,2011

The request is **APPROVED.**

The request was signed by Remy J. VanOphem (registration no. 27053) on behalf of all attorneys/agents associated with Customer Number 21133 . All attorneys/agents associated with Cusotmer Number 21133 have been withdrawn.

Since there are no remaining attorneys of record, all future communications from the Office will be directed to the first named inventor or assignee that has properly made itself of record pursuant to 37 CFR 3.71, with correspondence address:

Name	Jeffery T. Foley
Name2	
Address 1	47915 Lamplighter Trail
Address 2	
City	Macomb Township
State	MI
Postal Code	48044
Country	US

As a reminder, requester is required to inform the first named inventor or assignee that has properly made itself of record pursuant to 37 CFR 3.71 of the electronically processed petition.

Telephone inquiries concerning this decision should be directed to the Patent Electronic Business Center (EBC) at 866-217-9197.

Office of Petitions

Doc Code: PET.AUTO **Document Description: Petition automatically granted by EFS-Web**	PTO/SB/83 U.S. Patent and Trademark Office Department of Commerce

Electronic Petition Request	**REQUEST FOR WITHDRAWAL AS ATTORNEY OR AGENT AND CHANGE OF CORRESPONDENCE ADDRESS**
Application Number	12608073
Filing Date	29-Oct-2009
First Named Inventor	Jeffery Foley
Art Unit	3782
Examiner Name	JOHN COGILL
Attorney Docket Number	FJT100A US
Title	HOCKEY STICKS TRANSPORT CARRIER FOR A VEHICLE

◉ Please withdraw me as attorney or agent for the above identified patent application and the practitioners of record associated with Customer Number: 21133

The reason(s) for this request are those described in 37 CFR:

10.40(b)(4)

Certifications

☒ I/We have given reasonable notice to the client, prior to the expiration of the response period, that the practitioner(s) intend to withdraw from employment

☒ I/We have delivered to the client or a duly authorized representative of the client all papers and property (including funds) to which the client is entitled

☒ I/We have notified the client of any responses that may be due and the time frame within which the client must respond

Change the correspondence address and direct all future correspondence to the first named inventor or assignee that has properly made itself of record pursuant to 37 CFR 3.71:

Name	Jeffery T. Foley
Address	47915 Lamplighter Trail
City	Macomb Township
State	MI
Postal Code	48044
Country	US

I am authorized to sign on behalf of myself and all withdrawing practitioners.	
Signature	/Remy J. VanOphem/
Name	Remy J. VanOphem
Registration Number	27053

UNITED STATES PATENT AND TRADEMARK OFFICE

Commissioner for Patents
United States Patent and Trademark Office
P.O. Box 1450
Alexandria, VA 22313-1450
www.uspto.gov

MAILED

SEP 22 2011

OFFICE OF PETITIONS

WOLF GREENFIELD & SACKS, P.C.
600 ATLANTIC AVENUE
BOSTON, MA 02210-2206

Applicant: Eric T. Fossel
Appl. No.: 12/608,169
Filing Date: October 29, 2009
Title: TOPICAL DELIVERY OF L-ARGININE TO CAUSE BENEFICIAL EFFECTS
Attorney Docket: S1509.70029OS02
Pub. No.: US 2010/0316749 A1
Pub. Date: December 16, 2010

This is a decision on the request for a corrected patent application publication under 37 CFR 1.221(b), received on January 7, 2011, for the above-identified application.

The request is DISMISSED.

Applicant requests that the application be republished because the patent application publication contains material errors wherein the preliminary amendment filed with the application on October 29, 2009 was not included in the publication.

37 CFR 1.221 (b) is applicable "only when the Office makes a material mistake which is apparent from Office records.... Any request for a corrected publication or revised patent application publication other than provided as provided in paragraph (a) of this section must be filed within two months from the date of the patent application publication. This period is not extendable." A material mistake must affect the public's ability to appreciate the technical disclosure of the patent application publication, to determine the scope of the patent application publication, or to determine the scope of the provisional rights that an applicant may seek to enforce upon issuance of a patent. [1]

The error noted by requestor with respect to the preliminary amendment is <u>not</u> an Office error. The patent application publication does not include a mistake regarding the failure to include the preliminary amendment to the specification because patent application publications are not required to include preliminary amendments. See 37 CFR 1.215(a). The "failure to include an amendment is not an Office error." See MPEP 1130(b). The publication accurately reflected the specification as filed.

[1] <u>Changes to Implement Eighteen-Month Publication of Patent Applications</u>, 65 FR 57023, 57038 (Sept. 20, 2000), 1239, <u>Off. Gaz. Pat. Office Notices</u> 63, 75 (Oct. 10, 2000) (final rule).

Since 1997, the Office has encouraged applicants to file patent applications under 35 U.S.C. 111(a), especially continuation and divisional applications, without preliminary amendments by including any desired changes as part of the specification and drawings of the new application. In order to have a patent application publication of a continuation or divisional application contain only a desired set of claims, rather than the set of claims in the prior application, the Office strongly recommended that the continuation or divisional application be filed under 37 CFR 1.53(b) with a new specification containing only the desired set of claims.

Applicant is reminded of his duty to conduct a reasonable inquiry before filing a paper before the Office. See MPEP 410.

Applicants' request for a corrected patent application publication on January 7, 2011, may constitute a "failure to engage in reasonable efforts to conclude processing or examination of the application." See 1.704(c). This determination will be made on or after a mailing of a Notice of Allowance.

The applicant is advised that a "request for republication of an application previously published" may be filed under 37 CFR 1.221 (a). Such a request for republication "must include a copy of the application compliance with the Office's electronic filing system requirements and be accompanied by the publication fee set forth in § 1.18 (d) and the processing fee set forth in § 1.17 (i)." If the request for republication does not comply with the electronic filing system requirements, the republication will not take place and the publication fee set forth in § 1.18 (d) will be refunded. The processing fee will be retained.

A guide for filing a request for a Pre-Grant Publication, such as a request for republication, may be found on the link below:

http://www.uspto.gov/patents/process/file/efs/guidance/index.jsp
OR
http://www.uspto.gov/ebc/portal/efs/pgpub_quickstart.pdf

Any request for republication under 37 CFR 1.221(a), must be submitted via the EFS system, as a "Pre-Grant Publication".

Inquiries relating to this matter may be directed to Mark Polutta at (571) 272-7709.

Mark Polutta
Senior Legal Advisor
Office of Patent Legal Administration
Office of the Deputy Commissioner
for Patent Examination Policy

UNITED STATES PATENT AND TRADEMARK OFFICE

UNITED STATES DEPARTMENT OF COMMERCE
United States Patent and Trademark Office
Address: COMMISSIONER FOR PATENTS
P.O. Box 1450
Alexandria, Virginia 22313-1450
www.uspto.gov

APPLICATION NO.	FILING DATE	FIRST NAMED INVENTOR	ATTORNEY DOCKET NO.	CONFIRMATION NO.
12/608,194	10/29/2009	Isao SAKAMA	ISO-7299	6005

7590 11/29/2011
MATTINGLY & MALUR, PC
1800 DIAGONAL ROAD
SUITE 370
ALEXANDRIA, VA 22314

EXAMINER
LY, TOAN C

ART UNIT	PAPER NUMBER
2887	

MAIL DATE	DELIVERY MODE
11/29/2011	PAPER

DECISION GRANTING PETITION UNDER 37 CFR 1.138(d)

The declaration of express abandonment is recognized

This is in response to the petition under 37 CFR 1.138(d), requesting for a refund of any previously paid search fee and excess claims fee in the above-identified application.

The petition is granted.

The express abandonment is recognized. Any previously paid search fee and excess claims fee are hereby refunded.

Telephone inquiries should be directed to the Office of Data Management at (571) 272-4200.

Nimi Fasnes

Patent Publication Branch
Office of Data Management

FORM PET651G (Rev. 08/07)

UNITED STATES PATENT AND TRADEMARK OFFICE

Commissioner for Patents
United States Patent and Trademark Office
P.O. Box 1450
Alexandria, VA 22313-1450
www.uspto.gov

MORGAN LEWIS & BOCKIUS LLP/RAMBUS INC.
2 PALO ALTO SQUARE
3000 EL CAMINO REAL, SUITE 700
PALO ALTO, CA 94306

MAILED
JAN 3 1 2011
OFFICE OF PETITIONS

In re Application of :
Ely K Tsern, et al. :
Application No.: 12/608,209 : ON PETITION
Filed: October 29, 2009 :
Attorney Docket No.: 060809-5222US :

This is a decision on the petition, filed January 26, 2011, under 37 CFR 1.313(c)(2) to withdraw the above-identified application from issue after payment of the issue fee.

The petition is **GRANTED**.

The above-identified application is withdrawn from issue for consideration of a submission under 37 CFR 1.114 (request for continued examination). See 37 CFR 1.313(c)(2).

Petitioner is advised that the issue fee paid on December 20, 2010, cannot be refunded. If, however, this application is again allowed, petitioner may request that it be applied towards the issue fee required by the new Notice of Allowance.[1]

Telephone inquiries relating to this decision should be directed to the undersigned at (571) 272-3204.

The application is being referred to Technology Center AU 2824 for further processing of the request for continued examination under 37 CFR 1.114 and for consideration of the concurrently filed Information Disclosure Statement (IDS).

/SDB/

Sherry D. Brinkley
Petitions Examiner
Office of Petitions

[1] *The request to apply the issue fee to the new Notice may be satisfied by completing and returning the new Part B – Fee(s) Transmittal Form (along with any balance due at the time of submission). Petitioner is advised that the Issue Fee Transmittal Form must be completed and timely submitted to avoid abandonment of the application.*

UNITED STATES PATENT AND TRADEMARK OFFICE

Commissioner for Patents
United States Patent and Trademark Office
P.O. Box 1450
Alexandria, VA 22313-1450
www.uspto.gov

LEE HONG DEGERMAN KANG & WAIMEY
660 S. FIGUEROA STREET
SUITE 2300
LOS ANGELES, CA 90017

MAILED

FEB 18 2011

OFFICE OF PETITIONS

In re Application of :
Hak Seong Kim et al :
Application No. 12/608,213 : ON PETITION
Filed: October 29, 2009 :
Attorney Docket No. METHOD FOR TRANSMITTING CONTROL SIGNAL USING EFFICIENT MULTIPLEXING

This is a decision on the petition, filed February 17, 2011 under 37 CFR 1.313(c)(2) to withdraw the above-identified application from issue after payment of the issue fee.

The petition is **GRANTED**.

The above-identified application is withdrawn from issue for consideration of a submission under 37 CFR 1.114 (request for continued examination). See 37 CFR 1.313(c)(2).

Petitioner is advised that the issue fee paid on February 10, 2011 in the above-identified application cannot be refunded. If, however, the above-identified application is again allowed, petitioner may request that it be applied towards the issue fee required by the new Notice of Allowance.[1]

Telephone inquiries should be directed to Irvin Dingle at (571) 272-3210.

This matter is being referred to Technology Center AU 2462 for processing of the request for continued examination under 37 CFR 1.114 and for consideration of the concurrently filed Information Disclosure Statement.

/Irvin Dingle/
Irvin Dingle
Petitions Examiner
Office of Petitions

---

[1] The request to apply the issue fee to the new Notice may be satisfied by completing and returning the new Issue Fee Transmittal Form PTOL-85(b), which includes the following language thereon: Commissioner for Patents is requested to apply the Issue Fee and Publication Fee (if any) or re-apply any previously paid issue fee to the application identified above. Petitioner is advised that, whether a fee is indicated as being due or not, the Issue Fee Transmittal Form **must** be completed and timely submitted to avoid abandonment. Note the language in bold text on the first page of the Notice of Allowance and Fee(s) Due (PTOL-85).

UNITED STATES PATENT AND TRADEMARK OFFICE

UNITED STATES DEPARTMENT OF COMMERCE
United States Patent and Trademark Office
Address: COMMISSIONER FOR PATENTS
P.O. Box 1450
Alexandria, Virginia 22313-1450
www.uspto.gov

APPLICATION NO.	FILING DATE	FIRST NAMED INVENTOR	ATTORNEY DOCKET NO.	CONFIRMATION NO.
12/608,325	10/29/2009	Yoshiaki YAMADA	SE-US045267A	6254

7590 06/21/2011
GLOBAL IP COUNSELORS, LLP
1233 20TH STREET, NW, SUITE 700
WASHINGTON, DC 20036-2680

EXAMINER
NORTON, NADINE GEORGIANNA

ART UNIT	PAPER NUMBER
1713	

MAIL DATE	DELIVERY MODE
06/21/2011	PAPER

DECISION GRANTING PETITION UNDER 37 CFR 1.138(d)

The declaration of express abandonment is recognized

This is in response to the petition under 37 CFR 1.138(d), requesting for a refund of any previously paid search fee and excess claims fee in the above-identified application.

The petition is granted.

The express abandonment is recognized. Any previously paid search fee and excess claims fee are hereby refunded.

Telephone inquiries should be directed to the Office of Data Management at (571) 272-4200.

Nimi James

Patent Publication Branch
Office of Data Management

FORM PET651G (Rev. 08/07)

UNITED STATES PATENT AND TRADEMARK OFFICE

Commissioner for Patents
United States Patent and Trademark Office
P.O. Box 1450
Alexandria, VA 22313-1450
www.uspto.gov

MAILED

FEB 22 2012

OFFICE OF PETITIONS

SIEMENS CORPORATION
SANDRA BAKER
170 WOOD AVENUE SOUTH
ISELIN NJ 08830

In re Application of	:	
SHORE	:	
Application No. 12/608,338	:	DECISION ON PETITION
Filed: October 29, 2009	:	TO MAKE SPECIAL UNDER
Attorney Docket No. 2009P19047US;D-1308	:	37 CFR 1.102(c)(1)
	:	

This is a decision on the petition under 37 CFR 1.102(c)(1), filed January 30, 2012, to make the above-identified application special based on applicant's age as set forth in M.P.E.P. § 708.02, Section IV.

The petition is **DISMISSED**.

A grantable petition to make an application special under 37 CFR 1.102(c)(1) and MPEP § 708.02, Section IV: Applicant's Age, must be accompanied by evidence showing that at least one of the applicants is 65 years of age, or more, such as a birth certificate or a statement by applicant. No fee is required.

The statement submitted by the attorney on January 30, 2012, does not appear to include a proper S-signature. In this regard, the signature of Attorney Seyed Kaveh E. Rashidi-Yazd cannot be accepted because the Office is unable to determine if the attorney's name includes a second single slash mark after the S-signature. See 37 CFR 1.4(d)(2). Any future submissions should include a proper signature.

Petitioner/applicant is cautioned to avoid submitting personal information in documents filed in a patent application that may contribute to identity theft. Personal information such as social security numbers, bank account numbers, or credit card numbers (other than a check or credit card authorization form PTO-2038 submitted for payment purposes) is never required by the USPTO to support a petition or an application. If this type of personal information is included in documents submitted to the USPTO, petitioners/applicants should consider redacting such personal information from the documents before submitting them to the USPTO. Petitioner/applicant is advised that the record of a patent application is available to the public after publication of the application (unless a non-publication request in compliance with 37 CFR 1.213(a) is made in the application) or issuance of a patent. Furthermore, the record from an abandoned application may also be available to the public if the application is referenced in a published application or an issued patent (see 37 CFR 1.14).

Further correspondence with respect to this matter should be addressed as follows:

By Mail: Mail Stop PETITION
Commissioner for Patents

P. O. Box 1450
Alexandria, VA 22313-1450

By hand: U. S. Patent and Trademark Office
Customer Service Window, Mail Stop Petitions
Randolph Building
401 Dulany Street
Alexandria, VA 22314

By FAX: (571) 273-8300

Telephone inquiries concerning this decision should be directed to the undersigned at (571) 272-6735.

All other inquiries concerning the examination or status of the application is accessible in the PAIR system at http://www.uspto.gov/ebc.index.html.

The application is being referred to Technology Center 3725 for processing in its regular turn.

/Diane Goodwyn/
Diane Goodwyn
Petitions Examiner
Office of Petitions

UNITED STATES PATENT AND TRADEMARK OFFICE

Commissioner for Patents
United States Patent and Trademark Office
P.O. Box 1450
Alexandria, VA 22313-1450
www.uspto.gov

WOODCOCK WASHBURN LLP
CIRA CENTRE, 12TH FLOOR
2929 ARCH STREET
PHILADELPHIA PA 19104-2891

MAILED

AUG 2 6 2010

OFFICE OF PETITIONS

In re Application of	:	
Marija Drndic et al.	:	
Application No. 12/608,348	:	DECISION ON PETITION
Filed: October 29, 2009	:	
Attorney Docket No. **UPNA-0136 / R3741**	:	

This is a decision on the petition under 37 CFR 1.182, filed, July 26, 2010, to change the name of inventor "Sandra R. Selmic" to – Sandra Zivanovic --.

The petition is **GRANTED**.

Office records have been updated to reflect the inventor's change of name. A corrected Filing Receipt, which reflects the inventor's change of name, accompanies this decision on petition.

As authorized, the $400 fee for the petition under 37 CFR 1.182 has been assessed to petitioner's deposit account.

Any questions concerning this matter may be directed to JoAnne Burke at (571) 272-4584. Any questions concerning the examination procedures or status of the application should be directed to the Technology Center.

This application is being referred to the Technology Center Art Unit 1796 for the normal course of business.

JoAnne Burke
Petitions Examiner
Office of Petitions

ATTACHMENT: Corrected Filing Receipt

UNITED STATES PATENT AND TRADEMARK OFFICE

UNITED STATES DEPARTMENT OF COMMERCE
United States Patent and Trademark Office
Address: COMMISSIONER FOR PATENTS
P.O. Box 1450
Alexandria, Virginia 22313-1450
www.uspto.gov

APPLICATION NUMBER	FILING or 371(c) DATE	GRP ART UNIT	FIL FEE REC'D	ATTY.DOCKET.NO	TOT CLAIMS	IND CLAIMS
12/608,348	10/29/2009	1796	462	UPNA-0136 / R3741	18	1

CONFIRMATION NO. 6300

CORRECTED FILING RECEIPT

23377
WOODCOCK WASHBURN LLP
CIRA CENTRE, 12TH FLOOR
2929 ARCH STREET
PHILADELPHIA, PA 19104-2891

OC000000043228742

Date Mailed: 08/26/2010

Receipt is acknowledged of this non-provisional patent application. The application will be taken up for examination in due course. Applicant will be notified as to the results of the examination. Any correspondence concerning the application must include the following identification information: the U.S. APPLICATION NUMBER, FILING DATE, NAME OF APPLICANT, and TITLE OF INVENTION. Fees transmitted by check or draft are subject to collection. Please verify the accuracy of the data presented on this receipt. **If an error is noted on this Filing Receipt, please submit a written request for a Filing Receipt Correction. Please provide a copy of this Filing Receipt with the changes noted thereon. If you received a "Notice to File Missing Parts" for this application, please submit any corrections to this Filing Receipt with your reply to the Notice. When the USPTO processes the reply to the Notice, the USPTO will generate another Filing Receipt incorporating the requested corrections**

Applicant(s)

Marija Drndic, Philadelphia, PA;
Sandra Zivanovic, Ruston, LA;
Difei Qi, Ruston, LA;

Assignment For Published Patent Application

THE TRUSTEES OF THE UNIVERSITY OF PENNSYLVANIA, Philadelphia, PA
LOUISIANA TECH UNIVERSITY FOUNDATION, INC., Ruston, LA

Power of Attorney: The patent practitioners associated with Customer Number 23377

Domestic Priority data as claimed by applicant

This application is a DIV of 11/348,039 02/06/2006
which claims benefit of 60/650,476 02/07/2005
and claims benefit of 60/667,935 04/04/2005

Foreign Applications

If Required, Foreign Filing License Granted: 08/25/2010

The country code and number of your priority application, to be used for filing abroad under the Paris Convention, is **US 12/608,348**

Projected Publication Date: Not Applicable

Non-Publication Request: No

Early Publication Request: No
**** SMALL ENTITY ****

Title

POLYMER-NANOCRYSTAL QUANTUM DOT COMPOSITES AND OPTOELECTRONIC DEVICES

Preliminary Class

252

PROTECTING YOUR INVENTION OUTSIDE THE UNITED STATES

Since the rights granted by a U.S. patent extend only throughout the territory of the United States and have no effect in a foreign country, an inventor who wishes patent protection in another country must apply for a patent in a specific country or in regional patent offices. Applicants may wish to consider the filing of an international application under the Patent Cooperation Treaty (PCT). An international (PCT) application generally has the same effect as a regular national patent application in each PCT-member country. The PCT process **simplifies** the filing of patent applications on the same invention in member countries, but **does not result** in a grant of "an international patent" and does not eliminate the need of applicants to file additional documents and fees in countries where patent protection is desired.

Almost every country has its own patent law, and a person desiring a patent in a particular country must make an application for patent in that country in accordance with its particular laws. Since the laws of many countries differ in various respects from the patent law of the United States, applicants are advised to seek guidance from specific foreign countries to ensure that patent rights are not lost prematurely.

Applicants also are advised that in the case of inventions made in the United States, the Director of the USPTO must issue a license before applicants can apply for a patent in a foreign country. The filing of a U.S. patent application serves as a request for a foreign filing license. The application's filing receipt contains further information and guidance as to the status of applicant's license for foreign filing.

Applicants may wish to consult the USPTO booklet, "General Information Concerning Patents" (specifically, the section entitled "Treaties and Foreign Patents") for more information on timeframes and deadlines for filing foreign patent applications. The guide is available either by contacting the USPTO Contact Center at 800-786-9199, or it can be viewed on the USPTO website at http://www.uspto.gov/web/offices/pac/doc/general/index.html.

For information on preventing theft of your intellectual property (patents, trademarks and copyrights), you may wish to consult the U.S. Government website, http://www.stopfakes.gov. Part of a Department of Commerce initiative, this website includes self-help "toolkits" giving innovators guidance on how to protect intellectual property in specific countries such as China, Korea and Mexico. For questions regarding patent enforcement issues, applicants may call the U.S. Government hotline at 1-866-999-HALT (1-866-999-4158).

LICENSE FOR FOREIGN FILING UNDER

Title 35, United States Code, Section 184

Title 37, Code of Federal Regulations, 5.11 & 5.15

GRANTED

The applicant has been granted a license under 35 U.S.C. 184, if the phrase "IF REQUIRED, FOREIGN FILING LICENSE GRANTED" followed by a date appears on this form. Such licenses are issued in all applications where the conditions for issuance of a license have been met, regardless of whether or not a license may be required as

set forth in 37 CFR 5.15. The scope and limitations of this license are set forth in 37 CFR 5.15(a) unless an earlier license has been issued under 37 CFR 5.15(b). The license is subject to revocation upon written notification. The date indicated is the effective date of the license, unless an earlier license of similar scope has been granted under 37 CFR 5.13 or 5.14.

This license is to be retained by the licensee and may be used at any time on or after the effective date thereof unless it is revoked. This license is automatically transferred to any related applications(s) filed under 37 CFR 1.53(d). This license is not retroactive.

The grant of a license does not in any way lessen the responsibility of a licensee for the security of the subject matter as imposed by any Government contract or the provisions of existing laws relating to espionage and the national security or the export of technical data. Licensees should apprise themselves of current regulations especially with respect to certain countries, of other agencies, particularly the Office of Defense Trade Controls, Department of State (with respect to Arms, Munitions and Implements of War (22 CFR 121-128)); the Bureau of Industry and Security, Department of Commerce (15 CFR parts 730-774); the Office of Foreign AssetsControl, Department of Treasury (31 CFR Parts 500+) and the Department of Energy.

NOT GRANTED

No license under 35 U.S.C. 184 has been granted at this time, if the phrase "IF REQUIRED, FOREIGN FILING LICENSE GRANTED" DOES NOT appear on this form. Applicant may still petition for a license under 37 CFR 5.12, if a license is desired before the expiration of 6 months from the filing date of the application. If 6 months has lapsed from the filing date of this application and the licensee has not received any indication of a secrecy order under 35 U.S.C. 181, the licensee may foreign file the application pursuant to 37 CFR 5.15(b).

PTO/SB/20PCT-EP (05-10)
Approved for use through 01/31/2012. OMB 0651-0058
U.S. Patent and Trademark Office, U. S. DEPARTMENT OF COMMERCE
Under the Paperwork Reduction Act of 1995, no persons are required to respond to a collection of information unless it displays a valid OMB control number.

REQUEST FOR PARTICIPATION IN THE PATENT COOPERATION TREATY - PATENT PROSECUTION HIGHWAY (PCT-PPH) PILOT PROGRAM BETWEEN THE EUROPEAN PATENT OFFICE (EPO) AND THE USPTO

Application No:	12/608,366	Filing date:	October 29, 2009
First Named Inventor:	Stefan Schmatloch		
Title of the Invention:	LOW ENERGY SURFACE BONDING SYSTEM CONTAINING A PRIMER WITH LONG OPEN TIME		

THIS REQUEST FOR PARTICIPATION IN THE PCT-PPH PILOT PROGRAM ALONG WITH THE REQUIRED DOCUMENTS MUST BE SUBMITTED VIA EFS-WEB. INFORMATION REGARDING EFS-WEB IS AVAILABLE AT HTTP://WWW.USPTO.GOV/EBC/EFS_HELP.HTML

APPLICANT HEREBY REQUESTS PARTICIPATION IN THE PCT-PPH PROGRAM AND PETITIONS TO MAKE THE ABOVE-IDENTIFIED APPLICATION SPECIAL UNDER THE PCT-PPH PROGRAM.

The above-identified application is (1) a national stage entry of the corresponding PCT application, or (2) a national stage entry of another PCT application which claims priority to the corresponding PCT application, or (3) a national application that claims domestic/ foreign priority to the corresponding PCT application, or (4) a national application which forms the basis for the priority claim in the corresponding PCT application, or (5) a continuing application of a U.S. application that satisfies one of (1) to (4) above, or (6) a U.S. application that claims domestic benefit to a U.S. provisional application which forms the basis for the priority claim in the corresponding PCT application.

The corresponding PCT application number(s) is/are: PCT/US2009/062498

The international filing date of the corresponding PCT application(s) is/are: October 29, 2009

I. List of Required Documents:

a. **A copy of the latest international work product (WO/ISA, WO/IPEA, or IPER) in the above-identified corresponding PCT application(s)**

- [x] Is attached
- [ ] Is not attached because the document is already in the U.S. application.

b. **A copy of all claims which were indicated as having novelty, inventive step and industrial applicability in the above-identified corresponding PCT application(s).**

- [x] Is attached.
- [ ] Is not attached because the document is already in the U.S. application.

c. **English translations of the documents in a. and b. above are attached (if the documents are not in the English language). A statement that the English translation is accurate is attached for the document in b. above.**

This collection of information is required by 35 U.S.C. 119, 37 CFR 1.55, and 37 CFR 1.102(d). The information is required to obtain or retain a benefit by the public, which is to file (and by the USPTO to process) an application. Confidentiality is governed by 35 U.S.C. 122 and 37 CFR 1.11 and 1.14. This collection is estimated to take 2 hours to complete, including gathering, preparing, and submitting the completed application form to the USPTO. Time will vary depending upon the individual case. Any comments on the amount of time you require to complete this form and/or suggestions for reducing this burden should be sent to the Chief Information Officer, U.S. Patent and Trademark Office, U.S. Department of Commerce, P.O. Box 1450, Alexandria, VA 22313-1450. DO NOT SEND FEES OR COMPLETED FORMS TO THIS ADDRESS.

Approved for use through 01/31/2012. OMB 0651-0058
U.S. Patent and Trademark Office; U.S. DEPARTMENT OF COMMERCE

Under the Paperwork Reduction Act of 1995, no persons are required to respond to a collection of information unless it displays a valid OMB control number.

REQUEST FOR PARTICIPATION IN THE PCT-PPH PILOT PROGRAM BETWEEN THE EPO AND THE USPTO

(continued)

Application No.:	12/608,366
First Named Inventor:	Stefan Schmatloch

d. **(1) An information disclosure statement listing the documents cited in the international work products (ISR, WO/ISA, WO/IPEA, IPER) of the corresponding PCT application.**

☐ Is attached

☒ Has already been filed in the above-identified U.S. application on May 5, 2011

(2) Copies of all documents (except) for U.S. patents or U.S. patent application publications)

☐ Are attached.

☒ Have already been filed in the above-identified U.S. application on May 5, 2011

II. Claims Correspondence Table:

Claims in US Application	Patentable Claims in the corresponding PCT Application	Explanation regarding the correspondence
1	1	WO2008/134,110 (US7,955,702) is commonly owned. Applicable to all claims.
2	2	
3	3	
4	4	
5	5	
6	6	
7	7	
8	8	
9	9	
10	10	
11	11	
12	12	
13	13	
14	14	
15	15	
16	16	
17	17	
18	18	
19 and 20	19 and 20	

III. All the claims in the US application sufficiently correspond to the patentable claims in the corresponding PCT application.

Signature	Date June 14, 2011
Name (Print/Typed) Norman L. Sims	Registration Number 30685

PATENT COOPERATION TREATY

PCT/US2009/062498

COPY PCT

From the INTERNATIONAL BUREAU

NOTIFICATION CONCERNING TRANSMITTAL OF COPY OF INTERNATIONAL PRELIMINARY REPORT ON PATENTABILITY (CHAPTER I OF THE PATENT COOPERATION TREATY)
(PCT Rule 44bis.1(c))

To:

SIMS, Norman, L.
Dobrusin & Thennisch PC
29 W. Lawrence Street, Suite 210
Pontiac, MI 48342
ETATS-UNIS D'AMERIQUE

Date of mailing *(day/month/year)*
12 May 2011 (12.05.2011)

Applicant's or agent's file reference
67997-WO-PCT 1040-115 WO

IMPORTANT NOTICE

International application No.	International filing date *(day/month/year)*	Priority date *(day/month/year)*
PCT/US2009/062498	29 October 2009 (29.10.2009)	29 October 2008 (29.10.2008)

Applicant
DOW GLOBAL TECHNOLOGIES LLC et al

The International Bureau transmits herewith a copy of the international preliminary report on patentability (Chapter I of the Patent Cooperation Treaty)

Received
MAY 25 2011
Dobrusin & Thennisch, P.C.

The International Bureau of WIPO
34, chemin des Colombettes
1211 Geneva 20, Switzerland

Facsimile No. +41 22 338 82 70

Authorized officer
Dorothée Mülhausen

e-mail: pt01.pct@wipo.int

Form PCT/IB/326 (January 2004)

PATENT COOPERATION TREATY

PCT

INTERNATIONAL PRELIMINARY REPORT ON PATENTABILITY

(Chapter I of the Patent Cooperation Treaty)

(PCT Rule 44*bis*)

Applicant's or agent's file reference 67997-WO-PCT	**FOR FURTHER ACTION**	See item 4 below
International application No. PCT/US2009/062498	International filing date *(day/month/year)* 29 October 2009 (29.10.2009)	Priority date *(day/month/year)* 29 October 2008 (29.10.2008)
International Patent Classification (8th edition unless older edition indicated) See relevant information in Form PCT/ISA/237		
Applicant DOW GLOBAL TECHNOLOGIES LLC		

1. This international preliminary report on patentability (Chapter I) is issued by the International Bureau on behalf of the International Searching Authority under Rule 44 *bis*.1(a).

2. This REPORT consists of a total of 5 sheets, including this cover sheet.

   In the attached sheets, any reference to the written opinion of the International Searching Authority should be read as a reference to the international preliminary report on patentability (Chapter I) instead.

3. This report contains indications relating to the following items:

☒	Box No. I	Basis of the report
☐	Box No. II	Priority
☐	Box No. III	Non-establishment of opinion with regard to novelty, inventive step and industrial applicability
☐	Box No. IV	Lack of unity of invention
☒	Box No. V	Reasoned statement under Article 35(2) with regard to novelty, inventive step or industrial applicability; citations and explanations supporting such statement
☒	Box No. VI	Certain documents cited
☐	Box No. VII	Certain defects in the international application
☐	Box No. VIII	Certain observations on the international application

4. The International Bureau will communicate this report to designated Offices in accordance with Rules 44*bis*.3(c) and 93*bis*.1 but not, except where the applicant makes an express request under Article 23(2), before the expiration of 30 months from the priority date (Rule 44*bis*.2).

	Date of issuance of this report 03 May 2011 (03.05.2011)
The International Bureau of WIPO 34, chemin des Colombettes 1211 Geneva 20, Switzerland Facsimile No. +41 22 338 82 70	Authorized officer Dorothée Mülhausen e-mail: pt01.pct@wipo.int

PATENT COOPERATION TREATY

From the
INTERNATIONAL SEARCHING AUTHORITY

To:

see form PCT/ISA/220

PCT

WRITTEN OPINION OF THE INTERNATIONAL SEARCHING AUTHORITY

(PCT Rule 43*bis*.1)

Date of mailing
(day/month/year) see form PCT/ISA/210 (second sheet)

Applicant's or agent's file reference
see form PCT/ISA/220

FOR FURTHER ACTION
See paragraph 2 below

International application No.	International filing date *(day/month/year)*	Priority date *(day/month/year)*
PCT/US2009/062498	29.10.2009	29.10.2008

International Patent Classification (IPC) or both national classification and IPC
INV. C09D5/00 C08G18/12 C08G18/28 C08G18/77

Applicant
DOW GLOBAL TECHNOLOGIES, INC.

1. This opinion contains indications relating to the following items:

- ☒ Box No. I Basis of the opinion
- ☐ Box No. II Priority
- ☐ Box No. III Non-establishment of opinion with regard to novelty, inventive step and industrial applicability
- ☐ Box No. IV Lack of unity of invention
- ☒ Box No. V Reasoned statement under Rule 43*bis*.1(a)(i) with regard to novelty, inventive step or industrial applicability; citations and explanations supporting such statement
- ☒ Box No. VI Certain documents cited
- ☐ Box No. VII Certain defects in the international application
- ☐ Box No. VIII Certain observations on the international application

2. **FURTHER ACTION**

If a demand for international preliminary examination is made, this opinion will usually be considered to be a written opinion of the International Preliminary Examining Authority ("IPEA") except that this does not apply where the applicant chooses an Authority other than this one to be the IPEA and the chosen IPEA has notifed the International Bureau under Rule 66.1*bis*(b) that written opinions of this International Searching Authority will not be so considered.

If this opinion is, as provided above, considered to be a written opinion of the IPEA, the applicant is invited to submit to the IPEA a written reply together, where appropriate, with amendments, before the expiration of 3 months from the date of mailing of Form PCT/ISA/220 or before the expiration of 22 months from the priority date, whichever expires later.

For further options, see Form PCT/ISA/220.

3. For further details, see notes to Form PCT/ISA/220.

Name and mailing address of the ISA:	Date of completion of this opinion	Authorized Officer
European Patent Office D-80298 Munich Tel. +49 89 2399 - 0 Fax: +49 89 2399 - 4465	see form PCT/ISA/210	Krätzschmar, Ulrike Telephone No. +49 89 2399-2137

WRITTEN OPINION OF THE INTERNATIONAL SEARCHING AUTHORITY

International application No.
PCT/US2009/062498

Box No. I Basis of the opinion

1. With regard to the **language**, this opinion has been established on the basis of:

   ☒ the international application in the language in which it was filed

   ☐ a translation of the international application into , which is the language of a translation furnished for the purposes of international search (Rules 12.3(a) and 23.1 (b)).

2. ☐ This opinion has been established taking into account the **rectification of an obvious mistake** authorized by or notified to this Authority under Rule 91 (Rule 43bis.1(a))

3. With regard to any **nucleotide and/or amino acid sequence** disclosed in the international application and necessary to the claimed invention, this opinion has been established on the basis of:

   a. type of material:

   ☐ a sequence listing

   ☐ table(s) related to the sequence listing

   b. format of material:

   ☐ on paper

   ☐ in electronic form

   c. time of filing/furnishing:

   ☐ contained in the international application as filed.

   ☐ filed together with the international application in electronic form.

   ☐ furnished subsequently to this Authority for the purposes of search.

4. ☐ In addition, in the case that more than one version or copy of a sequence listing and/or table relating thereto has been filed or furnished, the required statements that the information in the subsequent or additional copies is identical to that in the application as filed or does not go beyond the application as filed, as appropriate, were furnished.

5. Additional comments:

Box No. V Reasoned statement under Rule 43*bis*.1(a)(i) with regard to novelty, inventive step or industrial applicability; citations and explanations supporting such statement

1. Statement

Novelty (N)	Yes:	Claims	1-20
	No:	Claims	
Inventive step (IS)	Yes:	Claims	1-20
	No:	Claims	
Industrial applicability (IA)	Yes:	Claims	1-20
	No:	Claims	

2. Citations and explanations

see separate sheet

Box No. VI Certain documents cited

1. Certain published documents (Rules 43*bis*.1 and 70.10)

and / or

2. Non-written disclosures (Rules 43*bis*.1 and 70.9)

see form 210

Ad section V. :

Document US-A-4 367 313 (D1) discloses a coating composition comprising a polyisocyanate prepolymer containing alkoxysilane groups and a component having a plurality of oxazolidine groups (see examples 1-15 and claims 1-15). D1, however, does not disclose the specific combination of an aliphatic based prepolymer a) and an aromatic polyisocyanate b) as described in present claim 1. The subject-matter of claims 1-20 is therefore novel over D1 (Art. 33(2) PCT).

Inventive step according to Art. 33(3) PCT is also acknowledged. D1 does not suggest that the specific combination of compounds a) to c) according to claim 1 results in long open times of up to 3 months (see table 6 in the application).

Ad section VI.:

Certain published documents

Application No Patent No	Publication date *(day/month/year)*	Filing date *(day/month/year)*	Priority date *(valid claim)* *(day/month/year)*
WO2008/134110	06.11.2008	19.02.2008	24.04.2007

The above-mentioned document D2 is considered to be novelty destroying for the subject-matter of claims 1-20.

WHAT IS CLAIMED IS:

1. A composition comprising

a) one or more prepolymers having on average three or more aliphatic isocyanate groups and further containing alkoxysilane groups;

b) one or more aromatic polyisocyanates;

c) one or more compounds having at least one heterocyclic ring which hydrolyzes when exposed to moisture to form at least one isocyanate reactive group;

d) one or more solvents;

e) one or more amine or organometallic polyurethane catalysts;

wherein the ratio of aromatic isocyanate groups to aliphatic isocyanate groups is from about 0.5:1.0 to about 1.5:1.0 and the equivalent ratio of isocyanate groups to isocyanate reactive groups derivable from the one or more compounds having at least one hydrolyzable heterocylic ring is from about 0.8:1.0 to about 5.3:1.0.

2. A composition according to Claim 1 wherein the ratio of aromatic isocyanate groups to aliphatic isocyanate groups is from about 0.9:1.0 to about 1.5:1.0 and the equivalent ratio of isocyanate groups to isocyanate reactive groups derivable from the one or more compounds having at least one hydrolyzable heterocylic ring is from about 1.5:1.0 to about 1.7:1.0.

3. A composition according to Claim 1 or 2 wherein the composition further comprises a film forming resin.

4. A composition according to any one of Claims 1 to 3 wherein b) the one or more aromatic polyisocyanates comprises one or more of polyisocyanates, polymeric polyisocyanates, or adducts of polyisocyanates with compounds having two or more isocyanate reactive groups.

5. A composition according to any one of Claims 1 to 4 wherein b) the one or more aromatic polyisocyanates comprises i) one or more of polyisocyanates or polymeric polyisocyanates and ii) one or more adducts of polyisocyanates with compounds having one or more isocyanate reactive groups which further contain alkoxysilane groups.

6. A composition according to Claim 4 wherein the one or more adducts of polyisocyanates with compounds having one or more isocyanate reactive groups comprise the reaction product of a phosphorus containing polyisocyanate and an aminoalkylsilane containing one or more isocyanate reactive groups.

7. A composition according to any one of Claims 1 to 6 wherein the one or more compounds having at least one heterocyclic ring which hydrolyzes when exposed to moisture comprises one or more compounds containing one of more of azole groups.

8. A composition according to any one of Claims 1 to 7 wherein the one or more compounds having at least one heterocyclic ring which hydrolyzes when exposed to moisture comprises one or more compounds containing one of more of oxazolidine groups.

9. A composition according to any one of Claims 1 to 7 wherein the one or more compounds having at least one heterocyclic ring which hydrolyzes when exposed to moisture comprises one or more compounds containing one or more bis oxazolidine groups.

10. A composition according to any one of Claims 1 to 9 wherein the weight percentage of alkoxy silane groups in the composition is from about 1.0 to about 10 percent by weight based on the weight of composition.

11. A composition according to any one of Claims 1 to 10 wherein the composition further comprises one or more reinforcing fillers.

12. A composition according to any one of Claims 1 to 11 which comprises

a) from about 1 to 90 percent by weight of one or more prepolymers having on average three or more aliphatic isocyanate groups and further containing alkoxysilane groups;
b) from about 1 to about 30 percent by weight of one or more aromatic polyisocyanates;
c) from about 1 to about 10 percent by weight of one or more compounds having at least one heterocyclic ring which hydrolyzes

when exposed to moisture to form at least one isocyanate reactive group;

d) from about 35 to about 85 percent by weight of one or more solvents;

e) from about 0.01 to about 5 percent by weight of one or more amine or organometallic polyurethane catalysts;

f) from about 0 to about 8 percent by weight of one or more film forming resins;

g) from about 0 to about 20 percent by weight of one or more pigments;

wherein the percentages are based on the total weight of the composition.

13. A composition according to Claim 12 wherein component b) comprises i) from about 3 to about 15 percent by weight of i) one or more comprises one or more of polyisocyanates or polymeric polyisocyanates and from about 1 to about 7 percent by weight of ii) one or more adducts of polyisocyanates with compounds having two or more isocyanate reactive groups which further contain alkoxysilane groups.

14. A system for bonding two substrates together which comprises a composition according to any one of Claims 1 to 13 and an adhesive having one or more functional groups selected from acrylic, methacrylic, isocyanate, siloxy or mixtures thereof .

15. A method of priming a surface to enhance the bond of a polyisocyanate functional adhesive to the surface which comprises contacting a composition according to any one of Claims 1 to 13 with the surface and allowing the solvent to evaporate.

16. A method of bonding two substrates together which comprises

a) applying a composition according to any one of Claims 1 to 13 to the surface of one or more of the substrates and allowing the solvent to evaporate away;

b) applying an isocyanate functional adhesive to the surfaces of the two or more substrates to which the composition was applied according to step a);

c) contacting the two or more substrates together with the adhesive disposed between the substrates; and

d) allowing the adhesive to cure so as to bond the two or more substrates together.

17. A method according to Claim 15 or 16 wherein the time between the application of the primer and application of the adhesive is from about 20 second to about 1 year.

18. A method according to any one of Claims 15 to 17 wherein after step a) one or more of the substrates are moved to another location for performance of step b).

19. An article comprising a substrate having deposited thereon the composition of Claims 1 to 13.

20. An article comprising a substrate having deposited thereon the composition of Claims 1 to 13 without the solvent.

UNITED STATES PATENT AND TRADEMARK OFFICE

UNITED STATES DEPARTMENT OF COMMERCE
United States Patent and Trademark Office
Address: COMMISSIONER FOR PATENTS
P.O. Box 1450
Alexandria, Virginia 22313-1450
www.uspto.gov

APPLICATION NO.	FILING DATE	FIRST NAMED INVENTOR	ATTORNEY DOCKET NO.	CONFIRMATION NO.
12/608,366	10/29/2009	Stefan Schmatloch	67997-US-NP (1062-115)	6336

109 7590 08/10/2011
The Dow Chemical Company
P.O. BOX 1967
2040 Dow Center
Midland, MI 48641

EXAMINER
NILAND, PATRICK DENNIS

ART UNIT	PAPER NUMBER
1762	

NOTIFICATION DATE	DELIVERY MODE
08/10/2011	ELECTRONIC

Please find below and/or attached an Office communication concerning this application or proceeding.

The time period for reply, if any, is set in the attached communication.

Notice of the Office communication was sent electronically on above-indicated "Notification Date" to the following e-mail address(es):

FFUIMPC@dow.com

UNITED STATES PATENT AND TRADEMARK OFFICE

Commissioner for Patents
United States Patent and Trademark Office
P.O. Box 1450
Alexandria, VA 22313-1450
www.uspto.gov

EL

August 9, 2011

In re application of SCHMATLOCH, STEFAN Serial No. 12/608,366 Filed: October 29, 2009 For: **LOW ENERGY SURFACE BONDING SYSTEM CONTAINING A PRIMER WITH LONG OPEN TIME**	: : : : : :	DECISION ON REQUEST TO PARTICIPATE IN PATENT PROSECUTION HIGHWAY PROGRAM AND PETITION TO MAKE SPECIAL UNDER 37 CFR 1.102(a)

This is a decision on the request for reconsideration to participate in the PCT Patent Prosecution Highway (PCT-PPH) pilot program and the petition under 37 CFR 1.102(a), filed June 14, 2011, to make the above-identified application special.

The request and petition are **GRANTED**.

A grantable request to participate in the PCT-PPH pilot program and petition to make special require:

(1) The U.S. application must disclose an eligible relationship to one or more PCT applications where the ISA or IPEA are the JPO, EPO, or USPTO;

(2) At least one claim in the PCT application has novelty, inventive step, and industrial applicability and must be free of any observations in Box VIII in the latest work product in the international stage or applicant must identify and explain why the claim(s) is/are not subject to the observation in Box VIII;

(3) Applicant must submit a copy of the claim(s) from the PCT application(s) that have novelty, inventive step, and industrial applicability along with an English translation thereof and a statement that the English translation is accurate, if the claims are not in the English language;

(4) All the claims in the U.S. application must sufficiently correspond or be amended to sufficiently correspond to the claim(s) that have novelty, inventive step, and industrial applicability in the PCT application(s);

(5) Examination of the U.S. application has not begun;

(6) Applicant must submit a copy of the latest international work product from the PCT application indicating that the claim(s) have novelty, inventive step, and industrial applicability along with an English translation thereof if the latest international work

product is not in the English language; and

(7) Applicant must submit an IDS listing the documents cited by the PCT examiner in the international work product along with copies of documents except U.S. patents or U.S. patent application publications.

The request to participate in the PPH program and petition comply with the above requirements. Accordingly, the above-identified application has been accorded "special" status.

The application is being forwarded to the examiner for action on the merits commensurate with this decision.

Any inquiry regarding this decision should be directed to Emily M. Le, Supervisory Patent Examiner at (571) 272-0903.

All other inquiries concerning the examination or status of the application is accessible in the PAIR system at http://www.uspto.gov/ebc/index.html.

/Emily M. Le/

Emily M. Le
Supervisory Patent Examiner
Technology Center 1700

UNITED STATES PATENT AND TRADEMARK OFFICE

UNITED STATES DEPARTMENT OF COMMERCE
United States Patent and Trademark Office
Address: COMMISSIONER FOR PATENTS
P.O. Box 1450
Alexandria, Virginia 22313-1450
www.uspto.gov

APPLICATION NO.	FILING DATE	FIRST NAMED INVENTOR	ATTORNEY DOCKET NO.	CONFIRMATION NO.
12/608,403	10/29/2009	Yoshiaki YAMADA	SE-US045267B	6396

7590 06/21/2011
GLOBAL IP COUNSELORS, LLP
1233 20TH STREET, NW, SUITE 700
WASHINGTON, DC 20036-2680

EXAMINER
MCPHERSON, JOHN A

ART UNIT	PAPER NUMBER
1721	

MAIL DATE	DELIVERY MODE
06/21/2011	PAPER

DECISION DISMISSING PETITION UNDER 37 CFR 1.138(d)

The declaration of express abandonment will not be recognized

This is in response to the petition under 37 CFR 1.138(d), requesting for a refund of any previously paid search fee and excess claims fee in the above-identified application.

The petition is dismissed.

The express abandonment will **not** be recognized for the reason(s) indicated below:

1. ☑ The petition was not filed in sufficient time to permit the appropriate officials to recognize the abandonment before an examination has been made of the application. See 37 CFR 1.138(d).

2. ☐ The petition was not signed by a party authorized by 37 CFR 1.33(b)(1), (3) or (4).

3. ☐ The application is not an application filed under 35 U.S.C. 111(a) on or after December 8, 2004.

4. ☐ The petition for express abandonment under 1.138(d) is dismissed because the applicant did not pay any search fee and excess claims fees in the above-identified application.

Telephone inquiries should be directed to the Office of Data Management at (571) 272-4200.

Nimi Farmer

Patent Publication Branch
Office of Data Management

FORM PET651D (Rev. 08/07)

Doc Code: PET.GREEN
Document Description: Petition for Green Tech Pilot

PTO/SB/420 (11-10)
Approved for use through 01/31/2011. OMB 0651-0062
U.S. Patent and Trademark Office; U. S. DEPARTMENT OF COMMERCE
Under the Paperwork Reduction Act of 1995, no persons are required to respond to a collection of information unless it displays a valid OMB control number.

PETITION TO MAKE SPECIAL UNDER THE GREEN TECHNOLOGY PILOT PROGRAM

Attorney Docket Number: ZR243-09001	Application Number (if known): 12608473	Filing date: 2009-10-29
First Named Inventor: Mark Isaacs		
Title: Geosolar Temperature Control Construction and Method Thereof		

APPLICANT HEREBY REQUESTS TO PARTICIPATE IN THE GREEN TECHNOLOGY PILOT PROGRAM FOR THE ABOVE-IDENTIFIED APPLICATION. See Instruction Sheet on page 2.

This petition must be timely filed electronically using the USPTO electronic filing system, EFS-Web.

1. By filing this petition:

   Applicant is requesting early publication: Applicant hereby requests early publication under 37 CFR 1.219 and the publication fee set forth in 37 CFR 1.18(d) accompanies this request.

2. By filing this petition: applicant is agreeing to make an election without traverse in a telephonic interview and elect an invention that meets the eligibility requirements for the Green Technology Pilot Program, if the Office determines that the claims are not obviously directed to a single invention. See Instruction Sheet.

3. This request is accompanied by statements of special status for the eligibility requirement.

4. The application contains no more than three (3) independent claims and twenty (20) total claims.

5. The application does not contain any multiple dependent claims.

6. Other attachments: _____

Signature /James E. Cole/	Date 2010-12-15
Name (Print/Typed) James E. Cole	Registration Number 50530

Note: *Signatures of all the inventors or assignees of record of the entire interest or their representative(s) are required in accordance with 37 CFR 1.33 and 11.18. Please see 37 CFR 1.4(d) for the form of the signature. If necessary, submit multiple forms for more than one signature see below*.*

☐ *Total of ..... forms are submitted.

The information is required to obtain or retain a benefit by the public which is to file (and by the USPTO to process) an application. Confidentiality is governed by 35 U.S.C. 122 and 37 CFR 1.11 and 1.14. This collection is estimated to take 12 hours to complete, including gathering, preparing, and submitting the completed application form to the USPTO. Time will vary depending upon the individual case. Any comments on the amount of time you require to complete this form and/or suggestions for reducing this burden, should be sent to the Chief Information Officer, U.S. Patent and Trademark Office, U.S. Department of Commerce, P.O. Box 1450, Alexandria, VA 22313-1450. DO NOT SEND FEES OR COMPLETED FORMS TO THIS ADDRESS. **SEND TO: Commissioner for Patents, P.O. Box 1450, Alexandria, VA 22313-1450.**

If you need assistance in completing the form, call 1-800-PTO-9199 and select option 2.

IN THE UNITED STATES PATENT AND TRADEMARK OFFICE

In re application of:	)	Attorney Ref.: ZR243-09001
	)	
Inventor: Mark Isaacs	)	Examiner: TBD
	)	
Application No.: 12/608,473	)	Group Art Unit: 3744
	)	
Filed: October 29, 2009	)	Confirmation No.: 6517
	)	
For: Geosolar Temperature Control Construction and Method Thereof	)	Date Submitted: December 15, 2010

Mail Stop PETITIONS
Commissioner for Patents
PO Box 1450
Alexandria, VA 22313-1450

STATEMENT OF SPECIAL STATUS FOR THE ELIGIBILITY REQUIREMENT

Special status is sought for this application because the claimed invention materially contributes to the more efficient utilization and conservation of energy resources. For example, the claimed invention may provide for a reduction of energy consumption by construction structures methods taught herein. The claimed invention may also lead to a reduction in greenhouse gas production and usage of fossil fuels.

Applicant hereby requests early publication in compliance with 37 CFR 1.219 and provides the publication fee herewith set forth in 37 CFR 1.18(d).

Respectfully submitted,

MIDDLETON REUTLINGER

Date: December 15, 2010

/ James E. Cole /
James E. Cole
Registration No. 50,530

401 South Fourth Street
2600 Brown & Williamson Tower
Louisville, KY 40202

(502) 625-2746 direct phone
(502) 561-0442 fax
jcole@middreut.com

UNITED STATES PATENT AND TRADEMARK OFFICE

UNITED STATES DEPARTMENT OF COMMERCE
United States Patent and Trademark Office
Address: COMMISSIONER FOR PATENTS
P.O. Box 1450
Alexandria, Virginia 22313-1450
www.uspto.gov

APPLICATION NO.	FILING DATE	FIRST NAMED INVENTOR	ATTORNEY DOCKET NO.	CONFIRMATION NO.
12/608,473	10/29/2009	Mark Isaacs	ZR243-09001	6517

22884 7590 01/05/2011
MIDDLETON & REUTLINGER
2500 BROWN & WILLIAMSON TOWER
(401 S. 4th Street, Suite 2500)
LOUISVILLE, KY 40202

EXAMINER

ART UNIT	PAPER NUMBER
3744	

NOTIFICATION DATE	DELIVERY MODE
01/05/2011	ELECTRONIC

Please find below and/or attached an Office communication concerning this application or proceeding.

The time period for reply, if any, is set in the attached communication.

Notice of the Office communication was sent electronically on above-indicated "Notification Date" to the following e-mail address(es):

USPTOmail@MiddReut.com

UNITED STATES PATENT AND TRADEMARK OFFICE

Commissioner for Patents
United States Patent and Trademark Office
P.O. Box 1450
Alexandria, VA 22313-1450
www.uspto.gov

MIDDLETON & REUTLINGER
2500 BROWN & WILLIAMSON TOWER
(401 S. 4th Street, Suite 2500)
LOUISVILLE KY 40202

In re Application of	:	
ISAACS, MARK	:	DECISION ON PETITION
Application No. 12/608,4730	:	TO MAKE SPECIAL UNDER
Filed: Oct. 29, 2009	:	THE GREEN TECHNOLOGY
Attorney Docket No. ZR243-09001	:	PILOT PROGRAM

This is a decision on the petition under 37 CFR 1.102, filed Dec. 15, 2010, to make the above-identified application special under the pilot program for applications pertaining to Green Technologies as set forth in 74 Federal Register Notice 64666 (December 8, 2009) and amended by 75 Federal Register Notice 28554 (May 21, 2010) and 75 Federal Register Notice 69049 (November 10, 2010).

The petition is **granted.**

If reconsideration of this decision is desired, a petition for reconsideration must be filed within ONE (1) MONTH OR THIRTY (30) DAYS from the mail date of this decision, whichever is longer. No extension of this time limit can be granted under 37 CFR 1.136(a) or (b). The petition for reconsideration should include an exhaustive attempt to provide the lacking item(s) noted below, since, after a decision on the petition for reconsideration, no further reconsideration or review of the matter will be undertaken by the Director.

A grantable petition to make an application special under 37 CFR 1.102 and the pilot program as set forth in 74 FR 64666 must be directed to a nonprovisional application filed under 35 USC 111(a) or be a national stage entry under 35 USC 371, exclusive of any reissue applications.

In order to qualify for special status, the following requirements must be met. 1) The application must have no more than 3 independent claims and no more than 20 total claims. 2) The application must not contain any multiple dependent claims. 3) The petition must state the basis for seeking special status, i.e., the claimed invention either: A) materially enhances the quality of the environment or B) materially contributes to: i) the discovery or development of renewable energy resources, ii) the more efficient utilization and conservation of energy resources, or iii)

greenhouse gas emission reduction. 4) If the disclosure is not clear on its face that the claimed invention materially contributes under category (A) or (B), the petition must be accompanied by a statement by the applicant, assignee, or an attorney/agent registered to practice before the Office explaining how the materiality standard is met. 5) A statement that applicant will agree to make an election without traverse in a telephonic interview if a restriction requirement is made by the examiner. 6) The petition to make special must be filed electronically. 7) The petition must be filed at least one day prior to the date that a first Office Action appears in the Patent Application Information Retrieval (PAIR) system. 8) The petition must be accompanied by a request for early publication in compliance with 37 CFR 1.219 and include the publication fee as set forth in 37 CFR 1.18(d).

The requirement for a fee for consideration of the petition to make special for applications pertaining to Green Technologies has been waived.

The instant petition complies with items 1 – 8 above. Accordingly, the above-identified application has been accorded "special" status.

Telephone inquires concerning this decision should be directed to Henry C. Yuen at 571-272-4856.

This application will be forwarded to the Technology Center Art Unit 3744 for action on the merits commensurate with this decision.

/Henry C. Yuen/

Henry C. Yuen
Quality Assurance Specialist
Technology Center TC 3700

UNITED STATES PATENT AND TRADEMARK OFFICE

Commissioner for Patents
United States Patent and Trademark Office
P.O. Box 1450
Alexandria, VA 22313-1450
www.uspto.gov

PIETRAGALLO GORDON ALFANO BOSICK & RASPANTI, LLP
ONE OXFORD CENTRE, 38TH FLOOR
301 GRANT STREET
PITTSBURGH, PA 15219-6404

MAILED

DEC 01 2011

OFFICE OF PETITIONS

In re Application of Christ et al.	:	Decision on Request
Application No. 12/608,497	:	
Filing Date: October 29, 2009	:	
Attorney Docket No. NORT-86799	:	
Pub. No. US 2011/0106459 A1	:	
Pub. Date: May 5, 2011	:	

This is a decision on the request for a corrected patent application publication under 37 C.F.R. § 1.221(b) filed June 24, 2011.

The request is **dismissed**.

Applicants request the application be republished because the cover page of the patent application publication identifies the assignee as "Northrop Grumman Corporation" instead of "Northrop Grumman Systems Corporation."

37 C.F.R. § 1.221(b) states,

> [Relief under 37 C.F.R. § 1.221 is warranted] only when the Office makes a material mistake which is apparent from Office records..... Any request for corrected publication or revised patent application publication other than provided in paragraph (a) of this section must be filed within two months from the date of the patent application publication. This period is not extendable.

A mistake is only a "material" mistake if the mistake affects the public's ability to appreciate the technical disclosure of the patent application publication, determine the scope of the patent application publication, or determine the scope of the provisional rights that an applicant may seek to enforce upon issuance of a patent.[1]

[1] *See* Changes to Implement Eighteen-Month Publication of Patent Applications; Final Rule, 65 Fed. Reg. 57023, 57038 (Sept. 20, 2000), 1239 Off. Gaz. Pat. Office 63, 75 (Oct. 10, 2000). *See also* Section 1130 of the Manual of Patent Examining Procedure (8th ed., Rev. 8, July 2010).

The mistake identified in the instant request is not a material mistake as required under 37 C.F.R. § 1.221(b). Specifically, the mistake does not affect the public's ability to appreciate the technical disclosure of the patent application publication, determine the scope of the patent application publication, or determine the scope of the provisional rights that an applicant may seek to enforce upon issuance of a patent. *See* MPEP §§ 1121 ("Errors in assignee information printed on the publication are not considered material mistakes by the Office.").

The mistake identified in the instant request is not an Office mistake. Specifically, the application data sheet filed October 29, 2009, identifies the assignee as "Northrop Grumman Corporation."

Applicants are advised that a "request for republication of an application previously published" may be filed under 37 C.F.R. § 1.221(a). The request must include a copy of the application, which complies with the Office's electronic filing system requirements set forth in 37 C.F.R. § 1.18(d), and the required processing fee set forth in 37 C.F.R. § 1.17(i).

If the request for republication does not comply with the electronic filing system requirements, the republication will not take place and the publication fee set forth in 37 C.F.R. § 1.18(d) will be refunded. However, the processing fee will be retained.

Guidance for filing a request for a Pre-Grant Publication, such as a request for republication, may be found at the links below:

http://www.uspto.gov/patents/process/file/efs/guidance/index.jsp

http://www.uspto.gov/ebc/portal/efs/pgpub_quickstart.pdf

Any request for republication under 37 C.F.R. § 1.221(a), must be submitted via the EFS system as a "Pre-Grant Publication" and questions or any request for reconsideration of the instant decision should be addressed as follows:

By mail to: Mail Stop PGPUB
Commissioner for Patents
P.O. Box 1450
Alexandria, Va. 22313-1450

Telephone inquiries regarding this communication should be directed to Senior Petitions Attorney Steven Brantley at (571) 272-3203.

Christopher Bottorff

Christopher Bottorff
Petitions Examiner
Office of Petitions

UNITED STATES PATENT AND TRADEMARK OFFICE

Commissioner for Patents
United States Patent and Trademark Office
P.O. Box 1450
Alexandria, VA 22313-1450
www.uspto.gov

SPRINKLE IP LAW GROUP
1301 W. 25TH STREET
SUITE 408
AUSTIN TX 78705

MAILED
JUN 24 2011
OFFICE OF PETITIONS

In re Application of	:	
Scarpelli et al.	:	DECISION ON PETITION
Application No. 12/608,601	:	TO WITHDRAW
Filed: October 29, 2009	:	FROM RECORD
Attorney Docket No. BMC1200-1	:	

This is a decision on the Request to Withdraw as attorney or agent of record under 37 C.F.R. § 1.36(b), filed May 20, 2011.

The request is **NOT APPROVED**.

The Request for Withdrawal as Attorney or Agent and Change of Correspondence Address submitted on May 20, 2011 is hereby not accepted. Petitioner has not complied with current USPTO requirements, as set forth in 37 CFR 10.40 concerning Request for Withdrawal as Attorney and Change of Correspondence Address (form PTO/SB/83). Specifically, pursuant to 37 CFR 10.40, the Office will require the practitioner(s) to certify that he, she or they have:

(1) given reasonable notice to the client, prior to the expiration of the reply period, that the practitioner(s) intends to withdraw from employment;

(2) delivered to the client or a duly authorized representative of the client all papers and property (including funds) to which the client is entitled; and

(3) notified the client of any replies that may be due and the time frame within which the client must respond.

Petitioner has not complied with the above certifications. It is suggested that petitioner submit a properly completed PTO/SB/83 (form enclosed), which provides a section wherein practitioners may certify the completion of the above-listed activities necessary for the request to withdraw from representation to be granted.

Further, the Office will only accept correspondence address changes to the most current address information provided for the assignee of the entire interest *who properly became*

of record under 37 CFR 3.71, or, if no assignee of the entire interest has properly been made of record, the most current address information provided for the first named inventor. 37 CFR 3.71(c) states:

An assignee becomes of record either in a national patent application or a reexamination proceeding by filing a statement in compliance with § 3.73(b) that is signed by a party who is authorized to act on behalf of the assignee.

According to a review of current USPTO records petitioner has not requested the address be changed to a properly recorded assignee or the first listed inventor. CPA Global is neither the first named inventor nor the assignee who properly became of record under 37 CFR 3.71. Further, currently there is no Statement under 37 CFR 3.73(b) of record in the instant application. As such, all future communications from the Office will continue to be directed to the above-listed address until otherwise notified by applicant.

Currently, there is no outstanding Office action mailed that requires a reply.

Telephone inquires concerning this decision should be directed to the undersigned at (571) 272-7751.

/Joan Olszewski/
Joan Olszewski
Petitions Examiner
Office of Petitions

Enclosure: PTO/SB/83

UNITED STATES PATENT AND TRADEMARK OFFICE

UNITED STATES DEPARTMENT OF COMMERCE
United States Patent and Trademark Office
Address: COMMISSIONER FOR PATENTS
P.O. Box 1450
Alexandria, Virginia 22313-1450
www.uspto.gov

APPLICATION NO.	FILING DATE	FIRST NAMED INVENTOR	ATTORNEY DOCKET NO.	CONFIRMATION NO.
12/608,612	10/29/2009	Kimihisa Oka	6639P813	6786

7590 08/31/2010
BLAKELY SOKOLOFF TAYLOR & ZAFMAN LLP
1279 OAKMEAD PARKWAY
SUNNYVALE, CA 94085-4040

EXAMINER
OMETZ, DAVID LOUIS

ART UNIT	PAPER NUMBER
2622	

MAIL DATE	DELIVERY MODE
08/31/2010	PAPER

DECISION GRANTING PETITION UNDER 37 CFR 1.138(d)

The declaration of express abandonment is recognized

This is in response to the petition under 37 CFR 1.138(d), requesting for a refund of any previously paid search fee and excess claims fee in the above-identified application.

The petition is granted.

The express abandonment is recognized. Any previously paid search fee and excess claims fee are hereby refunded.

Telephone inquiries should be directed to the Office of Data Management at (571) 272-4200.

Betty Powell

Patent Publication Branch
Office of Data Management

FORM PET651G (Rev. 08/07)

UNITED STATES PATENT AND TRADEMARK OFFICE

UNITED STATES DEPARTMENT OF COMMERCE
United States Patent and Trademark Office
Address: COMMISSIONER FOR PATENTS
P.O. Box 1450
Alexandria, Virginia 22313-1450
www.uspto.gov

APPLICATION NO.	FILING DATE	FIRST NAMED INVENTOR	ATTORNEY DOCKET NO.	CONFIRMATION NO.
12/608,665	10/29/2009	Shuji Yamazaki	6639P816	6890

8791 7590 03/28/2011
BLAKELY SOKOLOFF TAYLOR & ZAFMAN LLP
1279 OAKMEAD PARKWAY
SUNNYVALE, CA 94085-4040

EXAMINER
CHANKONG, DOHM

ART UNIT	PAPER NUMBER
2452	

MAIL DATE	DELIVERY MODE
03/28/2011	PAPER

Please find below and/or attached an Office communication concerning this application or proceeding.

The time period for reply, if any, is set in the attached communication.

UNITED STATES PATENT AND TRADEMARK OFFICE

Commissioner for Patents
United States Patent and Trademark Office
P.O. Box 1450
Alexandria, VA 22313-1450
www.uspto.gov

BLAKELY SOKOLOFF TAYLOR &
ZAFMAN LLP
1279 OAKMEAD PARKWAY
SUNNYVALE CA 94085-4040

In re Application of: Yamazaki et al.
Application No. 12/608,665
Filed: October 29, 2009
For: **COMMUNICATION SYSTEM AND TERMINAL REGISTRATION METHOD THEREOF, SERVER UNIT, AND TERMINAL DEVICE**

DECISION ON REQUEST TO PARTICIPATE IN PATENT PROSECUTION HIGHWAY PROGRAM AND PETITION TO MAKE SPECIAL UNDER 37 CFR 1.102(d)

MAILED

MAR 28 2011

DIRECTOR OFFICE
TECHNOLOGY CENTER 2400

This is a decision on the request to participate in the Patent Prosecution Highway (PPH) program and the renewed petition under 37 CFR 1.102(d), filed February 16, 2011, to make the above-identified application special.

The petition is **DISMISSED.**

A grantable request to participate in the PPH program and petition to make special require:

(1) The U.S. application is
(a) a Paris Convention application which either (i) validly claims priority under 35 U.S.C. 119(a) and 37 CFR 1.55 to one or more applications filed in the JPO, or (ii) validly claims priority to a PCT application that contains no priority claims, or
(b) a national stage application under the PCT (an application which entered the national stage in the U.S. from a PCT international application after compliance with 35 U.S.C. 371), which PCT application (i) validly claims priority to an application filed in the JPO, or (ii) validly claims priority to a PCT application that contains no priority claims, or (iii) contains no priority claim, or
(c) a so-called bypass application filed under 35 U.S.C. 111 (a) which validly claims benefit under 35 U.S.C. 120 to a PCT application, which PCT application (i) validly claims priority to an application filed in the JPO, or (ii) validly claims priority to a PCT application that contains no priority claims, or (iii) contains no priority claim.

Where the JPO application that contains the allowable/patentable claims is not the same application for which priority is claimed in the U.S. application, applicant must identify the relationship between the JPO application that contains the allowable/patentable claims and the JPO priority application claimed in the U.S. application;

(2) Applicant must submit a copy of:
a. The allowable/patentable claim(s) from the Japanese application(s);
b. An English translation of the allowable/patentable claim(s), if the claims were published in a language other than English); and
c. A statement that the English translation is accurate;

(3) Applicant must:
a. Ensure that all the claims in the U.S. application sufficiently correspond or be amended to sufficiently correspond to the allowable/patentable claim(s) in the JPO application(s) and
b. Submit a claim correspondence table in English;

(4) Examination of the U.S. application has not begun;

(5) Applicant must submit:
a. A copy of all the office action(s) (which are relevant to patentability), excluding "Decision to Grant a Patent" from each of the Japanese application(s) containing the allowable/patentable claim(s);
b. An English language translation of the JPO office action(s) (if the office action(s) are not in the English language); and
c. A statement that the English translation is accurate;

(6) Applicant must submit:
a. An IDS listing the documents cited by the JPO examiner in the JPO office action (unless already filed in this application); and
b. Copies of all the documents cited in the JPO office action, except U.S. patents or U.S. patent application publications (unless already filed in this application).

The request to participate in the PPH program and petition failed to meet the requirement of item (5c) above.

Regarding item (5c), petitioner did not provide one or more statements that the English translations of the Japanese Office Actions received 2/16/2011 are accurate.

Accordingly, the Petition is **DISMISSED**.

Applicant is given a time period of ONE MONTH or THIRTY DAYS, whichever is longer, to correct the deficiencies. NO EXTENSION OF TIME UNDER 37 CFR 1.136 IS PERMITTED.

If the deficiencies are not corrected with the time period given, the application will await action in its regular turn.

Responses must be submitted by EFS-Web using the document description "Petition to make special under Pat Pros Hwy".

Telephone inquiries concerning this decision should be directed to Christopher Grant at 571-272-7294.

All other inquiries concerning the examination or status of the application is accessible in the PAIR system at http://www.uspto.gov/ebc/index.html.

/Christopher Grant/

Christopher Grant
Quality Assurance Specialist
Technology Center 2400

UNITED STATES PATENT AND TRADEMARK OFFICE

UNITED STATES DEPARTMENT OF COMMERCE
United States Patent and Trademark Office
Address: COMMISSIONER FOR PATENTS
P.O. Box 1450
Alexandria, Virginia 22313-1450
www.uspto.gov

APPLICATION NO.	FILING DATE	FIRST NAMED INVENTOR	ATTORNEY DOCKET NO.	CONFIRMATION NO.
12/608,665	10/29/2009	Shuji Yamazaki	6639P816	6890

8791 7590 06/22/2011
BLAKELY SOKOLOFF TAYLOR & ZAFMAN LLP
1279 OAKMEAD PARKWAY
SUNNYVALE, CA 94085-4040

EXAMINER
NGUYEN, THU V

ART UNIT	PAPER NUMBER
2452	

MAIL DATE	DELIVERY MODE
06/22/2011	PAPER

Please find below and/or attached an Office communication concerning this application or proceeding.

The time period for reply, if any, is set in the attached communication.

UNITED STATES PATENT AND TRADEMARK OFFICE

MAILED

JUN 22 2011

DIRECTOR OFFICE
TECHNOLOGY CENTER 2400

Commissioner for Patents
United States Patent and Trademark Office
P.O. Box 1450
Alexandria, VA 22313-1450
www.uspto.gov

BLAKELY SOKOLOFF TAYLOR & ZAFMAN LLP
1279 OAKMEAD PARKWAY
SUNNYVALE CA 94085-4040

In re Application of: YAMAZAKI, SHUJI et al.
Application No. 12/608665
Filed: October 29, 2009
For: COMMUNICATION SYSTEM AND TERMINAL REGISTRATION METHOD THEREOF, SERVER UNIT, AND TERMINAL DEVICE

DECISION ON REQUEST TO PARTICIPATE IN PATENT PROSECUTION HIGHWAY PROGRAM AND PETITION TO MAKE SPECIAL UNDER 37 CFR 1.102(d)

This is a decision on the request to participate in the Patent Prosecution Highway (PPH) program and the petition under 37 CFR 1.102(d), filed April 28, 2011, to make the above-identified application special.

The petition is **GRANTED.**

A grantable request to participate in the PPH program and petition to make special require:

(1) The U.S. application must validly claim priority under 35 U.S.C. 119(a) to one or more applications filed in the JPO;

(2) Applicant must submit a copy of the allowable/patentable claim(s) from the JPO application(s) along with an English translation thereof and a statement that the English translation is accurate;

(3) All the claims in the U.S. application must sufficiently correspond or be amended to sufficiently correspond to the allowable/patentable claim(s) in the JPO application(s);

(4) Examination of the U.S. application has not begun;

(5) Applicant must submit a copy of all the office actions from each of the JPO application(s) containing the allowable/patentable claim(s) along with an English translation thereof and a statement that the English translation is accurate;

(6) Applicant must submit an IDS listing the documents cited by the JPO examiner in the JPO office action along with copies of documents except U.S. patents or U.S. patent application publications; and

(7) For petitions to make special filed with a PPH request *on or after* May 25, 2010, the USPTO has eliminated the fee. Petitions to make special filed with a PPH request **prior** *to* May 25, 2010 will be treated under 37 CFR 1.102(d) and the petition fee set forth in 37 CFR 1.17(h) **will** be required. (see Fed. Reg. vol. 75, No. 100, dated 05/25/10).

The request to participate in the PPH program and petition are found to comply with the above requirements. Accordingly, the above-identified application has been accorded "special" status.

Telephone inquiries concerning this decision should be directed to Aaron Strange at 571-272-3959.

All other inquiries concerning the examination or status of the application is accessible in the PAIR system at http://www.uspto.gov/ebc/index.html.

The application is being forwarded to the examiner for action on the merits commensurate with this decision

/Christopher Grant/
Christopher Grant
Quality Assurance Specialist
Technology Center 2400

UNITED STATES PATENT AND TRADEMARK OFFICE

Commissioner for Patents
United States Patent and Trademark Office
P.O. Box 1450
Alexandria, VA 22313-1450
www.uspto.gov

CHOATE, HALL & STEWART
CITRIX SYSTEMS, INC.
TWO INTERNATIONAL PLACE
BOSTON MA 02110

MAILED
NOV 22 2010
OFFICE OF PETITIONS

In re Application of	:	
KAMATH, Sandeep et al.	:	
Application No. 12/608,753	:	DECISION ON PETITION
Filed: October 29, 2009	:	TO WITHDRAW
Attorney Docket No. **2006579-1843 (CTX-376)**	:	FROM RECORD
	:	

This is a decision on the Request to Withdraw as attorney or agent of record under 37 C.F.R. § 1.36(b), filed November 10, 2010.

The request is **NOT APPROVED**.

The Office will no longer accept address changes to a new practitioner or law firm filed with a Request, absent the filing of a power of attorney to the new representative. The Office will either change the correspondence address of record to the most current address information provided for the assignee of the entire interest who properly became of record under 37 CFR 3.71 or, if no assignee of the entire interest has properly been made of record under 37 CFR 3.71, the most current address information provided for the first named inventor.

Accordingly, the request to withdraw from record cannot be approved because the request to change the correspondence address is not that of: (1) the first named inventor; or (2) an assignee of the entire interest under 37 C.F.R 3.71 who has properly intervened.

If an assignee has intervened in this application, then a Statement under 37 CFR 3.73(b) or a copy of the actual assignment must be submitted with a renewed request.

All future communications from the Office will continue to be directed to the above-listed address until otherwise notified by applicant.

Telephone inquiries concerning this decision should be directed to Tredelle Jackson at 571-272- 2783.

/Tredelle D. Jackson/
Paralegal Specialist
Office of Petitions

cc: **FOLEY & LARDNER LLP**
111 HUNTINGTON AVENUE
26TH FLOOR
BOSTON, MA 02199-7610

IN THE UNITED STATES PATENT AND TRADEMARK OFFICE

Application No.:	12/608779
Application Title:	*Touchscreen Electrode Configuration*
First Named Inventor:	Harald Philipp
Filing Date:	29 October 2009
Confirmation No.:	7095
Art Unit:	2629
Examiner:	Richard A. Hjerbe

Petition to Make Special Under 37 C.F.R. § 1.102

Applicant submits this Petition under 37 C.F.R. § 1.102 to have this Application accorded special status under the Extension of the Patent Application Backlog Reduction Stimulus Plan. Extension of the Patent Application Backlog Reduction Stimulus Plan, 75 Fed. Reg. 71,072 (Nov. 22, 2010). Under the conditions for being accorded special status under the Patent Application Backlog Reduction Stimulus Plan (*available at* http://www.uspto.gov/patents/init_events/brs_conditions.pdf):

a) Applicant seeks special status for this Application on the basis of the express abandonment of co-pending U.S. Patent Application No. 11/868563;

b) Applicant includes with this Petition a copy of the Declaration of Abandonment of U.S. Patent Application No. 11/868563;

c) The relationship between this Application and U.S. Patent Application No. 11/868563 that qualifies this Application for special status is this Application and U.S. Patent Application No. 11/868563 having a common assignee, Atmel Corporation;

d) Applicant is expressly abandoning U.S. Patent Application No. 11/868563;

e) Applicant certifies that Applicant has not filed petitions in more than 14 other applications requesting special status under this program; and

f) Applicant agrees to make an election without traverse in a telephonic interview if the Office determines that the claims of this Application to be made special are directed to two or more independent and distinct inventions.

Conclusion

Applicant respectfully petitions the Office to accord this Application special status. The Commissioner may charge any fee due and credit any overpayment for this Application to Deposit Account No. 02-0384 of Baker Botts L.L.P.

Respectfully submitted,

BAKER BOTTS L.L.P.
Attorneys for Applicant

Travis W. Thomas
Reg. No. 48,667

Date: 12 April 2011

Customer No. 12323

IN THE UNITED STATES PATENT AND TRADEMARK OFFICE

Application No.:	11/868563
Application Title:	*Touch Screen Element*
First Named Inventor:	Harald Philipp
Filing Date:	8 October 2007
Confirmation No.:	1327
Art Unit:	2835
Examiner:	Nidhi Desai

Declaration of Abandonment Under 37 C.F.R. § 1.138(a)

Applicant hereby expressly abandons this Application to have co-pending U.S. Patent Application No. 12/608779 accorded special status under the Extension of the Patent Application Backlog Reduction Stimulus Plan. Extension of the Patent Application Backlog Reduction Stimulus Plan, 75 Fed. Reg. 71,072 (Nov. 22, 2010). Under the conditions for being accorded special status under the Patent Application Backlog Reduction Stimulus Plan (*available at* http://www.uspto.gov/patents/init_events/brs_conditions.pdf), Applicant states:

a) Applicant has not and will not file an application that claims the benefit of U.S. Patent Application No. 11/868563 under any provision of Title 35 of the United States Code;

b) Applicant agrees not to request a refund of any fees paid in U.S. Patent Application No. 11/868563; and

c) Applicant has not filed and will not file a new application that claims the same invention claimed in U.S. Patent Application No. 11/868563 (with the phrase "same invention" having the same meaning as used in the context of statutory double-patenting under 35 U.S.C. § 101).

Respectfully submitted,

BAKER BOTTS L.L.P.
Attorneys for Applicant

Travis W. Thomas
Reg. No. 48,667

Date: 12 April 2011

Customer No. 12323

UNITED STATES PATENT AND TRADEMARK OFFICE

Commissioner for Patents
United States Patent and Trademark Office
P.O. Box 1450
Alexandria, VA 22313-1450
www.uspto.gov

Baker Botts L.L.P.
2001 Ross Avenue, 6th Floor
Dallas TX 75201

MAILED
APR 15 2011
OFFICE OF PETITIONS

In re Application of :
PHILIPP :
Application No. 12/608,779 :
Filed: October 29, 2009 :
Attorney Docket No. **080900.0142** :

DECISION ON PETITION
TO MAKE SPECIAL
37 CFR 1.102

This is a decision on the petition under 37 CFR 1.102, filed April 12, 2011, to make the above-identified application special under the Patent Application Backlog Reduction Stimulus Plan which is a pilot program set forth at 74 Federal Register Notice 62285 (November 27, 2009) and 75 Federal register Notice 36063 (June 24, 2010).

The petition is **DISMISSED**.

Any request for reconsideration of this decision should include a cover letter entitled "Renewed Petition under 37 CFR 1.102." This is **not** a final agency action within the meaning of 5 U.S.C. § 704.

A grantable petition to make an application special under 37 CFR 1.102 and the pilot program as set forth in 74 FR 62285 and 75 FR 36063 must be directed to a nonprovisional application filed prior to October 1, 2009.

The USPTO will accord special status for examination under Patent Application Backlog Reduction Stimulus Plan under the following conditions:

(1) The application for which special status is sought is a nonprovisional application that has an actual filing date earlier than October 1, 2009;

(2) The applicant has another copending nonprovisional application that has an actual filing date earlier than October 1, 2009, and is complete under 37 CFR 1.53;

(3) The application for which special status is sought and the other copending nonprovisional application either are owned by the same party as of October 1, 2009, or name at least one inventor in common;

(4) The applicant files a letter of express abandonment under 37 CFR 1.138(a) in the copending nonprovisional application before it has been taken up for examination and

a) includes a statement that the applicant has not and will not file a new application that claims the same invention claimed in the expressly abandoned application;

b) includes with the letter of express abandonment a statement that the applicant has not and will not file an application that claims the benefit of the expressly abandoned application under any provision of title 35, United States Code, and

c) includes a statement that the applicant agrees not to request a refund of any fees paid in the expressly abandoned application; and

(5) The applicant files a petition under 37 CFR 1.102 in the application for which special status is sought that

a) includes a specific identification of the relationship between the applications that qualifies the application for special status;

b) identifies, by application number if available, the application that is being expressly abandoned;

c) provides a statement certifying that applicant has not filed petitions in more than fourteen (14) other applications requesting special status under this program; and

d) provides a statement that applicant agrees to make an election without traverse in a telephonic interview if the Office determines that the claims of the application to be made special are directed to two or more independent and distinct inventions.

The requirement for a fee for consideration of the petition to make special for applications pertaining to Patent Application Backlog Reduction Stimulus Plan has been waived.

The petition lacks Item 1 above.

More specifically, the application, i.e., 12/816,900, for which special status is sought, does not have an actual filing date earlier than October 1, 2009 (Item 1). As such, the present petition to make special must be dismissed.

Further correspondence with respect to this matter should be addressed as follows:

By Mail: Mail Stop PETITION
Commissioner for Patents
P. O. Box 1450
Alexandria, VA 22313-1450

By hand: U. S. Patent and Trademark Office
Customer Service Window, Mail Stop Petitions
Randolph Building
401 Dulany Street
Alexandria, VA 22314

By FAX: (571) 273-8300

Telephone inquires concerning this decision should be directed to Brian W. Brown at 571-272-5338.

All other inquiries concerning either examination or status of the application should be directed to the Technology Center.

The application is being forwarded to the Technology Center Art Unit 2629 for action in its regular turn.

Brian W. Brown
Petitions Examiner
Office of Petitions

UNITED STATES PATENT AND TRADEMARK OFFICE

Commissioner for Patents
United States Patent and Trademark Office
P.O. Box 1450
Alexandria, VA 22313-1450
www.uspto.gov

STRASBURGER & PRICE, LLP
ATTN: IP SECTION
1401 MCKINNEY
SUITE 2200
HOUSTON, TX 77010

MAILED
JAN 20 2011
OFFICE OF PETITIONS

In re Application of :
Frank Stokes :
Application No. 12/608,790 : ON PETITION
Filed: October 29, 2009 :
Attorney Docket No.: 21526.0152 :

This is a decision in response to the petition, filed November 12, 2010, to revive the above-identified application under the provisions of 37 CFR 1.137(b).

The petition is **GRANTED**.

The application became abandoned on June 18, 2010 for a failure to file a complete reply to the Notice to File Missing Parts of Nonprovisional Application mailed November 17, 2009. A Notice of Abandonment was subsequently mailed on November 3, 2010. On November 12, 2010, the present petition was filed.

There is no indication that the person signing the instant petition was ever given a power of attorney or authorization of agent to prosecute the above-identified application. However, in accordance with 37 CFR 1.34(a), the signature of Jack Murchison appearing on the petition shall constitute a representation to the United States Patent and Trademark Office that he is authorized to represent the particular party on whose behalf he acts.

The petition satisfies the requirements of 37 CFR 1.137(b) in that petitioner has supplied (1) the replacement claims; (2) the petition fee of $1,620; and (3) an adequate statement of unintentional delay[1].

The application is being referred to the Office of Patent Application Processing (OPAP) for further processing.

[1] 37 CFR 1.137(b)(3) requires a statement that the entire delay in filing the required reply from the due date for the reply until the filing of a grantable petition pursuant to 37 CFR 1.137(b) was unintentional. While it is not apparent whether the person signing the statement of unintentional delay was in a position to have firsthand or direct knowledge of the facts and circumstances of the delay at issue, such statement is being treated as having been made as the result of a reasonable inquiry into the facts and circumstances of such delay. See 37 CFR 10.18(b) and Changes to Patent Practice and Procedure; Final Rule Notice, 62 Fed. Reg. 53131, 53178 (October 10, 1997), 1203 Off. Gaz. Pat. Office 63, 103 (October 21, 1997). In the event that such an inquiry has not been made, petitioner must make such an inquiry. If such inquiry results in the discovery that it is not correct that the entire delay in filing the required reply from the due date for the reply until the filing of a grantable petition pursuant to 37 CFR 1.137(b) was unintentional, petitioner must notify the Office.

Telephone inquires related to this decision should be directed to the undersigned at (571) 272-3204. Telephone inquiries related to processing at OPAP should be directed to their hotline at (571) 272-4000.

Sherry D. Brinkley
Petitions Examiner
Office of Petitions

Doc code : PET.OP.AGE
Description : Petition to make special based on Age/Health

PTO/SB/130 (07-09)
Approved for use through 07/31/2012. OMB 0651- 0031
U.S. Patent and Trademark Office; U.S. DEPARTMENT OF COMMERCE
Under the Paperwork Reduction Act of 1995, no persons are required to respond to a collection of information unless it contains a valid OMB control number

PETITION TO MAKE SPECIAL BASED ON AGE FOR ADVANCEMENT OF EXAMINATION UNDER 37 CFR 1.102(c)(1)

Application Information

Application Number	12608820	Confirmation Number	7176	Filing Date	2009-10-29
Attorney Docket Number (optional)	5249-0001	Art Unit	3715	Examiner	Musselman, Timothy
First Named Inventor	George Carter				
Title of Invention	SHOOTING SIMULATION SYSTEM AND METHOD				

Attention: Office of Petitions
An application may be made special for advancement of examination upon filing of a petition showing that the applicant is 65 years of age, or more. No fee is required with such a petition. See 37 CFR 1.102(c)(1) and MPEP 708.02 (IV).

APPLICANT HEREBY PETITIONS TO MAKE SPECIAL FOR ADVANCEMENT OF EXAMINATION IN THIS APPLICATION UNDER 37 CFR 1.102(c)(1) and MPEP 708.02 (IV) ON THE BASIS OF THE APPLICANT'S AGE.

A grantable petition requires one of the following items:
(1) Statement by one named inventor in the application that he/she is 65 years of age, or more; or
(2) Certification by a registered attorney/agent having evidence such as a birth certificate, passport, driver's license, etc. showing one named inventor in the application is 65 years of age, or more.

Name of Inventor who is 65 years of age, or older

Given Name	Middle Name	Family Name	Suffix
George		Carter	

A signature of the applicant or representative is required in accordance with 37 CFR 1.33 and 10.18.
Please see 37 CFR 1.4(d) for the format of the signature.

Select (1) or (2) :

○ (1) I am an inventor in this application and I am 65 years of age, or more.

● (2) I am an attorney or agent registered to practice before the Patent and Trademark Office, and I certify that I am in possession of evidence, and will retain such in the application file record, showing that the inventor listed above is 65 years of age, or more.

Signature	/michaeldiaz/	Date (YYYY-MM-DD)	2012-02-23
Name	Michael Diaz	Registration Number	40588

PTO/SB/130 (07-09)
Approved for use through 07/31/2012. OMB 0651- 0031
U.S. Patent and Trademark Office; U.S. DEPARTMENT OF COMMERCE
Under the Paperwork Reduction Act of 1995, no persons are required to respond to a collection of information unless it contains a valid OMB control number

Privacy Act Statement

The Privacy Act of 1974 (P.L. 93-579) requires that you be given certain information in connection with your submission of the attached form related to a patent application or patent. Accordingly, pursuant to the requirements of the Act, please be advised that: (1) the general authority for the collection of this information is 35 U.S.C. 2(b)(2); (2) furnishing of the information solicited is voluntary; and (3) the principal purpose for which the information is used by the U.S. Patent and Trademark Office is to process and/or examine your submission related to a patent application or patent. If you do not furnish the requested information, the U.S. Patent and Trademark Office may not be able to process and/or examine your submission, which may result in termination of proceedings or abandonment of the application or expiration of the patent.

The information provided by you in this form will be subject to the following routine uses:

1. The information on this form will be treated confidentially to the extent allowed under the Freedom of Information Act (5 U.S.C. 552) and the Privacy Act (5 U.S.C. 552a). Records from this system of records may be disclosed to the Department of Justice to determine whether the Fr eedom of Information Act requires disclosure of these records.

2. A record from this system of records may be disclosed, as a routine use, in the course of presenting evidence to a court, magistrate, or administrative tribunal, including disclosures to opposing counsel in the course of settlement negotiations.

3. A record in this system of records may be disclosed, as a routine use, to a Member of Congress submitting a request involving an individual, to whom the record pertains, when the individual has requested assistance from the Member with respect to the subject matter of the record.

4. A record in this system of records may be disclosed, as a routine use, to a contractor of the Agency having need for the information in order to perform a contract. Recipients of information shall be required to comply with the requirements of the Privacy Act of 1974, as amended, pursuant to 5 U.S.C. 552a(m).

5. A record related to an International Application filed under the Patent Cooperation Treaty in this system of records may be disclosed, as a routine use, to the International Bureau of the World Intellectual Property Organization, pursuant to the Patent Cooperation Treaty.

6. A record in this system of records may be disclosed, as a routine use, to another federal agency for purposes of National Security review (35 U.S.C. 181) and for review pursuant to the Atomic Energy Act (42 U.S.C. 218(c)).

7. A record from this system of records may be disclosed, as a routine use, to the Administrator, General Services, or his/her designee, during an inspection of records conducted by GSA as part of that agency's responsibility to recommend improvements in records management practices and programs, under authority of 44 U.S.C. 2904 and 2906. Such disclosure shall be made in accordance with the GSA regulations governing inspection of records for this purpose, and any other relevant (i.e., GSA or Commerce) directive. Such disclosure shall not be used to make determinations about indivi duals.

8. A record from this system of records may be disclosed, as a routine use, to the public after either publication of the application pursuant to 35 U.S.C. 122(b) or issuance of a patent pursuant to 35 U.S.C. 151. Further, a record may be disclosed, subject to the limitations of 37 CFR 1.14, as a routine use, to the public if the record was filed in an application which became abandoned or in which the proceedings were terminated and which application is referenced by either a published application, an application open to public inspections or an issued patent.

9. A record from this system of records may be disclosed, as a routine use, to a Federal, State, or local law enforcement agency, if the USPTO becomes aware of a violation or potential violation of law or regulation.

UNITED STATES PATENT AND TRADEMARK OFFICE

Commissioner for Patents
United States Patent and Trademark Office
P.O. Box 1450
Alexandria, VA 22313-1450
www.uspto.gov

In re Application of
George Carter

Application No. 12608820

Filed: October 29,2009

Attorney Docket No. 5249-0001

:DECISION ON PETITION TO MAKE SPECIAL
:UNDER 37 CFR 1.102(c)(1)

This is a decision on the electronic petition under 37 CFR 1.102 (c)(1), filed 23-FEB-2012 to make the above-identified application special based on applicant's age as set forth in MPEP § 708.02, Section IV.

The petition is **GRANTED**.

A grantable petition to make an application special under 37 CFR 1.102(c)(1), MPEP § 708.02, Section IV: Applicant's Age must include a statement by applicant or a registered practitioner having evidence that applicant is at least 65 years of age. No fee is required.

Accordingly, the above-identified application has been accorded "special" status and will be taken up for action by the examiner upon the completion of all pre-examination processing.

Telephone inquiries concerning this electronic decision should be directed to the Electronic Business Center at 866-217-9197.

All other inquiries concerning either the examination or status of the application should be directed to the Technology Center.

UNITED STATES PATENT AND TRADEMARK OFFICE

Commissioner for Patents
United States Patent and Trademark Office
P.O. Box 1450
Alexandria, VA 22313-1450
www.uspto.gov

PILLSBURY WINTHROP SHAW PITTMAN LLP
P.O. BOX 10500
MCLEAN VA 22102

MAILED
JUN 01 2011
OFFICE OF PETITIONS

In re Application of	:	
Elizabeth A. Groepler	:	
Application No. 12/608,866	:	DECISION ON PETITION
Filed: October 29, 2009	:	UNDER 37 CFR 1.137(b)
Attorney Docket No. **032933-0382767**	:	

This is a decision on the petition, filed February 14, 2011, which is being treated as a petition under 37 CFR 1.137(b) to revive the instant nonprovisional application for failure to timely notify the U.S. Patent and Trademark Office (USPTO) of the filing of an application in a foreign country, or under a multinational treaty that requires publication of applications eighteen months after filing. *See* 37 CFR 1.137(f).

The petition is **DISMISSED**.

In view of the above, this application became abandoned pursuant to 35 U.S.C. § 122(b)(2)(B)(iii) and 37 CFR 1.213(c) for failure to timely notify the Office of the filing of an application in a foreign country or under a multilateral international agreement that requires publication of applications 18 months after filing.

A review of the file record discloses that petitioner did submit a nonpublication request under 35 U.S.C. 122(b). On February 14, 2011, petitioner submitted a Notification of Foreign Filing pursuant to 37 CFR 1.213(c). However, the Notification was not accompanied by the statement "I hereby **rescind** the previous nonpublication request" required by 37 CFR 1.213(b). Accordingly, the petition cannot be granted at this time. A PTO/SB/36 form for Rescission of Previous Nonpublication Request has been enclosed for petitioner's convenience.

Any request for reconsideration of this decision must be submitted within **TWO (2) MONTHS** from the mail date of this decision. Extensions of time under 37 CFR 1.136(a) are permitted. The reconsideration request should include a cover letter entitled "Renewed Petition under 37 CFR 1.137(b)." This is **not** a final agency action within the meaning of 5 U.S.C. § 704.

The application file does not indicate a change of address has been filed in this case, although the address given on the petition differs from the address of record. A change of address should be filed in this case in accordance with MPEP 601.03. A courtesy copy of this decision is being mailed to the address noted on the petition. However, until otherwise instructed, all future correspondence regarding this application will be mailed solely to the address of record.

Further correspondence with respect to this matter should be addressed as follows:

By Mail: Mail Stop PETITION
Commissioner for Patents
P. O. Box 1450
Alexandria, VA 22313-1450

By hand: U. S. Patent and Trademark Office
Customer Service Window, Mail Stop Petitions
Randolph Building
401 Dulany Street
Alexandria, VA 22314

The centralized facsimile number is **(571) 273-8300.**

Telephone inquiries concerning this decision should be directed to Tredelle Jackson at (571) 272-2783.

Ramesh Krishnamurthy
Petitions Examiner
Office of Petitions

ATTACHMENT: PTO/SB/36 Rescission of Previous Nonpublication Request Form

cc: **DAVID A. JAKOPIN**
2475 HANOVER STREET
PALO ALTO CA 94304

UNITED STATES PATENT AND TRADEMARK OFFICE

Commissioner for Patents
United States Patent and Trademark Office
P.O. Box 1450
Alexandria, VA 22313-1450
www.uspto.gov

PILLSBURY WINTHROP SHAW PITTMAN LLP
P.O. BOX 10500
MCLEAN VA 22102

MAILED
JUL 19 2011
OFFICE OF PETITIONS

In re Application of	:	
Elizabeth A. Groepler	:	
Application No. 12/608,866	:	DECISION ON PETITION
Filed: October 29, 2009	:	UNDER 37 CFR 1.137(b)
Attorney Docket No. **032933-0382767**	:	

This is a decision on the renewed petition, filed June 07, 2011, which is being treated as a petition under 37 CFR 1.137(b) to revive the instant nonprovisional application for failure to timely notify the U.S. Patent and Trademark (USPTO) of the filing of an application in a foreign country, or under a multinational treaty that requires publication of applications eighteen months after filing. *See* 37 CFR 1.137(f).

The petition is **GRANTED**.

Petitioner states that the instant nonprovisional application is the subject of an application filed in an eighteen-month publication country on October 27, 2010. However, the USPTO was unintentionally not notified of this filing within 45 days subsequent to the filing of the subject application in an eighteen-month publication country.

In view of the above, this application became abandoned pursuant to 35 U.S.C. § 122(b)(2)(B)(iii) and 37 CFR 1.213(c) for failure to timely notify the Office of the filing of an application in a foreign country or under a multilateral international agreement that requires publication of applications 18 months after filing.

A petition to revive an application abandoned pursuant to 35 U.S.C. 122(b)(2)(B)(iii) for failure to notify the USPTO of a foreign filing must be accompanied by:

(1) the required reply which is met by the notification of such filing in a foreign country or under a multinational treaty;
(2) the petition fee as set forth in 37 CFR 1.17(m); and
(3) a statement that the entire delay in filing the required reply from the due date of the reply until the filing of a grantable petition was unintentional.

The instant petition has been found to be in compliance with 37 CFR 1.137(b). Accordingly, the failure to timely notify the USPTO of a foreign or international filing within 45 days after the date of filing of

such foreign or international application as provided by 35 U.S.C. § 122(b)(2)(B)(iii) and 37 CFR 1.213(c) is accepted as having been unintentionally delayed.

The previous Request and Certification under 35 U.S.C. § 122(b)(2)(B)(i) has been rescinded. A Notice Regarding Rescission of Nonpublication Request which sets forth the projected publication date accompanies this decision on petition.

Telephone inquiries concerning this decision should be directed to Tredelle Jackson at (571) 272-2783.

This application is being forward to Technology Center Art Unit 3632 for examination in due course.

Ramesh Krishnamurthy for
Petitions Examiner
Office of Petitions

ATTACHMENT: Notice Regarding Rescission of Nonpublication Request

UNITED STATES PATENT AND TRADEMARK OFFICE

UNITED STATES DEPARTMENT OF COMMERCE
United States Patent and Trademark Office
Address: COMMISSIONER FOR PATENTS
P.O. Box 1450
Alexandria, Virginia 22313-1450
www.uspto.gov

APPLICATION NUMBER	FILING OR 371(C) DATE	FIRST NAMED APPLICANT	ATTY. DOCKET NO./TITLE
12/608,866	10/29/2009	Elizabeth A. Groepler	032933-0382767

CONFIRMATION NO. 7281

27498
PILLSBURY WINTHROP SHAW PITTMAN LLP
P.O. BOX 10500
MCLEAN, VA 22102

NONPUBLICATION RESCISSION LETTER

OC000000048838963

Date Mailed: 07/19/2011

Communication Regarding Rescission Of Nonpublication Request and/or Notice of Foreign Filing

Applicant's rescission of the previously-filed nonpublication request and/or notice of foreign filing is acknowledged. The paper has been reflected in the Patent and Trademark Office's (USPTO's) computer records so that the earliest possible projected publication date can be assigned.

The projected publication date is 10/27/2011.

If applicant rescinded the nonpublication request before or on the date of "foreign filing,"[1] then no notice of foreign filing is required.

If applicant foreign filed the application after filing the above application and before filing the rescission, and the rescission did not also include a notice of foreign filing, then a notice of foreign filing (not merely a rescission) is required to be filed within 45 days of the date of foreign filing. See 35 U.S.C. § 122(b)(2)(B)(iii), and Clarification of the United States Patent and Trademark Office's Interpretation of the Provisions of 35 U.S.C. § 122(b)(2)(B)(ii)-(iv), 1272 Off. Gaz. Pat. Office 22 (July 1, 2003).

If a notice of foreign filing is required and is not filed within 45 days of the date of foreign filing, then the application becomes abandoned pursuant to 35 U.S.C. § 122(b)(2)(B)(iii). In this situation, applicant should either file a petition to revive or notify the Office that the application is abandoned. See 37 CFR 1.137(f). Any such petition to revive will be forwarded to the Office of Petitions for a decision. Note that the filing of the petition will not operate to stay any period of reply that may be running against the application.

Questions regarding petitions to revive should be directed to the Office of Petitions at (571) 272-3282.

[1] Note, for purpose of this notice, that "foreign filing" means "filing an application directed to the same invention in another country, or under a multilateral international agreement, that requires publication of applications 18 months after filing".

/tdjackson/

Office of Data Management, Application Assistance Unit (571) 272-4000, or (571) 272-4200, or 1-888-786-0101

UNITED STATES PATENT AND TRADEMARK OFFICE

UNITED STATES DEPARTMENT OF COMMERCE
United States Patent and Trademark Office
Address: COMMISSIONER FOR PATENTS
P.O. Box 1450
Alexandria, Virginia 22313-1450
www.uspto.gov

APPLICATION NO.	FILING DATE	FIRST NAMED INVENTOR	ATTORNEY DOCKET NO.	CONFIRMATION NO.
12/608,975	10/29/2009	Taro Iketaki	TOSH/0072US	7479

26290 7590 08/30/2010
PATTERSON & SHERIDAN, L.L.P.
3040 POST OAK BOULEVARD
SUITE 1500
HOUSTON, TX 77056

EXAMINER
CHAUDRY, MUJTABA M

ART UNIT	PAPER NUMBER
2112	

MAIL DATE	DELIVERY MODE
08/30/2010	PAPER

Please find below and/or attached an Office communication concerning this application or proceeding.

The time period for reply, if any, is set in the attached communication.

UNITED STATES PATENT AND TRADEMARK OFFICE

Commissioner for Patents
United States Patent and Trademark Office
P.O. Box 1450
Alexandria, VA 22313-1450
www.uspto.gov

PATTERSON & SHERIDAN, L.L.P.
3040 POST OAK BOULEVARD
SUITE 1500
HOUSTON TX 77056

In re Application of: IKETAKI et al.
Application No. 12/608,975
Atty Docket Number: TOSH/0072US
Filed: October 29, 2009
For: **MAGNETIC DISK DRIVE CAPABLE OF REFRESHING DATA WRITTEN TO DISK AND DATA REFRESH METHOD**

DECISION ON REQUEST TO PARTICIPATE IN PATENT PROSECUTION HIGHWAY PILOT PROGRAM AND PETITION TO MAKE SPECIAL UNDER 37 CFR 1.102(d)

This is a decision on the request to participate in the Patent Prosecution Highway (PPH) pilot program and the petition under 37 CFR 1.102(d), filed May 21, 2010 to make the above-identified application special.

The request and petition are **GRANTED**.

A grantable request to participate in the PPH program and petition to make special require:

(1) The U.S. application is
(a) a Paris Convention application which either
(i) validly claims priority under 35 U.S.C. 119(a) and 37 CFR 1.55 to one or more applications filed in the JPO, or
(ii) validly claims priority to a PCT application that contains no priority claims,

Or

(b) a national stage application under the PCT (an application which entered the national stage in the U.S. from a PCT international application after compliance with 35 U.S.C. 371), which PCT application
(i) validly claims priority to an application filed in the JPO, or
(ii) validly claims priority to a PCT application that contains no priority claims, or
(iii) contains no priority claim,

Or

(c) a so-called bypass application filed under 35 U.S.C. 111 (a) which validly claims benefit under 35 U.S.C. 120 to a PCT application, which PCT application
(i) validly claims priority to an application filed in the JPO, or

(ii) validly claims priority to a PCT application that contains no priority claims, or
(iii) contains no priority claim.

Where the JPO application that contains the allowable/patentable claims is not the same application for which priority is claimed in the U.S. application, applicant must identify the relationship between the JPO application that contains the allowable/patentable claims and the JPO priority application claimed in the U.S. application.

(2) Applicant must submit a copy of:
a. The allowable/patentable claim(s) from the JPO application(s) or if a copy of the allowable/patentable claims is available via the Dossier Access System (DAS) applicant may request the USPTO obtain a copy from the DAS, however if the USPTO is unable to obtain a copy from the DAS the applicant will be required to submit a copy;
b. An English translation of the allowable/patentable claim(s) and
c. A statement that the English translation is accurate;

(3) Applicant must:
a. Ensure all the claims in the U.S. application must sufficiently correspond or be amended to sufficiently correspond to the allowable/patentable claim(s) in the JPO application(s) and
b. Submit a claims correspondence table in English;

(4) Examination of the U.S. application has not begun;

(5) Applicant must submit:
a. Documentation of prior office action: i. a copy of the office action(s)just prior to the "Decision to Grant a Patent" from each of the JPO application(s) containing the allowable/patentable claim(s) or
ii. if the allowable/patentable claims(s) are from a "Notification of Reasons for Refusal" then the Notification of Reasons for Refusal or
iii. if the JPO application is a first action allowance then no office action from the JPO is necessary should be indicated on the request/petition form;

Further, if a copy of the documents from a or b above is available via the Dossier Access System (DAS) applicant may request the USPTO obtain a copy from the DAS, however if the USPTO is unable to obtain a copy from the DAS the applicant will be required to submit a copy; b. An English language translation of the JPO Office action from (5)(a)(i)-(ii) above c. A statement that the English translation is accurate;

(6) Applicant must submit:
a. An IDS listing the documents cited by the JPO examiner in the JPO office action (unless already submitted in this application)
b. Copies of the documents except U.S. patents or U.S. patent application publications (unless already submitted in this application);

(7) The required petition fee under 37 CFR 1.17(h).

The petition is **GRANTED.**

The request to participate in the PPH pilot program and petition are found to comply with the above requirements. Accordingly, the above-identified application has been accorded "special" status.

The application is being forwarded to the examiner for action on the merits commensurate with this decision.

Telephone inquiries concerning this decision should be directed to Mano Padmanabhan at 571-272-4210.

All other inquiries concerning the examination or status of the application is accessible in the PAIR system at http://www.uspto.gov/ebc/index.html.

/Mano Padmanabhan/

Mano Padmanabhan
Quality Assurance Specialist, Technology Center 2100, Workgroup 2180
571-272-4210

UNITED STATES PATENT AND TRADEMARK OFFICE

Commissioner for Patents
United States Patent and Trademark Office
P.O. Box 1450
Alexandria, VA 22313-1450
www.uspto.gov

Ray Lee
40 Clearview Ave.
Princeton NJ 08540

MAILED

JAN 3 1 2011

OFFICE OF PETITIONS

In re Application of :
LEE, RAY F. :
Application No. 12/608,978 : DECISION ON PETITION
Filed: 10/29/2009 :
Title: MULTIPLE-PEOPLE MRI SCANNER :
THAT CAN SIMULTANEOUSLY SCAN :
MORE THAN ONE PERSON :

This is in response to the petition under 37 CFR 1.181, filed November 3, 2010, to withdraw the holding of abandonment in the above-identified application.

On January 28, 2010, the Office mailed a Notice to File Corrected Application Papers, which set a two month extendable period to correct the informalities in the application. Petitioner did not obtain any extensions of time for response. Accordingly, the application became abandoned on March 29, 2010. On October 14, 2010, the Office mailed a Notice of Abandonment.

In the present petition, petitioner requests that the Office withdraw the holding of abandonment because petitioner did not receive the Notice to File Corrected Application Papers at the correspondence address of record.

A review of the record does not indicate any irregularity in the mailing of the Notice to File Corrected Application Papers and in the absence of any irregularity in the mailing, there is a strong presumption that the Notice was properly mailed to the address of record. If an allegation that an Office action was never received is adequately supported by an applicant on petition, the Office may grant the petition to withdraw the holding of abandonment and remail the Office action.

Pursuant to MPEP 711.03(c)(I)(A), the showing required to establish nonreceipt of an Office communication must include a statement describing the system used for recording an Office action received at the correspondence address of record with the USPTO. The statement should establish that the docketing system is sufficiently reliable. The practitioner or pro se applicant must also state that the Office action was not received at the correspondence address of record, and that a search of their records, including any file jacket or the equivalent, and the application contents, indicates that the

Office action was not received. A copy of the record(s) used by the practitioner or pro se applicant where the non-received Office action would have been entered had it been received is required.

As petitioner is a pro-se applicant, the Office understands that petitioner may not keep a formal docket record system for his correspondence with the USPTO. Petitioner must provide an explanation of the manner in which he receives mail from the USPTO, maintains files for patent matters, and treats mail received for such matters. Specifically, petitioner must explain in detail his system for keeping track of patent matters - where petitioner keeps the correspondence; where she writes the due dates; how he knows when replies are due, etc. In essence, petitioner must show how he reminds himself of response due dates and show that the due date for the Notice to File Corrected Application Papers was not entered into that system. Petitioner should include any available documentary evidence such as copies of any records or other methods, which could serve as a reminder of the due date for a response to an Office communication, and where petitioner would have entered the receipt date of the Office communication had petitioner received it (for example, a copy of the outside of a file or a calendar maintained by petitioner), if these documents are available.

In view of the above, the petition to withdraw the holding of abandonment is **dismissed**. A copy of the Notice to File Corrected Application Papers accompanies this decision for petitioner's convenience.

Any request for reconsideration of the dismissal of the petition to withdraw the holding of abandonment must be submitted within **TWO (2) MONTHS** from the mailing date of this decision. The request for reconsideration should include a cover letter entitled "Renewed Petition under 37 CFR 1.181 to Withdraw the Holding of Abandonment," as well as statements and documentary evidence, as indicate above, to demonstrate nonreceipt of the Notice to File Corrected Application Papers. Extensions of this time period are permitted under 37 CFR 1.136(a).

If petitioner is unable to provide the information requested above, petitioner may wish to file a petition to revive the application pursuant to 37 CFR 1.137(b) on the basis of unintentional delay instead of filing a Renewed Petition under 37 CFR 1.181.

A grantable petition pursuant to 37 CFR 1.137(b) must be accompanied by:

(1) The reply required to the outstanding Notice to File Corrected Application Papers;

(2) The petition fee as set forth in § 1.17(m), currently a $810.00 fee for a small entity; and,

(3) A statement that the entire delay in filing the required reply from the due date for the reply until the filing of a grantable petition was unintentional. The Director may require additional information where there is a question whether the delay was unintentional.

The appropriate form for filing a petition under 37 CFR 1.137(b) is enclosed.

Further correspondence with respect to this matter should be addressed as follows:

By mail: Mail Stop Petition
Commissioner for Patents
P.O. Box 1450
Alexandria, VA 22313-1450

By FAX: (571) 273-8300
Attn: Office of Petitions

By hand: Customer Service Window
Randolph Building
401 Dulany Street
Alexandria, VA 22314

Correspondence may also be submitted electronically via EFS-Web.

Telephone inquiries related to this decision may be directed to the undersigned at (571) 272-3211.

C. T. Donnell

Christina Tartera Donnell
Senior Petitions Attorney
Office of Petitions

Enclosures: Copy of Notice to File Corrected Application Papers and Form for Petition for Revival of an Application for Patent Abandoned Unintentionally under 37 CFR 1.137(b)

UNITED STATES PATENT AND TRADEMARK OFFICE

UNITED STATES DEPARTMENT OF COMMERCE
United States Patent and Trademark Office
Address: COMMISSIONER FOR PATENTS
P.O. Box 1450
Alexandria, Virginia 22313-1450
www.uspto.gov

APPLICATION NUMBER	FILING OR 371(C) DATE	FIRST NAMED APPLICANT	ATTY. DOCKET NO./TITLE
12/608,978	10/29/2009	Ray F. Lee	

CONFIRMATION NO. 7486

FORMALITIES LETTER

Ray Lee
40 Clearview Ave.
Princeton, NJ 08540

OC000000039894638

Date Mailed: 01/28/2010

NOTICE TO FILE CORRECTED APPLICATION PAPERS

Filing Date Granted

An application number and filing date have been accorded to this application. The application is informal since it does not comply with the regulations for the reason(s) indicated below. Applicant is given TWO MONTHS from the date of this Notice within which to correct the informalities indicated below. Extensions of time may be obtained by filing a petition accompanied by the extension fee under the provisions of 37 CFR 1.136(a).

The required item(s) identified below must be timely submitted to avoid abandonment:

- Replacement drawings in compliance with 37 CFR 1.84 and 37 CFR 1.121(d) are required. The drawings submitted are not acceptable because:
  - The drawings contain excessive text. Suitable descriptive legends may be used, or may be required by the Examiner where necessary for understanding of the drawing but should contain as few words as possible (see 37 CFR 1.84(o)). See Figure(s) 1.
  - The drawings submitted to the Office are not electronically reproducible because portions of figures 2 are missing and/or blurry.

Applicant is cautioned that correction of the above items may cause the specification and drawings page count to exceed 100 pages. If the specification and drawings exceed 100 pages, applicant will need to submit the required application size fee.

Replies should be mailed to:

Mail Stop Missing Parts
Commissioner for Patents
P.O. Box 1450
Alexandria VA 22313-1450

Registered users of EFS-Web may alternatively submit their reply to this notice via EFS-Web.
https://sportal.uspto.gov/authenticate/AuthenticateUserLocalEPF.html

For more information about EFS-Web please call the USPTO Electronic Business Center at **1-866-217-9197** or visit our website at http://www.uspto.gov/ebc.

If you are not using EFS-Web to submit your reply, you must include a copy of this notice.

/tnguyen/

Office of Data Management, Application Assistance Unit (571) 272-4000, or (571) 272-4200, or 1-888-786-0101

UNITED STATES PATENT AND TRADEMARK OFFICE

Commissioner for Patents
United States Patent and Trademark Office
P.O. Box 1450
Alexandria, VA 22313-1450
www.uspto.gov

MEAGHER EMANUEL LAKS ROEHLING & GOLDBERG, LLP
ONE PALMER SQUARE
SUITE 325
PRINCETON NJ 08542

MAILED

AUG 22 2011

OFFICE OF PETITIONS

In re Application of
Ray F. Lee
Application No. 12/608,978
Filed: 10/29/2009
Attorney Docket No. Lee - 1

DECISION ON PETITION

This is a decision on the petition under 37 CFR 1.137(b), filed August 2, 2011, to revive the above-identified application.

The petition is **granted**.

The above-identified application became abandoned for failure to file a timely response to the Notice to File Corrected Application Papers mailed January 28, 2010, which set a two-month extendable period to reply. No extensions of time under the provisions of 37 CFR 1.136(a) were obtained. Accordingly, the above-identified application became abandoned on March 29, 2010. A Notice of Abandonment was mailed on October 14, 2010.

Petitioner has met the requirements to revive the above-identified application pursuant to 37 CFR 1.137(b). Petitioner submitted the required reply, paid the petition fee, and made the proper statement of unintentional delay.

This matter is being referred to the Office of Patent Application Processing.

Telephone inquiries specific to this decision may be directed to the undersigned at (571) 272-3211.

C. T. Donnell

Christina Tartera Donnell
Senior Petitions Attorney
Office of Petitions

Doc Code: PET.AUTO **Document Description: Petition automatically granted by EFS-Web**	PTO/SB/83 U.S. Patent and Trademark Office Department of Commerce

Electronic Petition Request	**REQUEST FOR WITHDRAWAL AS ATTORNEY OR AGENT AND CHANGE OF CORRESPONDENCE ADDRESS**
Application Number	12609014
Filing Date	30-Oct-2009
First Named Inventor	Bradford Macy
Art Unit	3771
Examiner Name	JUSTINE YU
Attorney Docket Number	01071-002
Title	APPARATUSES TO FILTER AIR

◉ Please withdraw me as attorney or agent for the above identified patent application and the practitioners of record associated with Customer Number: 57373

The reason(s) for this request are those described in 37 CFR:

10.40(c)(5)

Certifications

☒ I/We have given reasonable notice to the client, prior to the expiration of the response period, that the practitioner(s) intend to withdraw from employment

☒ I/We have delivered to the client or a duly authorized representative of the client all papers and property (including funds) to which the client is entitled

☒ I/We have notified the client of any responses that may be due and the time frame within which the client must respond

Change the correspondence address and direct all future correspondence to the first named inventor or assignee that has properly made itself of record pursuant to 37 CFR 3.71:

Name	Innovative Healthcare Solutions Bradford Macy, Jr., President
Address	2384 Gehringer Drive
City	Concord
State	CA
Postal Code	94520
Country	US

I am authorized to sign on behalf of myself and all withdrawing practitioners.	
Signature	/atcascio/
Name	Anthony T Cascio
Registration Number	29904

UNITED STATES PATENT AND TRADEMARK OFFICE

Commissioner for Patents
United States Patent and Trademark Office
P.O. Box 1450
Alexandria, VA 22313-1450
www.uspto.gov

Decision Date : November 17,2011

In re Application of :

Bradford Macy

Application No : 12609014

Filed : 30-Oct-2009

Attorney Docket No : 01071-002

DECISION ON REQUEST TO WITHDRAW AS ATTORNEY/AGENTOF RECORD

This is an electronic decision on the Request to Withdraw as attorney or agent of record under 37 CFR § 1.36(b), filed November 17,2011

The request is **APPROVED.**

The request was signed by Anthony T Cascio (registration no. 29904) on behalf of all attorneys/agents associated with Customer Number 57373 . All attorneys/agents associated with Cusotmer Number 57373 have been withdrawn.

Since there are no remaining attorneys of record, all future communications from the Office will be directed to the first named inventor or assignee that has properly made itself of record pursuant to 37 CFR 3.71, with correspondence address:

Name	Innovative Healthcare Solutions
Name2	Bradford Macy, Jr., President
Address 1	2384 Gehringer Drive
Address 2	
City	Concord
State	CA
Postal Code	94520
Country	US

As a reminder, requester is required to inform the first named inventor or assignee that has properly made itself of record pursuant to 37 CFR 3.71 of the electronically processed petition.

Telephone inquiries concerning this decision should be directed to the Patent Electronic Business Center (EBC) at 866-217-9197.

Office of Petitions

UNITED STATES PATENT AND TRADEMARK OFFICE

Commissioner for Patents
United States Patent and Trademark Office
P.O. Box 1450
Alexandria, VA 22313-1450
www.uspto.gov

Century IP Group, Inc. [IBM IL]
c/o IBM CORPORATION, T.J. WATSON RESEARCH CENTER
P.O. BOX 218
YORKTOWN HEIGHTS NY 10598

MAILED

DEC 20 2010

OFFICE OF PETITIONS

In re Application of	:	
Alex Glikson, et al.	:	
Application No. 12/609,023	:	DECISION ON PETITION
Filed: October 30, 2009	:	
Attorney Docket No. IL920090036US1	:	

This is a decision on the petition under the unintentional provisions of 37 CFR 1.137(b), filed November 18, 2010, to revive the above-identified application.

The petition is **GRANTED**.

The application became abandoned for failure to reply in a timely manner to the Notice to File Missing Parts of Nonprovisional Application (Notice), mailed November 13, 2009. The Notice set a period for reply of two (2) months from the mail date of the Notice. No extensions of time under the provisions of 37 CFR 1.136(a) were obtained. Accordingly, the application became abandoned on January 14, 2010. The Notice of Abandonment was mailed November 3, 2010.

The petition satisfies the requirements of 37 CFR 1.137(b) in that petitioner has supplied (1) the reply in the form of a specification, (2) the petition fee of $1,620, and (3) a proper statement of unintentional delay.

Telephone inquiries concerning this decision should be directed to Terri Johnson at (571) 272-2991.

This application is being referred to the Office of Patent Application Processing for appropriate action on the reply received.

/Terri Johnson/
Terri Johnson
Petitions Examiner
Office of Petitions

UNITED STATES PATENT AND TRADEMARK OFFICE

Commissioner for Patents
United States Patent and Trademark Office
P.O. Box 1450
Alexandria, VA 22313-1450
www.uspto.gov

THOMAS, KAYDEN, HORSTEMEYER & RISLEY, LLP
600 GALLERIA PARKWAY, S.E.
STE 1500
ATLANTA GA 30339-5994

MAILED
AUG 02 2010
OFFICE OF PETITIONS

In re Application of	:	
Juan LIU et al.	:	
Application No. 12/609,135	:	DECISION ON PETITION
Filed: August 29, 2008	:	
Attorney Docket No. 291401-1040	:	

This is a decision on the petition under 37 CFR 1.82 filed December 28, 2009, in response to the Notice of Incomplete Nonprovisional Application.

Petitioner asserts that the application should be accorded the October 30, 2009 filing date because there is no information contained in these drawings that is not fully supported by the original specification. A review of the Office records indicates that drawings are not necessary for an understanding of the invention under 35 U.S.C. 113.

The petitioner has provided the Office with drawings; accordingly this application is entitled to a filing date of October 30, 2009, and has been so accorded.

In view of the above, the petition is **GRANTED**.

This application file is being referred to the Office of Patent Application Processing.

Telephone inquiries relating to this decision should be directed to Michelle R. Eason at (571) 272-4231. Telephone inquiries related to OIPE processing should be directed to their hotline at (571) 272-4100.

Thurman K. Page
Petitions Examiner
Office of Petitions

PTO/SB/20PCT-KR (06-10)
Approved for use through 01/31/2012. OMB 0651-0058
U.S. Patent and Trademark Office; U. S. DEPARTMENT OF COMMERCE
Under the Paperwork Reduction Act of 1995, no persons are required to respond to a collection of information unless it displays a valid OMB control number.

REQUEST FOR PARTICIPATION IN THE PATENT COOPERATION TREATY - PATENT PROSECUTION HIGHWAY (PCT-PPH) PILOT PROGRAM BETWEEN THE KOREAN INTELLECTUAL PROPERTY OFFICE (KIPO) AND THE USPTO

Application No:	12/609,226	Filing date:	October 30, 2009
First Named Inventor:	Kevin Thimmesch		
Title of the Invention:	BLENDED SALT COMPOSITION AND METHOD OF USING		

THIS REQUEST FOR PARTICIPATION IN THE PCT-PPH PILOT PROGRAM ALONG WITH THE REQUIRED DOCUMENTS MUST BE SUBMITTED VIA EFS-WEB. INFORMATION REGARDING EFS-WEB IS AVAILABLE AT HTTP://WWW.USPTO.GOV/EBC/EFS_HELP.HTML

APPLICANT HEREBY REQUESTS PARTICIPATION IN THE PCT-PPH PROGRAM AND PETITIONS TO MAKE THE ABOVE-IDENTIFIED APPLICATION SPECIAL UNDER THE PCT-PPH PROGRAM.

The above-identified application is (1) a national stage entry of the corresponding PCT application, or (2) a national stage entry of another PCT application which claims priority to the corresponding PCT application, or (3) a national application that claims domestic/ foreign priority to the corresponding PCT application, or (4) a national application which forms the basis for the priority claim in the corresponding PCT application, or (5) a continuing application of a U.S. application that satisfies one of (1) to (4) above, or (6) a U.S. application that claims domestic benefit to a U.S. provisional application which forms the basis for the priority claim in the corresponding PCT application.

The corresponding PCT application number(s) is/are: PCT/US2009/062739

The international date of the corresponding PCT application(s) is/are: October 30, 2009

I. List of Required Documents:

a. **A copy of the latest international work product (WO/ISA, WO/IPEA, or IPER) in the above–identified corresponding PCT application(s)**

- [x] Is attached.
- [ ] Is not attached because the document is already in the U.S. application.

b. **A copy of all claims which were indicated as having novelty, inventive step and industrial applicability in the above-identified corresponding PCT application(s).**

- [ ] Is attached.
- [x] Is not attached because the document is already in the U.S. application.

c. **English translations of the documents in a. and b. above are attached (if the documents are not in the English language). A statement that the English translation is accurate is attached for the document in b. above.**

This collection of information is required by 35 U.S.C. 119, 37 CFR 1.55, and 37 CFR 1.102(d). The information is required to obtain or retain a benefit by the public, which is to file (and by the USPTO to process) an application. Confidentiality is governed by 35 U.S.C. 122 and 37 CFR 1.11 and 1.14. This collection is estimated to take 2 hours to complete, including gathering, preparing, and submitting the completed application form to the USPTO. Time will vary depending upon the individual case. Any comments on the amount of time you require to complete this form and/or suggestions for reducing this burden should be sent to the Chief Information Officer, U.S. Patent and Trademark Office, U.S. Department of Commerce, P.O. Box 1450, Alexandria, VA 22313-1450. DO NOT SEND FEES OR COMPLETED FORMS TO THIS ADDRESS.

Approved for use through 01/31/2012. OMB 0651-0058
U.S.Patent and Trademark Office; U.S. DEPARTMENT OF COMMERCE

Under the Paperwork Reduction Act of 1995, no persons are required to respond to a collection of information unless it displays a valid OMB control number.

REQUEST FOR PARTICIPATION IN THE PCT-PPH PILOT PROGRAM BETWEEN THE KIPO AND THE USPTO

(continued)

Application No.:	12/609,226
First Named Inventor:	Kevin Thimmesch

d. **(1) An information disclosure statement listing the documents cited in the international work products (ISR, WO/ISA, WO/IPEA, IPER) of the corresponding PCT application.**

■ Is attached

☐ Has already been filed in the above-identified U.S. application on _____

(2) Copies of all documents (except) for U.S. patents or U.S. patent application publications)

■ Are attached.

Have already been filed in the above-identified U.S. application on _____

II. Claims Correspondence Table:

Claims in US Application	Patentable Claims in the corresponding PCT Application	Explanation regarding the correspondence
1-21	1-21	Identical set of claims filed in both applications

III. All the claims in the US application sufficiently correspond to the patentable claims in the corresponding PCT application.

Signature Tracy Bornman	Date 10/6/10
Name (Print/Typed) Tracy Bornman	Registration Number 42,347

UNITED STATES PATENT AND TRADEMARK OFFICE

UNITED STATES DEPARTMENT OF COMMERCE
United States Patent and Trademark Office
Address: COMMISSIONER FOR PATENTS
P.O. Box 1450
Alexandria, Virginia 22313-1450
www.uspto.gov

APPLICATION NO.	FILING DATE	FIRST NAMED INVENTOR	ATTORNEY DOCKET NO.	CONFIRMATION NO.
12/609,226	10/30/2009	Kevin Thimmesch	39933	7979

23589 7590 12/30/2010
Hovey Williams LLP
10801 Mastin Blvd., Suite 1000
Overland Park, KS 66210

EXAMINER
BARRY, CHESTER T

ART UNIT	PAPER NUMBER
1776	

MAIL DATE	DELIVERY MODE
12/30/2010	PAPER

Please find below and/or attached an Office communication concerning this application or proceeding.

The time period for reply, if any, is set in the attached communication.

UNITED STATES PATENT AND TRADEMARK OFFICE

Commissioner for Patents
United States Patent and Trademark Office
P.O. Box 1450
Alexandria, VA 22313-1450
www.uspto.gov

DEC 30 2010

CT

In re application of Kevin Thimmesch et al Serial No. 12/609,226 Filed: October 30, 2009 For: BLENDED SALT COMPOSITION AND METHOD OF USING	: : : : : :	DECISION ON REQUEST TO PARTICIPATE IN PATENT PROSECUTION HIGHWAY PROGRAM AND PETITION TO MAKE SPECIAL UNDER 37 CFR 1.102(a)

This is a decision on the request to participate in the PCT Patent Prosecution Highway (PCT-PPH) pilot program and the petition under 37 CFR 1.102(a), filed October 6, 2010, to make the above-identified application special.

The request and petition are **DISMISSED**.

A grantable request to participate in the PCT-PPH pilot program and petition to make special require:

(1) The U.S. application must disclose an eligible relationship to one or more PCT applications where the ISA or IPEA are the JPO, EPO, USPTO or KIPO;

(2) At least one claim in the PCT application has novelty, inventive step, and industrial applicability and must be free of any observations in Box VIII in the latest work product in the international stage or applicant must identify and explain why the claim(s) is/are not subject to the observation in Box VIII;

(3) Applicant must submit a copy of the claim(s) from the PCT application(s) that have novelty, inventive step, and industrial applicability along with an English translation thereof and a statement that the English translation is accurate, if the claims are not in the English language;

(4) Applicant must submit a claims correspondence table in English and all the independent claims in the U.S. application must sufficiently correspond or be amended to sufficiently correspond to the claim(s) that have novelty, inventive step, and industrial applicability in the PCT application(s);

(5) Examination of the U.S. application has not begun;

(6) Applicant must submit a copy of the latest international work product from the PCT application indicating that the claim(s) have novelty, inventive step, and industrial applicability along with an English translation thereof if the latest international work product is not in the English language; and

(7) Applicant must submit an IDS listing the documents cited by the PCT examiner in the international work product along with copies of documents except U.S. patents or U.S. patent application publications.

The request to participate in the PPH program and petition fail because:

(3) Applicant must submit a copy of the claim(s) from the PCT application(s) that have novelty, inventive step, and industrial applicability along with an English translation thereof and a statement that the English translation is accurate, if the claims are not in the English language.

Applicant indicates that a copy of all claims which were indicated as having novelty, inventive step, and industrial applicability in the PCT is not attached to the Request for Participation in the PCT-PPH Pilot Program because the document is already in the US application. However, upon review of the file of the present application, no copy of the PCT claims can be found.

As no copy of the claims which were indicated as having novelty, inventive step, and industrial applicability in the PCT has been provided, it cannot be determined if the claims in the U.S. application sufficiently correspond to the claim(s) that have novelty, inventive step, and industrial applicability in the PCT application(s).

Applicant is given **ONE** opportunity within a time period of **ONE MONTH or THIRTY DAYS**, whichever is longer, from the mailing date of this decision to correct the deficiencies. **NO EXTENSION OF TIME UNDER 37 CFR 1.136 IS PERMITTED.** If the deficiencies are not corrected with the time period given, the application will await action in its regular turn.

Response must be filed via the Electronic Filing System (EFS) and indexed with the following document description: "Petition to make special under PCT-Patent Pros Hwy." Any preliminary amendments and IDS submitted with the PPH documents must be separately indexed as a preliminary amendment and IDS, respectively.

Any inquiry regarding this decision should be directed to Christine Tierney, Quality Assurance Specialist, at (571) 272-1055.

Application No. 12/609,226

All other inquiries concerning the examination or status of the application is accessible in the PAIR system at http://www.uspto.gov/ebc/index.html.

/Christine Tierney/

Christine Tierney
Quality Assurance Specialist
Technology Center 1700

IN THE UNITED STATES PATENT AND TRADEMARK OFFICE

Application of:	Docket No.: 39933
Kevin Thimmesch	Confirmation No.: 7979
Serial No.: 12/609,226	Group Art Unit No.: 1776
Filed: October 30, 2009	Customer No.: 23589
BLENDED SALT COMPOSITION AND METHOD OF USING	Examiner: Barry, Chester T.

Commissioner for Patents
P.O. Box 1450
Alexandria, VA 22313-1450

REQUEST FOR RECONSIDERATION FOR PARTICIPATION IN PCT-PPH PROGRAM BETWEEN KIPO AND USPTO

The original PCT-PPH Request filed on October 6, 2010, was dismissed because a copy of the claims indicated as having novelty, inventive step, and industrial applicability in the PCT was not provided. In response to the Dismissal dated December 30, 2010, a copy of the claims is submitted herewith, along with a renewed Request. It is believed that the Request for participation in the PCT-PPH program is in condition to be granted, and such is respectfully requested.

Applicants note that a copy of the PCT claims was not originally provided because, as indicated on page 2 of the Request, identical claims were filed in both applications. In such a case, an applicant is *not* required to submit a copy of the claims from the PCT application, according to the Notice from Director Kappos, dated June 2, 2010, item II.B.(7), which states:

> If the claims in the U.S. application for which participation in the PCT-PPH pilot program is requested are identical to the claims from the corresponding PCT application, and are in the English language, *applicant may just indicate such in the PCT-PPH request* and *it will not be necessary for applicant to submit a copy of the claims from the corresponding PCT application.*

(emphasis added). Although in the present situation, Applicants are not required to submit a copy of the PCT claims, a copy is submitted herewith to facilitate granting of the present Request. Should any issues remain, the Patent Office is urged to contact the undersigned.

Respectfully submitted,

By Tracy Bornman

Tracy Bornman, Reg. No. 42,347
HOVEY WILLIAMS LLP
10801 Mastin Blvd., Suite 1000
Overland Park, Kansas 66210
ATTORNEYS FOR APPLICANT(S)

PTO/SB/20PCT-KR (06-10)
Approved for use through 01/31/2012. OMB 0651-0058
U.S. Patent and Trademark Office; U. S. DEPARTMENT OF COMMERCE
Under the Paperwork Reduction Act of 1995, no persons are required to respond to a collection of information unless it displays a valid OMB control number.

REQUEST FOR PARTICIPATION IN THE PATENT COOPERATION TREATY - PATENT PROSECUTION HIGHWAY (PCT-PPH) PILOT PROGRAM BETWEEN THE KOREAN INTELLECTUAL PROPERTY OFFICE (KIPO) AND THE USPTO

Application No:	12/609,226	Filing date:	October 30, 2009
First Named Inventor:	Kevin Thimmesch		
Title of the Invention:	BLENDED SALT COMPOSITION AND METHOD OF USING		

THIS REQUEST FOR PARTICIPATION IN THE PCT-PPH PILOT PROGRAM ALONG WITH THE REQUIRED DOCUMENTS MUST BE SUBMITTED VIA EFS-WEB. INFORMATION REGARDING EFS-WEB IS AVAILABLE AT HTTP://WWW.USPTO.GOV/EBC/EFS_HELP.HTML

APPLICANT HEREBY REQUESTS PARTICIPATION IN THE PCT-PPH PROGRAM AND PETITIONS TO MAKE THE ABOVE-IDENTIFIED APPLICATION SPECIAL UNDER THE PCT-PPH PROGRAM.

The above-identified application is (1) a national stage entry of the corresponding PCT application, or (2) a national stage entry of another PCT application which claims priority to the corresponding PCT application, or (3) a national application that claims domestic/ foreign priority to the corresponding PCT application, or (4) a national application which forms the basis for the priority claim in the corresponding PCT application, or (5) a continuing application of a U.S. application that satisfies one of (1) to (4) above, or (6) a U.S. application that claims domestic benefit to a U.S. provisional application which forms the basis for the priority claim in the corresponding PCT application.

The corresponding PCT application number(s) is/are: PCT/US2009/062739

The international date of the corresponding PCT application(s) is/are: October 30, 2009

I. List of Required Documents:

a. **A copy of the latest international work product (WO/ISA, WO/IPEA, or IPER) in the above–identified corresponding PCT application(s)**

☐ Is attached.

☒ Is not attached because the document is already in the U.S. application.

b. **A copy of all claims which were indicated as having novelty, inventive step and industrial applicability in the above-identified corresponding PCT application(s).**

☒ Is attached.

☐ Is not attached because the document is already in the U.S. application.

c. **English translations of the documents in a. and b. above are attached (if the documents are not in the English language). A statement that the English translation is accurate is attached for the document in b. above.**

This collection of information is required by 35 U.S.C. 119, 37 CFR 1.55, and 37 CFR 1.102(d). The information is required to obtain or retain a benefit by the public, which is to file (and by the USPTO to process) an application. Confidentiality is governed by 35 U.S.C. 122 and 37 CFR 1.11 and 1.14. This collection is estimated to take 2 hours to complete, including gathering, preparing, and submitting the completed application form to the USPTO. Time will vary depending upon the individual case. Any comments on the amount of time you require to complete this form and/or suggestions for reducing this burden should be sent to the Chief Information Officer, U.S. Patent and Trademark Office, U.S. Department of Commerce, P.O. Box 1450, Alexandria, VA 22313-1450. DO NOT SEND FEES OR COMPLETED FORMS TO THIS ADDRESS.

Approved for use through 01/31/2012. OMB 0651-0058
U.S.Patent and Trademark Office; U.S. DEPARTMENT OF COMMERCE

Under the Paperwork Reduction Act of 1995, no persons are required to respond to a collection of information unless it displays a valid OMB control number.

REQUEST FOR PARTICIPATION IN THE PCT-PPH PILOT PROGRAM BETWEEN THE KIPO AND THE USPTO

(continued)

Application No.:	12/609,226
First Named Inventor:	Kevin Thimmesch

d. **(1) An information disclosure statement listing the documents cited in the international work products (ISR, WO/ISA, WO/IPEA, IPER) of the corresponding PCT application.**

☐ Is attached

☒ Has already been filed in the above-identified U.S. application on October 6, 2010

(2) Copies of all documents (except) for U.S. patents or U.S. patent application publications)

☒ Are attached.

Have already been filed in the above-identified U.S. application on October 6, 2010

II. Claims Correspondence Table:

Claims in US Application	Patentable Claims in the corresponding PCT Application	Explanation regarding the correspondence
1-21	1-21	Identical set of claims filed in both applications

III. All the claims in the US application sufficiently correspond to the patentable claims in the corresponding PCT application.

Signature Tracy Bornman	Date 1/28/11
Name (Print/Typed) Tracy Bornman	Registration Number 42,347

UNITED STATES PATENT AND TRADEMARK OFFICE

UNITED STATES DEPARTMENT OF COMMERCE
United States Patent and Trademark Office
Address: COMMISSIONER FOR PATENTS
P.O. Box 1450
Alexandria, Virginia 22313-1450
www.uspto.gov

APPLICATION NO.	FILING DATE	FIRST NAMED INVENTOR	ATTORNEY DOCKET NO.	CONFIRMATION NO.
12/609,226	10/30/2009	Kevin Thimmesch	39933	7979

23589 7590 02/16/2011
Hovey Williams LLP
10801 Mastin Blvd., Suite 1000
Overland Park, KS 66210

EXAMINER
BARRY, CHESTER T

ART UNIT	PAPER NUMBER
1776	

MAIL DATE	DELIVERY MODE
02/16/2011	PAPER

Please find below and/or attached an Office communication concerning this application or proceeding.

The time period for reply, if any, is set in the attached communication.

UNITED STATES PATENT AND TRADEMARK OFFICE

Commissioner for Patents
United States Patent and Trademark Office
P.O. Box 1450
Alexandria, VA 22313-1450
www.uspto.gov

CT

February 16, 2011

In re application of	:	DECISION ON REQUEST TO
Kevin Thimmesch et al	:	PARTICIPATE IN PATENT
Serial No. 12/609,226	:	PROSECUTION HIGHWAY
Filed: October 30, 2009	:	PROGRAM AND
For: BLENDED SALT COMPOSITION	:	PETITION TO MAKE SPECIAL
AND METHOD OF USING	:	UNDER 37 CFR 1.102(a)

This is a decision on the supplemental request to participate in the PCT Patent Prosecution Highway (PCT-PPH) pilot program and the petition under 37 CFR 1.102(a), filed January 28, 2011, to make the above-identified application special.

The request and petition are **GRANTED**.

A grantable request to participate in the PCT-PPH pilot program and petition to make special require:

(1) The U.S. application must disclose an eligible relationship to one or more PCT applications where the ISA or IPEA are the JPO, EPO, USPTO or KIPO;

(2) At least one claim in the PCT application has novelty, inventive step, and industrial applicability and must be free of any observations in Box VIII in the latest work product in the international stage or applicant must identify and explain why the claim(s) is/are not subject to the observation in Box VIII;

(3) Applicant must submit a copy of the claim(s) from the PCT application(s) that have novelty, inventive step, and industrial applicability along with an English translation thereof and a statement that the English translation is accurate, if the claims are not in the English language;

(4) Applicant must submit a claims correspondence table in English and all the independent claims in the U.S. application must sufficiently correspond or be amended to sufficiently correspond to the claim(s) that have novelty, inventive step, and industrial applicability in the PCT application(s);

(5) Examination of the U.S. application has not begun;

(6) Applicant must submit a copy of the latest international work product from the PCT application indicating that the claim(s) have novelty, inventive step, and industrial applicability along with an English translation thereof if the latest international work product is not in the English language; and

(7) Applicant must submit an IDS listing the documents cited by the PCT examiner in the international work product along with copies of documents except U.S. patents or U.S. patent application publications.

The request to participate in the PPH program and petition comply with the above requirements. Accordingly, the above-identified application has been accorded "special" status.

The application is being forwarded to the examiner for action on the merits commensurate with this decision.

Any inquiry regarding this decision should be directed to Christine Tierney, Quality Assurance Specialist, at (571) 272-1055.

All other inquiries concerning the examination or status of the application is accessible in the PAIR system at http://www.uspto.gov/ebc/index.html.

/Christine Tierney/

Christine Tierney
Quality Assurance Specialist
Technology Center 1700

UNITED STATES PATENT AND TRADEMARK OFFICE

UNITED STATES DEPARTMENT OF COMMERCE
United States Patent and Trademark Office
Address: COMMISSIONER FOR PATENTS
P.O. Box 1450
Alexandria, Virginia 22313-1450
www.uspto.gov

APPLICATION NO.	FILING DATE	FIRST NAMED INVENTOR	ATTORNEY DOCKET NO.	CONFIRMATION NO.
12/609,256	10/30/2009	Hitoshi TANBO	1131-0636PUS1	8035

2292 7590 03/26/2012
BIRCH STEWART KOLASCH & BIRCH
PO BOX 747
FALLS CHURCH, VA 22040-0747

EXAMINER
COLLINS, RAVEN

ART UNIT	PAPER NUMBER
3788	

NOTIFICATION DATE	DELIVERY MODE
03/26/2012	ELECTRONIC

Please find below and/or attached an Office communication concerning this application or proceeding.

The time period for reply, if any, is set in the attached communication.

Notice of the Office communication was sent electronically on above-indicated "Notification Date" to the following e-mail address(es):

mailroom@bskb.com

UNITED STATES PATENT AND TRADEMARK OFFICE

Commissioner for Patents
United States Patent and Trademark Office
P.O. Box 1450
Alexandria, VA 22313-1450
www.uspto.gov

BIRCH STEWART KOLASCH & BIRCH
PO BOX 747
FALLS CHURCH VA 22040-0747

In re Application of:
TANBO, HITOSHI et al :
Appl. No.: 12/609,256 : DECISION ON PETITION
Filed: Oct. 30, 2009 :
Attorney Docket No. 1131-0636PUS1 :
For: PACKAGE OF ROD-SHAPED SMOKING ARTICLES AND A BLANK FOR THE PACKAGE

This is a decision on the petition filed on January 31, 2012 in which petitioner requests supervisory review and withdrawal of the finality of the Office action dated December 27, 2011. The petition is considered pursuant to 37 CFR § 1.181, and no fee is required.

The petition is dismissed.

A review of the relevant prosecution history shows that the applicant filed a RCE on December 6, 2011 with amendments to claims 1 and 6. The RCE was properly filed in accordance with 37 CFR § 1.114 and MPEP § 706.07(h). On December 27, 2011, the examiner issued a first Office action final rejection to the RCE. The examiner finally rejected all pending claims 1-10 under 35 U.S.C. §103(a). In particular, claims 1, 4 and 6 are rejected under 35 U.S.C. 103(a) as being unpatentable over Brizzi (U.S. 2003/0047471) in view of Wilder (U.S. 5,924,627) in view of Blink (U.S. D594,322). Claims 2, 3, 7 and 8 are rejected under 35 U.S.C. 103(a) as being unpatentable over Brizzi (U.S. 2003/0047471) in view of Wilder (U.S. 5,924,627) in view of Blink (U.S. D594,322) in view of Keiko (JP 2002/196862) 059001). Claim 5 is rejected under 35 U.S.C. 103(a) as being unpatentable over Brizzi (U.S. 2003/0047471) in view of Wilder (U.S. 5,924,627) in view of Blink (U.S. D594,322) in view of Sykes (U.S 4,655,366).

On January 31, 2012, the petitioner filed the current petition requesting supervisory review of the propriety of the final rejection and withdrawal of the finality of the office action dated December 27, 2011 pursuant to MPEP § 706.07(b). The petitioner is of the opinion that the first Office action final rejection of December 27, 2011 is improper under MPEP § 706.07(b) because

Petitioner is of opinion that the "submission" under 37 CFR § 1.114 functions to further distinguish the present invention from the prior art. Petitioner believes that if the subject matter of the submission was presented as a proposed amendment to the USPTO after the Final Rejection of the claims of the original application, the Examiner would have, in fact, denied entry based on the position that the proposed amendment would raise new issues, requiring further consideration and/or search. On pages 2-3 of the petition, petitioner also questions the propriety of the rejection because the prior art of Blick, Brizzi and Wilder are silent with respect to the technical concept specific to the present invention and the prior art patents do not teach or suggest the claimed invention, according Petitioner.

Analysis of Application Record

In the earlier final rejection of July 8, 2011, Claims 1, 4 and 6 are rejected under 35 U.S.C. 103(a) as being unpatentable over Brizzi (U.S. 2003/0047471) in view of Wilder (U.S. 5,924,627) in view of Blink (U.S. D594,322). Claims 2, 3, 7 and 8 are rejected under 35 U.S.C. 103(a) as being unpatentable over Brizzi (U.S. 2003/0047471) in view of Wilder (U.S. 5,924,627) in view of Blink (U.S. D594,322) in view of Keiko (JP 2002/196862) 059001). Claim 5 is rejected under 35 U.S.C. 103(a) as being unpatentable over Brizzi (U.S.2003/0047471) in view of Wilder (U.S. 5,924,627) in view of Blink (U.S. D594,322) in view of Sykes (U.S 4,655,366). In response to the final rejection of July 8, 2011, on December 6, 2011, the applicant filed the current RCE with amendments to independent claim 1 and dependent claim 6. Apparently, the claims as amended in the amendment of December 6, 2011 fail to structurally define over the prior art references. The first Office action final rejection was issued on December 27, 2011. This final rejection is based on the same prior art references under the same applicable statutes of 35 USC §103 with the same grounds of rejection as the previous final rejection mailed July 8, 2011. Petitioner opines that the amendment would not have been properly finally rejected on the grounds and art of record in the next Office action because the applicant believes that the "submission" under 37 CFR § 1.114 functions to further distinguish the present invention from the prior art. Petitioner believes that if the subject matter of the submission was presented as a proposed amendment to the USPTO after the Final Rejection of the claims of the original application, the Examiner would have, in fact, denied entry based on the position that the proposed amendment would raise new issues, requiring further consideration and/or search. This line of arguments is too speculative. It is noted that the amended claims 1 and 6 include the amended features related to, "reduced thickness between a bottom of the groove pattern and the outer surface of the rounded edge". On December 27, 2011, the Examiner issued a first Office action that was made final. On pages 3-4 of the final rejection of December 27, 2011, the examiner also provided detailed explanation as to how the claims are met by the prior art references. In the Response to Arguments, the examiner further stated that the added limitations to claims 1 and 6 are suggested or taught by Fig. 3c of Brizzi. Petitioner also questions the propriety of the rejection of the claims because the prior art references allegedly do not suggest and teach the claimed invention and the amended claims are distinguishable over the prior art references, according to Petitioner. The record shows that the examiner has determined that the December 6, 2011 amendment did not add any substantive limitations but merely changed the scope of what was previously claimed. In the final Office action of December 27, 2011, the examiner did consider the added limitations in the amended claims of December 6, 2011 and determined that the amended claims remain unpatentable for the

same grounds of rejection under 35 USC § 103 over the same prior art references as in the previous final rejection. In particular, in the December 27, 2011 final rejection, the examiner stated the claims of the amendment of December 6, 2011 that were filed in connection with the December 6, 2011 RCE were drawn to the same invention as previously claimed and could have been finally rejected on the same grounds and art of record of the next Office action if they had been entered in the earlier application. A comparison of the claims filed on December 6, 2011 and the amended claims of April 22, 2011 clearly shows the amendments to the claims are drawn to the same invention. The only substantial difference is that the amendment of December 6, 2011 slightly varies the scope of claims 1 and 6. The added limitations regarding "reduced thickness between a bottom of the groove pattern and the outer surface of the rounded edge" in claims 1 and 6 merely further define the location of the reduced thickness. Thus, the examiner issued a final rejection after RCE based on the same grounds of rejection over the prior art references of record pursuant to MPEP 706.07(b)[1]. The first action final rejection is proper.

Petitioner questions the propriety of the examiner's rejection of the claims regarding the added limitations. The disagreement with the examiner's position and the interpretation of the claim limitations as set forth in the petition is clearly appealable and is not a petitionable matter. As such, the disagreement will not be decided by this decision under 37 CFR § 1.181(a) (1)[2]. The issue presented here by petitioner is clearly directed to the propriety of the examiner's rejection of the claims under 35 U.S.C. §103. The question of whether claims 1-10 should be rejected under 35 U.S.C. § 103 or not is an appealable issue under 37 CFR 41.31(a) (1). After reviewing the final Office action of December 27, 2011, it is determined that the Office action does comply with USPTO rules and regulations. The Office action of December 27, 2011 stands. Petitioner is reminded that the period to respond to the outstanding final Office action remains unchanged.

Decision

Based on analysis of record, when the examiner promulgated the first Office action final rejection of December 27, 2011, the conditions set forth in MPEP § 706.07(b) were met. In particular, the amended claims in the amendment of December 6, 2011, in fact, are directed to the same invention as the claims in the earlier amendment filed on April 22, 2011, as indicated by the scope of the claims and the contents of the rejections. The claims in the amendment of December 6, 2011 would have been properly finally rejected on the same grounds and art of record in the next Office action if they had been filed earlier. Therefore, under MPEP § 706.07(b) the first action final rejection of December 27, 2011 is proper.

---

[1] MPEP 706.07(b), paragraph 2 states: >The claims of an application for which a request for continued examination (RCE) has been filed may be finally rejected in the action immediately subsequent to the filing of the RCE (with a submission and fee under 37 CFR 1.114) where all the claims in the application after the entry of the submission under 37 CFR 1.114 (A) are drawn to the same invention claimed in the application prior to the entry of the submission under 37 CFR 1.114, and (B) would have been properly finally rejected on the grounds and art of record in the next Office action if they had been entered in the application prior to the filing of the RCE under 37 CFR 1.114.<

[2] 37 CFR § 1.181 Petition to the Director. (a) Petition may be taken to the Director: (1)From any action or requirement of any examiner in the ex parte prosecution of an application, or in ex parte or inter partes prosecution of a reexamination proceeding which is not subject to appeal to the Board of Patent Appeals and Interferences or to the court;

For the foregoing reasons it appears that the examiner did not abuse his discretion, or act in an arbitrary or capricious manner, in making the December 27, 2011 Office action final. Therefore, there is no basis for granting any of the relief requested.

The application is being forwarded to the examiner via the Supervisory Patent Examiner of Art Unit 3788 awaiting a response to the outstanding Office action mailed on December 27, 2011. Petitioner may file a request for reconsideration of this decision, without fee. However, such request must be filed within two months of the date of this decision. See 37 CFR § 1.181(f). The mere filing of a petition will not stay any period for reply that may be running against the application, nor act as a stay of other proceedings. No extension of time under 37 CFR 1.136(a) is permitted.

Should petitioner have any further questions, he is invited to contact Henry Yuen, TC 3700 SPRE, at 571-272-4856.

PETITION DISMISSED

Andrew Wang, Director
Technology Center 3700

UNITED STATES PATENT AND TRADEMARK OFFICE

Commissioner for Patents
United States Patent and Trademark Office
P.O. Box 1450
Alexandria, VA 22313-1450
www.uspto.gov

Decision Date : March 7, 2012

In re Application of :

Man Choi

DECISION ON PETITION

UNDER CFR 1.313(c)(2)

Application No : 12609279

Filed : 30-Oct-2009

Attorney Docket No : HI-0347.01

This is an electronic decision on the petition under 37 CFR 1.313(c)(2), filed March 7, 2012 , to withdraw the above-identified application from issue after payment of the issue fee.

The petition is **GRANTED.**

The above-identified application is withdrawn from issue for consideration of a submission under 37 CFR 1.114 (request for continued examination). See 37 CFR 1.313(c)(2).

Petitioner is advised that the issue fee paid in this application cannot be refunded. If, however, this application is again allowed, petitioner may request that it be applied towards the issue fee required by the new Notice of Allowance.

Telephone inquiries concerning this decision should be directed to the Patent Electronic Business Center (EBC) at 866-217-9197.

This application file is being referred to Technology Center AU 2835 for processing of the request for continuing examination under 37 CFR 1.114 .

Office of Petitions

Doc Code: PET.AUTO Document Description: Petition automatically granted by EFS-Web	PTO/SB/140 U.S. Patent and Trademark Office Department of Commerce

Electronic Petition Request	**PETITION TO WITHDRAW AN APPLICATION FROM ISSUE AFTER PAYMENT OF THE ISSUE FEE UNDER 37 CFR 1.313(c)**
Application Number	12609279
Filing Date	30-Oct-2009
First Named Inventor	Man Choi
Art Unit	2835
Examiner Name	INGRID WRIGHT
Attorney Docket Number	HI-0347.01
Title	DISPLAY APPARATUS

An application may be withdrawn from issue for further action upon petition by the applicant. To request that the Office withdraw an application from issue, applicant must file a petition under this section including the fee set forth in § 1.17(h) and a showing of good and sufficient reasons why withdrawal of the application from issue is necessary.

APPLICANT HEREBY PETITIONS TO WITHDRAW THIS APPLICATION FROM ISSUE UNDER 37 CFR 1.313(c).

A grantable petition requires the following items:
(1) Petition fee; and
(2) One of the following reasons:
(a) Unpatentability of one or more claims, which must be accompanied by an unequivocal statement that one or more claims are unpatentable, an amendment to such claim or claims, and an explanation as to how the amendment causes such claim or claims to be patentable;
(b) Consideration of a request for continued examination in compliance with § 1.114 (for a utility or plant application only); or
(c) Express abandonment of the application. Such express abandonment may be in favor of a continuing application, but not a CPA under 37 CFR 1.53(d).

Petition Fee

☐ Applicant claims SMALL ENTITY status. See 37 CFR 1.27.

☐ Applicant is no longer claiming SMALL ENTITY status. See 37 CFR 1.27(g)(2).

☐ Applicant(s) status remains as SMALL ENTITY.

☒ Applicant(s) status remains as other than SMALL ENTITY

Reason for withdrawal from issue

○ One or more claims are unpatentable

◉ Consideration of a request for continued examination (RCE) (List of Required Documents and Fees)

○ Applicant hereby expressly abandons the instant application (any attorney/agent signing for this reason must have power of attorney pursuant to 37 CFR 1.32(b)).

RCE request,submission, and fee.

☐ I certify, in accordance with 37 CFR 1.4(d)(4) that : The RCE request ,submission, and fee have already been filed in the above-identified application on

☒ Are attached.

THIS PORTION MUST BE COMPLETED BY THE SIGNATORY OR SIGNATORIES

I certify, in accordance with 37 CFR 1.4(d)(4) that I am:

◉ An attorney or agent registered to practice before the Patent and Trademark Office who has been given power of attorney in this application.

○ An attorney or agent registered to practice before the Patent and Trademark Office, acting in a representative capacity.

○ A sole inventor

○ A joint inventor; I certify that I am authorized to sign this submission on behalf of all of the inventors

○ A joint inventor; all of whom are signing this e-petition

○ The assignee of record of the entire interest that has properly made itself of record pursuant to 37 CFR 3.71

Signature	/David C. Oren/
Name	David C. Oren
Registration Number	38694

UNITED STATES PATENT AND TRADEMARK OFFICE

Commissioner for Patents
United States Patent and Trademark Office
P.O. Box 1450
Alexandria, VA 22313-1450
www.uspto.gov

KRATZ, QUINTOS & HANSON, LLP
1420 K STREET, N.W.
4TH FLOOR
WASHINGTON, DC 20005

MAILED
AUG 24 2011
OFFICE OF PETITIONS

In re Application of :
Koichi Masuzawa, et al :
Application No.: 12/609,293 : ON PETITION
Filed: October 30, 2009 :
Attorney Docket No.: 090283 :

This is a decision on the petition, filed August 17, 2011, under 37 CFR 1.313(c)(2) to withdraw the above-identified application from issue after payment of the issue fee.

The petition is **GRANTED**.

The above-identified application is withdrawn from issue for consideration of a submission under 37 CFR 1.114 (request for continued examination). See 37 CFR 1.313(c)(2).

Petitioner is advised that the issue fee paid on August 5, 2011, cannot be refunded. If, however, this application is again allowed, petitioner may request that it be applied towards the issue fee required by the new Notice of Allowance.[1]

Telephone inquiries relating to this decision should be directed to the undersigned at (571) 272-3204.

The application is being referred to Technology Center AU 2862 for further processing of the request for continued examination under 37 CFR 1.114 and for consideration of the concurrently filed Information Disclosure Statement (IDS).

/SDB/

Sherry D. Brinkley
Petitions Examiner
Office of Petitions

[1] *The request to apply the issue fee to the new Notice may be satisfied by completing and returning the new Part B – Fee(s) Transmittal Form (along with any balance due at the time of submission). Petitioner is advised that the Issue Fee Transmittal Form must be completed and timely submitted to avoid abandonment of the application.*

UNITED STATES PATENT AND TRADEMARK OFFICE

UNITED STATES DEPARTMENT OF COMMERCE
United States Patent and Trademark Office
Address: COMMISSIONER FOR PATENTS
P.O. Box 1450
Alexandria, Virginia 22313-1450
www.uspto.gov

APPLICATION NO.	FILING DATE	FIRST NAMED INVENTOR	ATTORNEY DOCKET NO.	CONFIRMATION NO.
12/609,301	10/30/2009	Minoru SHIBATA	26C-107	8130

7590 11/29/2010

POSZ LAW GROUP, PLC
12040 SOUTH LAKES DRIVE
SUITE 101
RESTON, VA 20191

EXAMINER
AMORES, KAREN J

ART UNIT	PAPER NUMBER
3616	

MAIL DATE	DELIVERY MODE
11/29/2010	PAPER

DECISION GRANTING PETITION UNDER 37 CFR 1.138(d)

The declaration of express abandonment is recognized

This is in response to the petition under 37 CFR 1.138(d), requesting for a refund of any previously paid search fee and excess claims fee in the above-identified application.

The petition is granted.

The express abandonment is recognized. Any previously paid search fee and excess claims fee are hereby refunded.

Telephone inquiries should be directed to the Office of Data Management at (571) 272-4200.

Patent Publication Branch
Office of Data Management

Adjustment date: 11/29/2010 NAMANER
10/30/2009 INTERSW 00013475 501147 12609301
02 FC:1111 540.00 CR

FORM PET651G (Rev. 08/07)

UNITED STATES PATENT AND TRADEMARK OFFICE

Commissioner for Patents
United States Patent and Trademark Office
P.O. Box 1450
Alexandria, VA 22313-1450
www.uspto.gov
DIW Sep-10

VEDDER PRICE PC
222 NORTH LASALLE STREET
CHICAGO, IL 60601

MAILED

SEP 22 2010

OFFICE OF PETITIONS

In re Application of	:	
Hasson, El Mokhtari, Hurley,	:	DECISION REFUSING STATUS
Kitson and Walker	:	UNDER 37 CFR 1.47(a)
Application No.: 12/609,313	:	
Filed: October 30, 2009	:	
Atty Docket No.: 33836.98.0008	:	

This is a decision in response to the petition, filed June 17, 2010, under the provisions of 37 CFR 1.47(a).

The petition is **DISMISSED**.

Rule 47 applicant is given TWO MONTHS from the mailing date of this decision to reply, correcting the below-noted deficiencies. Any reply should be entitled "Request for Reconsideration of Petition Under 37 CFR 1.47(a)," and should only address the deficiencies noted below, except that the reply may include an oath or declaration executed by the non-signing inventor. **FAILURE TO RESPOND WILL RESULT IN ABANDONMENT OF THE APPLICATION.** Extensions of time may be obtained in accordance with 37 CFR 1.136(a).

The above-identified application was filed on October 30, 2009, without an executed oath or declaration. Accordingly, on November 18, 2009, the Office of Data Management, Application Assistance Unit mailed a Notice to File Missing Parts of Nonprovisional Application, requiring an executed oath or declaration and a surcharge for it's late filing.

On June 17, 2010, petitioners filed the present petition and fee, the requisite surcharge, an executed declaration and an appropriate petition for extension of time for five (5) months. Petitioners assert that the application was sent to Kerry Hurley, the non-signing inventor, at his last known address by courier; however, the delivery was not completed due to the unavailability of Mr. Hurley at the time of delivery.

A grantable petition under 37 CFR 1.47(a) requires:

(1) proof that the non-signing inventor cannot be reached or located, notwithstanding diligent effort, or refuses to sign the oath or declaration after having been presented with the application papers (specification, claims and drawings);

(2) an acceptable oath or declaration in compliance with 35 U.S.C. §§ 115 and 116;

(3) the petition fee;

(4) a surcharge of $130 or $65 (small entity) if the petition and/or declaration is not filed at the time of filing the application, and

(5) a statement of the last known address of the non-signing inventor.

The petition lacks items (1).

The applicable statute (35 U.S.C.§ 116) requires that a "diligent effort" have been expended in attempting to find or reach the non-signing inventor. *See* MPEP 409.03(a). The showing currently fails to demonstrate, with a documented showing, that a diligent effort was made to reach non-signing inventor, such that the declaration can be accepted under 37 CFR 1.47(a).

Petitioner is reminded that before a *bona fide* refusal to sign the declaration can be alleged, petitioners must show that a copy of the application was sent or given to the inventor. The petition fails to indicate that correspondence was ever given or mailed unsuccessfully to the inventor's last known address. Therefore, at the very least, petitioner should mail correspondence to the inventor's last known address, return receipt and/or forwarding address requested. This sort of ultimatum lends support to a finding of refusal by conduct.

Where there is an express or oral refusal, that fact, along with the time and place of the refusal, must be stated in an affidavit or declaration by the party to whom the refusal was made. Where there is a written refusal, a copy of the document(s) evidencing that refusal must be made part of the affidavit or declaration.

When it is concluded by the rule 47 applicant that an omitted inventor's conduct constitutes a refusal, all facts upon which that conclusion is based should be stated in an affidavit or declaration. If there is documentary evidence to support facts alleged in the affidavit or declaration, such evidence must be submitted.

Whenever an omitted inventor gives a reason for refusing to sign the application oath or declaration, that reason should be stated in the affidavit or declaration.

If repeated attempts to contact the non-signing inventor are unsuccessful, petitioners will have demonstrated that the inventors cannot be reached, despite diligent efforts, or have refused to sign the declaration.

Further correspondence with respect to this matter should be delivered through one of the following mediums:

By mail: Mail Stop PETITIONS
Commissioner for Patents
Post Office Box 1450
Alexandria, VA 22313-1450

By hand: Customer Service Window
Mail Stop Petitions
Randolph Building
401 Dulany Street
Alexandria, VA 22314

By fax: (571) 273-8300
ATTN: Office of Petitions

By Internet: EFS-Web[1]

Any questions concerning this matter may be directed to the undersigned at (571) 272-3204.

Sherry D. Brinkley
Petitions Examiner
Office of Petitions

[1] www.uspto.gov/ebc/efs help.html (for help using EFS-Web call the Patent Electronic Business Center at (866) 217-9197)

UNITED STATES PATENT AND TRADEMARK OFFICE

Commissioner for Patents
United States Patent and Trademark Office
P.O. Box 1450
Alexandria, VA 22313-1450
www.uspto.gov

MAILED

MAR 09 2011

OFFICE OF PETITIONS

VEDDER PRICE PC
222 NORTH LASALLE STREET
CHICAGO, IL 60601

In re Application of Robert Hasson, et al. Application No. 12/609,313 Filed: October 30, 2009 Attorney Docket No.: 33836.98.0008	: : : : :	DECISION ACCORDING STATUS UNDER 37 CFR 1.47(a)

This is a decision in response to the renewed petition under 37 CFR 1.47(a) filed January 24, 2011.

The petition is **GRANTED**.

Petitioner has shown that the non-signing inventor, Kerry Hurley, has refused to join in the filing of the above-identified application.

The application and papers have been reviewed and found to be in compliance with 37 CFR 1.47(a). This application is hereby accorded Rule 1.47(a) status.

As provided in 37 CFR 1.47(c), this Office will forward notice of this application's filing to the non-signing inventor at the address given in the petition. Notice of the filing of this application will also be published in the Official Gazette.

The application file is being forwarded to Technology Center 3685 for prosecution in due course.

Telephone inquiries regarding this decision should be directed to the undersigned at (571) 272-3204.

/SDB/

Sherry D. Brinkley
Petitions Examiner
Office of Petitions

UNITED STATES PATENT AND TRADEMARK OFFICE

Commissioner for Patents
United States Patent and Trademark Office
P.O. Box 1450
Alexandria, VA 22313-1450
www.uspto.gov

MR. KERRY HURLEY
30 GREAT PERCY STREET
LONDON WC1S9QR
UNITED KINGDOM

MAILED
MAR 09 2011
OFFICE OF PETITIONS

In re Application of	:	
Robert Hasson, et al.	:	
Application No.: 12/609,313	:	LETTER
Filed: October 30, 2009	:	
For: SYSTEM FOR CONTROLLING USER ACCESS	:	
TO A SERVICE	:	

Dear Mr. Hurley:

You are named as a joint inventor in the above-identified United States patent application filed under the provisions of 35 U.S.C. 116 (United States Code) and 37 CFR 1.47(a), Rules of Practice in Patent Cases. Should a patent be granted on the application you will be designated therein as a joint inventor.

As a named inventor you are entitled to inspect any paper in the file wrapper of the application, order copies of all or any part thereof (at a prepaid cost per 37 CFR 1.19) or make your position of record in the application. Alternatively, you may arrange to do any of the preceding through a registered patent attorney or agent presenting written authorization from you. If you care to join the application, counsel of record (see below) would presumably assist you. Joining in the application would entail the filing of an appropriate oath or declaration by you pursuant to 37 CFR 1.63.

Telephone inquiries regarding this communication should be directed to the undersigned at (571) 272-3204. Requests for information regarding your application should be directed to the File Information Unit at (703) 308-2733. Information regarding how to pay for and order a copy of the application, or a specific paper in the application should be directed to the Certification Division at (703) 308-9726 or 1-800-972-6382 (outside the Washington D.C. area).

/SDB/

Sherry D. Brinkley
Petitions Examiner
Office of Petitions

cc: VEDDER PRICE PC
222 NORTH LASALLE STREET
CHICAGO, IL 60601

Doc Code: PET.GREEN
Document Description: Petition for Green Tech Pilot

PTO/SB/420 (11-10)
Approved for use through 01/31/2011. OMB 0651-0062
U.S. Patent and Trademark Office; U. S. DEPARTMENT OF COMMERCE
Under the Paperwork Reduction Act of 1995, no persons are required to respond to a collection of information unless it displays a valid OMB control number.

PETITION TO MAKE SPECIAL UNDER THE GREEN TECHNOLOGY PILOT PROGRAM

Attorney Docket Number: 81185488/FMC2417PUS	Application Number (if known): 12/609,366	Filing date: October 30, 2009
First Named Inventor: Michael Jon Veenstra		
Title: TANK ASSEMBLY COLLAR MOUNT		

APPLICANT HEREBY REQUESTS TO PARTICIPATE IN THE GREEN TECHNOLOGY PILOT PROGRAM FOR THE ABOVE-IDENTIFIED APPLICATION. See Instruction Sheet on page 2.

This petition must be timely filed electronically using the USPTO electronic filing system, EFS-Web.

1. By filing this petition:

   Applicant is requesting early publication: Applicant hereby requests early publication under 37 CFR 1.219 and the publication fee set forth in 37 CFR 1.18(d) accompanies this request.

2. By filing this petition: applicant is agreeing to make an election without traverse in a telephonic interview and elect an invention that meets the eligibility requirements for the Green Technology Pilot Program, if the Office determines that the claims are not obviously directed to a single invention. See Instruction Sheet.

3. This request is accompanied by statements of special status for the eligibility requirement.

4. The application contains no more than three (3) independent claims and twenty (20) total claims.

5. The application does not contain any multiple dependent claims.

6. Other attachments: Statement to Make Special

Signature /Martin J. Sultana/	Date 03/11/2011
Name (Print/Typed) Martin J. Sultana	Registration Number 57,739

Note: *Signatures of all the inventors or assignees of record of the entire interest or their representative(s) are required in accordance with 37 CFR 1.33 and 11.18. Please see 37 CFR 1.4(d) for the form of the signature. If necessary, submit multiple forms for more than one signature see below*.*

☒ *Total of 1 forms are submitted.

The information is required to obtain or retain a benefit by the public which is to file (and by the USPTO to process) an application. Confidentiality is governed by 35 U.S.C. 122 and 37 CFR 1.11 and 1.14. This collection is estimated to take 12 hours to complete, including gathering, preparing, and submitting the completed application form to the USPTO. Time will vary depending upon the individual case. Any comments on the amount of time you require to complete this form and/or suggestions for reducing this burden, should be sent to the Chief Information Officer, U.S. Patent and Trademark Office, U.S. Department of Commerce, P.O. Box 1450, Alexandria, VA 22313-1450. DO NOT SEND FEES OR COMPLETED FORMS TO THIS ADDRESS. **SEND TO: Commissioner for Patents, P.O. Box 1450, Alexandria, VA 22313-1450.**

If you need assistance in completing the form, call 1-800-PTO-9199 and select option 2.

Under the Paperwork Reduction Act of 1995, no persons are required to respond to a collection of information unless it displays a valid OMB control number.

Instruction Sheet for Petition to Make Special Under the Green Technology Pilot Program

(Not to be Submitted to the USPTO)

The following is a summary of the requirements (for more information see the notices (i) "Pilot Program for Green Technologies Including Greenhouse Gas Reduction," (ii) "Elimination of Classification Requirement in the Green Technology Pilot Program," and (iii) "Expansion and Extension of the Green Technology Pilot Program," available on the USPTO web site at http://www.uspto.gov/patents/init_events/green_tech.jsp):

1) The application must be a non-reissue, non-provisional utility application filed under 35 U.S.C. 111 (a), or an international application that has entered the national stage in compliance with 35 U.S.C. 371, irrespective of the filing date of the application. Reexamination proceedings are excluded from this pilot program.

2) The application must contain three or fewer independent claims and twenty or fewer total claims. The application must not contain any multiple dependent claims. For an application that contains more than three independent claims or twenty total claims, or multiple dependent claims, applicant must file a preliminary amendment in compliance with 37 CFR 1.121 to cancel the excess claims and/or the multiple dependent claims at the time the petition to make special is filed.

3) The claims must be directed to a single invention that materially enhances the quality of the environment, or that materially contributes to: (1) the discovery or development of renewable energy resources; (2) the more efficient utilization and conservation of energy resources; or (3) green house gas emission reduction (see the eligibility requirements of sections II and III of the notice (i) cited above). The petition must include a statement that, if the USPTO determines that the claims are directed to multiple inventions (e.g., in a restriction requirement), applicant will agree to make an election without traverse in a telephonic interview, and elect an invention that meets the eligibility requirements in section II or III of the notice (i) cited above.

4) The petition to make special must be timely filed electronically using the USPTO electronic filing system, EFS-Web, and selecting the document description of "Petition for Green Tech Pilot" on the EFS-Web screen. Applicant should use form PTO/SB/420, which is available as a Portable Document Format (PDF) fillable form in EFS-Web and on the USPTO Web site.

5) The petition to make special must be filed at least one day prior to the date that a first Office action (which may be an Office action containing only a restriction requirement) appears in the Patent Application Information Retrieval (PAIR) system. Applicant may check the status of the application using PAIR.

6) The petition to make special must be accompanied by a request for early publication in compliance with 37 CFR 1.219 and the publication fee set forth in 37 CFR 1.18(d).

Privacy Act Statement

The **Privacy Act of 1974 (P.L. 93-579)** requires that you be given certain information in connection with your submission of the attached form related to a patent application or patent. Accordingly, pursuant to the requirements of the Act, please be advised that: (1) the general authority for the collection of this information is 35 U.S.C. 2(b)(2); (2) furnishing of the information solicited is voluntary; and (3) the principal purpose for which the information is used by the U.S. Patent and Trademark Office is to process and/or examine your submission related to a patent application or patent. If you do not furnish the requested information, the U.S. Patent and Trademark Office may not be able to process and/or examine your submission, which may result in termination of proceedings or abandonment of the application or expiration of the patent.

The information provided by you in this form will be subject to the following routine uses:

1. The information on this form will be treated confidentially to the extent allowed under the Freedom of Information Act (5 U.S.C. 552) and the Privacy Act (5 U.S.C 552a). Records from this system of records may be disclosed to the Department of Justice to determine whether disclosure of these records is required by the Freedom of Information Act.
2. A record from this system of records may be disclosed, as a routine use, in the course of presenting evidence to a court, magistrate, or administrative tribunal, including disclosures to opposing counsel in the course of settlement negotiations.
3. A record in this system of records may be disclosed, as a routine use, to a Member of Congress submitting a request involving an individual, to whom the record pertains, when the individual has requested assistance from the Member with respect to the subject matter of the record.
4. A record in this system of records may be disclosed, as a routine use, to a contractor of the Agency having need for the information in order to perform a contract. Recipients of information shall be required to comply with the requirements of the Privacy Act of 1974, as amended, pursuant to 5 U.S.C. 552a(m).
5. A record related to an International Application filed under the Patent Cooperation Treaty in this system of records may be disclosed, as a routine use, to the International Bureau of the World Intellectual Property Organization, pursuant to the Patent Cooperation Treaty.
6. A record in this system of records may be disclosed, as a routine use, to another federal agency for purposes of National Security review (35 U.S.C. 181) and for review pursuant to the Atomic Energy Act (42 U.S.C. 218(c)).
7. A record from this system of records may be disclosed, as a routine use, to the Administrator, General Services, or his/her designee, during an inspection of records conducted by GSA as part of that agency's responsibility to recommend improvements in records management practices and programs, under authority of 44 U.S.C. 2904 and 2906. Such disclosure shall be made in accordance with the GSA regulations governing inspection of records for this purpose, and any other relevant (*i.e.*, GSA or Commerce) directive. Such disclosure shall not be used to make determinations about individuals.
8. A record from this system of records may be disclosed, as a routine use, to the public after either publication of the application pursuant to 35 U.S.C. 122(b) or issuance of a patent pursuant to 35 U.S.C. 151. Further, a record may be disclosed, subject to the limitations of 37 CFR 1.14, as a routine use, to the public if the record was filed in an application which became abandoned or in which the proceedings were terminated and which application is referenced by either a published application, an application open to public inspection or an issued patent.
9. A record from this system of records may be disclosed, as a routine use, to a Federal, State, or local law enforcement agency, if the USPTO becomes aware of a violation or potential violation of law or regulation.

UNITED STATES PATENT AND TRADEMARK OFFICE

UNITED STATES DEPARTMENT OF COMMERCE
United States Patent and Trademark Office
Address: COMMISSIONER FOR PATENTS
P.O. Box 1450
Alexandria, Virginia 22313-1450
www.uspto.gov

APPLICATION NO.	FILING DATE	FIRST NAMED INVENTOR	ATTORNEY DOCKET NO.	CONFIRMATION NO.
12/609,366	10/30/2009	Michael Jon Veenstra	81185488	8240

28395 7590 03/22/2011
BROOKS KUSHMAN P.C./FGTL
1000 TOWN CENTER
22ND FLOOR
SOUTHFIELD, MI 48075-1238

EXAMINER

ART UNIT	PAPER NUMBER
3781	

MAIL DATE	DELIVERY MODE
03/22/2011	PAPER

Please find below and/or attached an Office communication concerning this application or proceeding.

The time period for reply, if any, is set in the attached communication.

UNITED STATES PATENT AND TRADEMARK OFFICE

Commissioner for Patents
United States Patent and Trademark Office
P.O. Box 1450
Alexandria, VA 22313-1450
www.uspto.gov

BROOKS KUSHMAN P.C./FGTL
1000 TOWN CENTER
22ND FLOOR
SOUTHFIELD MI 48075-1238

In re Application of	:	
VEENSTRA, MICHAEL JON	:	DECISION ON PETITION
Application No. 12/609,366	:	TO MAKE SPECIAL UNDER
Filed: Oct. 30, 2009	:	THE GREEN TECHNOLOGY
Attorney Docket No. 81185488	:	PILOT PROGRAM

This is a decision on the petition under 37 CFR 1.102, filed March 11, 2011, to make the above-identified application special under the pilot program for applications pertaining to Green Technologies as set forth in 74 Federal Register Notice 64666 (December 8, 2009) and amended by 75 Federal Register Notice 28554 (May 21, 2010) and 75 Federal Register Notice 69049 (November 10, 2010).

The petition is **dismissed**.

If reconsideration of this decision is desired, a petition for reconsideration must be filed within ONE (1) MONTH OR THIRTY (30) DAYS from the mail date of this decision, whichever is longer. No extension of this time limit can be granted under 37 CFR 1.136(a) or (b). The petition for reconsideration should include an exhaustive attempt to provide the lacking item(s) noted below, since, after a decision on the petition for reconsideration, no further reconsideration or review of the matter will be undertaken by the Director.

A grantable petition to make an application special under 37 CFR 1.102 and the pilot program as set forth in 74 FR 64666 must be directed to a nonprovisional application filed under 35 USC 111(a) or be a national stage entry under 35 USC 371, exclusive of any reissue applications.

In order to qualify for special status, the following requirements must be met. 1) The application must have no more than 3 independent claims and no more than 20 total claims. 2) The application must not contain any multiple dependent claims. 3) The petition must state the basis for seeking special status, i.e., the claimed invention either: A) materially enhances the quality of the environment or B) materially contributes to: i) the discovery or development of renewable energy resources, ii) the more efficient utilization and conservation of energy resources, or iii) greenhouse gas emission reduction. 4) If the disclosure is not clear on its face that the claimed invention materially contributes under category (A) or (B), the petition must be accompanied by a statement by the applicant, assignee, or an attorney/agent registered to practice before the Office explaining how the materiality standard is met. 5) A statement that applicant will agree to

make an election without traverse in a telephonic interview if a restriction requirement is made by the examiner. 6) The petition to make special must be filed electronically. 7) The petition must be filed at least one day prior to the date that a first Office Action appears in the Patent Application Information Retrieval (PAIR) system. 8) The petition must be accompanied by a request for early publication in compliance with 37 CFR 1.219 and include the publication fee as set forth in 37 CFR 1.18(d).

The requirement for a fee for consideration of the petition to make special for applications pertaining to Green Technologies has been waived. The petition lacks item # 4.

In regard to item 4, petitioner should note that the instant petition includes a statement identifying the basis for the special status (i.e., whether the instant invention (1) materially enhances the quality of the environment or materially contributes to (2) development of renewable energy resources or energy conservation, or (3) greenhouse gas reduction) as required by sections II and III of the notice. However, as stated in the notice, applicant must also provide a statement pertaining to the materiality standard if the application disclosure is not clear on its face as to the materiality of the basis for the special status of the invention. This petition lacks such a statement and it is not agreed that the application on its face meets that materiality standard. For example, it is not clear how the claimed tank assembly with a liner will provide and enhance the quality of the environment or contribute to energy conservation or greenhouse gas reduction. It is also noted claim 1 has nothing to do with enhancement of the quality of the environment or contribution to energy conservation or greenhouse gas reduction.

Any reconsideration of this decision should be submitted through the USPTO electronic filing system, EFS-Web, and selecting the document description of "Petition for Green Tech Pilot" on the EFS-Web screen.

Telephone inquiries concerning this decision should be directed to Henry C. Yuen at 571-272-4856.

The application is currently undergoing pre-examination processing. The application will be forwarded to the Technology Center Art Unit 3781 for action in its regular turn.

/Henry C. Yuen/

Henry C. Yuen
Quality Assurance Specialist
Technology Center 3700

UNITED STATES PATENT AND TRADEMARK OFFICE

Commissioner for Patents
United States Patent and Trademark Office
P.O. Box 1450
Alexandria, VA 22313-1450
www.uspto.gov

PATTON BOGGS LLP
8484 WESTPARK DRIVE
SUITE 900
MCLEAN VA 22102

MAILED

FEB 27 2012

OFFICE OF PETITIONS

In re Application of
Eric T. Marple et al.
Application No. 12/609,472
Filed: October 30, 2009
Attorney Docket No. 022720.0177PTUS

DECISION ON PETITION
TO WITHDRAW
FROM RECORD

This is a decision on the Request to Withdraw as attorney or agent of record under 37 C.F.R. § 1.36(b), filed February 10, 2012.

The request is **NOT APPROVED.**

The Office will no longer accept address changes to a new practitioner or law firm filed with a Request, absent the filing of a power of attorney to the new representative. The Office will either change the correspondence address of record to the most current address information provided for the assignee of the entire interest who properly became of record under 37 CFR 3.71 or, if no assignee of the entire interest has properly been made of record under 37 CFR 3.71, the most current address information provided for the first named inventor.

Accordingly, the request to withdraw from record cannot be approved because a proper forwarding address was not provided. The request to change the correspondence address should be that of the: (1) the first named signing inventor; or (2) an assignee of the entire interest under 37 C.F.R 3.71. If an assignee has intervened in this application then a Statement under 37 CFR 3.73(b), or a copy of the actual assignment must be submitted with a renewed request.

According to the records an assignment was recorded on January 19, 2010. In order to change the correspondence address and grant the request to withdraw from record, a copy of the actual assignment or a statement under 37 CFR 3.73(b), must be submitted.

All future communications from the Office will continue to be directed to the above-identified address until otherwise properly notified.

Telephone inquiries concerning this decision should be directed to the undersigned at 571-272-4618.

/Kimberly Inabinet/

Kimberly Inabinet
Petitions Examiner
Office of Petitions

SPE RESPONSE FOR CERTIFICATE OF CORRECTION

Paper No.: _____

DATE : 03-09-11

TO SPE OF : ART UNIT 1734

SUBJECT : Request for Certificate of Correction for Appl. No.: 12/609491 Patent No.: 7829053

CofC mailroom date: 02-24-11

Please respond to this request for a certificate of correction within 7 days.

FOR IFW FILES:

Please review the requested changes/corrections as shown in the **COCIN** document(s) in the IFW application image. No new matter should be introduced, nor should the scope or meaning of the claims be changed.

Please complete the response (see below) and forward the completed response to scanning using document code **COCX**.

FOR PAPER FILES:

Please review the requested changes/corrections as shown in the attached certificate of correction. Please complete this form (see below) and forward it with the file to:

Certificates of Correction Branch (CofC)
Randolph Square – 9D10-A
Palm Location 7580

Angela Green
Certificates of Correction Branch
(703) 756-1541

Thank You For Your Assistance

The request for issuing the above-identified correction(s) is hereby:
Note your decision on the appropriate box.

- ☑ **Approved** — **All** changes apply.
- ☐ **Approved in Part** — Specify below which changes **do not** apply.
- ☐ **Denied** — State the reasons for denial below.

Comments: _____

SPE /Emily M. Le/ **Art Unit** 1734

UNITED STATES PATENT AND TRADEMARK OFFICE

Commissioner for Patents
United States Patent and Trademark Office
P.O. Box 1450
Alexandria, VA 22313-1450
www.uspto.gov

CHOATE, HALL & STEWART / CITRIX SYSTEMS, INC.
TWO INTERNATIONAL PLACE
BOSTON MA 02110

MAILED

DEC 06 2010

OFFICE OF PETITIONS

In re Application of	:	
Paul Ryman	:	
Application No. 12/609,615	:	DECISION ON PETITION
Filed: October 30, 2009	:	TO WITHDRAW
Attorney Docket No. 2006579-1837 (CTX-585)	:	FROM RECORD
	:	

This is a decision on the Request to Withdraw as attorney or agent of record under 37 C.F.R. § 1.36(b), filed November 10, 2010.

The request is **NOT APPROVED.**

The Office will no longer accept address changes to a new practitioner or law firm filed with a Request, absent the filing of a power of attorney to the new representative. The Office will either change the correspondence address of record to the most current address information provided for the assignee of the entire interest who properly became of record under 37 CFR 3.71 or, if no assignee of the entire interest has properly been made of record under 37 CFR 3.71, the most current address information provided for the first named inventor.

Accordingly, the request to withdraw from record cannot be approved because the request to change the correspondence address is not that of: (1) the first named inventor; or (2) an assignee of the entire interest under 37 C.F.R 3.71. If an assignee has ownership in this application, then a current Statement under 37 CFR 3.73(b) or a copy of the actual assignment must be provided with a renewed request.

All future communications from the Office will continue to be directed to the above-identified address until otherwise properly notified.

Telephone inquiries concerning this decision should be directed to the undersigned at 571-272-4618.

/Kimberly Inabinet/

Kimberly Inabinet
Petitions Examiner
Office of Petitions

UNITED STATES PATENT AND TRADEMARK OFFICE

Commissioner for Patents
United States Patent and Trademark Office
P.O. Box 1450
Alexandria, VA 22313-1450
www.uspto.gov

COOLEY LLP
ATTN: Patent Group
Suite 1100
777 - 6th Street, NW
WASHINGTON DC 20001

MAILED
MAY 20 2011
OFFICE OF PETITIONS

In re Application of	:	
Alexey J. Margolin et al.	:	
Application No. 12/609,650	:	DECISION ON PETITION
Filed: October 30, 2009	:	TO WITHDRAW
Attorney Docket No. **ALTH-010/06US 307255-2146**	:	FROM RECORD

This is a decision on the Request to Withdraw as attorney or agent of record under 37 CFR § 1.36(b), filed May 9, 2011.

The request is **APPROVED**.

A grantable request to withdraw as attorney/agent of record must be signed by every attorney/agent seeking to withdraw or contain a clear indication that one attorney is signing on behalf of another/others. The Office requires the practitioner(s) requesting withdrawal to certify that he, she, or they have: (1) given reasonable notice to the client, prior to the expiration of the response period, that the practitioner(s) intends to withdraw from employment; (2) delivered to the client or a duly authorized representative of the client all papers and property (including funds) to which the client is entitled; and (3) notified the client of any responses that may be due and the time frame within which the client must respond , pursuant to 37 CFR 10.40.

The request was signed by Jessica R. Wolff on behalf of all attorneys of record who are associated with Customer Number 58249.

All attorneys/agents associated with Customer Number 58249 have been withdrawn.

Applicant is reminded that there is no attorney of record at this time.

The correspondence address of record has been changed and all future correspondence will be directed to the assignee of the entire interest at the address indicated below.

There is an outstanding Office action mailed March 17, 2011, that requires a reply from the applicant.

Telephone inquiries concerning this decision should be directed to the undersigned at 571-272-4584.

JoAnne Burke
Petitions Examiner
Office of Petitions

cc: Althea Technologies, Inc.
11040 Roselle Street
San Diego, CA 92121

UNITED STATES PATENT AND TRADEMARK OFFICE

UNITED STATES DEPARTMENT OF COMMERCE
United States Patent and Trademark Office
Address: COMMISSIONER FOR PATENTS
P.O. Box 1450
Alexandria, Virginia 22313-1450
www.uspto.gov

APPLICATION NUMBER	FILING OR 371(C) DATE	FIRST NAMED APPLICANT	ATTY. DOCKET NO./TITLE
12/609,650	10/30/2009	Alexey J. Margolin	ALTH-010/06US 307255-2146

CONFIRMATION NO. 8836

POWER OF ATTORNEY NOTICE

OC000000047780110

58249
COOLEY LLP
ATTN: Patent Group
Suite 1100
777 - 6th Street, NW
WASHINGTON, DC 20001

Date Mailed: 05/20/2011

NOTICE REGARDING CHANGE OF POWER OF ATTORNEY

This is in response to the Power of Attorney filed 05/09/2011.

- The withdrawal as attorney in this application has been accepted. Future correspondence will be mailed to the new address of record. 37 CFR 1.33.

/jlburke/

Office of Data Management, Application Assistance Unit (571) 272-4000, or (571) 272-4200, or 1-888-786-0101

UNITED STATES PATENT AND TRADEMARK OFFICE

Commissioner for Patents
United States Patent and Trademark Office
P.O. Box 1450

MAILED

SEP 19 2011

OFFICE OF PETITIONS

John Alumit
16830 Ventura Blvd. Suite 360
Encino CA 91364

In re Application of	:	
Romualdo Luis Ribera SALCEDO	:	ON PETITION
Application No. 12/609,682	:	
Filed: October 30, 2009	:	
Atty. Docket No.: 22777-032	:	

This is in response to the petition under 37 CFR 1.137(b), filed September 12, 2011.

The petition is **GRANTED**.

The application became abandoned for failure to reply in a timely manner to the Notice to File Corrected Application Papers mailed May 21, 2010 (Notice), which set a shortened period for reply of two (2) months. No extension of time under the provisions of 37 CFR 1.136(a) was obtained. The application became abandoned July 22, 2010. A Notice of Abandonment was mailed January 26, 2011.

The petition satisfies the conditions for revival pursuant to 37 CFR 1.137(b) by including (1) a reply in the form of a Response to the Notice mailed May 21, 2010, (2) a petition fee of $810, and (3) a statement of unintentional delay. The response to the Notice is accepted as having been unintentionally delayed.

Telephone inquiries relating to this decision should be directed to Robert DeWitty, Petitions Attorney, Office of Petitions (571-272-8427).

The application will be referred to Office of Patent Application Processing for processing of the filed Response.

Anthony Knight
Director
Office of Petitions

UNITED STATES PATENT AND TRADEMARK OFFICE

Commissioner for Patents
United States Patent and Trademark Office
P.O. Box 1450
Alexandria, VA 22313-1450
www.uspto.gov

CHOATE, HALL & STEWART / CITRIX SYSTEMS, INC.
TWO INTERNATIONAL PLACE
BOSTON MA 02110

MAILED

DEC 06 2010

OFFICE OF PETITIONS

In re Application of	:	
Paul Ryman	:	
Application No. 12/609,684	:	DECISION ON PETITION
Filed: October 30, 2009	:	TO WITHDRAW
Attorney Docket No. 2006579-1338 (CTX-413)	:	FROM RECORD
	:	

This is a decision on the Request to Withdraw as attorney or agent of record under 37 C.F.R. § 1.36(b), filed November 10, 2010.

The request is **NOT APPROVED.**

The Office will no longer accept address changes to a new practitioner or law firm filed with a Request, absent the filing of a power of attorney to the new representative. The Office will either change the correspondence address of record to the most current address information provided for the assignee of the entire interest who properly became of record under 37 CFR 3.71 or, if no assignee of the entire interest has properly been made of record under 37 CFR 3.71, the most current address information provided for the first named inventor.

Accordingly, the request to withdraw from record cannot be approved because the request to change the correspondence address is not that of: (1) the first named inventor; or (2) an assignee of the entire interest under 37 C.F.R 3.71. If an assignee has ownership in this application, then a current Statement under 37 CFR 3.73(b) or a copy of the actual assignment must be provided with a renewed request.

All future communications from the Office will continue to be directed to the above-identified address until otherwise properly notified.

Telephone inquiries concerning this decision should be directed to the undersigned at 571-272-4618.

/Kimberly Inabinet/

Kimberly Inabinet
Petitions Examiner
Office of Petitions

UNITED STATES PATENT AND TRADEMARK OFFICE

Commissioner for Patents
United States Patent and Trademark Office
P.O. Box 1450
Alexandria, VA 22313-1450
www.uspto.gov

CHOATE, HALL & STEWART / CITRIX SYSTEMS, INC.
TWO INTERNATIONAL PLACE
BOSTON MA 02110

MAILED

DEC 10 2010

OFFICE OF PETITIONS

In re Application of Ryman, Paul Application No. 12/609,731 Filed: October 30, 2009 Attorney Docket No. 2006579-1838 (CTX-586)	: : : : :	DECISION ON PETITION TO WITHDRAW FROM RECORD

This is a decision on the Request to Withdraw as Attorney or Agent under 37 C.F.R. § 1.36(b) or 37 C.F.R. § 10.40, filed November 10, 2010.

The request is **DISMISSED**.

A review of the file record indicates that practitioner signing the request, Brenda Herschbach Jarrell, and the attorneys/agents of Choate, Hall & Stewart: (1) do not have power of attorney in this patent application; but (2) have been employed or otherwise engaged in the proceedings in this patent application.

The Office will no longer approve requests from practitioners to withdraw from applications where the requesting practitioner was never given power of attorney but is acting, or has acted, in a representative capacity pursuant to 37 CFR 1.34. In these situations, the practitioner is responsible for the correspondence the practitioner files in the application while acting in a representative capacity. As such, there is no need for the practitioner to obtain the Office's permission to withdraw from representation.

Further, the change of correspondence address as listed in the Request to Withdraw cannot be accepted because it was not signed by an attorney of record. *See MPEP §§ 601.03 and 405.* If the applicants wish future correspondence to be mailed to a new law firm, a new power of attorney should be submitted in the application and should include the desired change of correspondence address. The Office will continue to mail all future correspondence solely to the address of record until otherwise properly notified by the applicant.

Telephone inquires concerning this decision should be directed to the undersigned at 571-272-3206.

Liana Walsh
Petitions Examiner
Office of Petitions

UNITED STATES PATENT AND TRADEMARK OFFICE

Commissioner for Patents
United States Patent and Trademark Office
P.O. Box 1450
Alexandria, VA 22313-1450
www.uspto.gov

SCHLUMBERGER RESERVOIR COMPLETIONS
14910 AIRLINE ROAD
ROSHARON TX 77583

MAILED

SEP 22 2010

OFFICE OF PETITIONS

In re Application of	:	
Michael H. Du	:	
Application No. 12/609,733	:	DECISION ON PETITION
Filed: October 30, 2009	:	
Attorney Docket No. 68.0887	:	

This is a decision on the petition under the unintentional provisions of 37 CFR 1.137(b), filed August 23, 2010, to revive the above-identified application.

The petition is **GRANTED**.

The application became abandoned for failure to reply in a timely manner to the Notice to File Corrected Application Papers, mailed November 18, 2009. The Notice set a period for reply of two (2) months from the mail date of the Notice. No extensions of time under the provisions of 37 CFR 1.136(a) were obtained. Accordingly, the application became abandoned on January 19, 2010. The Notice of Abandonment was mailed July 27, 2010.

The petition satisfies the requirements of 37 CFR 1.137(b) in that petitioner has supplied (1) the reply in the form of replacement drawings, (2) the petition fee of $1,620, and (3) a proper statement of unintentional delay.

It is not apparent whether the person signing the statement of unintentional delay was in a position to have firsthand or direct knowledge of the facts and circumstances of the delay at issue. Nevertheless, such statement is being treated as having been made as the result of a reasonable inquiry into the facts and circumstances of such delay. See 37 CFR 10.18(b) and Changes to Patent Practice and Procedure; Final Rule Notice, 62 Fed. Reg. 53131, 53178 (October 10, 1997), 1203 Off. Gaz. Pat. Office 63, 103 (October 21, 1997). In the event that such an inquiry has not been made, petitioner must make such an inquiry. If such inquiry results in the discovery that it is not correct that the entire delay in filing the required reply from the due date for the reply until the filing of a grantable petition pursuant to 37 CFR 1.137(b) was unintentional, petitioner must notify the Office.

Telephone inquiries concerning this decision should be directed to Terri Johnson at (571) 272-2991.

This application is being referred to the Office of Patent Application Processing for appropriate action on the reply received.

/Terri Johnson/
Terri Johnson
Petitions Examiner
Office of Petitions

UNITED STATES PATENT AND TRADEMARK OFFICE

Commissioner for Patents
United States Patent and Trademark Office
P.O. Box 1450
Alexandria, VA 22313-1450
www.uspto.gov

SUGHRUE MION/IMMUNOGEN
2100 PENNSYLVANIA AVENUE, N.W.
WASHINGTON, DC 20037

MAILED

FEB 03 2011

OFFICE OF PETITIONS

Applicant: Blattler, et al.
Appl. No.: 12/609,737
Filing Date: October 30, 2009
Title: METHODS OF TREATMENT USING ANTI-ERBB ANTIBODY-MAYTANSINOID CONJUGATES
Attorney Docket No.: A10238
Pub. No.: US 2010/0136033 A1
Pub. Date: June 3, 2010

This is a decision on the request for a corrected patent application publication under 37 CFR 1.221(b), received on June 11, 2010, for the above-identified application.

The request is DISMISSED as moot.

Since the application has been expressly abandoned, the request is deemed moot.

Inquiries relating to this matter may be directed to Mark Polutta at (571) 272-7709.

Mark Polutta
Senior Legal Advisor
Office of Patent Legal Administration
Office of the Deputy Commissioner
for Patent Examination Policy

UNITED STATES PATENT AND TRADEMARK OFFICE

Commissioner for Patents
United States Patent and Trademark Office
P.O. Box 1450
Alexandria, VA 22313-1450
www.uspto.gov

MOTOROLA INC
600 NORTH US HIGHWAY 45
W4 - 39Q
LIBERTYVILLE IL 60048-5343

MAILED

OCT 21 2010

OFFICE OF PETITIONS

In re Application of :
Sheila Foley et al. :
Application No. 12/609,738 :
Filed: October 30, 2009 :
Attorney Docket No. CS36376

DECISION ON PETITION

This is in response to the petition under 37 CFR 1.183 requesting waiver of the execution of an oath which is being treated as a petition under 37 CFR 1.47(a) and the petition for revival of an unintentionally abandoned application under 37 CFR 1.137(b). Both petitions were filed on June 14, 2010.

The petition under 37 CFR 1.47(a) is **dismissed.**

The petition under 37 CFR 1.137(b) is **dismissed**.

As to the petition under 37 CFR 1.47(a):

Rule 47 applicant is given TWO MONTHS from the mailing date of this decision to reply, correcting the below-noted deficiencies. Any reply should be entitled "Request for Reconsideration of Petition Under 37 CFR 1.47(a)," and should only address the deficiencies noted below, except that the reply may include an oath or declaration executed by the non-signing inventor. **FAILURE TO RESPOND WILL RESULT IN ABANDONMENT OF THE APPLICATION.** Any extensions of time will be governed by 37 CFR 1.136(a).

A grantable petition under 37 CFR 1.47(a) requires: (1) proof that the non-signing inventor cannot be reached or refuses to sign the oath or declaration after having been presented with the application papers (specification, claims and drawings); (2) an acceptable oath or declaration in compliance with 35 U.S.C. §§ 115 and 116; (3) the petition fee; and (4) a statement of the last known address of the non-signing inventor. Applicant lacks item (1) set forth above.

As to item (1), the applicable statute (35 U.S.C.§ 116) requires that a "diligent effort" have been expended in attempting to find or reach the non-signing inventor. *See* MPEP 409.03(a). The showing currently fails to demonstrate, with a documented showing, that a diligent effort was

made to find or locate non-signing inventor Powell, such that the declaration can be accepted under 37 CFR 1.47(a). Where inability to find or locate a named inventor(s) is alleged, a statement of facts should be submitted that fully describes the exact facts which are relied on to establish that a *diligent effort* was made to locate the inventor.

Petitioner has not demonstrated that all efforts were expended in trying to locate inventor non-signing Powell. In this regard, petitioner should, at the very least, conduct a search of the regional or national registry(s). The results of such search should be made in any future petition for reconsideration. *See* MPEP 409.03(d). Additionally, petitioner should state whether he has access to inventor Powell's personnel records and, if so, what does inspection of the records reveal as to a current address, forwarding address, or an address of the nearest living relative? What does inspection of the phone directories for those address locations reveal? Petitioner should mail correspondence to the inventor's last known address, return receipt and/or forwarding address requested. If a forwarding address is provided, petitioner should then mail a complete copy of the application papers (specification, claims, drawings, oath, etc.) to Mr. Powells's address, return receipt requested, along with a cover letter of instructions which includes a deadline or a statement that no response will constitute a refusal. This sort of ultimatum lends support to a finding of refusal by conduct. If the papers are returned and all other attempts to locate or reach the inventor, e.g., through personnel records, co-workers, E-mail, the Internet or the telephone, etc., continue to fail, then applicant will have established that the inventor cannot be reached after diligent effort or has refused to join in the application. **The statements of facts must be signed, where at all possible, by a person having firsthand knowledge of the facts recited therein and should be accompanied by documentary evidence in support of the statement of facts.** It is important that the forthcoming communication contain statements of fact as opposed to conclusions.

Where there is an express or oral refusal, that fact, along with the time and place of the refusal, must be stated in an affidavit or declaration by the party to whom the refusal was made. Where there is a written refusal, a copy of the document(s) evidencing that refusal must be made part of the affidavit or declaration.

When it is concluded by the rule 47 applicant that an omitted inventor's conduct constitutes a refusal, all facts upon which that conclusion is based should be stated in an affidavit or declaration. If there is documentary evidence to support facts alleged in the affidavit or declaration, such evidence must be submitted.

Whenever an omitted inventor gives a reason for refusing to sign the application oath or declaration, that reason should be stated in the affidavit or declaration.

<u>As to the petition under 37 CFR 1.137(b):</u>

The application became abandoned for failure to reply in a timely manner to the Notice to File Missing Parts of Nonprovisional Application (Notice), mailed November 6, 2009. The Notice set a period for reply of two (2) months from the mail date of the Notice. No extensions of time

under the provisions of 37 CFR 1.136(a) were obtained. Accordingly, the application became abandoned on January 7, 2010.

A grantable petition under 37 CFR 1.137(b) must be accompanied by: (1) the required reply, unless previously filed; (2) the petition fee as set forth in 37 CFR 1.17(m); (3) a statement that the entire delay in filing the required reply from the due date for the reply until the filing of a grantable petition pursuant to 37 CFR 1.137(b) was unintentional; and (4) any terminal disclaimer (and fee as set forth in 37 CFR 1.20(d)) required by 37 CFR 1.137(c). Where there is a question as to whether either the abandonment or the delay in filing a petition under 37 CFR 1.137 was unintentional, the Commissioner may require additional information. See MPEP 711.03(c)(II)(C) and (D). The instant petition lacks item (1) above.

Since the petition for waiver of the execution requirements of an oath is not granted at this time, the declaration filed with the instant petitions is not acceptable as it is missing the signature of co-inventor Powell.

Further correspondence with respect to this matter should be addressed as follows:

By mail: Mail Stop PETITIONS
Commissioner for Patents
Post Office Box 1450
Alexandria, VA 22313-1450

By hand: Customer Service Window
Mail Stop Petitions
Randolph Building
401 Dulany Street
Alexandria, VA 22314

By fax: (571) 273-8300
ATTN: Office of Petitions

Telephone inquiries should be directed to Carl Friedman at (571) 272-6842.

Carl Friedman
Petitions Examiner
Office of Petitions

UNITED STATES PATENT AND TRADEMARK OFFICE

Commissioner for Patents
United States Patent and Trademark Office
P.O. Box 1450
Alexandria, VA 22313-1450
www.uspto.gov

MAILED

NOV 18 2010

OFFICE OF PETITIONS

MOTOROLA MOBILITY, INC
600 NORTH US HIGHWAY 45
W2-55BB
LIBERTYVILLE IL 60048-5343

In re Application of	:	
Sheila Foley et al.	:	DECISION REFUSING STATUS
Application No. 12/609,738	:	UNDER 37 CFR 1.47(b)
Filed: October 30, 2009	:	
Attorney Docket No. CS36376	:	

This is in response to the renewed Petition Under 37 CFR 1.47(b), filed November 2, 2010. This is also a reconsideration of the petition filed under 37 CFR 1.137(b).

The petition under 37 CFR 1.47(b) is **Dismissed as being MOOT**.

The petition under 37 CFR 1.137(b) is **Granted**.

A first petition under 37 CFR 1.47(b) and 1.137(b) was filed June 14, 2010 and was dismissed in a decision mailed October 21, 2010.

The renewed petition includes a signed declaration from the previously non-signing co-inventor. A petition under 37 CFR 1.47(b) is filed by the assignee when the inventors refuse to execute an application for patent. Since the renewed petition includes signed declarations there is now no need for such a petition and the petition is moot. This application need not be returned to the Office of Petitions for any further consideration under 37 CFR 1.47(b).

As all inventors have now signed a declaration, the required reply under 37 CFR 1.137(b) is provided and the petition is granted.

The application is being forwarded to the Office of Application Processing.

Telephone inquiries should be directed to Carl Friedman at (571) 272-6842.

Carl Friedman
Petitions Examiner
Office of Petitions

S/N 12/609,750 **PATENT**

IN THE UNITED STATES PATENT AND TRADEMARK OFFICE

Applicant:	Roland Hoff		Examiner: Kimberly Evans
Serial No.:	12/609,750		Group Art Unit: 3629
Filed:	October 30, 2009	Docket No.:	0035-051001/2009P00159US
Title:	ACCOUNT AND PRODUCT BASED SALES PROFESSIONAL WORKBENCH		

NOT FOR ENTRY – FOR DISCUSSION PURPOSES ONLY

APPLICANT INITIATED INTERVIEW REQUEST AND AGENDA

Applicant's representative, Jared Scholz, respectfully requests a telephone interview with Kimberly Evans, scheduled for Thursday, April 5, 2012 at 10:00am EST. No exhibits are to be shown or demonstrated. A non-final office action was mailed on December 16, 2011.

Applicant wishes to discuss the enclosed Proposed Amendment in view of the rejections contained in the December 16, 2011 Office Action including the Section 101 and Section 103(a) rejections. In particular, Applicants wish to discuss the proposed claim amendments in view of the cited references.

Also, Applicant wishes to discuss any proposed amendments the Examiner might have, or any suggestions on modifying the enclosed proposed amendments. If the Examiner has any questions, or needs to re-schedule the interview, the Examiner is invited to call Jared Scholz at 202-470-6463.

Respectfully submitted,

Brake Hughes Bellermann LLP

By: /Jared Scholz, Reg. No. 64088/

Date: April 2, 2012

Jared Scholz
Reg. No. 64,088

Brake Hughes Bellermann LLP
Customer Number 56056
Telephone: 202-470-6463

Enclosures: Proposed Amendments (4 pages)

12/609,750

Proposed Amendments – for discussion purposes only

1. (Currently Amended) A computer program product for handling sales activity information, the computer program product being tangibly embodied on a non-transistors computer-readable medium and including executable code that, when executed, is configured to cause a data processing apparatus to provide a sales activity interface comprising:

an accounts table that includes a plurality of accounts, each of the plurality of accounts including a grouped plurality of fields included in a line of the accounts table, each grouped plurality of fields corresponding to a different customer account associated with a sales representative, each grouped plurality of field including,

~~a grouped plurality of fields that are grouped with respect to a customer account associated with a sales representative, the grouped plurality of fields including:~~

an account name field configured to identify the customer account; and

a product indication field configured to provide one ormore products associated with the customer account and prioritization data indicating a priority associated with the one or more product,

wherein the account name field is a primary key field for sorting the accounts table and the product indication field is a secondary key field for sorting products associated with each account.

2. (Original) The computer program product of claim 1, further including a product category indication field configured to provide a category associated with the customer account.

3. (Original) The computer program product of claim 1, further including a priority indication field configured to provide a priority associated with the customer account.

4. (Currently Amended) The computer program product of claim 1, wherein each line of the accounts table also includes ~~further including~~ an expansion button associated with a respective customer account, and upon selection of the expansion button, the accounts table provides one or more products associated with the respective customer account ~~sales view, with~~

PAGE 2/5 * RCVD AT 4/2/2012 10:11:40 AM [Eastern Daylight Time] * SVR:W-PTOFAX-003/9 * DNIS:2704929 * CSID: * DURATION (mm-ss):02-53

~~expandable accounts, that show in expanded view at least a product associated with the respective account~~.

5. (Currently Amended) The computer program product of claim 4, wherein the accounts table provides a category indicator for each of the one or more products~~further comprising a category associated with the respective account shown in the expanded view~~.

6. (Currently Amended) The computer program product of claim 4, wherein the accounts table provides ~~further comprising~~ a priority associated with each of the one or more products ~~a respective account shown in the expanded view~~.

7-9. (Cancelled)

10. (Currently Amended) A customer relationship management system including a customer relationship manager server configured to provide a sales workbench system for use by a sales representative, the sales workbench system comprising:

at least one processor;

non-transitory computer-readable storage medium including instructions executable by the at least one processor, the instructions configured to implement,

an account manager configured to access account information for customer accounts associated with the sales representative, including product information associated with the respective customer accounts;

a contact manager configured to access contact information for each of the customer accounts, the contact information including past and future contacts between the sales representative and the customer account;

a sales manager configured to access sales data for each of the customer accounts, the sales manager including an aggregator configured to aggregate the sales data for each of the customer accounts over a time period;

a view generator configured to generate a sales activity interface including an accounts table that includes the customer accounts, each of the customer accountsincluding a grouped plurality of fields included in a line of the accounts table, each grouped plurality of fields

PAGE 3/5 * RCVD AT 4/2/2012 10:11:40 AM [Eastern Daylight Time] * SVR:W-PTOFAX-003/9 * DNIS:2704929 * CSID: * DURATION (mm-ss):02-53

corresponding to a different customer account associated with the sales representative~~in which the contact information, product information and the sales data for each customer account are grouped and presented with respect to their respective customer account~~, the grouped plurality of fields including,

an account name field configured to identify a respective customer account;

a contact information field configured to provide the contact information for a respective customer account;

one or more sales data fields configured to provide the aggregated sales data for the customer account, and

a product indication field configured to provide one or more products associated with the customer account; and

an account value manager configured to prioritize the customer accounts within the sales activity interface according to a relative value of each customer account to the sales representative,

wherein the account name field is a primary key field for sorting the accounts table and the product indication field is a secondary key field for sorting products associated with each account.

11-13. (Cancelled)

14. (Currently Amended) The system of claim 10 wherein the view generator is configured to generate the sales activity interface to include an expansion button~~as including a sales view, with expandable accounts,~~associated with a respective customer account, and upon selection of the expansion button, the accounts table provides one or more products associated with the respective customer account~~that show in expanded view at least a product associated with the respective account as determined from the product information~~.

15. (Currently Amended) The system of claim 14, wherein the accounts table provides a category indicator for each of the one or more products~~a category is associated with a respective account shown in the expanded view~~.

PAGE 4/5 * RCVD AT 4/2/2012 10:11:40 AM [Eastern Daylight Time] * SVR:W-PTOFAX-003/9 * DNIS:2704929 * CSID: * DURATION (mm-ss):02-53

16. (Currently Amended) The system of claim 14, wherein the accounts table providesa priority is associated with each of the one or more products ~~a respective account shown in the expanded view~~.

PAGE 5/5 * RCVD AT 4/2/2012 10:11:40 AM [Eastern Daylight Time] * SVR:W-PTOFAX-003/9 * DNIS:2704929 * CSID: * DURATION (mm-ss):02-53

UNITED STATES PATENT AND TRADEMARK OFFICE

Commissioner for Patents
United States Patent and Trademark Office
P.O. Box 1450
Alexandria, VA 22313-1450
www.uspto.gov

NEW RIVER VALLEY INTELLECTUAL PROPERTY LAW
P.O. BOX 10944
BLACKSBURG VA 24062

MAILED

FEB 25 2011

OFFICE OF PETITIONS

In re Application:	:	
Davalos et al.	:	
Application No. 12/609,779	:	ON PETITION
Filed: October 30, 2009	:	
Attorney Docket No. VTIP-161-01	:	

This is a notice regarding your request for acceptance of a fee deficiency submission under 37 CFR 1.28 filed January 18, 2011.

On September 1, 1998, the Court of Appeals for the Federal Circuit held that 37 CFR 1.28(c) is the sole provision governing the time for correction of the erroneous payment of the issue fee as a small entity. **See DH Technology v. Synergystex International, Inc. 154 F.3d 1333, 47 USPQ2d 1865 (Fed. Cir. Sept. 1, 1998).**

The Office no longer investigates or rejects original or reissue applications under 37 CFR 1.56. **1098 Off. Gaz. Pat. Office 502 (January 3, 1989)**. Therefore, nothing in this Notice is intended to imply that an investigation was done.

Your fee deficiency submission under 37 CFR 1.28 is hereby **ACCEPTED**.

This application is no longer entitled to small entity status. Accordingly, all future fees paid in this application must be paid at the large entity rate.

Telephone inquires concerning this decision should be directed to the undersigned at (571) 272-7751.

Joan Olszewski

Joan Olszewski
Petitions Examiner
Office of Petitions

UNITED STATES PATENT AND TRADEMARK OFFICE

Commissioner for Patents
United States Patent and Trademark Office
P.O. Box 1450
Alexandria, VA 22313-1450
www.uspto.gov

FISH & RICHARDSON P.C.
P.O. BOX 1022
MINNEAPOLIS MN 55440-1022

MAILED

OCT 01 2010

OFFICE OF PETITIONS

In re Application of	:	
Shunpei Yamazaki et al	:	
Application No. 12/609,820	:	DECISION GRANTING PETITION
Filed: October 30, 2009	:	UNDER 37 CFR 1.313(c)(2)
Attorney Docket No. 12732-0029005	:	

This is a decision on the petition under 37 CFR 1.313(c)(2), filed September 29, 2010, to withdraw the above-identified application from issue after payment of the issue fee.

The petition is **GRANTED**.

The above-identified application is withdrawn from issue for consideration of a submission under 37 CFR 1.114 (request for continued examination). *See* 37 CFR 1.313(c)(2).

Petitioner is advised that the issue fee paid on September 17, 2010 cannot be refunded. If, however, this application is again allowed, petitioner may request that it be applied towards the issue fee required by the new Notice of Allowance.[1]

Telephone inquiries should be directed to the undersigned at (571) 272-3208.

This application is being referred to Technology Center AU 2629 for processing of the request for continued examination under 37 CFR 1.114 and for consideration of the concurrently filed IDS.

/Karen Creasy/
Karen Creasy
Petitions Examiner
Office of Petitions

---

[1] *The request to apply the issue fee to the new Notice may be satisfied by completing and returning the new Part B – Fee(s) Transmittal Form (along with any balance due at the time of submission). Petitioner is advised that the Issue Fee Transmittal Form must be completed and timely submitted to avoid abandonment of the application.*

UNITED STATES PATENT AND TRADEMARK OFFICE

Commissioner for Patents
United States Patent and Trademark Office
P.O. Box 1450
Alexandria, VA 22313-1450
www.uspto.gov

FISH & RICHARDSON P.C. (DC)
P.O. BOX 1022
MINNEAPOLIS MN 55440-1022

MAILED

MAR 09 2011

OFFICE OF PETITIONS

In re Application of	:	
Shunpei Yamazaki et al	:	
Application No. 12/609,820	:	DECISION GRANTING PETITION
Filed: October 30, 2009	:	UNDER 37 CFR 1.313(c)(2)
Attorney Docket No. 12732-0029005	:	

This is a decision on the petition under 37 CFR 1.313(c)(2), filed March 8, 2011, and again on March 9, 2011, to withdraw the above-identified application from issue after payment of the issue fee.

The petition is **GRANTED**.

The above-identified application is withdrawn from issue for consideration of a submission under 37 CFR 1.114 (request for continued examination). *See* 37 CFR 1.313(c)(2).

Petitioner is advised that the issue fee paid on January 19, 2011 cannot be refunded. If, however, this application is again allowed, petitioner may request that it be applied towards the issue fee required by the new Notice of Allowance.[1]

Telephone inquiries should be directed to the undersigned at (571) 272-3208.

This application is being referred to Technology Center AU 2629 for processing of the request for continued examination under 37 CFR 1.114 and for consideration of the concurrently filed IDS.

/Karen Creasy/
Karen Creasy
Petitions Examiner
Office of Petitions

---

[1] *The request to apply the issue fee to the new Notice may be satisfied by completing and returning the new Part B – Fee(s) Transmittal Form (along with any balance due at the time of submission). Petitioner is advised that the Issue Fee Transmittal Form* ***must*** *be completed and timely submitted to avoid abandonment of the application.*

UNITED STATES PATENT AND TRADEMARK OFFICE

Commissioner for Patents
United States Patent and Trademark Office
P.O. Box 1450
Alexandria, VA 22313-1450
www.uspto.gov

Yahoo! Inc.
c/o Frommer Lawrence & Haug LLP
745 Fifth Avenue
New York, NY 10151

MAILED

NOV 21 2011

OFFICE OF PETITIONS

In re Application of	:	
Edward Stanley Ott IV, et al.	:	
Application No. 12/609,865	:	DECISION ON PETITION
Filed: October 30, 2009	:	TO WITHDRAW
Attorney Docket No. **070.P190C**	:	FROM RECORD

This is a decision on the Request to Withdraw as attorney or agent of record under 37 CFR. § 1.36(b), filed October 17, 2011.

The request is **NOT APPROVED** as moot.

A review of the file record indicates that the power of attorney to attorneys/agents associated with Customer Number 38880 has been revoked by the applicants of the patent application on November 1, 2011. Accordingly, the request to withdraw under 37 CFR § 1.36(b) is moot.

All future communications from the Office will continue to be directed to the below-listed address until otherwise notified by applicant.

Telephone inquires concerning this decision should be directed to the undersigned at 571-272-4584.

JoAnne Burke
Petitions Examiner
Office of Petitions

cc: BERKELEY LAW & TECHNOLOGY GROUP LLP
17933 NW EVERGREEN PARKWAY
SUITE 250
BEAVERTON OR 97006

UNITED STATES PATENT AND TRADEMARK OFFICE

Commissioner for Patents
United States Patent and Trademark Office
P.O. Box 1450
Alexandria, VA 22313-1450
www.uspto.gov

BRACEWELL & GIULIANI, LLP
PO BOX 61389
HOUSTON, TX 77208-1389

MAILED
DEC 01 2011
OFFICE OF PETITIONS

In re Application of	:	
Eric D. Miller	:	
Application No. 12/609,896	:	DECISION GRANTING PETITION
Filed: October 30, 2009	:	UNDER 37 CFR 1.313(c)(2)
Attorney Docket No. 058052.00004.19A	:	

This is a decision on the petition under 37 CFR 1.313(c)(2), filed November 30, 2011 and supplemented November 21, 2011, to withdraw the above-identified application from issue after payment of the issue fee.

The petition is **GRANTED**.

The above-identified application is withdrawn from issue for consideration of a submission under 37 CFR 1.114 (request for continued examination). *See* 37 CFR 1.313(c)(2).

Petitioner is advised that the issue fee paid on November 7, 2011 cannot be refunded. If, however, this application is again allowed, petitioner may request that it be applied towards the issue fee required by the new Notice of Allowance.[1]

Telephone inquiries regarding this decision should be directed to undersigned at (571) 272-1642. All other inquiries concerning the examination or status of this application should be directed to the Technology Center.

This application is being referred to Technology Center AU 3625 for processing of the request for continued examination under 37 CFR 1.114 and for consideration of the concurrently filed information disclosure statement and the amendment previously filed November 4, 2011

/AMW/
April M. Wise
Petitions Examiner
Office of Petitions

---

[1] *The request to apply the issue fee to the new Notice may be satisfied by completing and returning the new Part B – Fee(s) Transmittal Form (along with any balance due at the time of submission). Petitioner is advised that the Issue Fee Transmittal Form must be completed and timely submitted to avoid abandonment of the application.*

UNITED STATES PATENT AND TRADEMARK OFFICE

Commissioner for Patents
United States Patent and Trademark Office
P.O. Box 1450
Alexandria, VA 22313-1450
www.uspto.gov

MEREDITH & KEYHANI, PLLC
330 MADISON AVE.
6TH FLOOR
NEW YORK NY 10017

MAILED

MAR 22 2011

OFFICE OF PETITIONS

In re Application of :

SMEJKALOVA, Vladislava :
Application No. 12/609,903 :
Filed: October 30, 2009 :
Attorney Docket No. SMEJ-001 :

DECISION ON PETITION
TO WITHDRAW
FROM RECORD

This is a decision on the Request to Withdraw as attorney or agent of record under 37 C.F.R. § 1.36(b), filed February 14, 2011.

The request is **NOT APPROVED**.

The Office has revised its change in procedure for request to withdraw from representation applies to requests filed on or after May 12, 2008.

A grantable request to withdraw as attorney/agent of record must be signed by every attorney/agent seeking to withdraw or contain a clear indication that one attorney is signing on behalf of another/others. The Office requires the practitioner(s) requesting withdrawal to certify that he, she, or they have: (1) given reasonable notice to the client, prior to the expiration of the response period, that the practitioner(s) intends to withdraw from employment; (2) delivered to the client or a duly authorized representative of the client all papers and property (including funds) to which the client is entitled; and (3) notified the client of any responses that may be due and the time frame within which the client must respond, pursuant 37 CFR 10.40(c).

The request cannot be approved because there is no indication that acts (1) thru (3) noted in the above-identified certifications have been performed.

All future communications from the Office will continue to be directed to the above-listed address until otherwise notified by applicant.

Telephone inquiries concerning this decision should be directed to Tredelle Jackson at 571-272- 2783.

/Tredelle D. Jackson/
Paralegal Specialist
Office of Petitions

UNITED STATES PATENT AND TRADEMARK OFFICE

Commissioner for Patents
United States Patent and Trademark Office
P.O. Box 1450
Alexandria, VA 22313-1450
www.uspto.gov

MAILED
JAN 13 2012
OFFICE OF PETITIONS

HEIMLICH LAW
5952 DIAL WAY
SAN JOSE CA 95129

In re Application of	:	
Nakano, et al.	:	
Application No. 12/609,910	:	DECISION ON PETITION
Filing Date: October 30, 2009	:	TO REVIVE
Attorney Docket No. NAHAVA-P005C1	:	

This is in response to the petition to revive under 37 CFR 1.137(b), filed December 23, 2011.

The petition under 37 CFR 1.137(b) is **GRANTED**.

The application became abandoned for failure to timely pay the issue fee in response to the Notice of Allowance, mailed September 22, 2011. This Notice set a statutory period for reply of three months. No issue fee having been received on or before December 22, 2011, the application became abandoned on December 23, 2011.

With the instant petition, applicants paid the petition fee, submitted the required reply in the form of the issue fee, and made the proper statement of unintentional delay.

The application is being forwarded to the Office of Data Management for processing into a patent.

Telephone inquiries concerning this decision may be directed to the undersigned at (571)272-3207.

Cliff Congo
Petitions Attorney
Office of Petitions

UNITED STATES PATENT AND TRADEMARK OFFICE

UNITED STATES DEPARTMENT OF COMMERCE
United States Patent and Trademark Office
Address: COMMISSIONER FOR PATENTS
P.O. Box 1450
Alexandria, Virginia 22313-1450
www.uspto.gov

APPLICATION NO.	FILING DATE	FIRST NAMED INVENTOR	ATTORNEY DOCKET NO.	CONFIRMATION NO.
12/609,939	10/30/2009	Richard T. Davis	P098551US01TL	9424

23378 7590 08/26/2010
BRADLEY ARANT BOULT CUMMINGS LLP
INTELLECTUAL PROPERTY DEPARTMENT
1819 FIFTH AVENUE NORTH
BIRMINGHAM, AL 35203-2104

EXAMINER
HRUSKOCI, PETER A

ART UNIT	PAPER NUMBER
1797	

MAIL DATE	DELIVERY MODE
08/26/2010	PAPER

Please find below and/or attached an Office communication concerning this application or proceeding.

The time period for reply, if any, is set in the attached communication.

UNITED STATES PATENT AND TRADEMARK OFFICE

Commissioner for Patents
United States Patent and Trademark Office
P.O. Box 1450
Alexandria, VA 22313-1450
www.uspto.gov

AUG 26 2010

BC

In re application of	:	DECISION ON REQUEST TO
Richard T. Davis et al.	:	PARTICIPATE IN PATENT
Serial No. 12/609,939	:	PROSECUTION HIGHWAY
Filed: October 30, 2009	:	PROGRAM AND
For: METHOD AND FACILITY FOR	:	PETITION TO MAKE SPECIAL
TREATING WASTE DRILLING MUD	:	UNDER 37 CFR 1.102(d)

This is a decision on the request to participate in the PCT Patent Prosecution Highway (PCT-PPH) pilot program and the petition under 37 CFR 1.102(d), filed July 26, 2010, to make the above-identified application special.

The request and petition are **GRANTED**.

A grantable request to participate in the PCT-PPH pilot program and petition to make special require:

(1) The U.S. application must disclose an eligible relationship to one or more PCT applications where the ISA or IPEA are the JPO, EPO, or USPTO;

(2) At least one claim in the PCT application has novelty, inventive step, and industrial applicability and must be free of any observations in Box VIII in the latest work product in the international stage or applicant must identify and explain why the claim(s) is/are not subject to the observation in Box VIII;

(3) Applicant must submit a copy of the claim(s) from the PCT application(s) that have novelty, inventive step, and industrial applicability along with an English translation thereof and a statement that the English translation is accurate, if the claims are not in the English language;

(4) All the claims in the U.S. application must sufficiently correspond or be amended to sufficiently correspond to the claim(s) that have novelty, inventive step, and industrial applicability in the PCT application(s);

(5) Examination of the U.S. application has not begun;

(6) Applicant must submit a copy of the latest international work product from the PCT application indicating that the claim(s) have novelty, inventive step, and industrial applicability along with an English translation thereof if the latest international work

product is not in the English language;

(7) Applicant must submit an IDS listing the documents cited by the PCT examiner in the international work product along with copies of documents except U.S. patents or U.S. patent application publications; and

The request to participate in the PPH program and petition comply with the above requirements. Accordingly, the above-identified application has been accorded "special" status.

The application is being forwarded to the examiner for action on the merits commensurate with this decision.

Any inquiry regarding this decision should be directed to Blaine Copenheaver, Quality Assurance Specialist, at (571) 272-1156.

All other inquiries concerning the examination or status of the application is accessible in the PAIR system at http://www.uspto.gov/ebc/index.html.

/Blaine Copenheaver/

Blaine Copenheaver
Quality Assurance Specialist
Technology Center 1700

UNITED STATES PATENT AND TRADEMARK OFFICE

Commissioner for Patents
United States Patent and Trademark Office
P.O. Box 1450
Alexandria, VA 22313-1450
www.uspto.gov

BC

In re application of	:	DECISION ON REQUEST TO
Richard T. Davis et al.	:	PARTICIPATE IN PATENT
Serial No. 12/609,939	:	PROSECUTION HIGHWAY
Filed: October 30, 2009	:	PROGRAM AND
For: METHOD AND FACILITY FOR	:	PETITION TO MAKE SPECIAL
TREATING WASTE DRILLING MUD	:	UNDER 37 CFR 1.102(d)

This is a decision on the request to participate in the PCT Patent Prosecution Highway (PCT-PPH) pilot program and the petition under 37 CFR 1.102(d), filed July 26, 2010, to make the above-identified application special.

The request and petition are **GRANTED**.

A grantable request to participate in the PCT-PPH pilot program and petition to make special require:

(1) The U.S. application must disclose an eligible relationship to one or more PCT applications where the ISA or IPEA are the JPO, EPO, or USPTO;

(2) At least one claim in the PCT application has novelty, inventive step, and industrial applicability and must be free of any observations in Box VIII in the latest work product in the international stage or applicant must identify and explain why the claim(s) is/are not subject to the observation in Box VIII;

(3) Applicant must submit a copy of the claim(s) from the PCT application(s) that have novelty, inventive step, and industrial applicability along with an English translation thereof and a statement that the English translation is accurate, if the claims are not in the English language;

(4) All the claims in the U.S. application must sufficiently correspond or be amended to sufficiently correspond to the claim(s) that have novelty, inventive step, and industrial applicability in the PCT application(s);

(5) Examination of the U.S. application has not begun;

(6) Applicant must submit a copy of the latest international work product from the PCT application indicating that the claim(s) have novelty, inventive step, and industrial applicability along with an English translation thereof if the latest international work

product is not in the English language;

(7) Applicant must submit an IDS listing the documents cited by the PCT examiner in the international work product along with copies of documents except U.S. patents or U.S. patent application publications; and

The request to participate in the PPH program and petition comply with the above requirements. Accordingly, the above-identified application has been accorded "special" status.

The application is being forwarded to the examiner for action on the merits commensurate with this decision.

Any inquiry regarding this decision should be directed to Blaine Copenheaver, Quality Assurance Specialist, at (571) 272-1156.

All other inquiries concerning the examination or status of the application is accessible in the PAIR system at http://www.uspto.gov/ebc/index.html.

/Blaine Copenheaver/

Blaine Copenheaver
Quality Assurance Specialist
Technology Center 1700

UNITED STATES PATENT AND TRADEMARK OFFICE

UNITED STATES DEPARTMENT OF COMMERCE
United States Patent and Trademark Office
Address: COMMISSIONER FOR PATENTS
P.O. Box 1450
Alexandria, Virginia 22313-1450
www.uspto.gov

APPLICATION NO.	FILING DATE	FIRST NAMED INVENTOR	ATTORNEY DOCKET NO.	CONFIRMATION NO.
12/609,966	10/30/2009	Takahiro Kakubashi	8073P818	9489

8791 7590 12/09/2010
BLAKELY SOKOLOFF TAYLOR & ZAFMAN LLP
1279 OAKMEAD PARKWAY
SUNNYVALE, CA 94085-4040

EXAMINER

ART UNIT	PAPER NUMBER
2484	

MAIL DATE	DELIVERY MODE
12/09/2010	PAPER

Please find below and/or attached an Office communication concerning this application or proceeding.

The time period for reply, if any, is set in the attached communication.

UNITED STATES PATENT AND TRADEMARK OFFICE

Commissioner for Patents
United States Patent and Trademark Office
P.O. Box 1450
Alexandria, VA 22313-1450
www.uspto.gov

MAILED

DEC 08 2010

DIRECTOR OFFICE
TECHNOLOGY CENTER 2400

BLAKELY SOKOLOFF TAYLOR & ZAFMAN LLP
1279 OAKMEAD PARKWAY
SUNNYVALE CA 94085-4040

In re Application of	:	
KAKUBASHI, TAKAHIRO	:	DECISION ON REQUEST TO
Application No. 12/609,966	:	PARTICIPATE IN PATENT
Filed: October 30, 2009	:	PROSECUTION HIGHWAY
Attorney Docket No. **8073P818**	:	PROGRAM AND PETITION
	:	TO MAKE SPECIAL UNDER
	:	37 CFR 1.102(d)

This is a decision on the request to participate in the Patent Prosecution Highway (PPH) program and the petition under 37 CFR 1.102(d), filed August 26, 2010 to make the above-identified application special.

The request and petition are **GRANTED**.

A grantable request to participate in the PPH program and petition to make special require:

(1) The U.S. application must validly claim priority under 35 U.S.C. 119(a) to one or more applications filed in the JPO;
(2) Applicant must submit a copy of the allowable/patentable claim(s) from the JPO application(s) along with an English translation thereof and a statement that the English translation is accurate;
(3) All the claims in the U.S. application must sufficiently correspond or be amended to sufficiently correspond to the allowable/patentable claim(s) in the JPO application(s);
(4) Examination of the U.S. application has not begun;
(5) Applicant must submit a copy of all the office actions from each of the JPO application(s) containing the allowable/patentable claim(s) along with an English translation thereof and a statement that the English translation is accurate;
(6) Applicant must submit an IDS listing the documents cited by the JPO examiner in the JPO office action along with copies of documents except U.S. patents or U.S. patent application publications; and

The request to participate in the PPH program and petition comply with the above requirements. Accordingly, the above-identified application has been accorded "special" status.

Telephone inquiries concerning this decision should be directed to Mehrdad Dastouri at 571-272-7418.

All other inquiries concerning the examination or status of the application should be directed to Patent Application Information Retrieval (PAIR) system.

The application is being forwarded to the examiner for action on the merits commensurate with this decision.

/Mehrdad Dastouri/

Mehrdad Dastouri
Quality Assurance Specialist
Technology Center 2400

PTO/SB/20PCT-KR (06-10)
Approved for use through 01/31/2012. OMB 0651-0058
U.S. Patent and Trademark Office; U. S. DEPARTMENT OF COMMERCE
Under the Paperwork Reduction Act of 1995, no persons are required to respond to a collection of information unless it displays a valid OMB control number.

REQUEST FOR PARTICIPATION IN THE PATENT COOPERATION TREATY - PATENT PROSECUTION HIGHWAY (PCT-PPH) PILOT PROGRAM BETWEEN THE KOREAN INTELLECTUAL PROPERTY OFFICE (KIPO) AND THE USPTO

Application No:	12/609,997	Filing date:	30-OCT-2009
First Named Inventor:	Joseph Andrew Tecza		
Title of the Invention:	VALVE SEQUENCING SYSTEM AND METHOD FOR CONTROLLING TURBOMACHINE ACOUSTIC SIGNATURE		

THIS REQUEST FOR PARTICIPATION IN THE PCT-PPH PILOT PROGRAM ALONG WITH THE REQUIRED DOCUMENTS MUST BE SUBMITTED VIA EFS-WEB. INFORMATION REGARDING EFS-WEB IS AVAILABLE AT HTTP://WWW.USPTO.GOV/EBC/EFS_HELP.HTML

APPLICANT HEREBY REQUESTS PARTICIPATION IN THE PCT-PPH PROGRAM AND PETITIONS TO MAKE THE ABOVE-IDENTIFIED APPLICATION SPECIAL UNDER THE PCT-PPH PROGRAM.

The above-identified application is (1) a national stage entry of the corresponding PCT application, or (2) a national stage entry of another PCT application which claims priority to the corresponding PCT application, or (3) a national application that claims domestic/ foreign priority to the corresponding PCT application, or (4) a national application which forms the basis for the priority claim in the corresponding PCT application, or (5) a continuing application of a U.S. application that satisfies one of (1) to (4) above, or (6) a U.S. application that claims domestic benefit to a U.S. provisional application which forms the basis for the priority claim in the corresponding PCT application.

The corresponding PCT application number(s) is/are: PCT/US2010/050899

The international filing date of the corresponding PCT application(s) is/are: 30-SEPTEMBER-2010

I. List of Required Documents:

a. **A copy of the latest international work product (WO/ISA, WO/IPEA, or IPER) in the above–identified corresponding PCT application(s)**

- [x] Is attached.
- [ ] Is not attached because the document is already in the U.S. application.

b. **A copy of all claims which were indicated as having novelty, inventive step and industrial applicability in the above-identified corresponding PCT application(s).**

- [x] Is attached.
- [ ] Is not attached because the document is already in the U.S. application.

c. **English translations of the documents in a. and b. above are attached (if the documents are not in the English language). A statement that the English translation is accurate is attached for the document in b. above.**

This collection of information is required by 35 U.S.C. 119, 37 CFR 1.55, and 37 CFR 1.102(d). The information is required to obtain or retain a benefit by the public, which is to file (and by the USPTO to process) an application. Confidentiality is governed by 35 U.S.C. 122 and 37 CFR 1.11 and 1.14. This collection is estimated to take 2 hours to complete, including gathering, preparing, and submitting the completed application form to the USPTO. Time will vary depending upon the individual case. Any comments on the amount of time you require to complete this form and/or suggestions for reducing this burden should be sent to the Chief Information Officer, U.S. Patent and Trademark Office, U.S. Department of Commerce, P.O. Box 1450, Alexandria, VA 22313-1450. DO NOT SEND FEES OR COMPLETED FORMS TO THIS ADDRESS.

Approved for use through 01/31/2012. OMB 0651-0058
U.S.Patent and Trademark Office; U.S. DEPARTMENT OF COMMERCE
Under the Paperwork Reduction Act of 1995, no persons are required to respond to a collection of information unless it displays a valid OMB control number.

REQUEST FOR PARTICIPATION IN THE PCT-PPH PILOT PROGRAM BETWEEN THE KIPO AND THE USPTO

(continued)

Application No.:	12/609,997
First Named Inventor:	Joseph Andrew Tecza

d. **(1) An information disclosure statement listing the documents cited in the international work products (ISR, WO/ISA, WO/IPEA, IPER) of the corresponding PCT application.**

[✔] Is attached

[ ] Has already been filed in the above-identified U.S. application on _____

(2) Copies of all documents (except) for U.S. patents or U.S. patent application publications)

[✔] Are attached.

[ ] Have already been filed in the above-identified U.S. application on _____

II. Claims Correspondence Table:

Claims in US Application	Patentable Claims in the corresponding PCT Application	Explanation regarding the correspondence
1-6	1-6	Claims 1-6 in the US application correspond to claims 1-6 in the PCT application.
21-34	7-20	Claims 21-34 in the US application correspond to claims 7-20 in the PCT application.

III. All the claims in the US application sufficiently correspond to the patentable claims in the corresponding PCT application.

Signature /N. Alexander Nolte/	Date August 30, 2011
Name (Print/Typed) N. Alexander Nolte	Registration Number 45,689

Privacy Act Statement

The **Privacy Act of 1974 (P.L. 93-579)** requires that you be given certain information in connection with your submission of the attached form related to a patent application or patent. Accordingly, pursuant to the requirements of the Act, please be advised that: (1) the general authority for the collection of this information is 35 U.S.C. 2(b)(2); (2) furnishing of the information solicited is voluntary; and (3) the principal purpose for which the information is used by the U.S. Patent and Trademark Office is to process and/or examine your submission related to a patent application or patent. If you do not furnish the requested information, the U.S. Patent and Trademark Office may not be able to process and/or examine your submission, which may result in termination of proceedings or abandonment of the application or expiration of the patent.

The information provided by you in this form will be subject to the following routine uses:

1. The information on this form will be treated confidentially to the extent allowed under the Freedom of Information Act (5 U.S.C. 552) and the Privacy Act (5 U.S.C 552a). Records from this system of records may be disclosed to the Department of Justice to determine whether disclosure of these records is required by the Freedom of Information Act.
2. A record from this system of records may be disclosed, as a routine use, in the course of presenting evidence to a court, magistrate, or administrative tribunal, including disclosures to opposing counsel in the course of settlement negotiations.
3. A record in this system of records may be disclosed, as a routine use, to a Member of Congress submitting a request involving an individual, to whom the record pertains, when the individual has requested assistance from the Member with respect to the subject matter of the record.
4. A record in this system of records may be disclosed, as a routine use, to a contractor of the Agency having need for the information in order to perform a contract. Recipients of information shall be required to comply with the requirements of the Privacy Act of 1974, as amended, pursuant to 5 U.S.C. 552a(m).
5. A record related to an International Application filed under the Patent Cooperation Treaty in this system of records may be disclosed, as a routine use, to the International Bureau of the World Intellectual Property Organization, pursuant to the Patent Cooperation Treaty.
6. A record in this system of records may be disclosed, as a routine use, to another federal agency for purposes of National Security review (35 U.S.C. 181) and for review pursuant to the Atomic Energy Act (42 U.S.C. 218(c)).
7. A record from this system of records may be disclosed, as a routine use, to the Administrator, General Services, or his/her designee, during an inspection of records conducted by GSA as part of that agency's responsibility to recommend improvements in records management practices and programs, under authority of 44 U.S.C. 2904 and 2906. Such disclosure shall be made in accordance with the GSA regulations governing inspection of records for this purpose, and any other relevant (*i.e.*, GSA or Commerce) directive. Such disclosure shall not be used to make determinations about individuals.
8. A record from this system of records may be disclosed, as a routine use, to the public after either publication of the application pursuant to 35 U.S.C. 122(b) or issuance of a patent pursuant to 35 U.S.C. 151. Further, a record may be disclosed, subject to the limitations of 37 CFR 1.14, as a routine use, to the public if the record was filed in an application which became abandoned or in which the proceedings were terminated and which application is referenced by either a published application, an application open to public inspection or an issued patent.
9. A record from this system of records may be disclosed, as a routine use, to a Federal, State, or local law enforcement agency, if the USPTO becomes aware of a violation or potential violation of law or regulation.

Claims

We claim:

1. A method of controlling a turbomachine, the method comprising:

identifying an arc of admission corresponding to a desired operating load of the turbomachine, wherein turbomachine valves are either completely closed or completely open when the arc of admission is achieved; and

changing a position of at least one of the turbomachine valves using a valve sequencing scheme to expose the identified arc of admission and minimize an acoustic signature of the turbomachine valves during implementation of the desired operating load.

2. The method of claim 1, wherein the valve sequencing scheme is configured to position one or more turbomachine valves simultaneously.

3. The method of claim 1, wherein a plurality of arcs of admission for the desired operating load over a period of time is identified.

4. The method of claim 3, wherein the valve sequencing scheme includes simultaneously adjusting the valves in at least two different combinations over the period of time to achieve each of the plurality of arcs of admission.

5. The method of claim 1, wherein identifying the arc of admission includes identifying an arc of admission that reduces the acoustic signature of the turbomachine valves during implementation of the desired operating load.

6. The method of claim 1, wherein implementation of the desired operating load includes controlling a flow rate of a process gas through the turbomachine valves.

7. A method of controlling a turbomachine having valves, comprising:

identifying a first valve sequence that corresponds to a first operating load of the turbomachine, wherein the first valve sequence is configured to expose a first arc of admission;

identifying a second valve sequence that corresponds to a second operating load of the turbomachine, wherein the second valve sequence is configured to expose a second arc of admission; and

transitioning the valves from the first valve sequence to the second valve sequence such that the second operating load is achieved immediately before the second valve sequence is initiated and each of the valves is either completely closed or completely open when the second valve sequence is achieved.

8. The method of claim 7, wherein the first and second operating loads of the turbomachine comprise first and second flow rates of process gas, respectively, through the valves.

9. The method of claim 7, wherein transitioning the valves from the first valve sequence to the second valve sequence comprises opening a first valve and an adjacent second valve simultaneously, wherein the second valve begins to be opened before the first valve is completely open.

10. The method of claim 7, further comprising manipulating the position of the valves simultaneously during transition from the first valve sequence to the second valve sequence.

11. The method of claim 7, further comprising manipulating a position of each valve with a corresponding individual valve actuator.

12. The method of claim 11, wherein the individual valve actuators are controlled by a control system configured to reduce the acoustic signature of the valves.

13. The method of claim 12, further comprising using the control system to regulate the operation of the valves based on predetermined acoustic requirements of the turbomachine.

14. A turbomachine, comprising:

a plurality of valve actuators coupled to a corresponding plurality of valves;

a valve control system adapted to control the plurality of valve actuators and implement a valve sequencing scheme by changing the position of the plurality of valves between a first valve sequence and a second valve sequence; and

a diaphragm in fluid communication with the plurality of valves, wherein the first valve sequence corresponds to a first arc of admission exposed across the diaphragm and the second valve sequence corresponds to a second arc of admission exposed across the

diaphragm, and wherein transitioning from the first valve sequence to the second valve sequence minimizes an acoustic signature of the plurality of valves.

15. The turbomachine of claim 14, wherein the valve control system is configured to position two or more of the plurality of valves simultaneously.

16. The turbomachine of claim 14, wherein the control system is configured to identify the first and second arcs of admission.

17. The turbomachine of claim 16, wherein the control system regulates the operation of the plurality of valves based on predetermined acoustic requirements of the turbomachine.

18. The turbomachine of claim 14, wherein the plurality of valves comprise adjacent first and second valves, and transitioning from the first valve sequence to the second valve sequence comprises opening the first and second valves simultaneously, wherein the second valve begins to be opened before the first valve is completely open.

19. The turbomachine of claim 14, wherein the diaphragm comprises a plurality of partitions defining a corresponding plurality of nozzle bowls.

20. The turbomachine of claim 19, wherein each nozzle bowl comprises a plurality of nozzles.

UNITED STATES PATENT AND TRADEMARK OFFICE

UNITED STATES DEPARTMENT OF COMMERCE
United States Patent and Trademark Office
Address: COMMISSIONER FOR PATENTS
P.O. Box 1450
Alexandria, Virginia 22313-1450
www.uspto.gov

APPLICATION NO.	FILING DATE	FIRST NAMED INVENTOR	ATTORNEY DOCKET NO.	CONFIRMATION NO.
12/609,997	10/30/2009	Joseph Andrew Tecza	42495.50	9556

60935 7590 09/19/2011
Edmonds Nolte, PC
16815 ROYAL CREST DRIVE
SUITE 130
HOUSTON, TX 77058

EXAMINER
LOOK, EDWARD K

ART UNIT	PAPER NUMBER
3745	

NOTIFICATION DATE	DELIVERY MODE
09/19/2011	ELECTRONIC

Please find below and/or attached an Office communication concerning this application or proceeding.

The time period for reply, if any, is set in the attached communication.

Notice of the Office communication was sent electronically on above-indicated "Notification Date" to the following e-mail address(es):

docketing@edmondsnolte.com

UNITED STATES PATENT AND TRADEMARK OFFICE

Commissioner for Patents
United States Patent and Trademark Office
P.O. Box 1450
Alexandria, VA 22313-1450
www.uspto.gov

Edmonds Nolte, PC
16815 ROYAL CREST DRIVE
SUITE 130
HOUSTON TX 77058

In re Application of	:	
TECZA, JOSEPH ANDREW , et al.	:	DECISION ON REQUEST TO
Application No. 12/609,997	:	PARTICIPATE IN PATENT
Filed: October 30, 2009	:	PCT/PROSECUTION HIGHWAY
Attorney Docket No. 42495.50	:	PROGRAM AND PETITION
For: VALVE SEQUENCING SYSTEM AND	:	TO MAKE SPECIAL UNDER
METHOD FOR CONTROLLING	:	37 CFR 1.102(a)
TURBOMACHINE ACOUSTIC SIGNATURE		

This is a decision on the request to participate in the Patent Prosecution Highway (PPH) program and the petition under 37 CFR 1.102(a), filed August 22, 2011 to make the above-identified application special.

The request and petition are granted.

A grantable request to participate in the PPH pilot program and petition to make special require:

(1) The U.S. application must validly claim priority under 35 U.S.C. 119(a) to one or more applications filed in the JPO;
(2) Applicant must submit a copy of the allowable/patentable claim(s) from the JPO/PCT application(s) along with an English translation thereof and a statement that the English translation is accurate;
(3) All the claims in the U.S. application must sufficiently correspond or be amended to sufficiently correspond to the allowable/patentable claim(s) in the JPO application(s);
(4) Examination of the U.S. application has not begun;
(5) Applicant must submit a copy of all the office actions from each of the JPO/PCT application(s) containing the allowable/patentable claim(s) along with an English translation thereof and a statement that the English translation is accurate; and
(6) Applicant must submit an IDS listing the documents cited by the JPO examiner in the JPO office action along with copies of documents except U.S. patents or U.S. patent application publications.
In light of the petition being properly submitted, the request to participate in the PPH program and the petition comply with the above requirements. Accordingly, the above-identified application has been accorded "special" status.

The applicant is encouraged to cite and submit all relevant prior art references, if any, to facilitate examination in this application. Upon completion of pre-examination processing, this application will be forwarded to an examiner for examination.

Telephone inquiries concerning this decision should be directed to Henry C. Yuen at 571-272-4485. All other inquiries concerning the examination or status of the application should be directed to Edward Look, SPE of Art Unit 3745, and 571-272-4820 for Class 415 and also accessible in the PAIR system at http://www.uspto.gov/ebc.index.html.

Petition is **granted**.

/Henry C. Yuen/

Henry C. Yuen, Special Programs Examiner
Technology Center 3700 – Mechanical Engineering,
Manufacturing and Products
571-272-4856

UNITED STATES PATENT AND TRADEMARK OFFICE

Commissioner for Patents
United States Patent and Trademark Office
P.O. Box 1450
Alexandria, VA 22313-1450
www.uspto.gov

WYATT, TARRANT & COMBS, LLP
1715 AARON BRENNER DRIVE
SUITE 800
MEMPHIS TN 38120-4367

MAILED

SEP 09 2011

OFFICE OF PETITIONS

In re Application of
MORIN
Application No. 12/610,007
Filed: October 30, 2009
Attorney Docket No. 311636.46

DECISION ON PETITION
TO WITHDRAW
FROM RECORD

This is a decision on the Request to Withdraw as attorney or agent of record under 37 C.F.R. § 1.36(b), filed August 31, 2011.

The request is **NOT APPROVED**.

The request cannot be approved because the change of correspondence address for future correspondence from the Office cannot be accepted. The Office will either change the correspondence address of record to the most current address information provided for the assignee of the entire interest who properly became of record under 37 CFR 3.71 or, if no assignee of the entire interest has properly been made of record under 37 CFR 3.71, the most current address information provided for the first named inventor. 37 CFR 3.71 states:

> *An assignee becomes of record either in a national patent application or a reexamination proceeding by filing a statement incompliance with § 3.73(b) that is signed by a party who is authorized to act on behalf of the assignee.*

According to a review of the Office record, there is currently no Statement under 37 CFR 3.73 of record in the instant application. In this regard, the Office cannot change the correspondence address to the address indicated on the Request to Withdraw filed August 31, 2011.

All future communications from the Office will continue to be directed to the above-listed address until otherwise properly notified by applicant.

Telephone inquiries concerning this decision should be directed to the undersigned at (571) 272- 6735.

/Diane C. Goodwyn/
Diane C. Goodwyn
Petitions Examiner
Office of Petitions

cc: BRANCH BANKING AND TRUST COMPANY
301 COLLEGE STREET
GREENVILLE, SC 29601-2014

SPE RESPONSE FOR CERTIFICATE OF CORRECTION

Paper No.: _____

DATE : December 27, 2010

TO SPE OF : ART UNIT 2823

SUBJECT : Request for Certificate of Correction for Appl. No.: 12/610022 Patent No.: 7825497

CofC mailroom date: 12-15-10

Please respond to this request for a certificate of correction within 7 days.

FOR IFW FILES:

Please review the requested changes/corrections as shown in the **COCIN** document(s) in the IFW application image. No new matter should be introduced, nor should the scope or meaning of the claims be changed.

Please complete the response (see below) and forward the completed response to scanning using document code **COCX**.

FOR PAPER FILES:

Please review the requested changes/corrections as shown in the attached certificate of correction. Please complete this form (see below) and forward it with the file to:

Certificates of Correction Branch (CofC)
Randolph Square – 9D10-A
Palm Location 7580

Magdalene Talley

Certificates of Correction Branch

571-272-0423

Thank You For Your Assistance

The request for issuing the above-identified correction(s) is hereby:
Note your decision on the appropriate box.

- ☒ **Approved** — **All** changes apply.
- ☐ **Approved in Part** — Specify below which changes **do not** apply.
- ☐ **Denied** — State the reasons for denial below.

Formatted: Bullets and Numbering

Comments: The change while in fact switching the dependency of a number of claims (10,11,14 and 16 as well as 9) does not effect the main patentable features which are found in the independent claim 1. Approved.

PTO/SB/20PCT-KR (06-10)
Approved for use through 01/31/2015. OMB 0651-0058
U.S. Patent and Trademark Office; U.S DEPARTMENT OF COMMERCE
Under the Paperwork Reduction Act of 1995, no persons are required to respond to a collection of information unless it displays a valid OMB control number.

REQUEST FOR PARTICIPATION IN THE PATENT COOPERATION TREATY – PATENT PROSECUTION HIGHWAY (PCT-PPH) PILOT PROGRAM BETWEEN THE KOREAN INTELLECTUAL PROPERTY OFFICE (KIPO) AND THE USPTO

Application No.:	12/610,075	First Named Inventor:	Andrew B. Carlson
Filing Date:	October 30, 2009	Attorney Docket No.:	16113-0577001
Title of the Invention:	Convection Cooling of Data Center Using Chimney		

THIS REQUEST FOR PARTICIPATION IN THE PCT-PPH PILOT PROGRAM ALONG WITH THE REQUIRED DOCUMENTS MUST BE SUBMITTED VIA EFS-WEB. INFORMATION REGARDING EFS-WEB IS AVAILABLE AT HTTP://WWW.USPTO.GOV/EBC/EFS_HELP.HTML.

APPLICANT HEREBY REQUESTS PARTICIPATION IN THE PCT-PPH PILOT PROGRAM AND PETITIONS TO MAKE THE ABOVE-IDENTIFIED APPLICATION SPECIAL UNDER THE PCT-PPH PILOT PROGRAM.

The above-identified application is (1) a national stage entry of the corresponding PCT application, or (2) a national stage entry of another PCT application which claims priority to the corresponding PCT application, or (3) a national application that claims domestic/ foreign priority to the corresponding PCT application, or (4) a national application which forms the basis for the priority claim in the corresponding PCT application, or (5) a continuing application of a U.S. application that satisfies one of (1) to (4) above, or (6) a U.S. application that claims domestic benefit to a U.S. provisional application which forms the basis for the priority claim in the corresponding PCT application.

The corresponding PCT application number(s) is/are: PCT/US2010/053927

The international filing date of the corresponding PCT application(s) is/are: October 25, 2010

I. List of Required Documents:

a. **A copy of the latest international work product (WO/ISA, WO/IPEA, or IPER) in the above-identified corresponding PCT application(s)**

☐ is attached.

☑ is not attached because the document is already in the U.S. application.

b. **A copy of all claims which were indicated as having novelty, inventive step and industrial applicability in the above-identified corresponding PCT application(s)**

☑ is attached.

☐ is not attached because the document is already in the U.S. application.

c. **English translations of the documents in a. and b. above are attached (if the documents are not in the English language). A statement that the English translation is accurate is attached for the document in b. above.**

d. **(1) An information disclosure statement listing the documents cited in the international work products (ISR, WO/ISA, WO/IPEA, IPER) of the corresponding PCT application.**

☐ is attached.

☑ has already been filed in the above-identified U.S. application on July 25, 2011

(2) Copies of all documents (except for U.S. patents or U.S. patent application publications)

☐ are attached.

☑ have already been filed in the above-identified U.S. application on July 25, 2011

This collection of information is required by 35 U.S.C. 119, 37 CFR 1.55, and 37 CFR 1.102(d). The information is required to obtain or retain a benefit by the public, which is to file (and by the USPTO to process) an application. Confidentiality is governed by 35 U.S.C. 122 and 37 CFR 1.11 and 1.14. This collection is estimated to take 2 hours to complete, including gathering, preparing, and submitting the completed application form to the USPTO. Time will vary depending upon the individual case. Any comments on the amount of time you require to complete this form and/or suggestions for reducing this burden should be sent to the Chief Information Officer, U.S. Patent and Trademark Office, U.S. Department of Commerce, P.O. Box 1450, Alexandria, VA 22313-1450. DO NOT SEND FEES OR COMPLETED FORMS TO THIS ADDRESS.

Under the Paperwork Reduction Act of 1995, no persons are required to respond to a collection of information unless it displays a valid OMB control number.

REQUEST FOR PARTICIPATION IN THE PCT-PPH PILOT PROGRAM BETWEEN THE KIPO AND THE USPTO

(continued)

Application No.:	12/610,075	First Named Inventor:	Andrew B. Carlson

II. Claims Correspondence Table:

Claims in US Application	Patentable Claims in the corresponding PCT application	Explanation regarding the correspondence
1	3	Amended claim 1 in the US Application substantially corresponds to claim 3 of
		the corresponding PCT application, indicated as patentable
2-3		Claims 2 and 3 in the US Application have been canceled
4-17	4-17	Claims 4-17 (in some cases amended to correct typographical errors) in the US Application
		substantially correspond to claims 4-17 of the corresponding PCT application
18	20	Amended claim 18 in the US Application substantially corresponds to
		claim 20 of the corresponding PCT application, indicated as patentable
19-20		Claims 19 and 20 in the US Application have been canceled
21-35	21-35	Claims 21-35 in the US Application substantially correspond to claims 21-35
		of the corresponding PCT application,
36	4	New claim 36 in the US Application substantially corresponds to claim 4 of
		the corresponding PCT application, indicated as patentable
37-42		New claims 37-42 in the US application have been added and depend,
		directly or indirectly, from new claim 36
43	26	New claim 43 in the US Application substantially corresponds to claim 26 of
		the corresponding PCT application, indicated as patentable
44-52		New claims 44-52 in the US application have been added and depend,
		directly or indirectly, from new claim 43

III. All the claims in the US application sufficiently correspond to the patentable claims in the corresponding PCT application.

Signature /Matthew K. Wernli/	Date February 22, 2012
Name (Print/Typed) Matthew K. Wernli	Registration Number 63,173

Privacy Act Statement

The **Privacy Act of 1974 (P.L. 93-579)** requires that you be given certain information in connection with your submission of the attached form related to a patent application or patent. Accordingly, pursuant to the requirements of the Act, please be advised that: (1) the general authority for the collection of this information is 35 U.S.C. 2(b)(2); (2) furnishing of the information solicited is voluntary; and (3) the principal purpose for which the information is used by the U.S. Patent and Trademark Office is to process and/or examine your submission related to a patent application or patent. If you do not furnish the requested information, the U.S. Patent and Trademark Office may not be able to process and/or examine your submission, which may result in termination of proceedings or abandonment of the application or expiration of the patent.

The information provided by you in this form will be subject to the following routine uses:

1. The information on this form will be treated confidentially to the extent allowed under the Freedom of Information Act (5 U.S.C. 552) and the Privacy Act (5 U.S.C 552a). Records from this system of records may be disclosed to the Department of Justice to determine whether disclosure of these records is required by the Freedom of Information Act.
2. A record from this system of records may be disclosed, as a routine use, in the course of presenting evidence to a court, magistrate, or administrative tribunal, including disclosures to opposing counsel in the course of settlement negotiations.
3. A record in this system of records may be disclosed, as a routine use, to a Member of Congress submitting a request involving an individual, to whom the record pertains, when the individual has requested assistance from the Member with respect to the subject matter of the record.
4. A record in this system of records may be disclosed, as a routine use, to a contractor of the Agency having need for the information in order to perform a contract. Recipients of information shall be required to comply with the requirements of the Privacy Act of 1974, as amended, pursuant to 5 U.S.C. 552a(m).
5. A record related to an International Application filed under the Patent Cooperation Treaty in this system of records may be disclosed, as a routine use, to the International Bureau of the World Intellectual Property Organization, pursuant to the Patent Cooperation Treaty.
6. A record in this system of records may be disclosed, as a routine use, to another federal agency for purposes of National Security review (35 U.S.C. 181) and for review pursuant to the Atomic Energy Act (42 U.S.C. 218(c)).
7. A record from this system of records may be disclosed, as a routine use, to the Administrator, General Services, or his/her designee, during an inspection of records conducted by GSA as part of that agency's responsibility to recommend improvements in records management practices and programs, under authority of 44 U.S.C. 2904 and 2906. Such disclosure shall be made in accordance with the GSA regulations governing inspection of records for this purpose, and any other relevant (*i.e.*, GSA or Commerce) directive. Such disclosure shall not be used to make determinations about individuals.
8. A record from this system of records may be disclosed, as a routine use, to the public after either publication of the application pursuant to 35 U.S.C. 122(b) or issuance of a patent pursuant to 35 U.S.C. 151. Further, a record may be disclosed, subject to the limitations of 37 CFR 1.14, as a routine use, to the public if the record was filed in an application which became abandoned or in which the proceedings were terminated and which application is referenced by either a published application, an application open to public inspection or an issued patent.
9. A record from this system of records may be disclosed, as a routine use, to a Federal, State, or local law enforcement agency, if the USPTO becomes aware of a violation or potential violation of law or regulation.

(12) INTERNATIONAL APPLICATION PUBLISHED UNDER THE PATENT COOPERATION TREATY (PCT)

(19) World Intellectual Property Organization
International Bureau

(43) International Publication Date
5 May 2011 (05.05.2011)

PCT

(10) International Publication Number
WO 2011/053547 A2

(51) International Patent Classification:
G06F 1/20 (2006.01) *H05K 7/20* (2006.01)

(21) International Application Number:
PCT/US2010/053927

(22) International Filing Date:
25 October 2010 (25.10.2010)

(25) Filing Language: English

(26) Publication Language: English

(30) Priority Data:
12/610,075 30 October 2009 (30.10.2009) US

(71) Applicant *(for all designated States except US)*: **EXAFLOP LLC** [US/US]; 1600 Amphitheatre Parkway, Mountain View, California 94043 (US).

(72) Inventor; and
(75) Inventor/Applicant *(for US only)*: **CARLSON, Andrew B.** [US/US]; 53 Parker Avenue, Atherton, California 94027 (US).

(74) Agent: **GOREN, David J.**; Fish & Richardson P.C., P.O. Box 1022, Minneapolis, Minnesota 55440-1022 (US).

(81) Designated States *(unless otherwise indicated, for every kind of national protection available)*: AE, AG, AL, AM, AO, AT, AU, AZ, BA, BB, BG, BH, BR, BW, BY, BZ, CA, CH, CL, CN, CO, CR, CU, CZ, DE, DK, DM, DO, DZ, EC, EE, EG, ES, FI, GB, GD, GE, GH, GM, GT, HN, HR, HU, ID, IL, IN, IS, JP, KE, KG, KM, KN, KP, KR, KZ, LA, LC, LK, LR, LS, LT, LU, LY, MA, MD, ME, MG, MK, MN, MW, MX, MY, MZ, NA, NG, NI, NO, NZ, OM, PE, PG, PH, PL, PT, RO, RS, RU, SC, SD, SE, SG, SK, SL, SM, ST, SV, SY, TH, TJ, TM, TN, TR, TT, TZ, UA, UG, US, UZ, VC, VN, ZA, ZM, ZW.

(84) Designated States *(unless otherwise indicated, for every kind of regional protection available)*: ARIPO (BW, GH, GM, KE, LR, LS, MW, MZ, NA, SD, SL, SZ, TZ, UG, ZM, ZW), Eurasian (AM, AZ, BY, KG, KZ, MD, RU, TJ, TM), European (AL, AT, BE, BG, CH, CY, CZ, DE, DK, EE, ES, FI, FR, GB, GR, HR, HU, IE, IS, IT, LT, LU, LV, MC, MK, MT, NL, NO, PL, PT, RO, RS, SE, SI, SK, SM, TR), OAPI (BF, BJ, CF, CG, CI, CM, GA, GN, GQ, GW, ML, MR, NE, SN, TD, TG).

Published:
— *without international search report and to be republished upon receipt of that report (Rule 48.2(g))*

(54) Title: CONVECTION COOLING OF DATA CENTER USING CHIMNEY

(57) Abstract: A data center includes a bank of computers, a plenum in fluid communication with the bank of computers, and a chimney in fluid communication with the plenum. The chimney is configured to use heat from the bank of computers to sufficiently lower an air pressure in the plenum to cause an air flow across the bank of computers sufficient to cool the bank of computers for normal operation.

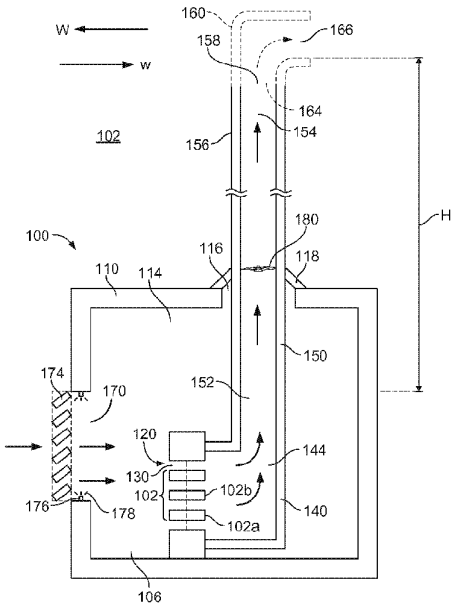

FIG. 1

WO 2011/053547 A2

Convection Cooling of Data Center Using Chimney

TECHNICAL FIELD

This description relates to cooling computers in a data center.

BACKGROUND

Computer data centers are commercial buildings that house a large number of computers, such as thousands or tens of thousands of rack-mounted computer servers and other computing equipment (e.g., storage devices, power supplies, and networking equipment). Typically, computer data centers provide computing services, such as web page hosting, search, e-mail, video, and other services, to a number of distributed remote users.

Because internet-connected users have grown enormously in numbers, and the types of services they demand have grown enormously in complexity, data centers must now provide a quickly increasing amount of computing resources. As a result, the size of data centers has increased, the number of data centers has increased, and because data centers require the use of electronic equipment, the electrical demands of data centers have increased. Because a substantial portion of the electrical power used by data centers is turned into heat, cooling demands of data centers have increased significantly.

SUMMARY

In one aspect, a data center includes a bank of computers, a plenum in fluid communication with the bank of computers, and a chimney in fluid communication with the plenum and configured to use heat from the bank of computers to sufficiently lower an air pressure in the plenum to cause an air flow across the bank of computers sufficient to cool the bank of computers for normal operation.

Implementations can include one or more of the following features. A boost fan may be configured to assist a flow of air from the plenum through the chimney. The boost fan might not be capable of causing a sufficient pressure drop in the plenum to flow sufficient air to cool the bank of computers in an absence of the chimney. The chimney may be insulated to reduce dissipation of heat from a flow of air inside the chimney to a

surrounding environment. The chimney may be configured to absorb heat from a surrounding environment. The chimney may extend at least 50 feet above a bottom of the plenum. The plenum may include baffles configured to separate air within the plenum from air outside of the plenum. A movable cowl may be attached to an upper end of the chimney and configured to direct a chimney opening away from a wind direction. An enclosure may surround the bank of computers and may have formed therein an air inlet and an opening for the chimney. A liquid injector may be configured to apply a liquid, e.g., water, to an inlet flow of air that flows through the bank of computers and into the plenum. A heat exchanger, e.g., an evaporative cooler, may be configured to cool an inlet flow of air that flows through the bank of computers and into the plenum. The bank of computers may include a rack of computers, e.g., at least twenty-two computers. A heat source may be configured to heat an inlet flow of air that flows through the bank of computers and into the plenum. The heat source may be hot air extracted from the plenum or chimney.

In another aspect, a method of providing cooling for a data center includes flowing a flow of air through a bank of computers and into a plenum, flowing the flow of air into a lower portion of a chimney configured to use heat from the bank of computers to lower an air pressure in the plenum, the chimney being configured to use heat from the bank of computers to sufficiently lower the air pressure in the plenum such that the flow of air across the bank of computers is sufficient to cool the bank of computers for normal operation, and flowing the flow of air out of an upper portion of the chimney.

Implementations can include one or more of the following features. The flow of air into the chimney may be boosted with a boost fan configured to flow air from the plenum through the chimney. The boost fan might not be capable of causing a sufficient pressure drop in the plenum to sufficiently cool the bank of computers in an absence of the chimney. The chimney may be insulated to reduce dissipation of heat from the flow of air inside the chimney to a surrounding environment. The chimney may absorb heat from a surrounding environment. The chimney may extend at least 50 feet above a bottom of the plenum. Air within the plenum may be separated from air outside of the plenum by baffles. The bank of computers may be surrounded by an enclosure having formed therein an air inlet and an opening for the chimney. A movable cowl attached to

the upper chimney end may be adjusted to direct a chimney opening away from a wind direction. An inlet flow of air that flows through the bank of computers and into the plenum may be cooled. The cooling may include applying liquid, e.g., water, to the inlet flow of air, or flowing the inlet flow of air through a heat exchanger, e.g., an evaporative cooler. The bank of computers may include a rack of computers, e.g., at least twenty-two computers. An inlet flow of air that flows through the bank of computers and into the plenum may be heated. Heating may include extracting hot air from the plenum or chimney.

Implementations can include one or more of the following advantages. Computers in a data center can be cooled using fewer components, and thus at lower facility construction cost, and using less energy, and thus at lower facility operation cost. For example, by reducing use of fans and heat pumps as compared to conventional data center cooling systems, data center energy efficiency can be increased and data center power consumption can be reduced. Also, reducing an amount of components necessary for cooling the data center can improve reliability of the data center, can reduce costs and time necessary for constructing the data center, can reduce data center maintenance costs, and can reduce an amount of time necessary for bringing the data center online.

DESCRIPTION OF DRAWINGS

FIG. 1 is a cross-sectional side-view schematic representation of a data center.

FIG. 2 is a cross-sectional plan-view schematic representation of the data center of FIG. 1.

FIG. 3 is a cross-sectional plan-view schematic representation of an alternative implementation of a data center.

FIG. 4 is a flow diagram of an implementation of cooling a bank of computers.

Like reference symbols in the various drawings indicate like elements.

DETAILED DESCRIPTION

Data center cooling can be implemented with convection cooling, such as natural convection cooling, which can include use of a chimney. It can be desirable to cool computers in a data center using an apparatus, system, or method that uses as few

components as feasible and that consumes as little energy as feasible. Convection can be used to cause air flow across a bank of computers in a data center to cool the computers. Convection cooling of computers can be implemented with a plenum configured to direct hot air from the bank of computers to a chimney. The chimney can be open to a surrounding environment outside of the data center and can be configured to use convection to cause a flow of air across the bank of computers and up and out of the chimney. A data center cooling system that utilizes convection can reduce power consumption, improve efficiency, and reduce time and expense required for constructing a data center.

FIG. 1 is a cross-sectional side-view schematic representation of a data center 100. FIG. 2 is a cross-sectional plan-view schematic representation of the data center of FIG. 1. Referring to FIGS. 1 and 2, the data center 100 includes an enclosure 110, e.g., a room or a building, that houses a large number of computers or similar heat-generating electronic components. The computers can be arranged in a number of parallel rows and mounted on horizontal trays in vertical racks 102, such as racks 102a, 102b (of course, the computers can be placed in other orientations, e.g., vertical trays). About twenty-two computers can fill a standard 78" high rack. Air may circulate from workspace 106 across the trays. The work space 106 on one side of the racks 102 may, in certain circumstances, be referenced as a “cold aisle,” and the plenum space 144 on the other side of the rack 102 may be considered a “warm aisle.” Together, the collection of racks of computers can provide a bank of computers 120. The enclosure 110 can enclose or house other hardware (not shown) and personnel (not shown) associated with, for example, operation and maintenance of the data center 100. The bank of computers 120 can include servers configured to provide computing services, such as web page hosting, search, e-mail, video, and other services, to a number of distributed remote users.

Computing devices in the racks 102 typically consume electrical power and generate heat, and these computing devices can include heat sinks and heat pipes to dissipate the heat from these computing devices to the air flowing across the trays. A group of racks can be part of a module that includes heat transport structures or mechanisms (not shown) configured to facilitate transfer of heat from the air to coolant

fluid flowing through the bank of computers 120, e.g., water flowing through pipes near the racks 102.

The bank of computers 120 can include vents 130, e.g., spaces between adjacent trays in a rack, fluidically connecting the bank of computers 120 and a plenum space 144 of a plenum. The vents 130 can permit fluid, e.g., air, to flow around and through computing devices or between adjacent computing devices that are part of the rack 102 of computers. The rack 102 of computers can form part of the plenum wall 140, *e.g.*, a side of the plenum. In some implementations, racks of computers form multiple, *e.g.*, opposite, sides of the plenum 140. The plenum space 144 can be a space enclosed by the plenum walls 140 and the bank of computers 120. The plenum walls 140 can separate air in the plenum space 144 from air in an enclosure space 114 that is within the enclosure 110 but outside of the plenum space 144. In some implementations, the plenum walls 140 can include a door (not shown) to facilitate access to the plenum space 144, such as for maintenance of equipment located within the plenum space 144 or of components of the bank of computers 120 accessible from the plenum space 144.

The plenum space 144 of the plenum can be fluidically connected to a chimney 150. In some implementations, the chimney 150 can be fluidically isolated from the enclosure space 114 except through the plenum space 144. The chimney 150 can protrude from the data center 100 through a chimney opening 116 formed in the enclosure 110. In some implementations, chimney flashing 118 can protect an interior of the data center from a surrounding environment 102 that surrounds the data center 100. The chimney 150 can extend a chimney height H above the bank of computers 120, above the bottom of the plenum 140, or above some other suitable reference point. For example, the chimney height H can be more than 50 feet, such as more than 100 feet. Such a chimney can fit substantially within the architectural shell of a multi-story building. In this case, the data center can be located on a bottom floor of a multi-story building and take advantage of the chimney effect with little or no visual impact from the outside. Alternately, a tall chimney of a decommissioned industrial facility could be converted to this use. Taller chimneys, such as up to 350 feet, could extend above the roof or be incorporated into tall structures such as the tower of a wind turbine. The chimney height H can be made sufficiently large so that adequate air flow through the

bank of computers 120, plenum space 144, and chimney 150 can occur primarily be natural convection. That is, it may be desirable to make the chimney height H great enough that natural convection through the chimney 150 can cause sufficient air flow through the computers to adequately cool the computers during certain conditions, such as normal operating conditions.

The chimney 150 can have a lower chimney portion 152 within the enclosure 110 and an upper chimney portion 154 above the enclosure 110. In some implementations, an outer surface of the chimney 156 can be insulated with an insulation (not shown), which may be desirable to prevent dissipation of heat of air within the chimney 150, as discussed further below. The chimney 150 can include a chimney outlet 158 through which air in the chimney can exit the chimney 150 and enter the surrounding environment 102. Air exiting the chimney 150 may be referred to as exhaust air.

Optionally, a cowl 160 can be attached to the chimney 150 at the chimney outlet 158. The cowl 160 can be formed to direct exhaust air to flow out of a cowl outlet 166. In some implementations, the cowl 160 can be movable, such as rotatable, so that a direction of the cowl outlet 166 can be adjustable.

The data center 100 can include an enclosure inlet 170 formed in the enclosure 110. In some implementations, it can be desirable to position the enclosure inlet 170 sufficiently far from the chimney 150 to mitigate or prevent a flow of air from the chimney outlet 158 to the enclosure inlet 170. Such flow of air can be undesirable because exhaust air exiting the chimney outlet 158 may be at a higher temperature than the surrounding environment 102. Flow of exhaust air into the enclosure inlet 170 may thus reduce a cooling effectiveness of air flowing through the bank of computers. Further, such flow of exhaust air into the enclosure inlet 170 may decrease convection, which may reduce a flow rate of air through the bank of computers, which may further reduce a cooling effectiveness of air flowing through the bank of computers 120. Such recirculation of exhaust air can halt convection if a temperature difference between air in the chimney 150 and air flowing into the bank of computers becomes too small to sustain convection through the chimney 150. Such a failure to sustain convection can interrupt cooling of the computers. In some implementations, increasing the height H of the chimney 150 can reduce a possibility of such flow of exhaust air into the enclosure inlet

170. Alternatively or additionally, the enclosure inlet 170 can be moved farther away from the chimney 150 in a horizontal direction, e.g., a direction perpendicular to a length direction of the chimney 150.

In some implementations, the enclosure inlet 170 can include a heat exchanger 174 configured to cool a flow of air entering the data center 100. The heat exchanger 174 can include, for example, an evaporative cooler. The enclosure inlet 170 can also include injectors 176 configured to apply liquid 178, such as water, to the flow of air entering the data center 100, which may be referred to as an inlet flow of air. Evaporation of the liquid 178 may cool the inlet flow of air, as discussed further below. Alternatively, the injectors 176 can inject some other cooling fluid, such as a gas, into the inlet flow of air. Cooling the flow of air through the enclosure inlet 170 can improve efficacy of cooling of the bank of computers such as by improving convection through the chimney 150, as discussed further below.

Optionally, the plenum 140 or the chimney 150 can include an optional boost fan 180, as discussed further below. The boost fan 180 can be positioned, for example, in the lower chimney portion 152, in the upper chimney portion 156, in a top of the plenum 140 where the plenum 140 joins the chimney 150, or in some other suitable location. The vents 130, plenum 140, chimney 150, optional cowl 160, enclosure inlet 170, and related components, can be collectively referred to as parts of a cooling system of the data center 100.

FIG. 3 is a cross-sectional plan-view schematic representation of an alternative implementation of a data center 100. A plenum space 144′ is at least partially enclosed by a plenum 140′ and the bank of computers 120. The plenum space 144′ is further enclosed by baffles 320 such that a portion of the plenum space 144 is fluidically connected to the enclosure space 114 through baffle spaces 324. The baffles 324 can be configured to restrict flow of air through the baffles 324, thereby at least partially separating air within the plenum space 144′ from air in the enclosure space 114. In some implementations, the baffles 324 can be sufficiently large to allow access to the plenum space 144′ by a human being, such as for maintenance of equipment located within the plenum space 144′ or of components of the bank of computers 120 accessible from the

plenum space 144′. In some other implementations, the plenum 140 can include a door (not shown) to facilitate access to the plenum space 144′.

FIG. 4 is a flow diagram of an implementation of cooling a bank of computers 100. Directions of flows of air are indicated by arrows in FIGS. 1-3. Air can enter the data center 100 through the enclosure inlet 170. In some implementations, the inlet flow of air flowing through the enclosure inlet 170 can be cooled (step 410). For example, a cooling fluid (not shown) can flow through the heat exchanger 174 to cool the inlet flow of air. The cooling fluid can be cooled, for example, by a chiller (not shown) located outside of the data center 100. In some other implementations, the inlet flow of air can flow through passages (not shown) and a liquid, such as water, can be applied to the passages to evaporatively cool the passages, which can thereby cool the inlet flow of air. In some implementations, the injectors 176 can apply liquid 178 to air flowing through the enclosure inlet 170, and the liquid 178 can be, for example, water. Application of the liquid 178 by the injectors 176 can be performed, for example, by spraying the liquid 178 into the inlet flow of air. For example, the liquid 178 can be applied or sprayed in droplet, nebulized, or atomized form. Evaporation of the liquid 178 in the inlet flow of air may cool the inlet flow of air. Also, in some implementations, the inlet flow of air flowing through the enclosure inlet 170 can be heated (step 410). For example, warm water can be circulated through the heat exchanger 174, or some of the warm air from the plenum 144 or stack 154 can be recirculated, to provide heating.

Air can be flowed through the bank of computers 120, through the plenum 140, and into the chimney 150 (step 420). Air entering the plenum 140 and the chimney 150, having absorbed heat from the bank of computers 120, can have a relatively higher temperature with respect to the surrounding environment 102. Relatively hot air in the chimney 150 may therefore have buoyancy with respect to the surrounding environment 102. This buoyancy may reduce an air pressure in the plenum space 144 relative to the enclosure space 114, and this effect can be referred to as a stack effect. The reduction of air pressure in the plenum space 144 relative to the enclosure space 114 may be referred to as an air pressure drop.

The stack effect can facilitate natural convection of air through the data center 100. The cooling system can be designed such that the stack effect is sufficient to cause a

sufficient air pressure drop in the plenum space 144 to effect a sufficient flow of air through the enclosure inlet 170, through the bank of computers 120, through the plenum 140, and through and out of the chimney 150 to facilitate normal operation of the bank of computers 120. In particular, the height H of the chimney 150 can be designed to cause a sufficient air pressure drop in the plenum space 144. As an example, in some implementations, sufficient cooling of the data bank 120 may be achieved where a air pressure in the plenum space 144 is 0.1 bar less than an air pressure in the enclosure space 114. In general, the pressure difference can be at least about 0.5 milli-bar (0.2 in-wg), which is representative of the pressure drop through server trays or across fin-tube heat exchanger coils. In some implementations, an air pressure drop caused by the stack effect can be calculated using the following relationship:

$$\Delta P = C \cdot a \cdot h \cdot (\frac{1}{T_o} - \frac{1}{T_i})$$, where:

ΔP = pressure difference, in Pascals (Pa);

C = 0.0342, a constant;

a = atmospheric pressure, in Pa;

h = height of chimney, in meters (m);

T_o = absolute temperature outside of the chimney, in degrees Kelvin (K); and

T_i = absolute average temperature inside of the chimney, in K.

The temperature T_o can be a temperature of the surrounding environment 102, which temperature may be less than, greater than, or equal to a temperature of air in the enclosure space 114.

In some implementations, a flow rate of air caused by the stack effect can be calculated using the following relationship:

$$Q = C \cdot A \sqrt{2 \cdot g \cdot h \cdot \frac{T_i - T_o}{T_i}}$$, where:

Q = flue gas flow rate, in square meters per second (m^3/s);

A = cross-sectional area of chimney, in m^2 (assuming it has a constant cross-section);

C = discharge coefficient (usually taken to be from 0.65 to 0.70);

g = gravitational acceleration at sea level, which is typically 9.807 meters per second squared (m/s^2);

H = height of chimney, in m;

Ti = absolute average temperature inside of the chimney, in K; and

To = absolute outside air temperature, in K.

In general, the term 'stack effect', refers to flows induced by buoyancy effects due to temperature differences between separate columns of air inside and outside the stack.

For example, where a temperature of a surrounding environment is 50 degrees Fahrenheit and a temperature of air in the plenum 144 and the chimney 150 is 140 degrees Fahrenheit, the chimney can have a height H of 55 feet (or more) to induce a 0.5 millibar pressure difference. Using the equation for induced draft, this chimney could exhaust 4.4 m^3/s of air for each 1 square meter cross section area. The pressure difference and rate of induced flow is degraded during hot summer days but is enhanced during operation on cold winter days. Selection of the actual chimney height depends on the prevailing weather conditions at the desired site as well as such factors as an economic tradeoff such as a total cost of ownership (TCO) to balance the cost of the stack structure against the savings in fan power and energy consumption.

Increasing a height H of the chimney 150 may increase the air pressure drop in the plenum space 144, which may improve cooling effectiveness of the cooling system. However, it may be desirable to minimize chimney height H to minimize construction costs, to minimize a visual impact of the chimney 150 on a surrounding landscape, or for other purposes. It may therefore be desirable to design the cooling system with a chimney height H that is a minimum necessary to achieve sufficient cooling of the bank of computers 120.

As discussed above, the stack effect may be a result of buoyancy of air in the chimney 150, which may in turn be caused by an elevated temperature of air in the chimney 150 as compared to the surrounding environment 102, the enclosure space 114, or both. Therefore, dissipation of heat of air within the chimney 150 to the surrounding environment 150 or to the enclosure space 114 may decrease the air pressure drop in the plenum space 144. That is, in the mathematical relationships described above, decreasing T_i may decrease ΔP. Increasing insulation of the chimney 150 can reduce loss of heat

from air in the chimney 150 to the surrounding environment 102 or to the enclosure space 114. However, insulation may increase a size of the chimney 150, and it may also be desirable to minimize chimney size to minimize construction costs, to minimize a visual impact of the chimney 150 on a surrounding landscape, or for other purposes. In some implementations, the stack effect may be improved by painting or coating the chimney 150 with a heat absorbing paint or coating. For example, the chimney 150 may absorb heat from sunlight (not shown), and such absorption may be facilitated by a paint or coating. Absorption of heat from sunlight by the chimney 150 can increase a temperature of air in the chimney 150 and thereby improve the stack effect.

Design of the chimney 150 and other cooling system components may also account for varying conditions of the bank of computers 120, the surrounding environment 102, and other components of cooling system and the data center 100. For instance, heat generated by the bank of computers 120 may vary with a degree of use of the bank of computers 120. As an example, decreasing heat generated by the bank of computers 120 may result in a relatively decreased temperature of air in the plenum space 144 and the chimney 150, which may reduce the stack effect. That is, as a temperature of air in the chimney 150 becomes closer to a temperature of the surrounding environment 102, the stack effect may be reduced and therefore the air pressure drop in the plenum space 144 may be reduced. This reduction in the stack effect may be acceptable in some implementations where a need for cooling is reduced when heat generation by the bank of computers 120 is reduced. However, the cooling system may need to be designed such that reduction in heat generation by the bank of computers 120 does not result in a large enough reduction of the stack effect to halt flow of air through the chimney 150 and thereby interrupt cooling of the bank of computers 120. Conversely, increasing heat generated by the bank of computers 120 may increase the stack effect, but in some implementations, this increase in the stack effect may be insufficient to adequately cool the bank of computers 120 for normal operation. To facilitate adequate cooling of the bank of computers 120, heat generation of the bank of computers 120 may be limited, or the cooling system may be designed to adequately cool the bank of computers 120 within a foreseeable range of heat generation by the bank of computers 120. As another example, increasing a temperature of the surrounding environment 102 may bring the

temperature of the surrounding environment 102 closer to the temperature of air in the chimney 150, which may reduce the stack effect and thereby reduce the air pressure drop in the plenum space 144. To account for changes in heat generation by the bank of computers 120, temperatures of the surrounding environment 102 or the enclosure space 114, or other system variables, the chimney 150 and other cooling system components can be designed to sufficiently cool the bank of computers 120 within a desired range of foreseeable operating conditions.

In some implementations, capabilities of the cooling system can be supplemented or augmented to extend a range of operating conditions in which the cooling system can sufficiently cool the bank of computers 120. As an example, cooling the flow of air through the enclosure inlet 170 can improve convection by reducing a temperature of air flowing through the bank of computers 120 and into the plenum space 144. Cooling the flow of air through the enclosure inlet 170 can thus, for example, enable convection and sufficient cooling to be sustained in relatively greater temperatures of the surrounding environment 102 for a given chimney height H. Alternatively or in addition, the necessary chimney height H for a given set of environmental conditions may be reduced. Further, the optional boost fan 180 can supplement the air pressure drop in the plenum space 144, such as during extreme operating conditions, as discussed further below.

Flow of air from the plenum 140 through the chimney 150 can be increased or boosted by the boost fan 180, which can increase the air pressure drop in the plenum space 144 (step 430). In some implementations, the boost fan 180 increases a flow of air through the chimney 150, which can increase flow of air through the vents 130 and may thereby improve cooling of the bank of computers 120. Boosting of air flow into the chimney 150 can include increasing a flow rate of air through the chimney 150. For example, the boost fan 180 can be sufficiently powerful to facilitate adequate cooling of the bank of computers 120 when the boost fan 180 is implemented in conjunction with the chimney 150. That is, in some implementations, the boost fan 180 may lack sufficient power to adequately cool the bank of computers 120 in an absence of the chimney 150. In some implementations, the boost fan 180 is configured to initiate a flow of air through the chimney 150, and after such initiation, the boost fan 180 can be switched off, bypassed, or both. Such an initiation boost can, in some implementations,

be useful to initiate convection flow of air through the chimney 150. In extreme operating conditions, such as relatively high temperature of the surrounding environment 102 or relatively great heat generation by the bank of computers 120, the boost fan 180 can increase the air pressure drop in the plenum space 144 and may thereby enhance cooling capacity of the cooling system.

In some implementations, the chimney height H could be selected to generate sufficient flow of air for cooling the bank of computers 120, without use of the boost fan 180, on all but some number of days in an average year, based on, for example, average yearly temperature records for a particular surrounding environment 102. For example, the chimney height H can be selected to provide sufficient natural convection cooling of the bank of computers 120 up to a certain threshold temperature of the surrounding environment 102, the threshold temperature being less than anticipated peak temperatures of the surrounding environment 102. On days when the temperature of the surrounding environment 102 exceeds the threshold temperature, the boost fan 180 may be activated to supplement the flow of air through the chimney 150 so as to sufficiently cool the bank of computers 120. As an example, the chimney height H can be selected so as to sufficiently cool the surrounding environment without using of the boost fan 180 during more than 50% of the days of an average year, such as during 90% or more of the days of an average year. Metrics other than days can be used. For example, the chimney height H can be selected to sufficiently cool the bank of computers 150, without use of the boost fan 180, during some number of hours or minutes of an average year. Temperature data for an average expected year can be based on records of temperatures at or near a data center location. Also, on days when the boost fan 180 must be used to achieve sufficient cooling, the boost fan 180 may not provide flow of air sufficient to cool the bank of computers 120 without the chimney 150. Instead, the data center 100 may be configured such that use of both the chimney 150 and the boost fan 180 may be necessary to achieve sufficient cooling.

Air can be flowed out of the chimney 150 through the chimney outlet 158 (step 440). Optionally, air can flow from the chimney outlet 158 into a cowl inlet 164 of the optional cowl 160. In implementations that include a cowl 160 that is adjustable, the cowl 160 can be adjusted to direct air out of the cowl outlet 166 in a particular direction.

For example, the cowl 160 can be adjusted to direct air exiting the chimney 150 in a direction at an angle of least 90° from a wind direction W (see FIG. 1, the wind is following with a wind velocity w opposite the wind direction W) (step 450). That is, it can be desirable to direct air exiting the chimney 150 in a direction away from, e.g., opposite, the wind direction W from which a wind is flowing (see FIG. 1). In some implementations, directing air in a direction opposite the wind direction W can increase the flow of air through the chimney 150. Without being limited to any particular theory, the increase in air flow may be a result of a Bernoulli effect that occurs as wind flows around and past the cowl 160. That is, flow of wind around and past the cowl 160 may decrease an air pressure at the cowl outlet 166, which may increase a flow rate of air through the chimney 150 and increase the air pressure drop in the plenum space 144. In some implementations, the cowl 160 can be designed to maximize a pressure drop at the cowl outlet 166 caused by the Bernoulli effect by, for example, maximizing a wind velocity w past the cowl outlet 166.

The above-described implementations can provide none, some, or all of the following advantages. By reducing use of fans and heat pumps as compared to conventional data center cooling systems, data center energy efficiency can be increased and data center power consumption can be reduced. Also, reducing an amount of components necessary for cooling the data center can improve reliability of the data center, can reduce costs and time necessary for constructing the data center, can reduce data center maintenance costs, and can reduce an amount of time necessary for bringing the data center online.

A number of embodiments of the invention have been described. Nevertheless, it will be understood that various modifications may be made without departing from the spirit and scope of the invention. For example, the chimney can be oriented other than vertical, such as angled on or along a side of a hill. As another example, the chimney can be substantially contained within the enclosure, and the enclosure may be an atrium or some other structure with a relatively high ceiling, which may be open to the surrounding environment. In some implementations, the enclosure can be omitted and the data center can be open to the surrounding environment. As an additional example, the chimney can be in fluid communication with heat-generating equipment other than a bank of

computers. Heat may be added to the chimney to enhance the stack effect. Accordingly, other embodiments are within the scope of the following claims.

WHAT IS CLAIMED IS:

1. A data center, comprising:

a bank of computers;

a plenum in fluid communication with the bank of computers; and

a chimney in fluid communication with the plenum and configured to use heat from the bank of computers to sufficiently lower an air pressure in the plenum to cause an air flow across the bank of computers sufficient to cool the bank of computers for normal operation.

2. The system of claim 1, further comprising:

a boost fan configured to assist a flow of air from the plenum through the chimney.

3. The system of claim 2, wherein the boost fan is not capable of causing a sufficient pressure drop in the plenum to flow sufficient air to cool the bank of computers in an absence of the chimney.

4. The system of claim 1, wherein the chimney is insulated to reduce dissipation of heat from a flow of air inside the chimney to a surrounding environment.

5. The system of claim 1, wherein the chimney is configured to absorb heat from a surrounding environment.

6. The system of claim 1, wherein the chimney extends at least 50 feet above a bottom of the plenum.

7. The system of claim 1, wherein the plenum includes baffles configured to separate air within the plenum from air outside of the plenum.

8. The system of claim 1, further comprising:

a movable cowl attached to an upper end of the chimney and configured to direct a chimney opening away from a wind direction.

9. The system of claim 1, further comprising:

an enclosure surrounding the bank of computers and having formed therein an air inlet and an opening for the chimney.

10. The system of claim 1, further comprising:

a liquid injector configured to apply a liquid to an inlet flow of air that flows through the bank of computers and into the plenum

11. The system of claim 10, wherein the liquid includes water..

12. The system of claim 1, further comprising:

a heat exchanger configured to cool an inlet flow of air that flows through the bank of computers and into the plenum.

13. The system of claim 12, wherein the heat exchanger includes an evaporative cooler.

14. The system of claim 1, wherein the bank of computers comprises a rack of computers.

15. The system of claim 14, wherein the bank of computers comprises at least twenty-two computers.

16. The system of claim 1, further comprising a heat source configured to heat an inlet flow of air that flows through the bank of computers and into the plenum.

17. The system of claim 16, wherein the heat source is hot air extracted from the plenum or chimney.

18. A method of providing cooling for a data center, comprising:

flowing a flow of air through a bank of computers and into a plenum;

flowing the flow of air into a lower portion of a chimney configured to use heat from the bank of computers to lower an air pressure in the plenum, the chimney being configured to use heat from the bank of computers to sufficiently lower the air pressure in the plenum such that the flow of air across the bank of computers is sufficient to cool the bank of computers for normal operation;

flowing the flow of air out of an upper portion of the chimney.

19. The method of claim 18, further comprising:

boosting the flow of air into the chimney with a boost fan configured to flow air from the plenum through the chimney.

20. The method of claim 19, wherein the boost fan is not capable of causing a sufficient pressure drop in the plenum to sufficiently cool the bank of computers in an absence of the chimney.

21. The method of claim 18, wherein the chimney is insulated to reduce dissipation of heat from the flow of air inside the chimney to a surrounding environment.

22. The method of claim 18, wherein the chimney is configured to absorb heat from a surrounding environment.

23. The method of claim 18, wherein the chimney extends at least 50 feet above a bottom of the plenum.

24. The method of claim 18, wherein the plenum includes baffles configured to separate air within the plenum from air outside of the plenum.

25. The method of claim 18, wherein the bank of computers is surrounded by an enclosure having formed therein an air inlet and an opening for the chimney.

26. The method of claim 18, further comprising:

adjusting a movable cowl attached to the upper chimney end to direct a chimney opening away from a wind direction.

27. The method of claim 18, further comprising:

cooling an inlet flow of air that flows through the bank of computers and into the plenum.

28. The method of claim 27, wherein the cooling includes applying liquid to the inlet flow of air.

29. The method of claim 28, wherein the liquid includes water.

30. The method of claim 27, wherein the cooling includes flowing the inlet flow of air through a heat exchanger.

31. The method of claim 30, wherein the heat exchanger includes an evaporative cooler.

32. The method of claim 18, wherein the bank of computers comprises a rack of computers.

33. The method of claim 31, wherein the bank of computers comprises at least twenty-two computers.

34. The method of claim 18, further comprising heating an inlet flow of air that flows through the bank of computers and into the plenum.

35. The system of claim 34, wherein heating comprises extracting hot air from the plenum or chimney.

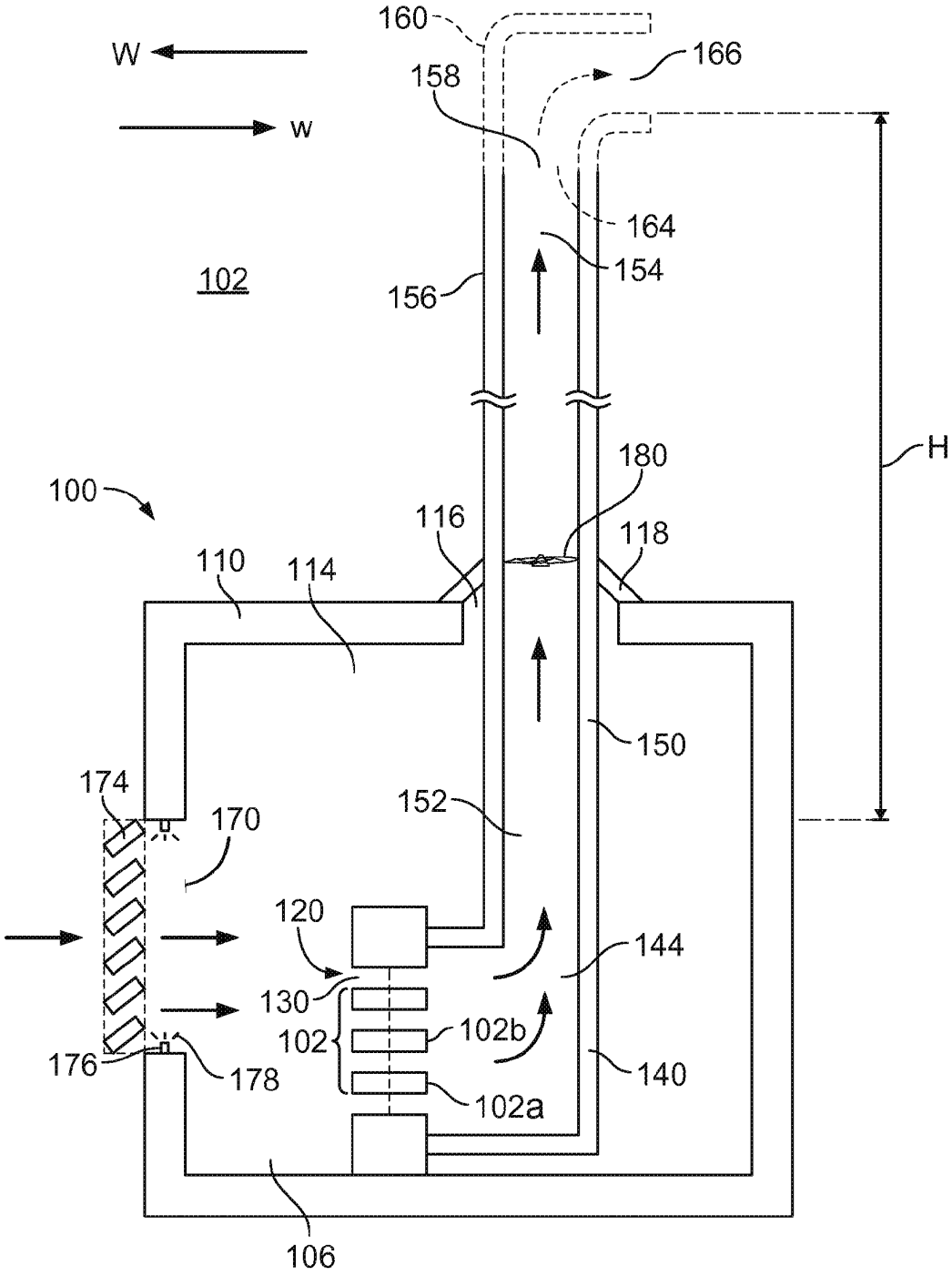
160
W
166
158
w
164
154
102
156
H
180
100
116
118
110
114
150
174
152
170
120
144
130
102
102b
176
178
140
102a
106

FIG. 1

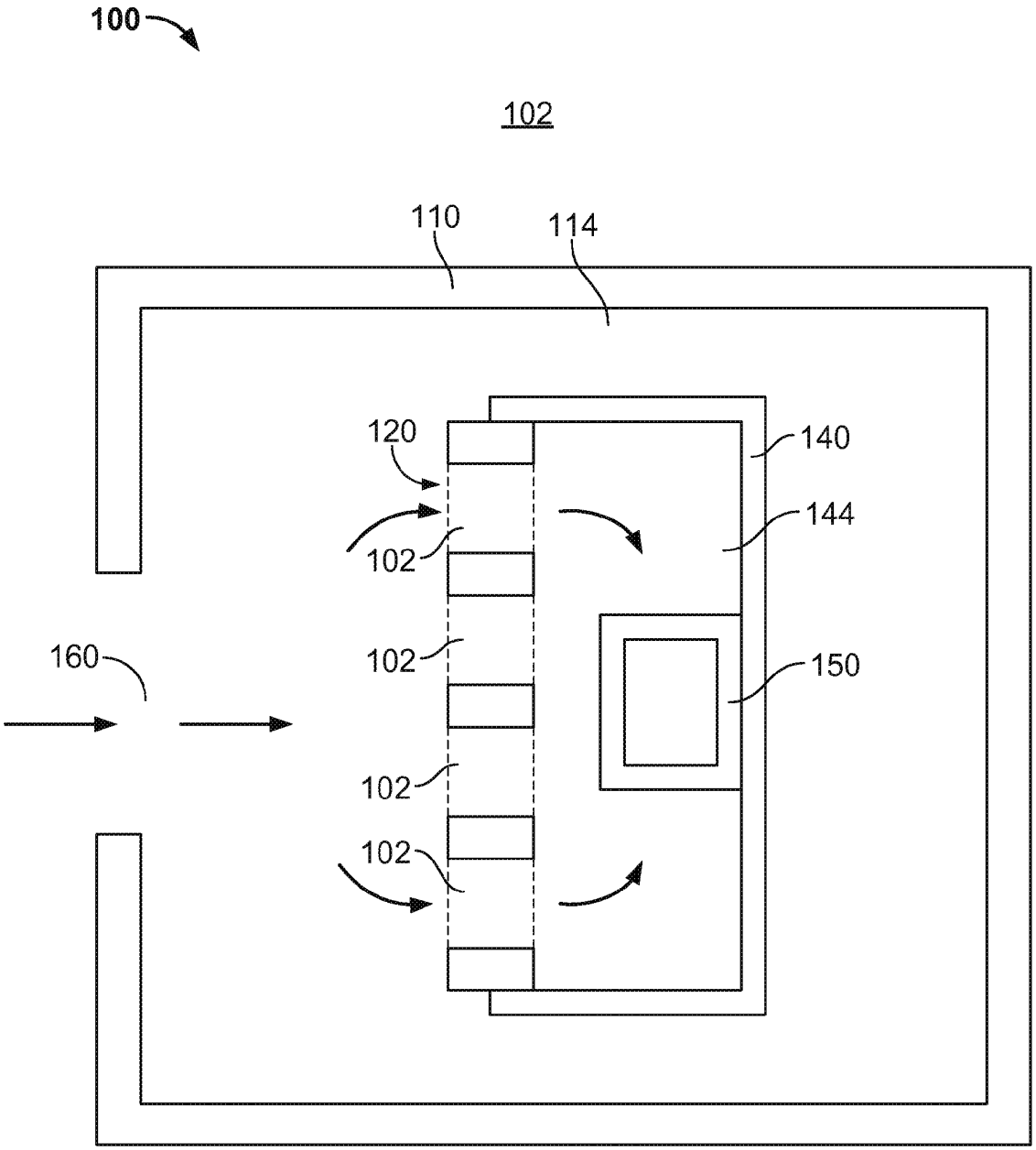

FIG. 2

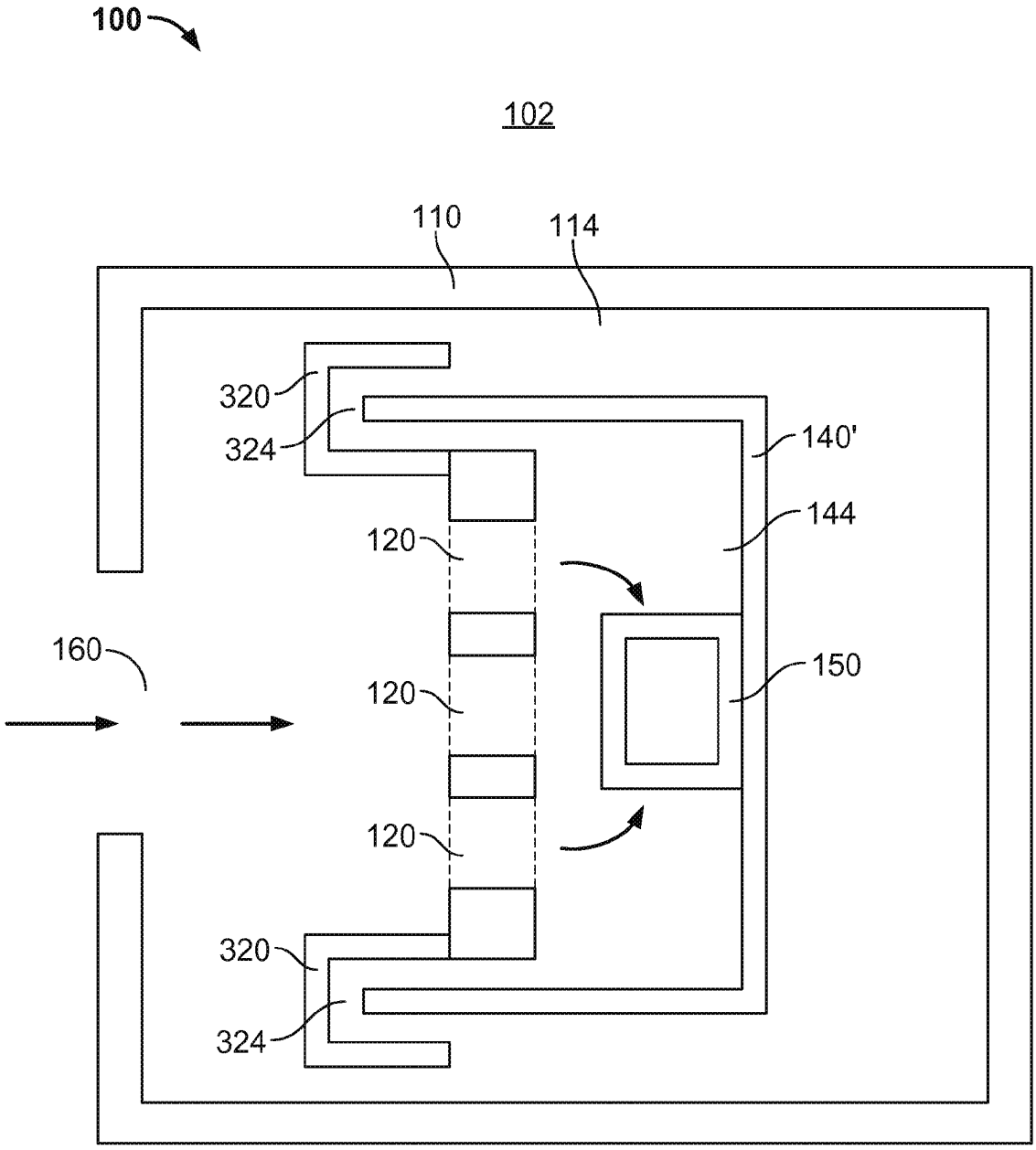

FIG. 3

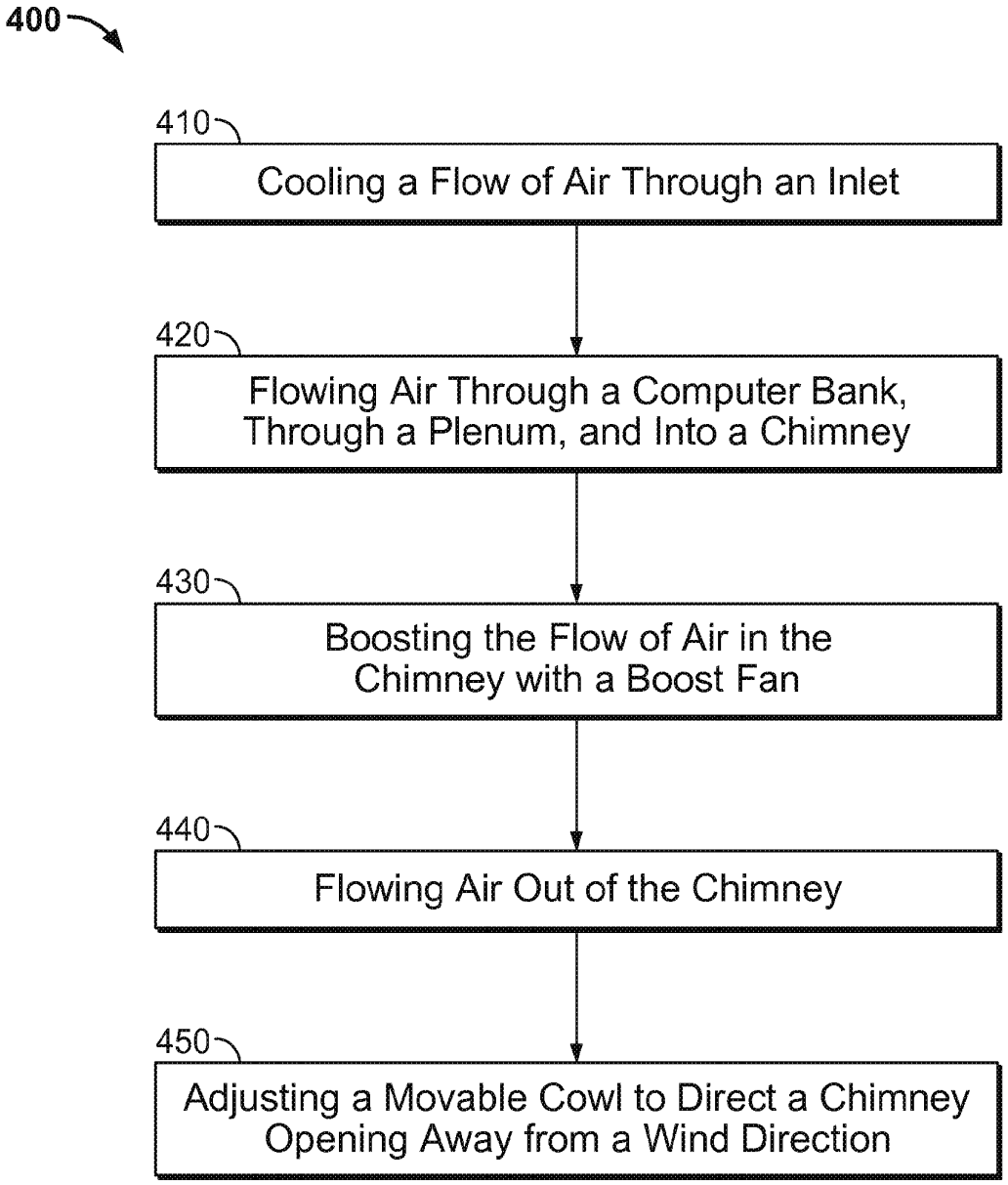
400
410
Cooling a Flow of Air Through an Inlet
420
Flowing Air Through a Computer Bank, Through a Plenum, and Into a Chimney
430
Boosting the Flow of Air in the Chimney with a Boost Fan
440
Flowing Air Out of the Chimney
450
Adjusting a Movable Cowl to Direct a Chimney Opening Away from a Wind Direction

FIG. 4

UNITED STATES PATENT AND TRADEMARK OFFICE

Commissioner for Patents
United States Patent and Trademark Office
P.O. Box 1450

MAILED
APR 02 2012
OFFICE OF PETITIONS

FISH & RICHARSON P.C.
P.O. BOX 1022
MINNEAPOLIS MN 55440-1022

In re Application of
Andrew B. CARLSON
Application No. 12/610,075
Filed: October 30, 2009
Atty. Docket No.: 16113-0577001
For: CONVECTION COOLING OF DATA CENTER USING CHIMNEY

: DECISION ON REQUEST TO
: PARTICIPATE IN PCT-PPH PROGRAM
: AND PETITION TO MAKE SPECIAL
: UNDER 37 CFR 1.102(a)

This is a decision on the request to participate in the PCT Patent Prosecution Highway (PCT-PPH) program and the petition under 37 CFR 1.102(a), filed February 22, 2012, to make the above-identified application special.

The request and petition are **GRANTED.**

A grantable request to participate in the PCT –PPH program and petition to make special under 37 CFR 1.102(a) require:

(1) the U.S. application must have an eligible relationship to one or more PCT application where the ISA or IPEA are the JPO, EPO, KIPO, IPAU, Russia, Spain, Finland, Austria, or USPTO;

(2) at least one claim in the PCT application has novelty, inventive step, and industrial applicability and must be free of any observations in Box VIII in the latest work product in the international stage or applicant must identify and explain why the claim(s) is/are not subject to the observation in Box VIII;

(3) applicant must submit a copy of the claim(s) from the PCT application(s) that have novelty, inventive step, and industrial applicability along with an English translation thereof and a statement that the English translation is accurate, if the claims are not in the English language;

(4) all the claims in the U.S. application must sufficiently correspond or be amended to sufficiently correspond to the claim(s) that have novelty, inventive step, and industrial applicability in the PCT application(s);

(5) examination of the U.S. application has not begun;

(6) applicant must submit a copy of the latest international work product from the PCT application indicating that the claim(s) have novelty, inventive step, and industrial applicability along with an English translation thereof;

(7) applicant must submit an IDS listing the documents cited by the PCT examiner in the international work product along with copies of documents except U.S. patents or U.S. patent application publications; and

(8) applicant is required to submit a claims correspondence table in English which indicates how all the claims in the U.S. application correspond to the claims indicated as having novelty, inventive step, and industrial applicability in the latest international work product.

The request to participate in the PCT-PPH program and petition comply with the above requirements. Accordingly, the above-identified application has been accorded "special" status.

Telephone inquiries concerning this decision should be directed to Robert DeWitty, Petitions Attorney, Office of Petitions (571-272-8427). All other inquiries concerning the examination or status of the application is accessible in the PAIR system at http://www.uspto.gov/ebc.index.html.

This application will be forwarded to Technology Center Art Unit 3749 for action commensurate with this decision.

David Bucci
Petitions Examiner
Office of Petitions

UNITED STATES PATENT AND TRADEMARK OFFICE

Commissioner for Patents
United States Patent and Trademark Office
P.O. Box 1450
Alexandria, VA 22313-1450
www.uspto.gov

MAILED

SEP 27 2010

OFFICE OF PETITIONS

SNELL & WILMER LLP (OC0
600 Anton Boulevard
Suite 1400
Costa Mesa, CA 92626

In re Application of	:	
Daniel T. Filmore, et al.	:	
Application No. 12/610,110	:	DECISION ON PETITION
Filed: October 30, 2009	:	TO WITHDRAW
Attorney Docket No. 57753-0100	:	FROM RECORD
	:	

This is a decision on the Request to Withdraw as attorney or agent of record under 37 C.F.R. § 1.36(b), filed August 27, 2010.

The request is **APPROVED**.

A grantable request to withdraw as attorney/agent of record must be signed by every attorney/agent seeking to withdraw or contain a clear indication that one attorney is signing on behalf of another/others. A request to withdraw will not be approved unless at least 30 (thirty) days would remain between the date of approval and the later of the expiration date of a time to file a response or the expiration date of the maximum time period which can be extended under 37 C.F.R. § 1.136(a).

The request was signed by J. Rick Tache on behalf of all attorneys of record who are associated with Customer Number 21611. All attorneys/agents associated with the Customer Number 21611 have been withdrawn. Applicant is reminded that there is no attorney of record at this time.

All future correspondence will be directed to the first named inventor Daniel T. Filmore at the address indicated below.

Telephone inquiries concerning this decision should be directed to Terri Johnson at 571-272-2991.

Terri Johnson
Petitions Examiner
Office of Petitions

cc: **Daniel T. Filmore**
758 South Coast Hwy
Laguna Beach, CA 92651

UNITED STATES PATENT AND TRADEMARK OFFICE

UNITED STATES DEPARTMENT OF COMMERCE
United States Patent and Trademark Office
Address: COMMISSIONER FOR PATENTS
P.O. Box 1450
Alexandria, Virginia 22313-1450
www.uspto.gov

APPLICATION NUMBER	FILING OR 371(C) DATE	FIRST NAMED APPLICANT	ATTY. DOCKET NO./TITLE
12/610,110	10/30/2009	Daniel T. Fillmore	57753-0100

CONFIRMATION NO. 9753

POWER OF ATTORNEY NOTICE

OC000000043656290

21611
SNELL & WILMER LLP (OC)
600 ANTON BOULEVARD
SUITE 1400
COSTA MESA, CA 92626

Date Mailed: 09/22/2010

NOTICE REGARDING CHANGE OF POWER OF ATTORNEY

This is in response to the Power of Attorney filed 08/27/2010.

- The withdrawal as attorney in this application has been accepted. Future correspondence will be mailed to the new address of record. 37 CFR 1.33.

/tsjohnson/

Office of Data Management, Application Assistance Unit (571) 272-4000, or (571) 272-4200, or 1-888-786-0101

UNITED STATES PATENT AND TRADEMARK OFFICE

Commissioner for Patents
United States Patent and Trademark Office
P.O. Box 1450
Alexandria, VA 22313-1450
www.uspto.gov

J. ANDREW MCKINNEY & ASSOC., LLC
PO BOX 1290
MILLERSVILLE MD 21108

MAILED

JAN 03 2011

OFFICE OF PETITIONS

In re Application of	:	
Chunling ZHAO, et al	:	
Application No. 12/610,116	:	DECISION ON PETITION
Filed: October 30, 2009	:	
Attorney Docket No. 2640.190 NP	:	

This is a decision on the petition under the unintentional provisions of 37 CFR 1.137(b), filed December 4, 2010, to revive the above-identified application.

The petition is **GRANTED**.

The application became abandoned for failure to reply in a timely manner to the Notice to File Corrected Application Papers (Notice), mailed January 28, 2010. The Notice set a period for reply of two (2) months from the mail date of the Notice. No extensions of time under the provisions of 37 CFR 1.136(a) were obtained. Accordingly, the application became abandoned on March 29, 2010.

The petition satisfies the requirements of 37 CFR 1.137(b) in that petitioner has supplied (1) the reply in the form of replacement drawings; (2) the petition fee of $810; and (3) an adequate statement of unintentional delay.

37 CFR 1.137(b)(3) requires a statement that "the entire delay in filing the required reply from the due date for the reply until the filing of a grantable petition pursuant to 37 CFR 1.137(b) was unintentional." Since the statement appearing in the petition varies from the language required by 37 CFR 1.137(b)(3), the statement is being construed as the required statement. Petitioner must notify the Office if this is **not** a correct reading of the statement appearing in the petition.

There is no indication that the person signing the petition was ever given a power of attorney to prosecute the application. If the person signing the petition desires to receive future correspondence regarding this application, the appropriate power of attorney document must be submitted.

Telephone inquiries concerning this decision should be directed to the undersigned at (571) 272-6735.

This application is being referred to the Office of Data Management for further pre-examination processing.

/Diane C. Goodwyn/
Diane C. Goodwyn
Petitions Examiner
Office of Petitions

UNITED STATES PATENT AND TRADEMARK OFFICE

UNITED STATES DEPARTMENT OF COMMERCE
United States Patent and Trademark Office
Address: COMMISSIONER FOR PATENTS
P.O. Box 1450
Alexandria, Virginia 22313-1450
www.uspto.gov

APPLICATION NO.	FILING DATE	FIRST NAMED INVENTOR	ATTORNEY DOCKET NO.	CONFIRMATION NO.
12/610,134	10/30/2009	Daniel Fleischer	PA4923US	9806

22830 7590 08/04/2010
CARR & FERRELL LLP
2200 GENG ROAD
PALO ALTO, CA 94303

EXAMINER

ART UNIT	PAPER NUMBER
1621	

MAIL DATE	DELIVERY MODE
08/04/2010	PAPER

Please find below and/or attached an Office communication concerning this application or proceeding.

The time period for reply, if any, is set in the attached communication.

UNITED STATES PATENT AND TRADEMARK OFFICE

Commissioner for Patents
United States Patent and Trademark Office
P.O. Box 1450
Alexandria, VA 22313-1450
www.uspto.gov

AUG 0 4 2010

CARR & FERRELL LLP
2200 GENG ROAD
PALO ALTO CA 94303

In re Application of	:	
FLEISCHER, Daniel et al.	:	DECISION ON PETITION
Application No. 12610134	:	TO MAKE SPECIAL UNDER
Filed: October 30, 2009	:	THE GREEN TECHNOLOGY
Attorney Docket No. PA4923US	:	PILOT PROGRAM

This is a decision on the petition under 37 CFR 1.102, filed July 1, 2010, to make the above-identified application special under the pilot program for applications pertaining to Green Technologies as set forth 74 Federal Register Notice 64666 (December 8, 2009).

The petition is **GRANTED**.

A grantable petition to make an application special under 37 CFR 1.102 and the pilot program as set forth in 74 FR 64666 must be directed to a nonprovisional application filed under 35 USC 111(a) or be a national stage entry under 35 USC 371, exclusive of any reissue applications and be filed prior to the date of the notice, December 8, 2009.

In order to qualify for special status, the following requirements must be met. 1) The application must have no more than 3 independent claims and no more than 20 total claims. 2) The application must not contain any multiple dependent claims. 3) The petition must state the basis for seeking special status, i.e., the claimed invention either: A) materially enhances the quality of the environment or B) materially contributes to: i) the discovery or development of renewable energy resources, ii) the more efficient utilization and conservation of energy resources, or iii) greenhouse gas emission reduction. 4) If the disclosure is not clear on its face that the claimed invention materially contributes under category (A) or (B), the petition must be accompanied by a statement by the applicant, assignee, or an attorney/agent registered to practice before the Office explaining how the materiality standard is met. 5) A statement that applicant will agree to make an election without traverse in a telephonic interview if a restriction requirement is made by the examiner. 6) The petition to make special must be filed electronically. 7) The petition must be filed at least one day prior to the date that a first Office Action appears in the Patent Application Information Retrieval (PAIR) system. 8) The petition must be accompanied by a request for early publication in compliance with 37 CFR 1.219 and include the publication fee as set forth in 37 CFR 1.18(d).

The requirement for a fee for consideration of the petition to make special for applications pertaining to Green Technologies has been waived.

The instant petition complies with items 1 – 8 above. Accordingly, the above-identified application has been accorded "special" status.

Telephone inquires concerning this decision should be directed to Manjunath Rao at 571-272-0939.

The application is being forwarded to the Technology Center Art Unit 1621 for action on the merits commensurate with this decision.

/Manjunath Rao/

Manjunath Rao
Supervisory Patent Examiner
Technology Center 1600

UNITED STATES PATENT AND TRADEMARK OFFICE

Commissioner for Patents
United States Patent and Trademark Office
P.O. Box 1450
Alexandria, VA 22313-1450
www.uspto.gov

MINTZ, LEVIN, COHN, FERRIS,
GLOVSKY AND POPEO, P.C.
ONE FINANCIAL CENTER
BOSTON MA 02111

MAILED

MAY 02 2011

OFFICE OF PETITIONS

In re Application of	:	
MYRICK, et al	:	
Application No. 12/610,147	:	DECISION ON PETITION
Filed: October 30, 2009	:	TO WITHDRAW
Attorney Docket No. 38462-501001US	:	FROM RECORD
	:	

This is a decision on the Request to Withdraw as attorney or agent of record under 37 C.F.R. § 1.36(b), filed March 4, 2011.

The request is **NOT APPROVED.**

The request to withdraw from record cannot be approved because the correspondence address for future communications from the Office cannot be accepted. In this regard, the Office will either change the correspondence address of record to the most current address information provided for the assignee of the entire interest who properly became of record under 37 CFR 3.71 or, if no assignee of the entire interest has properly been made of record under 37 CFR 3.71, the most current address information provided for the first named inventor. Accordingly, the change of address is neither the assignee of the entire interest who properly became of record or the first named inventor.

All future communications from the Office will continue to be directed to the above-identified address until otherwise properly notified.

Telephone inquiries concerning this decision should be directed to the undersigned at (571) 272-6735.

/Diane C. Goodwyn/
Diane C. Goodwyn
Petitions Examiner
Office of Petitions

cc: JAKE MYRICK
101 EWING TERRACE
SAN FRANCISCO, CA 94118

UNITED STATES PATENT AND TRADEMARK OFFICE

Commissioner for Patents
United States Patent and Trademark Office
P.O. Box 1450
Alexandria, VA 22313-1450
www.uspto.gov

MAILED
FEB 21 2012
OFFICE OF PETITIONS

MINTZ, LEVIN, COHN, FERRIS,
GLOVSKY AND POPEO, P.C.
ONE FINANCIAL CENTER
BOSTON MA 02111

In re Application of	:	
MYRICK, et al	:	
Application No. 12/610,147	:	DECISION ON PETITION
Filed: October 30, 2009	:	TO WITHDRAW
Attorney Docket No. 38462-501001US	:	FROM RECORD
	:	

This is a decision on the Request to Withdraw as attorney or agent of record under 37 C.F.R. § 1.36(b), filed January 30, 2012 and February 9, 2012.

The request is **NOT APPROVED.**

The request to withdraw from record cannot be approved because the correspondence address for future communications from the Office cannot be accepted. In this regard, the Office will either change the correspondence address of record to the most current address information provided for the assignee of the entire interest who properly became of record under 37 CFR 3.71 or, if no assignee of the entire interest has properly been made of record under 37 CFR 3.71, the most current address information provided for the first named inventor. Accordingly, the change of address is neither the assignee of the entire interest who properly became of record or the first named inventor.

All future communications from the Office will continue to be directed to the above-identified address until otherwise properly notified.

Telephone inquiries concerning this decision should be directed to the undersigned at (571) 272- 6735.

/Diane Goodwyn/
Diane Goodwyn
Petitions Examiner
Office of Petitions

cc: JAKE MYRICK
101 EWING TERRACE
SAN FRANCISCO, CA 94118

cc: JACK MYRICK
2018 CARQUINEZ AVENUE
EL CERRITO CA 94530

cc: PEDRO F. SUAREZ
3580 CARMEL MOUNTAIN ROAD
SUITE 300
SAN DIEGO CA 92130

UNITED STATES PATENT AND TRADEMARK OFFICE

UNITED STATES DEPARTMENT OF COMMERCE
United States Patent and Trademark Office
Address: COMMISSIONER FOR PATENTS
P.O. Box 1450
Alexandria, Virginia 22313-1450
www.uspto.gov

APPLICATION NO.	FILING DATE	FIRST NAMED INVENTOR	ATTORNEY DOCKET NO.	CONFIRMATION NO.
12/610,174	10/30/2009	Yasusuke IWASHITA	4639-102	9880

22429 7590 12/01/2010
LOWE HAUPTMAN HAM & BERNER, LLP
1700 DIAGONAL ROAD
SUITE 300
ALEXANDRIA, VA 22314

EXAMINER
BENSON, WALTER

ART UNIT	PAPER NUMBER
2837	

MAIL DATE	DELIVERY MODE
12/01/2010	PAPER

Please find below and/or attached an Office communication concerning this application or proceeding.

The time period for reply, if any, is set in the attached communication.

UNITED STATES PATENT AND TRADEMARK OFFICE

Commissioner for Patents
United States Patent and Trademark Office
P.O. Box 1450
Alexandria, VA 22313-1450
www.uspto.gov

LOWE HAUPTMAN HAM & BERNER, LLP
1700 DIAGONAL ROAD
SUITE 300
ALEXANDRIA VA 22314

In re Application of	
IWASHITA et al.	**: DECISION ON REQUEST TO**
Application No.: 12/610,174	**: PARTICIPATE IN THE PATENT**
Filed: 30 October 2009	**: PROSECUTION HIGHWAY**
Attorney Docket No.: 4639-102	**: PROGRAM AND PETITION**
For: CONTROL DEVICE FOR SERVO	**: TO MAKE SPECIAL UNDER**
DIE CUSHION	**: 37 CFR 1.102(a)**

This is a decision on the request to participate in the Patent Prosecution Highway (PPH) program and the petition under 37 CFR 1.102(a), filed 16 November 2010, to make the above-identified application special.

The request and petition are **GRANTED**.

Discussion

A grantable request to participate in the PPH pilot program and petition to make special require:

1. The U.S. application is

    a. a Paris Convention application which either
        i. validly claims priority under 35 U.S.C. 119(a) and 37 CFR 1.55 to one or more applications filed in the JPO, or
        ii. validly claims priority to a PCT application that contains no priority claims, or
    b. a national stage application under the PCT (an application which entered the national stage in the U.S. from a PCT international application after compliance with 35 U.S.C. 371), which PCT application
        i. validly claims priority to an application filed in the JPO, or
        ii. validly claims priority to a PCT application that contains no priority claims, or
        iii. contains no priority claim, or
    c. a so-called bypass application filed under 35 U.S.C. 111(a) which validly claims benefit under 35 U.S.C. 120 to a PCT application, which PCT application
        i. validly claims priority to an application filed in the JPO, or
        ii. validly claims priority to a PCT application that contains no priority claims, or
        iii. contains no priority claim;

2. Applicant must submit a copy of:
    a. The allowable/patentable claim(s) from the JPO application(s);
    b. An English translation of the allowable/patentable claim(s) and
    c. A statement that the English translation is accurate;
3. Applicant must:
    a. Ensure all the claims in the U.S. application must sufficiently correspond or be amended to sufficiently correspond to the allowable/patentable claim(s) in the JPO application(s) and
    b. Submit a claims correspondence table in English;
4. Examination of the U.S. application has not begun;
5. Applicant must submit:
    a. Documentation of prior office action:
        i. a copy of the office action(s) just prior to the "Decision to Grant a Patent" from each of the JPO application(s) containing the allowable/patentable claim(s) or
        ii. if the allowable/patentable claims(s) are from a "Notification of Reasons for Refusal" then the Notification of Reasons for Refusal or
        iii. if the JPO application is a first action allowance then no office action from the JPO is necessary should be indicated on the request/petition form;
    b. An English language translation of the JPO Office action from (5)(a)(i)-(ii) above
    c. A statement that the English translation is accurate;
6. Applicant must submit:
    a. An IDS listing the documents cited by the JPO examiner in the JPO office action (unless already submitted in this application)
    b. Copies of the documents except U.S. patents or U.S. patent application publications (unless already submitted in this application);
7. The required petition fee under 37 CFR 1.17(h).

The request to participate in the PPH pilot program and petition comply with the above requirements. Accordingly, the above-identified application has been accorded "special" status.

Inquiries concerning this decision should be directed to Lee W. Young at 571-272-4549.

All other inquiries concerning the examination or status of the application is accessible in the PAIR system at http://www.uspto.gov/ebc.index.html.

This application will be forwarded to the examiner for action on the merits commensurate with this decision once this application's formality reviews have been completed.

Lee W. Young
TQAS, Technology Center 2800 – Semiconductors
Electrical & Optical Systems & Components

UNITED STATES PATENT AND TRADEMARK OFFICE

Commissioner for Patents
United States Patent and Trademark Office
P.O. Box 1450
Alexandria, VA 22313-1450
www.uspto.gov

NIXON PEABODY, LLP
401 9TH STREET, NW
SUITE 900
WASHINGTON, DC 20004-2128

MAILED

OCT 19 2011

OFFICE OF PETITIONS

In re Application of
Terry Bluck, et al.
Application No. 12/610,187
Filed: October 30, 2011
Attorney Docket No.: 048635-059000

DECISION ACCORDING STATUS
UNDER 37 CFR 1.47(a)

This is a decision in response to the renewed petition under 37 CFR 1.47(a) filed July 27, 2010. The delay in responding is regretted; however, the petition was recently referred to the Office of Petitions for consideration.

The petition is **GRANTED**.

Petitioner has shown that non-signing inventor, Michael S. Barnes, has refused to join in the filing of the above-identified application.

The application and papers have been reviewed and found in compliance with 37 CFR 1.47(a). This application is hereby accorded Rule 1.47(a) status.

As provided in 37 CFR 1.47(c), this Office will forward notice of this application's filing to the non-signing inventor at the address given in the petition. Notice of the filing of this application will also be published in the Official Gazette.

The application is being referred to the Office of Data Management to await a response to the Notice of Allowance mailed September 1, 2011.

Telephone inquiries related to this decision should be directed to the undersigned at (571) 272-3204. Telephone inquiries related to processing by the Office of Data Management should be directed to (571) 272-4200.

/SDB/

Sherry D. Brinkley
Petitions Examiner
Office of Petitions

UNITED STATES PATENT AND TRADEMARK OFFICE

Commissioner for Patents
United States Patent and Trademark Office
P.O. Box 1450
Alexandria, VA 22313-1450
www.uspto.gov

MAILED

OCT 19 2011

OFFICE OF PETITIONS

MR. MICHAEL S. BARNES
12215 SANTA TERESA DRIVE
SAN RAMON, CA 94583

In re Application of :
Terry Bluck, Michael S. Barnes and Kevin P. Fairbairn :
Application No. 12/610,187 :
Filed: October 30, 2010 :
For: EVAPORATIVE SYSTEM FOR SOLAR CELL :
FABRICATION :

LETTER

Dear Mr. Barnes:

You are named as a joint inventor in the above-identified United States patent application filed under the provisions of 35 U.S.C. 116 (United States Code) and 37 CFR 1.47(a), Rules of Practice in Patent Cases. Should a patent be granted on the application you will be designated therein as a joint inventor.

As a named inventor you are entitled to inspect any paper in the file wrapper of the application, order copies of all or any part thereof (at a prepaid cost per 37 CFR 1.19) or make your position of record in the application. Alternatively, you may arrange to do any of the preceding through a registered patent attorney or agent presenting written authorization from you. If you care to join the application, counsel of record (see below) would presumably assist you. Joining in the application would entail the filing of an appropriate oath or declaration by you pursuant to 37 CFR 1.63.

Telephone inquiries regarding this communication should be directed to the undersigned at (571) 272-3204. Requests for information regarding your application should be directed to the File Information Unit at (703) 308-2733. Information regarding how to pay for and order a copy of the application, or a specific paper in the application, should be directed to the Certification Division at (571) 272-3150 or 1 (800) 972-6382 (outside the Washington, DC area).

/SDB/

Sherry D. Brinkley
Petitions Examiner
Office of Petitions

cc: NIXON PEABODY, LLP
401 9TH STREET, NW
SUITE 900
WASHINGTON, DC 20004-2128

UNITED STATES PATENT AND TRADEMARK OFFICE

Commissioner for Patents
United States Patent and Trademark Office
P.O. Box 1450
Alexandria, VA 22313-1450
www.uspto.gov

FLASTER/GREENBERG P.C.
Four Penn Center
1600 John F. Kennedy Boulevard
2nd Floor
PHILADELPHIA PA 19103

MAILED
AUG 30 2011
OFFICE OF PETITIONS

In re Application of	:	
Levon Baghdassarian	:	
Application No. 12/610,260	:	ON PETITION
Filed: October 30, 2009	:	
Attorney Docket No. N0361-1US	:	

This is a decision on the petition under the unintentional provisions of 37 CFR 1.137(b), filed August 18, 2011, to revive the above-identified application.

The petition is **DISMISSED**.

Any request for reconsideration of this decision must be submitted within TWO (2) MONTHS from the mail date of this decision. Extensions of time under 37 CFR 1.136(a) are permitted. The reconsideration request should include a cover letter entitled "Renewed Petition under 37 CFR 1.137(b)." This is **not** a final agency action within the meaning of 5 U.S.C. § 704.

The application became abandoned for failure to reply in a timely manner to the non-final Office action mailed, February 17, 2011, which set a shortened statutory period for reply of three (3) months. No extensions of time under the provisions of 37 CFR 1.136(a) were obtained. Accordingly, the application became abandoned on May 18, 2011.

A grantable petition under 37 CFR 1.137(b) must be accompanied by: (1) the required reply, unless previously filed; (2) the petition fee as set forth in 37 CFR 1.17(m); (3) a statement that the entire delay in filing the required reply from the due date for the reply until the filing of a grantable petition pursuant to 37 CFR 1.137(b) was unintentional; and (4) any terminal disclaimer (and fee as set forth in 37 CFR 1.20(d)) required by 37 CFR 1.137(d). Where there is a question as to whether either the abandonment or the delay in filing a petition under 37 CFR 1.137 was unintentional, the Director may require additional information. See MPEP 711.03(c)(II)(C) and (D). The instant petition lacks item(s) (1).

There was no reply to the Office action of February 17, 2011 filed herewith petition.

Further correspondence with respect to this matter should be addressed as follows:

By Mail: Mail Stop PETITION
Commissioner for Patents
P. O. Box 1450
Alexandria, VA 22313-1450

By hand: U. S. Patent and Trademark Office
Customer Service Window, Mail Stop Petitions
Randolph Building
401 Dulany Street
Alexandria, VA 22314

The centralized facsimile number is **(571) 273-8300.**

Telephone inquiries concerning this decision should be directed to the undersigned at (571) 272-2991.

/Terri Johnson/
Terri Johnson
Petitions Examiner
Office of Petitions

UNITED STATES PATENT AND TRADEMARK OFFICE

Commissioner for Patents
United States Patent and Trademark Office
P.O. Box 1450
Alexandria, VA 22313-1450
www.uspto.gov

FLASTER/GREENBERG P.C.
Four Penn Center
1600 John F. Kennedy Boulevard
2nd Floor
PHILADELPHIA PA 19103

MAILED
SEP 27 2011
OFFICE OF PETITIONS

In re Application of	:	
Levon Baghidassarian	:	
Application No. 12/610,260	:	ON PETITION
Filed: October 30, 2009	:	
Attorney Docket No. N0361-1US	:	

This is a decision on the petition under 37 CFR 1.137(b), filed August 18, 2011, to revive the above-identified application.

The petition is **GRANTED**.

The petition satisfies the requirements of 37 CFR 1.137(b) in that petitioner has supplied (1) the reply in the form of a continuing application under 37 CFR 1.53(b); (2) the petition fee of $810; and (3) an adequate statement of unintentional delay.

This application is being revived solely for purposes of continuity. As continuity has been established by this decision, the application is again abandoned in favor of continuing application No. 13/212,961.

Telephone inquiries concerning this decision should be directed to Terri Johnson at (571) 272-2991.

The application file is being referred to Technology Center AU 3627.

/Terri Johnson/
Terri Johnson
Petitions Examiner
Office of Petitions

UNITED STATES PATENT AND TRADEMARK OFFICE

Commissioner for Patents
United States Patent and Trademark Office
P.O. Box 1450
Alexandria, VA 22313-1450
www.uspto.gov

MAILED

SEP 14 2010

OFFICE OF PETITIONS

RAJ ABHYANKER, P.C.
1580 W. EL CAMINO REAL, SUITE 8
MOUNTAIN VIEW, CA 94040

In re Application of	:	
Pankaj KUMAR et al	:	
Application No. 12/610,277	:	DECISION ON PETITION
Filed: October 31, 2009	:	
Attorney Docket No. 09-0297US1	:	

This is a decision on the petition under 37 CFR 1.59(b), filed February 21, 2010, to expunge information from the above identified application.

The petition is **DISMISSED**.

Petitioner requests that a document entitled "Interfacing Between Differing Voltage Level Requirements In An Integrated Circuit System", filed February 21, 2010, along with all papers submitted as an application, be expunged from the record. Petitioner request that newly presented application papers dated February 10, 2010 be substituted since the duplicate applications were filed on the same day, and thus such errors in filing were unintentional and were merely paralegal error.

Any preliminary amendment that is present on the filing date of an application is considered to be part of the original disclosure. The original application was filed October 31, 2009. The preliminary amendment was filed February 21, 2010, and hence cannot be considered to be a part of the original disclosure that would be entitled to the original filing date. Since the subsequently filed papers dated February 10, 2010 have no support from the originally filed application dated October 31, 2009, it will not be substituted, and the application papers filed October 31, 2009 will not be expunged. The papers filed October 31, 2009 will be considered to be the application data for application number 12/610,277. The documents submitted as an application on February would only be proper in a newly filed distinct application.

Telephone inquiries concerning this communication should be directed to the undersigned at 571-272-0602.

Thurman K. Page
Petitions Examiner
Office of Petitions

UNITED STATES PATENT AND TRADEMARK OFFICE

Commissioner for Patents
United States Patent and Trademark Office
P.O. Box 1450
Alexandria, VA 22313-1450
www.uspto.gov

VISTA IP LAW GROUP LLP
2040 MAIN STREET, SUITE 710
IRVINE, CA 92614

MAILED
AUG 26 2011
OFFICE OF PETITIONS

In re Application of :
Gail Lebovic, et al. :
Application No.: 12/610,303 : ON PETITION
Filed: October 31, 2009 :
Attorney Docket No.: BLU-008 :

This is a decision on the petition, filed August 25, 2011, under 37 CFR 1.313(c)(2) to withdraw the above-identified application from issue after payment of the issue fee.

The petition is **GRANTED**.

The above-identified application is withdrawn from issue for consideration of a submission under 37 CFR 1.114 (request for continued examination). See 37 CFR 1.313(c)(2).

Petitioner is advised that the issue fee paid on July 18, 2011, cannot be refunded. If, however, this application is again allowed, petitioner may request that it be applied towards the issue fee required by the new Notice of Allowance.[1]

Telephone inquiries relating to this decision should be directed to the undersigned at (571) 272-3204.

The application is being referred to Technology Center AU 2882 for further processing of the request for continued examination under 37 CFR 1.114 and for consideration of the concurrently filed Information Disclosure Statement (IDS).

/SDB/

Sherry D. Brinkley
Petitions Examiner
Office of Petitions

[1] *The request to apply the issue fee to the new Notice may be satisfied by completing and returning the new Part B – Fee(s) Transmittal Form (along with any balance due at the time of submission). Petitioner is advised that the Issue Fee Transmittal Form* ***must*** *be completed and timely submitted to avoid abandonment of the application.*

UNITED STATES PATENT AND TRADEMARK OFFICE

Commissioner for Patents
United States Patent and Trademark Office
P.O. Box 1450
Alexandria, VA 22313-1450
www.uspto.gov

KRZYSZTOF KOTAPKA
41 HILLSIDE DRIVE
BLOOMINGDALE, NJ 07403

MAILED
OCT 26 2010
OFFICE OF PETITIONS

In re Application of	:	
Leonard Jutkiewicz	:	
Application No. 12/610,329	:	DECISION ON PETITION
Filed: November 1, 2009	:	
Attorney Docket No.: None	:	

This is a decision on the petition, filed August 26, 2010, to revive the above-identified application under the unavoidable provisions of 37 CFR 1.137(a).

The petition is **DISMISSED.**

Any further petition to revive must be submitted within TWO (2) MONTHS from the mail date of this decision. Extensions of time under 37 CFR 1.136(a) are permitted. The reconsideration request should include a cover letter entitled "Renewed Petition under 37 CFR 1.137(a)." This is **not** a final agency action within the meaning of 5 U.S.C.§ 704.

The application became abandoned for failure to reply in a timely manner to the Notice to File Missing Parts of Nonprovisional Application (Notice), mailed November 16, 2009. The Notice set a period for reply of two (2) months from the mail date of the Notice. No extension of time under the provisions of 37 CFR 1.136(a) was obtained. Accordingly, the application became abandoned on January 17, 2010. A Notice of Abandonment was mailed on July 26, 2010. In response, on August 26, the present petition was filed.

A grantable petition under 37 CFR 1.137(a) must be accompanied by: (1) the required reply, unless previously filed; (2) the petition fee as set forth in 37 CFR 1.17(l); (3) a showing to the satisfaction of the Director that the entire delay in filing the required reply from the due date for the reply until the filing of a grantable petition pursuant to 37 CFR 1.137(a) was unavoidable; and (4) any terminal disclaimer (and fee as set forth in 37 CFR 1.20(d)) required pursuant to 37 CFR 1.137(d). The instant petition lacks item (3).

With this petition, petitioner has submitted, *inter alia*, a proposed reply in the form of an executed declaration and surcharge, the petition fee of $270 and a statement of facts. Petitioner has met requirements (1) and (2) of Rule 1.137(a). The fourth requirement is not applicable, as a terminal

disclaimer is not required. Regarding the third requirement of Rule 1.137(a), the record does not support a finding that the entire period of delay was unavoidable. In fact, petitioner provides no showing that the delay was unavoidable within the meaning of 35 U.S.C. § 151 and 37 CFR 1.137(a). Petitioner simply states "We have not received any letters from PTO..."

A review of the written record indicates no irregularity in the mailing of the Notice on November 16, 2009. Therefore, in the absence of any irregularity, there is a strong presumption that the Notice was properly mailed to and received by applicant at the address of record.

If petitioner cannot provide the evidence necessary to establish unavoidable delay, or simply does not wish to, petitioner may wish to consider filing a petition stating that the delay was unintentional instead of filing a renewed petition under 37 CFR 1.137(a).

Public Law 97-247, § 3, 96 Stat. 317 (1982), which revised patent and trademark fees, amended 35 U.S.C. § 41(a)(7) to provide for the revival of an "unintentionally" abandoned application without a showing that the delay in prosecution or in late payment of the issue fee was "unavoidable." This amendment to 35 U.S.C. § 41(a)(7) has been implemented in 37 CFR 1.137(b). An "unintentional" petition under 37 CFR 1.137(b) must be accompanied by the $1,620 petition fee. If applicant qualifies as a "small entity" and does so prior to or together with the payment of the fee, the fee will be one-half of the amount indicated. See 37 CFR 1.27.

The filing of a petition under 37 CFR 1.137(b) cannot be intentionally delayed and therefore must be filed promptly. A person seeking revival due to unintentional delay cannot make a statement that the delay was unintentional unless the entire delay, including the date it was discovered that the application was abandoned until the filing of the petition to revive under 37 CFR 1.137(b), was unintentional. A statement that the delay was unintentional is not appropriate if petitioner intentionally delayed the filing of a petition for revival under 37 CFR 1.137(b).

Further correspondence with respect to this matter should be delivered through one of the following mediums:

By mail: Mail Stop PETITIONS
Commissioner for Patents
Post Office Box 1450
Alexandria, VA 22313-1450

By hand: Customer Service Window
Mail Stop Petitions
Randolph Building
401 Dulany Street
Alexandria, VA 22314

By fax: (571) 273-8300
ATTN: Office of Petitions

By internet: EFS-Web[1]

Any questions concerning this matter may be directed to the undersigned at (571) 272-3204.

Sherry D. Brinkley
Petitions Examiner
Office of Petitions

[1] www.uspto.gov/ebc/efs_help.html (for help using EFS-Web call the Patent Electronic Business Center at (866) 217-9197)

UNITED STATES PATENT AND TRADEMARK OFFICE

Commissioner for Patents
United States Patent and Trademark Office
P.O. Box 1450
Alexandria, VA 22313-1450
www.uspto.gov

KRZYSZTOF KOTAPKA
41 HILLSIDE DRIVE
BLOOMINGDALE, NJ 07403

MAILED
FEB 03 2011
OFFICE OF PETITIONS

In re Application of	:	
Leonard Jutkiewicz	:	
Application No. 12/610,329	:	DECISION ON PETITION
Filed: November 1, 2009	:	
Attorney Docket No.: None	:	

This is a decision on the renewed petition under the unavoidable provisions of 37 CFR 1.137(a), filed November 19, 2010, to revive the above-identified application.

This application became abandoned on January 17, 2010 for a failure to reply in a timely manner to the Notice to File Missing Parts of Nonprovisional Application (Notice), mailed November 16, 2009. A Notice of Abandonment was subsequently mailed on July 26, 2010. . On August 26, 2010, a petition under 37 CFR 1.137(a) was filed; however, the petition was dismissed in a decision mailed October 26, 2010. On November 19, 2010, the present petition was filed wherein petitioner again argues that a response would have been filed had the Notice been received.

Petitioner's argument has been considered, but the result in the same. The showing of record is not sufficient to establish to the satisfaction of the Director that there was an unavoidable delay within the meaning of 35 U.S.C. § 133 and 37 CFR 1.137(a).

Since petitioner has not carried the burden of proof to establish to the satisfaction of the Director that the delay was unavoidable, the petition must be **DISMISSED**.

ALTERNATIVE VENUE

While this is not a final agency action within the meaning of 5 U.S.C.§ 704, petitioner is strongly encourage to consider filing a petition stating that the delay was unintentional under the provisions of 37 CFR 1.137(b). An "unintentional" petition under 37 CFR 1.137(b) must be accompanied by the $810 petition fee and the required reply, unless previously filed.

The filing of a petition under 37 CFR 1.137(b) cannot be intentionally delayed and therefore must be filed promptly. A person seeking revival due to unintentional delay cannot make a statement that the

delay was unintentional unless the entire delay, including the date it was discovered that the application was abandoned until the filing of the petition to revive under 37 CFR 1.137(b), was unintentional. A statement that the delay was unintentional is not appropriate if petitioner intentionally delayed the filing of a petition for revival under 37 CFR 1.137(b).

Further correspondence with respect to this matter must be submitted within TWO (2) MONTHS from the mail date of this decision and should be addressed as follows:

By mail: Mail Stop PETITIONS
Commissioner for Patents
Post Office Box 1450
Alexandria, VA 22313-1450

By hand: Customer Service Window
Mail Stop Petitions
Randolph Building
401 Dulany Street
Alexandria, VA 22314

By fax: (571) 273-8300
ATTN: Office of Petitions

By internet: EFS-Web[1]

Any questions concerning this matter may be directed to the undersigned at (571) 272-3204.

Sherry D. Brinkley
Petitions Examiner
Office of Petitions

[1] www.uspto.gov/ebc/efs_help.html (for help using EFS-Web call the Patent Electronic Business Center at (866) 217-9197)

UNITED STATES PATENT AND TRADEMARK OFFICE

Commissioner for Patents
United States Patent and Trademark Office
P.O. Box 1450
Alexandria, VA 22313-1450
www.uspto.gov

KRZYSZTOF KOTAPKA
41 HILLSIDE DRIVE
BLOOMINGDALE, NJ 07403

MAILED
MAR 28 2011
OFFICE OF PETITIONS

In re Application of :
Leonard Jutkiewicz :
Application No. 12/610,329 : ON PETITION
Filed: December 23, 2009 :
Attorney Docket No.: HJP920080059US1 :

This is a decision on the petition under 37 CFR 1.137(b), filed February 15, 2011, to revive the above-identified application.

The petition is **DISMISSED**.

Any request for reconsideration of this decision must be submitted within TWO (2) MONTHS from the mail date of this decision. Extensions of time under 37 CFR 1.136(a) are permitted. The reconsideration request should include a cover letter entitled "Renewed Petition under 37 CFR 1.137(b)." This is **not** a final agency action within the meaning of 5 U.S.C. § 704 and no further petition fee is required.

A review of the record discloses that this application was filed on November 1, 2009, naming Leonard Jutkiewicz and Krzysztof Kotapka as joint inventors. On November 16, 2009 a Notice to File Missing Parts (Notice) was mailed, requiring, within two months, an oath or declaration under 37 CFR 1.63 and the requisite surcharge under 37 CFR 1.16(f). Since no timely reply was filed, the application became abandoned on January 17, 2010. A Notice of Abandonment was subsequently mailed on July 26, 2010. A petition under the provisions of 37 CFR 1.137(a) was filed on August 26, 2010 and renewed on November 19, 201; however the petitions were dismissed in decisions mailed October 26, 2010 and February 3, 2011, respectively. On February 15, 2011, the present petition was filed.

A grantable petition under 37 CFR 1.137(b) must be accompanied by: (1) the required reply, unless previously filed; (2) the petition fee as set forth in 37 CFR 1.17(m); (3) a statement that the entire delay in filing the required reply from the due date for the reply until the filing of a grantable petition pursuant to 37 CFR 1.137(b) was unintentional; and (4) any terminal disclaimer (and fee as set forth in 37 CFR 1.20(d)) required by 37 CFR 1.137(d). Where there is a question as to whether either the abandonment or the delay in filing a petition under 37 CFR 1.137 was unintentional, the Director may require additional information. See MPEP 711.03(c)(II)(C) and (D).

The petition lacks item (1), the required reply. It is noted that an executed declaration and surcharge were submitted on August 26, 2010. However, upon further review of the declaration it appears that the reply is incomplete since the signature of joint inventor Leonard Jutkiewicz is missing from the declaration of August 26, 2010. If Mr. Jutkiewicz is **not** a joint inventor, please state such on reconsideration. If Mr. Jutkiewicz is, in fact, a joint inventor then he must submit an executed a declaration under 37 CFR 1.63 as required by the Notice of November 16, 2009.

Further correspondence with respect to this matter should be delivered through one of the following mediums:

By mail: Mail Stop PETITIONS
Commissioner for Patents
Post Office Box 1450
Alexandria, VA 22313-1450

By hand: Customer Service Window
Mail Stop Petitions
Randolph Building
401 Dulany Street
Alexandria, VA 22314

By fax: (571) 273-8300
ATTN: Office of Petitions

By Internet: EFS-Web[1]

Any questions concerning this matter may be directed to the undersigned at (571) 272-3204.

/SDB/

Sherry D. Brinkley
Petitions Examiner
Office of Petitions

---

1 www.uspto.gov/ebc/efs_help.html (for help using EFS-Web call the Patent Electronic Business Center at (866) 217-9197)

UNITED STATES PATENT AND TRADEMARK OFFICE

Commissioner for Patents
United States Patent and Trademark Office
P.O. Box 1450
Alexandria, VA 22313-1450
www.uspto.gov

KRZYSZTOF KOTAPKA
41 HILLSIDE DRIVE
BLOOMINGDALE, NJ 07403

MAILED

JUN 13 2011

OFFICE OF PETITIONS

In re Application of :
Leonard Jutkiewicz, et al. :
Application No. 12/610,329 : ON PETITION
Filed: November 1, 2009 :
Attorney Docket No.: None :

This is a decision on the renewed petition under 37 CFR 1.137(b), filed April 14, 2011, to revive the above-identified application.

The petition is **GRANTED**.

The application became abandoned for failure to timely respond to a Notice to File Missing Parts (Notice) mailed November 16, 2009. The notice required an oath or declaration under 37 CFR 1.63 and the requisite surcharge under 37 CFR 1.16(f). No extension of time under the provisions of 37 CFR 1.136(a) was obtained. Accordingly, the application became abandoned January 17, 2010. A Notice of Abandonment was mailed on July 26, 2010. On February 25, 2011, a petition under the provisions of 37 CFR 1.137(b) was filed; however, the petition was dismissed in a decision mailed March 28, 2011. In response on April 14, 2011 the present petition was filed.

Petitioner argues that the declaration of August 26, 2010 was proper, in that the declaration is signed by joint inventors Leonard Jutkiewicz and Krzysztof Kotaka. Petitioners request, in effect, that the application be processed using the declaration filed August 26, 2010.

A further review of the declaration confirms petitioner is correct. Accordingly, the petition is found to comply with the requirements of 37 CFR 1.137(b) in that petitioner has supplied (1) the reply in the form of an executed declaration and the $65 surcharge; (2) the petition fee of $810; and (3) an adequate statement of unintentional delay.

The application is being referred to the Office of Patent Application Processing (OPAP) for further processing using the declaration filed August 26, 2010.

Telephone inquires related to this decision should be directed to the undersigned at (571) 272-3204. Telephone inquiries related to processing at OPAP should be directed to their hotline at (571) 272-4000.

/SDB/

Sherry D. Brinkley
Petitions Examiner
Office of Petitions

UNITED STATES PATENT AND TRADEMARK OFFICE

Commissioner for Patents
United States Patent and Trademark Office
P.O. Box 1450
Alexandria, VA 22313-1450
www.uspto.gov

Troutman Sanders, LLP
5200 Bank Of America Plaza
600 Peachtree Street, N.E.
Suite 5200
Atlanta, GA 30308-2216

MAILED
SEP 21 2010
OFFICE OF PETITIONS

In re Application of :
David Llewellyn, et. al. :
Application No. 12/610,332 : ON PETITION
Filed: November 1, 2009 :
Attorney Docket No. MIZ102CIP :

This is a decision on the petition under 37 CFR 1.137(b), filed July 30, 2010, to revive the above-identified application.

The application became abandoned for failure to file a reply to the Notice to File Missing Parts of Nonprovisional Application mailed on November 18, 2009. A Notice of Abandonment was mailed July 27, 2010.

It is not apparent whether the statement of unintentional delay was signed by a person who would have been in a position of knowing that the entire delay in filing the required reply from the due date for the reply until the filing of a grantable petition pursuant to 37 CFR 1.137(b) was unintentional. Nevertheless, in accordance with 37 CFR 10.18, the statement is accepted as constituting a certification of unintentional delay. However, in the event that petitioner has no knowledge that the delay was unintentional, petitioner must make such an inquiry to ascertain that, in fact, the delay was unintentional. If petitioner discovers that the delay was intentional, petitioner must so notify the Office.

The petition satisfies the requirements of 37 CFR 1.137(b) in that petitioner has supplied (1) the reply in the form of $540 for the search fee, $220 for the examination fee, $330 for the basic filing fee, $130 for the surcharge; (2) the petition fee of $1,620 and (3) a proper statement of unintentional delay. Therefore, the petition is **GRANTED**.

An extension of time under 37 CFR 1.136 must be filed prior to the expiration of the maximum extendable period for reply. See In re Application of S., 8 USPQ2d 1630, 1631 (Comm'r. Pats. 1988). Accordingly, since the $2,350 extension of time was subsequent to the maximum extendable period for reply, this fee is unnecessary and petitioner may request a refund of this fee by writing to the following address: Mail Stop 16, Commissioner for

Patents, P. O. Box 1450, Alexandria, VA 22313-1450. A copy of this decision should accompany petitioner's request.

This application file is being referred to the Office of Patent Application Processing for further processing in accordance with this decision.

Telephone inquiries concerning this decision should be directed to the undersigned at (571) 272-3226.

Andrea Smith
Petitions Examiner
Office of Petitions

UNITED STATES PATENT AND TRADEMARK OFFICE

Commissioner for Patents
United States Patent and Trademark Office
P.O. Box 1450
Alexandria, VA 22313-1450
www.uspto.gov

RENNER OTTO BOISSELLE & SKLAR, LLP
1621 EUCLID AVENUE
NINETEENTH FLOOR
CLEVELAND OH 44115

MAILED
OCT 06 2010
OFFICE OF PETITIONS

In re Application:	:	
Douglas A. Mattice	:	
Application No. 12/610,416	:	ON PETITION
Filed: November 2, 2009	:	
Attorney Docket No. JASO.P0567USA	:	

This is a notice regarding your request for acceptance of a fee deficiency submission under 37 CFR 1.28. On September 1, 1998, the Court of Appeals for the Federal Circuit held that 37 CFR 1.28(c) is the sole provision governing the time for correction of the erroneous payment of the issue fee as a small entity. **See DH Technology v. Synergystex International, Inc. 154 F.3d 1333, 47 USPQ2d 1865 (Fed. Cir. Sept. 1, 1998).**

The Office no longer investigates or rejects original or reissue applications under 37 CFR 1.56. **1098 Off. Gaz. Pat. Office 502 (January 3, 1989).** Therefore, nothing in this Notice is intended to imply that an investigation was done.

Your fee deficiency submission under 37 CFR 1.28 is hereby **ACCEPTED**.

It appears petitioner has submitted an unnecessary duplicate payment of $738.00 on August 2, 2010. This amount will be refunded to petitioner's deposit account in due course.

This application is no longer entitled to small entity status. Accordingly, all future fees paid in this application must be paid at the large entity rate.

Telephone inquires concerning this decision should be directed to the undersigned at (571) 272-7751.

Joan Olszewski

Joan Olszewski
Petitions Examiner
Office of Petitions

UNITED STATES PATENT AND TRADEMARK OFFICE

Commissioner for Patents
United States Patent and Trademark Office
P.O. Box 1450

MAILED
NOV 29 2011
OFFICE OF PETITIONS

PATENTRY
P.O. BOX 151616
SAN RAFAEL CA 94915-1616

In re Application of	:	
Zachary S. LEVOW et al.	:	ON PETITION
Application No. 12/610,505	:	
Filed: November 2, 2009	:	
Atty. Docket No.: Z-PTNTR200912		

This is a decision on the petition under 37 CFR 1.137(b), filed November 10, 2011, to revive the above-identified application.

The petition is **GRANTED**.

The application became abandoned for failure to reply in a timely manner to the non-final Office action mailed April 1, 2011 (Office action), which set a shortened statutory period for reply of three (3) months. No extension of time under the provisions of 37 CFR 1.136(a) was obtained. The application became abandoned July 2, 2011. A Notice of Abandonment was mailed October 11, 2011.

The petition satisfies the conditions for revival pursuant to 37 CFR 1.137(b) by including (1) a reply in the form of a Response to the Office action mailed April 1, 2011, (2) a petition fee of $1860, and (3) a statement of unintentional delay. The reply to the Office action is accepted as having been unintentionally delayed.

Telephone inquiries relating to this decision should be directed to Robert DeWitty, Petitions Attorney, Office of Petitions (571-272-8427).

The application will be referred to Technology Center Art Unit 2448 for consideration of the filed Response.

Robert DeWitty
Petitions Attorney
Office of Petitions

SPE RESPONSE FOR CERTIFICATE OF CORRECTION

Paper No.:20111011

DATE : August 22, 2011

TO SPE OF : ART UNIT 1783

SUBJECT : Request for Certificate of Correction on Patent No.: RE42475

A response is requested with respect to the accompanying request for a certificate of correction.

Please complete this form and return with file, within **7** days to:
Certificates of Correction Branch - ST (South Tower) 9A22
Palm location **7590** - Tel. No. (703) 305-8309

With respect to the change(s) requested, correcting Office and/or Applicant's errors, should the patent read as shown in the certificate of correction? No new matter should be introduced, nor should the scope or meaning of the claims be changed.

Thank You For Your Assistance **Certificates of Correction Branch**

The request for issuing the above-identified correction(s) is hereby:

Note your decision on the appropriated box.

☐ **Approved** All changes apply.

☒ **Approved in Part** Specify below which changes **do not** apply.

☐ **Denied** State the reasons for denial below.

Comments:

Please do not make the changes to column 35, lines 45 or 55. These changes affect the scope of the claims and are more than a mistake of minor character.

/DAVID SAMPLE/
Supervisory Patent Examiner.Art Unit 1783

UNITED STATES DEPARTMENT OF COMMERCE
Patent and Trademark Office
ASSISTANT SECRETARY OF COMMERCE AND
COMMISSIONER OF PATENTS AND TRADEMARKS
P.O. BOX 1450
Alexandria, Va 22313- 1450
www.uspto.gov.

12/610534

DATE: October 21, 2011
Patent No: RE 42475
Applicant: Armela et al
Issued: 06/21/11

Request for consideration of Certificate of Correction:

Consideration has been given for your request for the certificate of correction for the above-identified patent under the provisions of Rules 1.322/1.323.

Respecting the alleged errors in column(s) 35 lines 45 and 55 are printed in accordance with the record. The examiner states these changes affect the scope of the claims and are more than a mistake of minor character. Therefore, no correction(s) are in order here under United States Codes (U.S.C.) 254 Code of Federal Regulation (C.F.R.) 1.322/1.323.

In view of the foregoing, in this matter your request is hereby denied.

RoChaun Johnson for
Mary Diggs, Supervisor
Decisions and Certificates of Correction
(571) 272-0470

JAMES W. BABINEAU
FISH & RICHARDSON P.C.
MINNEAPOLIS, MINNESOTA 55440-1022

UNITED STATES DEPARTMENT OF COMMERCE
Patent and Trademark Office
ASSISTANT SECRETARY OF COMMERCE AND
COMMISSIONER OF PATENTS AND TRADEMARKS
P.O. BOX 1450
Alexandria, Va 22313- 1450
www.uspto.gov.

DATE: October 21, 2011
Patent No: RE 42475
Applicant: Armela et al
Issued: 06/21/11

Request for consideration of Certificate of Correction:

Consideration has been given for your request for the certificate of correction for the above-identified patent under the provisions of Rules 1.322/1.323.

Respecting the alleged errors in column(s) 35 lines 45 and 55 are printed in accordance with the record. The examiner states these changes affect the scope of the claims and are more than a mistake of minor character. Therefore, no correction(s) are in order here under United States Codes (U.S.C.) 254 Code of Federal Regulation (C.F.R.) 1.322/1.323.

In view of the foregoing, in this matter your request is hereby denied.

RoChaun Johnson for
Mary Diggs, Supervisor
Decisions and Certificates of Correction
(571) 272-0470

JAMES W. BABINEAU
FISH & RICHARDSON P.C.
MINNEAPOLIS, MINNESOTA 55440-1022

UNITED STATES PATENT AND TRADEMARK OFFICE

Commissioner for Patents
United States Patent and Trademark Office
P.O. Box 1450
Alexandria, VA 22313-1450
www.uspto.gov

CHOATE, HALL & STEWART LLP
TWO INTERNATIONAL PLACE
BOSTON, MA 02110

MAILED

JAN 31 2011

OFFICE OF PETITIONS

In re Application of	:	
Jonathan H. LEBOWITZ, *et al.*	:	
Application No. 12/610,596	:	DECISION ON PETITION TO
Filed: November 2, 2009	:	WITHDRAW FROM RECORD
Attorney Docket No. **SYM-009CPC1(2008266-0111)**	:	

This is a decision on the Request to Withdraw as attorney or agent of record under 37 C.F.R. § 1.36(b), filed December 17, 2010.

The request is **NOT APPROVED**.

The request to withdraw as attorney/agent of record and change of correspondence address is hereby not accepted. Petitioner has not complied with current USPTO requirements, set forth in 37 CFR 10.40 concerning Request for Withdrawal as Attorney and Change of Correspondence Address.

Petitioner has not properly submitted forwarding correspondence address information for the application.

The Office will no longer change the correspondence address to that of a new practitioner unless the Request is accompanied by a power of attorney to a new practitioner (e.g., Form PTO/SB/82). All future communications from the Office will be directed to the above-listed address until otherwise properly notified by the applicant or a proper change of correspondence address has been submitted.

Inquires concerning either the examination or status of the application should be directed to the Technology Center.

Telephone inquiries concerning this decision should be directed to the undersigned at 571-272- 7253.

/Monica A. Graves/
Petitions Examiner, Office of Petitions

UNITED STATES PATENT AND TRADEMARK OFFICE

Commissioner for Patents
United States Patent and Trademark Office
P.O. Box 1450
Alexandria, VA 22313-1450
www.uspto.gov

MAILED

JAN 18 2011

OFFICE OF PETITIONS

FOLEY & LARDNER LLP
150 East Gilman Street
P.O. Box 1497
Madison, WI 53701-1497

In re Application of	:	
James Benjamin Hobbins	:	
Application No. 12/610,617	:	DECISION ON PETITION
Filed: November 2, 2009	:	TO WITHDRAW
Attorney Docket No. 070688-0109	:	FROM RECORD
	:	

This is a decision on the Request to Withdraw as attorney or agent of record under 37 C.F.R. § 1.36(b), filed December 16, 2010.

The request is **APPROVED**.

A grantable request to withdraw as attorney/agent of record must be signed by every attorney/agent seeking to withdraw or contain a clear indication that one attorney is signing on behalf of another/others. A request to withdraw will not be approved unless at least 30 (thirty) days would remain between the date of approval and the later of the expiration date of a time to file a response or the expiration date of the maximum time period which can be extended under 37 C.F.R. § 1.136(a).

The request was signed by Paul S. Hunter on behalf of all attorneys of record. All attorneys/agents have been withdrawn. Applicant is reminded that there is no attorney of record at this time.

All future correspondence will be directed to the first named inventor Ben Hobbins at the address indicated below.

There is an outstanding Office action mailed September 14, 2010 that requires a reply from the applicant.

Telephone inquiries concerning this decision should be directed to Terri Johnson at 571-272-2991.

/Terri Johnson/
Terri Johnson
Petitions Examiner
Office of Petitions

cc: **Ben Hobbins**
Lake Resources Group
1007 Eric Lane
Waunakee, WI 53597

UNITED STATES PATENT AND TRADEMARK OFFICE

UNITED STATES DEPARTMENT OF COMMERCE
United States Patent and Trademark Office
Address: COMMISSIONER FOR PATENTS
P.O. Box 1450
Alexandria, Virginia 22313-1450
www.uspto.gov

APPLICATION NUMBER	FILING OR 371(C) DATE	FIRST NAMED APPLICANT	ATTY. DOCKET NO./TITLE
12/610,617	11/02/2009	James Benjamin Hobbins	070688-0109

CONFIRMATION NO. 1806

POWER OF ATTORNEY NOTICE

23524
FOLEY & LARDNER LLP
150 EAST GILMAN STREET
P.O. BOX 1497
MADISON, WI 53701-1497

OC000000045481762

Date Mailed: 01/14/2011

NOTICE REGARDING CHANGE OF POWER OF ATTORNEY

This is in response to the Power of Attorney filed 12/16/2010.

- The withdrawal as attorney in this application has been accepted. Future correspondence will be mailed to the new address of record. 37 CFR 1.33.

/tsjohnson/

Office of Data Management, Application Assistance Unit (571) 272-4000, or (571) 272-4200, or 1-888-786-0101

UNITED STATES PATENT AND TRADEMARK OFFICE

Commissioner for Patents
United States Patent and Trademark Office
P.O. Box 1450
Alexandria, VA 22313-1450
www.uspto.gov

ROPES & GRAY LLP
PATENT DOCKETING 39/361
1211 AVENUE OF THE AMERICAS
NEW YORK NY 10036-8704

MAILED
MAR 29 2012
OFFICE OF PETITIONS

In re Application of	:	
Chad J. Kugler et al	:	
Application No. 12/610,633	:	DECISION GRANTING PETITION
Filed: November 2, 2009	:	UNDER 37 CFR 1.313(c)(2)
Attorney Docket No. 000787-0011-102	:	

This is a decision on the petition under 37 CFR 1.313(c)(2), filed, March 27, 2012 to withdraw the above-identified application from issue after payment of the issue fee.

The petition is **GRANTED**.

The above-identified application is withdrawn from issue for consideration of a submission under 37 CFR 1.114 (request for continued examination). *See* 37 CFR 1.313(c)(2).

Petitioner is advised that the issue fee paid on February 23, 2012 in the above-identified application cannot be refunded. If, however, the above-identified application is again allowed, petitioner may request that it be applied towards the issue fee required by the new Notice of Allowance.[1]

Telephone inquiries should be directed to Irvin Dingle at (571) 272-3210.

This matter is being referred to Technology Center AU 3774 for processing of the request for continued examination under 37 CFR 1.114 and for consideration of the concurrently filed Information Disclosure Statement.

/Irvin Dingle/
Irvin Dingle
Petitions Examiner
Office of Petitions

[1] The request to apply the issue fee to the new Notice may be satisfied by completing and returning the new Issue Fee Transmittal Form PTOL-85(b), which includes the following language thereon: Commissioner for Patents is requested to apply the Issue Fee and Publication Fee (if any) or re-apply any previously paid issue fee to the application identified above. Petitioner is advised that, whether a fee is indicated as being due or not, the Issue Fee Transmittal Form **must** be completed and timely submitted to avoid abandonment. Note the language in bold text on the first page of the Notice of Allowance and Fee(s) Due (PTOL-85).

UNITED STATES PATENT AND TRADEMARK OFFICE

Commissioner for Patents
United States Patent and Trademark Office
P.O. Box 1450
Alexandria, VA 22313-1450
www.uspto.gov

FISH & RICHARDSON P.C.
P.O. BOX 1022
MINNEAPOLIS, MN 55440-1022

MAILED

APR 07 2011

OFFICE OF PETITIONS

ON PETITION

In re Application of :
Zhi-Liang Chu et al :
Application No. 12/610,682 :
Filed: November 2, 2009 :
Attorney Docket No. COMBINATION THERAPY FOR THE TREATMENT OF DIABETES AND CONDITIONS RELATED THERETO AND FOR THE TREATMENT OF CONDITIONS AMELIORATED BY INCREASING A BLOOD GLP-1 LEVEL

This is a decision on the petition, filed April 5, 2011 under 37 CFR 1.313(c)(2) to withdraw the above-identified application from issue after payment of the issue fee.

The petition is **GRANTED**.

The above-identified application is withdrawn from issue for consideration of a submission under 37 CFR 1.114 (request for continued examination). See 37 CFR 1.313(c)(2).

Petitioner is advised that the issue fee paid on March 1, 2011 in the above-identified application cannot be refunded. If, however, the above-identified application is again allowed, petitioner may request that it be applied towards the issue fee required by the new Notice of Allowance.[1]

Telephone inquiries should be directed to Irvin Dingle at (571) 272-3210.

This matter is being referred to Technology Center AU 1654 for processing of the request for continued examination under 37 CFR 1.114 and for consideration of the concurrently filed Information Disclosure Statement.

/Irvin Dingle/
Irvin Dingle
Petitions Examiner
Office of Petitions

---

[1] The request to apply the issue fee to the new Notice may be satisfied by completing and returning the new Issue Fee Transmittal Form PTOL-85(b), which includes the following language thereon: Commissioner for Patents is requested to apply the Issue Fee and Publication Fee (if any) or re-apply any previously paid issue fee to the application identified above. Petitioner is advised that, whether a fee is indicated as being due or not, the Issue Fee Transmittal Form **must** be completed and timely submitted to avoid abandonment. Note the language in bold text on the first page of the Notice of Allowance and Fee(s) Due (PTOL-85).

PTO/SB/20PCT-KR (06-10)
Approved for use through 01/31/2012. OMB 0651-0058
U.S. Patent and Trademark Office; U. S. DEPARTMENT OF COMMERCE
Under the Paperwork Reduction Act of 1995, no persons are required to respond to a collection of information unless it displays a valid OMB control number.

REQUEST FOR PARTICIPATION IN THE PATENT COOPERATION TREATY - PATENT PROSECUTION HIGHWAY (PCT-PPH) PILOT PROGRAM BETWEEN THE KOREAN INTELLECTUAL PROPERTY OFFICE (KIPO) AND THE USPTO

Application No:	12610702	Filing date:	11-02-2009
First Named Inventor:	David Antonio Hernandez		
Title of the Invention:	ILLNESS SPECIFIC DIAGNOSTIC SYSTEM		

THIS REQUEST FOR PARTICIPATION IN THE PCT-PPH PILOT PROGRAM ALONG WITH THE REQUIRED DOCUMENTS MUST BE SUBMITTED VIA EFS-WEB. INFORMATION REGARDING EFS-WEB IS AVAILABLE AT HTTP://WWW.USPTO.GOV/EBC/EFS_HELP.HTML

APPLICANT HEREBY REQUESTS PARTICIPATION IN THE PCT-PPH PROGRAM AND PETITIONS TO MAKE THE ABOVE-IDENTIFIED APPLICATION SPECIAL UNDER THE PCT-PPH PROGRAM.

The above-identified application is (1) a national stage entry of the corresponding PCT application, or (2) a national stage entry of another PCT application which claims priority to the corresponding PCT application, or (3) a national application that claims domestic/ foreign priority to the corresponding PCT application, or (4) a national application which forms the basis for the priority claim in the corresponding PCT application, or (5) a continuing application of a U.S. application that satisfies one of (1) to (4) above, or (6) a U.S. application that claims domestic benefit to a U.S. provisional application which forms the basis for the priority claim in the corresponding PCT application.

The corresponding PCT application number(s) is/are: PCT/US2010/028260

The international filing date of the corresponding PCT application(s) is/are: 23 March 2010 (23.03.2010)

I. List of Required Documents:

a. **A copy of the latest international work product (WO/ISA, WO/IPEA, or IPER) in the above–identified corresponding PCT application(s)**

☐ Is attached.

☑ Is not attached because the document is already in the U.S. application.

b. **A copy of all claims which were indicated as having novelty, inventive step and industrial applicability in the above-identified corresponding PCT application(s).**

☐ Is attached.

☑ Is not attached because the document is already in the U.S. application.

c. **English translations of the documents in a. and b. above are attached (if the documents are not in the English language). A statement that the English translation is accurate is attached for the document in b. above.**

This collection of information is required by 35 U.S.C. 119, 37 CFR 1.55, and 37 CFR 1.102(d). The information is required to obtain or retain a benefit by the public, which is to file (and by the USPTO to process) an application. Confidentiality is governed by 35 U.S.C. 122 and 37 CFR 1.11 and 1.14. This collection is estimated to take 2 hours to complete, including gathering, preparing, and submitting the completed application form to the USPTO. Time will vary depending upon the individual case. Any comments on the amount of time you require to complete this form and/or suggestions for reducing this burden should be sent to the Chief Information Officer, U.S. Patent and Trademark Office, U.S. Department of Commerce, P.O. Box 1450, Alexandria, VA 22313-1450. DO NOT SEND FEES OR COMPLETED FORMS TO THIS ADDRESS.

Approved for use through 01/31/2012. OMB 0651-0058
U.S.Patent and Trademark Office; U.S. DEPARTMENT OF COMMERCE
Under the Paperwork Reduction Act of 1995, no persons are required to respond to a collection of information unless it displays a valid OMB control number.

REQUEST FOR PARTICIPATION IN THE PCT-PPH PILOT PROGRAM BETWEEN THE KIPO AND THE USPTO

(continued)

Application No.:	12610702
First Named Inventor:	David Antonio Hernandez

d. **(1) An information disclosure statement listing the documents cited in the international work products (ISR, WO/ISA, WO/IPEA, IPER) of the corresponding PCT application.**

- [✔] Is attached
- [ ] Has already been filed in the above-identified U.S. application on _____

(2) Copies of all documents (except) for U.S. patents or U.S. patent application publications)

- [✔] Are attached.
- [ ] Have already been filed in the above-identified U.S. application on _____

II. Claims Correspondence Table:

Claims in US Application	Patentable Claims in the corresponding PCT Application	Explanation regarding the correspondence
1-24	1-24	Identical claims.

III. All the claims in the US application sufficiently correspond to the patentable claims in the corresponding PCT application.

Signature /anton j hopen/	Date 2011-12-12
Name (Print/Typed) Anton J. Hopen	Registration Number 41849

Privacy Act Statement

The **Privacy Act of 1974 (P.L. 93-579)** requires that you be given certain information in connection with your submission of the attached form related to a patent application or patent. Accordingly, pursuant to the requirements of the Act, please be advised that: (1) the general authority for the collection of this information is 35 U.S.C. 2(b)(2); (2) furnishing of the information solicited is voluntary; and (3) the principal purpose for which the information is used by the U.S. Patent and Trademark Office is to process and/or examine your submission related to a patent application or patent. If you do not furnish the requested information, the U.S. Patent and Trademark Office may not be able to process and/or examine your submission, which may result in termination of proceedings or abandonment of the application or expiration of the patent.

The information provided by you in this form will be subject to the following routine uses:

1. The information on this form will be treated confidentially to the extent allowed under the Freedom of Information Act (5 U.S.C. 552) and the Privacy Act (5 U.S.C 552a). Records from this system of records may be disclosed to the Department of Justice to determine whether disclosure of these records is required by the Freedom of Information Act.
2. A record from this system of records may be disclosed, as a routine use, in the course of presenting evidence to a court, magistrate, or administrative tribunal, including disclosures to opposing counsel in the course of settlement negotiations.
3. A record in this system of records may be disclosed, as a routine use, to a Member of Congress submitting a request involving an individual, to whom the record pertains, when the individual has requested assistance from the Member with respect to the subject matter of the record.
4. A record in this system of records may be disclosed, as a routine use, to a contractor of the Agency having need for the information in order to perform a contract. Recipients of information shall be required to comply with the requirements of the Privacy Act of 1974, as amended, pursuant to 5 U.S.C. 552a(m).
5. A record related to an International Application filed under the Patent Cooperation Treaty in this system of records may be disclosed, as a routine use, to the International Bureau of the World Intellectual Property Organization, pursuant to the Patent Cooperation Treaty.
6. A record in this system of records may be disclosed, as a routine use, to another federal agency for purposes of National Security review (35 U.S.C. 181) and for review pursuant to the Atomic Energy Act (42 U.S.C. 218(c)).
7. A record from this system of records may be disclosed, as a routine use, to the Administrator, General Services, or his/her designee, during an inspection of records conducted by GSA as part of that agency's responsibility to recommend improvements in records management practices and programs, under authority of 44 U.S.C. 2904 and 2906. Such disclosure shall be made in accordance with the GSA regulations governing inspection of records for this purpose, and any other relevant (*i.e.*, GSA or Commerce) directive. Such disclosure shall not be used to make determinations about individuals.
8. A record from this system of records may be disclosed, as a routine use, to the public after either publication of the application pursuant to 35 U.S.C. 122(b) or issuance of a patent pursuant to 35 U.S.C. 151. Further, a record may be disclosed, subject to the limitations of 37 CFR 1.14, as a routine use, to the public if the record was filed in an application which became abandoned or in which the proceedings were terminated and which application is referenced by either a published application, an application open to public inspection or an issued patent.
9. A record from this system of records may be disclosed, as a routine use, to a Federal, State, or local law enforcement agency, if the USPTO becomes aware of a violation or potential violation of law or regulation.

UNITED STATES PATENT AND TRADEMARK OFFICE

Commissioner for Patents
United States Patent and Trademark Office
P.O. Box 1450

Smith & Hopen, P.A.
Attn: General Patent Matters
180 Pine Avenue North
Oldsmar FL 34677

MAILED
FEB 06 2012
OFFICE OF PETITIONS

In re Application of
David Antonio HERNANDEZ
Application No. 12/610,702
Filed: November 2, 2009
Atty. Docket No.: 2128.01
For: ILLNESS SPECIFIC DIAGNOSTIC SYSTEM

: DECISION ON REQUEST TO
: PARTICIPATE IN PCT-PPH PROGRAM
: AND PETITION TO MAKE SPECIAL
: UNDER 37 CFR 1.102(a)

This is a decision on the request to participate in the PCT Patent Prosecution Highway (PCT-PPH) program and the petition under 37 CFR 1.102(a), filed December 12, 2011, to make the above-identified application special.

The request and petition are **DENIED**.

A grantable request to participate in the PCT –PPH program and petition to make special under 37 CFR 1.102(a) require:

(1) the U.S. application must have an eligible relationship to one or more PCT application where the ISA or IPEA are the JPO, EPO, KIPO, IPAU, Russia, Spain, Finland, Austria, or USPTO;

(2) at least one claim in the PCT application has novelty, inventive step, and industrial applicability and must be free of any observations in Box VIII in the latest work product in the international stage or applicant must identify and explain why the claim(s) is/are not subject to the observation in Box VIII;

(3) applicant must submit a copy of the claim(s) from the PCT application(s) that have novelty, inventive step, and industrial applicability along with an English translation thereof and a statement that the English translation is accurate, if the claims are not in the English language;

(4) all the claims in the U.S. application must sufficiently correspond or be amended to sufficiently correspond to the claim(s) that have novelty, inventive step, and industrial applicability in the PCT application(s);

(5) examination of the U.S. application has not begun;

(6) applicant must submit a copy of the latest international work product from the PCT application indicating that the claim(s) have novelty, inventive step, and industrial applicability along with an English translation thereof;

(7) applicant must submit an IDS listing the documents cited by the PCT examiner in the international work product along with copies of documents except U.S. patents or U.S. patent application publications; and

(8) applicant is required to submit a claims correspondence table in English which indicates how all the claims in the U.S. application correspond to the claims indicated as having novelty, inventive step, and industrial applicability in the latest international work product.

Requirements (1) to (4), and (6) to (8) above are considered to have been met. However, the request to participate in the PPH program and petition fail to meet requirement (5).

Regarding requirement (5), requirement (5) is not met because an Office action in the instant application was mailed on January 9, 2012.

Telephone inquiries concerning this decision should be directed to Robert DeWitty, Petition Attorney, Office of Petitions at 571-272-8427.

All other inquiries concerning the examination or status of the application is accessible in the PAIR system at http://www.uspto.gov/ebc/index.html.

Anthony Knight
Director
Office of Petitions

UNITED STATES PATENT AND TRADEMARK OFFICE

Commissioner for Patents
United States Patent and Trademark Office
P.O. Box 1450
Alexandria, VA 22313-1450
www.uspto.gov

AGERE
LERNER, DAVID et al.
600 SOUTH AVENUE WEST
WESTFIELD, NJ 07090

MAILED

SEP 27 2010

OFFICE OF PETITIONS

In re Application of	:	
Samir CHAUDHRY, et *al.*	:	
Application No. 12/610,733	:	DECISION GRANTING PETITION
Filed: November 2, 2009	:	UNDER 37 CFR 1.313(c)(2)
Attorney Docket No. **AGERE 3.0-069 CONT CONT D**	:	

This is a decision on the petition under 37 CFR 1.313(c)(2), filed September 24, 2010, to withdraw the above-identified application from issue after payment of the issue fee.

The petition is **GRANTED**.

The above-identified application is withdrawn from issue for consideration of a submission under 37 CFR 1.114 (request for continued examination). *See* 37 CFR 1.313(c)(2).

Petitioner is advised that the issue fee paid on September 23, 2010 cannot be refunded. If, however, this application is again allowed, petitioner may request that it be applied towards the issue fee required by the new Notice of Allowance.[1]

Telephone inquiries should be directed to the undersigned at (571) 272-7253.

This application is being referred to Technology Center AU 2815 for processing of the request for continued examination under 37 CFR 1.114 and for consideration of the concurrently filed information disclosure statement.

/Monica A. Graves/
Petitions Examiner, Office of Petitions

---

[1] *The request to apply the issue fee to the new Notice may be satisfied by completing and returning the new Part B – Fee(s) Transmittal Form (along with any balance due at the time of submission). Petitioner is advised that the Issue Fee Transmittal Form* ***must*** *be completed and timely submitted to avoid abandonment of the application.*

PTO/SB/20PCT-KR (06-10)
Approved for use through 01/31/2012. OMB 0651-0058
U.S. Patent and Trademark Office; U. S. DEPARTMENT OF COMMERCE
Under the Paperwork Reduction Act of 1995, no persons are required to respond to a collection of information unless it displays a valid OMB control number.

REQUEST FOR PARTICIPATION IN THE PATENT COOPERATION TREATY - PATENT PROSECUTION HIGHWAY (PCT-PPH) PILOT PROGRAM BETWEEN THE KOREAN INTELLECTUAL PROPERTY OFFICE (KIPO) AND THE USPTO

Application No:	12/610,760	Filing date:	November 2, 2009
First Named Inventor:	David E. Quinn		
Title of the Invention:	THERMOMETER FOR DETERMINING THE TEMPERATURE OF AN ANIMAL'S EAR DRUM AND METHOD OF USING SAME		

THIS REQUEST FOR PARTICIPATION IN THE PCT-PPH PILOT PROGRAM ALONG WITH THE REQUIRED DOCUMENTS MUST BE SUBMITTED VIA EFS-WEB. INFORMATION REGARDING EFS-WEB IS AVAILABLE AT HTTP://WWW.USPTO.GOV/EBC/EFS_HELP.HTML

APPLICANT HEREBY REQUESTS PARTICIPATION IN THE PCT-PPH PROGRAM AND PETITIONS TO MAKE THE ABOVE-IDENTIFIED APPLICATION SPECIAL UNDER THE PCT-PPH PROGRAM.

The above-identified application is (1) a national stage entry of the corresponding PCT application, or (2) a national stage entry of another PCT application which claims priority to the corresponding PCT application, or (3) a national application that claims domestic/ foreign priority to the corresponding PCT application, or (4) a national application which forms the basis for the priority claim in the corresponding PCT application, or (5) a continuing application of a U.S. application that satisfies one of (1) to (4) above, or (6) a U.S. application that claims domestic benefit to a U.S. provisional application which forms the basis for the priority claim in the corresponding PCT application.

The corresponding PCT application number(s) is/are: PCT/US10/53718

The international filing date of the corresponding PCT application(s) is/are: 10-22-2010

I. List of Required Documents:

a. **A copy of the latest international work product (WO/ISA, WO/IPEA, or IPER) in the above–identified corresponding PCT application(s)**

☑ Is attached.

☐ Is not attached because the document is already in the U.S. application.

b. **A copy of all claims which were indicated as having novelty, inventive step and industrial applicability in the above-identified corresponding PCT application(s).**

☑ Is attached.

☐ Is not attached because the document is already in the U.S. application.

c. **English translations of the documents in a. and b. above are attached (if the documents are not in the English language). A statement that the English translation is accurate is attached for the document in b. above.**

This collection of information is required by 35 U.S.C. 119, 37 CFR 1.55, and 37 CFR 1.102(d). The information is required to obtain or retain a benefit by the public, which is to file (and by the USPTO to process) an application. Confidentiality is governed by 35 U.S.C. 122 and 37 CFR 1.11 and 1.14. This collection is estimated to take 2 hours to complete, including gathering, preparing, and submitting the completed application form to the USPTO. Time will vary depending upon the individual case. Any comments on the amount of time you require to complete this form and/or suggestions for reducing this burden should be sent to the Chief Information Officer, U.S. Patent and Trademark Office, U.S. Department of Commerce, P.O. Box 1450, Alexandria, VA 22313-1450. DO NOT SEND FEES OR COMPLETED FORMS TO THIS ADDRESS.

Approved for use through 01/31/2012. OMB 0651-0058
U.S.Patent and Trademark Office; U.S. DEPARTMENT OF COMMERCE
Under the Paperwork Reduction Act of 1995, no persons are required to respond to a collection of information unless it displays a valid OMB control number.

REQUEST FOR PARTICIPATION IN THE PCT-PPH PILOT PROGRAM BETWEEN THE KIPO AND THE USPTO

(continued)

Application No.:	12/610,760
First Named Inventor:	David E. Quinn

d. **(1) An information disclosure statement listing the documents cited in the international work products (ISR, WO/ISA, WO/IPEA, IPER) of the corresponding PCT application.**

☐ Is attached

☑ Has already been filed in the above-identified U.S. application on 06-21-2011

(2) Copies of all documents (except) for U.S. patents or U.S. patent application publications)

☐ Are attached.

☑ Have already been filed in the above-identified U.S. application on 06-21-2011

II. Claims Correspondence Table:

Claims in US Application	Patentable Claims in the corresponding PCT Application	Explanation regarding the correspondence
3,5,8-11,13-18,20-21	3,5,8-11,13-18,20-21	Identical Claim Language; Claims meet requirements of PCT Article 33(2) and (3) with respect to novelty and inventive step, (cont. below)
		(cont. from above) as indicated in the International Search Report and Written Opinion dated 5/26/11 for PCT/US2010/053718.
1-21	1-21	Identical Claim Language; Claims are industrially applicable under PCT Article 33(4), (cont. below)
		(cont. from above) as indicated in the International Search Report and Written Opinion dated 5/26/11 for PCT/US2010/053718.

III. All the claims in the US application sufficiently correspond to the patentable claims in the corresponding PCT application.

Signature /Roger P. Bonenfant/	Date 2011-06-28
Name (Print/Typed) Roger P. Bonenfant	Registration Number 58,030

Privacy Act Statement

The **Privacy Act of 1974 (P.L. 93-579)** requires that you be given certain information in connection with your submission of the attached form related to a patent application or patent. Accordingly, pursuant to the requirements of the Act, please be advised that: (1) the general authority for the collection of this information is 35 U.S.C. 2(b)(2); (2) furnishing of the information solicited is voluntary; and (3) the principal purpose for which the information is used by the U.S. Patent and Trademark Office is to process and/or examine your submission related to a patent application or patent. If you do not furnish the requested information, the U.S. Patent and Trademark Office may not be able to process and/or examine your submission, which may result in termination of proceedings or abandonment of the application or expiration of the patent.

The information provided by you in this form will be subject to the following routine uses:

1. The information on this form will be treated confidentially to the extent allowed under the Freedom of Information Act (5 U.S.C. 552) and the Privacy Act (5 U.S.C 552a). Records from this system of records may be disclosed to the Department of Justice to determine whether disclosure of these records is required by the Freedom of Information Act.
2. A record from this system of records may be disclosed, as a routine use, in the course of presenting evidence to a court, magistrate, or administrative tribunal, including disclosures to opposing counsel in the course of settlement negotiations.
3. A record in this system of records may be disclosed, as a routine use, to a Member of Congress submitting a request involving an individual, to whom the record pertains, when the individual has requested assistance from the Member with respect to the subject matter of the record.
4. A record in this system of records may be disclosed, as a routine use, to a contractor of the Agency having need for the information in order to perform a contract. Recipients of information shall be required to comply with the requirements of the Privacy Act of 1974, as amended, pursuant to 5 U.S.C. 552a(m).
5. A record related to an International Application filed under the Patent Cooperation Treaty in this system of records may be disclosed, as a routine use, to the International Bureau of the World Intellectual Property Organization, pursuant to the Patent Cooperation Treaty.
6. A record in this system of records may be disclosed, as a routine use, to another federal agency for purposes of National Security review (35 U.S.C. 181) and for review pursuant to the Atomic Energy Act (42 U.S.C. 218(c)).
7. A record from this system of records may be disclosed, as a routine use, to the Administrator, General Services, or his/her designee, during an inspection of records conducted by GSA as part of that agency's responsibility to recommend improvements in records management practices and programs, under authority of 44 U.S.C. 2904 and 2906. Such disclosure shall be made in accordance with the GSA regulations governing inspection of records for this purpose, and any other relevant (*i.e.*, GSA or Commerce) directive. Such disclosure shall not be used to make determinations about individuals.
8. A record from this system of records may be disclosed, as a routine use, to the public after either publication of the application pursuant to 35 U.S.C. 122(b) or issuance of a patent pursuant to 35 U.S.C. 151. Further, a record may be disclosed, subject to the limitations of 37 CFR 1.14, as a routine use, to the public if the record was filed in an application which became abandoned or in which the proceedings were terminated and which application is referenced by either a published application, an application open to public inspection or an issued patent.
9. A record from this system of records may be disclosed, as a routine use, to a Federal, State, or local law enforcement agency, if the USPTO becomes aware of a violation or potential violation of law or regulation.

UNITED STATES PATENT AND TRADEMARK OFFICE

UNITED STATES DEPARTMENT OF COMMERCE
United States Patent and Trademark Office
Address: COMMISSIONER FOR PATENTS
P.O. Box 1450
Alexandria, Virginia 22313-1450
www.uspto.gov

APPLICATION NO.	FILING DATE	FIRST NAMED INVENTOR	ATTORNEY DOCKET NO.	CONFIRMATION NO.
12/610,760	11/02/2009	David E. Quinn	3036532 US01	1122

88750 7590 07/27/2011
HISCOCK & BARCLAY, LLP
ONE PARK PLACE, 300 S. STATE ST.
SYRACUSE, NY 13202

EXAMINER
RAMOS FELICIANO, ELISEO

ART UNIT	PAPER NUMBER
2857	

NOTIFICATION DATE	DELIVERY MODE
07/27/2011	ELECTRONIC

Please find below and/or attached an Office communication concerning this application or proceeding.

The time period for reply, if any, is set in the attached communication.

Notice of the Office communication was sent electronically on above-indicated "Notification Date" to the following e-mail address(es):

ipdocket@hblaw.com

UNITED STATES PATENT AND TRADEMARK OFFICE

Commissioner for Patents
United States Patent and Trademark Office
P.O. Box 1450
Alexandria, VA 22313-1450
www.uspto.gov

HISCOCK & BARCLAY, LLP
ONE PARK PLACE, 300 S. STATE ST.
SYRACUSE NY 13202

In re Application of	
QUINN et al.	**: DECISION ON REQUEST TO**
Application No.: 12/610,760	**: PARTICIPATE IN THE PATENT**
Filed: 02 November 2009	**: PROSECUTION HIGHWAY**
Attorney Docket No.: 3036532 US01	**: PROGRAM AND PETITION**
For: THERMOMETER FOR	**: TO MAKE SPECIAL UNDER**
DETERMINING THE TEMPERATURE	**: 37 CFR 1.102(a)**
OF AN ANIMAL'S EAR DRUM AND	
METHOD OF USING SAME	

This is a decision on the request to participate in the PCT Patent Prosecution Highway (PCT-PPH) pilot program and the petition under 37 CFR 1.102(a), filed on 28 June 2011, to make the above-identified application special.

The request and petition are **DISMISSED**.

Discussion

A grantable request to participate in the PCT-PPH pilot program and petition to make special require:

(1) The U.S. application must have an eligible relationship to one or more PCT applications where the ISA or IPEA are the JPO, EPO, KIPO, IPAU, Russia, Spain, Finland, Austria, or USPTO;

(2) At least one claim in the PCT application has novelty, inventive step, and industrial applicability and must be free of any observations in Box VIII in the latest work product in the international stage or applicant must identify and explain why the claim(s) is/are not subject to the observation in Box VIII;

(3) Applicant must submit a copy of the claim(s) from the PCT application(s) that have novelty, inventive step, and industrial applicability along with an English translation thereof and a statement that the English translation is accurate, if the claims are not in the English language;

(4) All the claims in the U.S. application must sufficiently correspond or be amended to sufficiently correspond to the claim(s) that have novelty, inventive step, and industrial applicability in the PCT application(s);

(5) Examination of the U.S. application has not begun;

(6) Applicant must submit a copy of the latest international work product from the PCT application indicating that the claim(s) have novelty, inventive step, and industrial applicability along with an English translation thereof.

(7) Applicant must submit an IDS listing the documents cited by the PCT examiner in the international work product along with copies of documents except U.S. patents or U.S. patent application publications.

(8) Applicant is required to submit a claims correspondence table in English which indicates how all the claims in the U.S. application correspond to the claims indicated as having novelty, inventive step and industrial applicability in the latest international work product.

Requirements (1-3) and (5-8) above are considered to have been met. However, the request to participate in the PPH pilot program and petition fails meet requirements (4).

Regarding the requirement of condition (4), applicant has failed to ensure that all the claims in the U.S. application sufficiently correspond to the claims that have novelty, inventive step, and industrial applicability in the PCT application. For example, US claims 1, 2, 4, 6, 7, 12, and 19 do not correspond to PCT claims having novelty, inventive step, and industrial applicability. These PCT claims were held to lack novelty.

Applicant is given **ONE** opportunity within a time period of **ONE MONTH or THIRTY DAYS**, whichever is longer, from the mailing date of this decision to correct the deficiencies. **NO EXTENSION OF TIME UNDER 37 CFR 1.136 IS PERMITTED.** If the deficiencies are not corrected with the time period given, the application will await action in its regular turn.

Response must be filed via the Electronic Filing System (EFS) using the document description: Petition to make special under PCT – Patent Pros Hwy. Any preliminary amendments and IDS submitted with the PPH documents must be separately indexed as a preliminary amendment and IDS, respectively.

Telephone inquiries concerning this decision should be directed to Colleen Dunn at 571-272-1170.

All other inquiries concerning the examination or status of the application is accessible in the PAIR system at http://www.uspto.gov/ebc/index.html.

For:
Colleen Dunn
Quality Assurance Specialist
Technology Center 2800

UNITED STATES PATENT AND TRADEMARK OFFICE

Commissioner for Patents
United States Patent and Trademark Office
P.O. Box 1450
Alexandria, VA 22313-1450
www.uspto.gov

MOTOROLA INC
600 NORTH US HIGHWAY 45
W4 - 39Q
LIBERTYVILLE IL 60048-5343

MAILED
OCT 08 2010
OFFICE OF PETITIONS

In re Application of	:	
Nicholas A. JINKINSON et al.	:	DECISION REFUSING STATUS
Application No. 12/610,764	:	UNDER 37 CFR 1.47(a)
Filed: November 2, 2009	:	
Attorney Docket No. CS36458	:	

This is in response to the petition under 37 CFR 1.183, filed May 17, 2010 which is properly treated as a petition under 37 CFR 1.47(a) to accept this application notwithstanding the absence of the signature of a non-signing inventor.

The petition is dismissed.

Rule 47 applicant is given TWO MONTHS from the mailing date of this decision to reply, correcting the below-noted deficiencies. Any reply should be entitled "Request for Reconsideration of Petition Under 37 CFR 1.47(a)," and should only address the deficiencies noted below, except that the reply may include an oath or declaration executed by the non-signing inventor. **FAILURE TO RESPOND WILL RESULT IN ABANDONMENT OF THE APPLICATION.** Any extensions of time will be governed by 37 CFR 1.136(a).

A grantable petition under 37 CFR 1.47(a) requires: (1) proof that the non-signing inventor cannot be reached or refuses to sign the oath or declaration after having been presented with the application papers (specification, claims and drawings); (2) an acceptable oath or declaration in compliance with 35 U.S.C. §§ 115 and 116; (3) the petition fee; and (4) a statement of the last known address of the non-signing inventor. Applicant lacks item (1) set forth above.

As to item (1), rule 47 applicant must demonstrate with documented evidence that an inventor refuses to join in the application after having been presented with the application papers (specification, claims, drawings and oath or declaration). There is no documented evidence herein that joint inventor Ryan A. Powell was presented with a copy of the complete application papers for this application. If the joint inventor was not presented with a copy of the application papers for this application, then the joint inventor could not attest that they have "reviewed and understand the application papers" and could not execute the declaration they were requested to sign. Did the joint inventor receive a copy of the application papers? The fact that an application may contain proprietary information does not relieve the rule 47 applicant of the responsibility to

present the application papers to the joint inventors if the inventors are willing to receive the papers in order to sign the oath or declaration. Unless petitioner can show that a copy of the application papers was presented to joint inventor Ryan A. Powell, then petitioner will have to mail a copy of the complete application papers (specification, claims and drawings) to the last known address of the joint inventors , return receipt requested. A cover letter of instructions should accompany the mailing of the application papers setting a deadline or a statement that no response will constitute a refusal. This sort of ultimatum lends support to a finding of refusal by conduct. **The proof of the pertinent events should be made by a statement of someone with firsthand knowledge of the events and should include documentary evidence, such as certified mail return receipt, cover letter of instructions, telegram, etc.** *See* MPEP 409.03(d).

When it is concluded by the rule 47 applicant that an omitted inventor's conduct constitutes a refusal, all facts upon which that conclusion is based should be stated in an affidavit or declaration. If there is documentary evidence to support facts alleged in the affidavit or declaration, such evidence must be submitted.

Whenever an omitted inventor gives a reason for refusing to sign the application oath or declaration, that reason should be stated in the affidavit or declaration.

A petition under 37 CFR 1.47(a) requires the petition fee of $200 set forth in 37 CFR 1.17(g). As petitioner submitted a petition fee of $130, the balance due of $70 is being charged to petitioner's Deposit Account No. 50-2117.

Further correspondence with respect to this matter should be addressed as follows:

By mail: Mail Stop PETITIONS
Commissioner for Patents
Post Office Box 1450
Alexandria, VA 22313-1450

By hand: Customer Service Window
Mail Stop Petitions
Randolph Building
401 Dulany Street
Alexandria, VA 22314

By fax: (571) 273-8300
ATTN: Office of Petitions

Telephone inquiries should be directed to the undersigned at (571) 272-7099.

David Bucci
Petitions Examiner
Office of Petitions

UNITED STATES PATENT AND TRADEMARK OFFICE

Commissioner for Patents
United States Patent and Trademark Office
P.O. Box 1450
Alexandria, VA 22313-1450
www.uspto.gov

MOTOROLA MOBILITY, INC
600 NORTH US HIGHWAY 45
W2-55BB
LIBERTYVILLE IL 60048-5343

MAILED

JUN 09 2011

OFFICE OF PETITIONS

In re Application of	:	
Nicholas A. JINKINSON et al.	:	DECISION REFUSING STATUS
Application No. 12/610,764	:	UNDER 37 CFR 1.47(a)
Filed: November 2, 2009	:	
Attorney Docket No. CS36458	:	

This is in response to the petition under 37 CFR 1.47(a), filed November 19, 2010.

The petition is dismissed.

Rule 47 applicant is given TWO MONTHS from the mailing date of this decision to reply, correcting the below-noted deficiencies. Any reply should be entitled "Request for Reconsideration of Petition Under 37 CFR 1.47(a)," and should only address the deficiencies noted below, except that the reply may include an oath or declaration executed by the non-signing inventor. **FAILURE TO RESPOND WILL RESULT IN ABANDONMENT OF THE APPLICATION.** Any extensions of time will be governed by 37 CFR 1.136(a).

A grantable petition under 37 CFR 1.47(a) requires: (1) proof that the non-signing inventor cannot be reached or refuses to sign the oath or declaration after having been presented with the application papers (specification, claims and drawings); (2) an acceptable oath or declaration in compliance with 35 U.S.C. §§ 115 and 116; (3) the petition fee; and (4) a statement of the last known address of the non-signing inventor. Applicant lacks items (1) and (2) set forth above.

As to item (1), the applicable statute (35 U.S.C.§ 116) requires that a "diligent effort" have been expended in attempting to find or reach the non-signing inventor. *See* MPEP 409.03(a). The showing currently fails to demonstrate, with a documented showing, that a diligent effort was made to find or locate non-signing inventor Ryan A. Powell, such that the declaration can be accepted under 37 CFR 1.47(a). Where inability to find or locate a named inventor(s) is alleged, a statement of facts should be submitted that fully describes the exact facts which are relied on to establish that a *diligent effort* was made to locate the inventor.

Petitioner has not demonstrated that all efforts were expended in trying to locate non-signing inventor Powell. In this regard, petitioner should, at the very least, conduct a search of the

regional or national registry(s). The results of such search should be made in any future petition for reconsideration. *See* MPEP 409.03(d). Additionally, petitioner should state whether he has access to inventor Powell's personnel records and, if so, what does inspection of the records reveal as to a current address, forwarding address, or an address of the nearest living relative? What does inspection of the phone directories for those address locations reveal? Further, the petition fails to indicate that correspondence was ever mailed unsuccessfully to the inventor's last known address. Therefore, at the very least, petitioner should mail correspondence to the inventor's last known address, return receipt and/or forwarding address requested. If a forwarding address is provided, petitioner should then mail a complete copy of the application papers (specification, claims, drawings, oath, etc.) to Mr. Powell's address, return receipt requested, along with a cover letter of instructions which includes a deadline or a statement that no response will constitute a refusal. This sort of ultimatum lends support to a finding of refusal by conduct. If the papers are returned and all other attempts to locate or reach the inventor, e.g., through personnel records, co-workers, E-mail, the Internet or the telephone, etc., continue to fail, then applicant will have established that the inventor cannot be reached after diligent effort or has refused to join in the application. **The statements of facts must be signed, where at all possible, by a person having firsthand knowledge of the facts recited therein and should be accompanied by documentary evidence in support of the statement of facts.** It is important that the forthcoming communication contain statements of fact as opposed to conclusions.

Where there is an express or oral refusal, that fact, along with the time and place of the refusal, must be stated in an affidavit or declaration by the party to whom the refusal was made. Where there is a written refusal, a copy of the document(s) evidencing that refusal must be made part of the affidavit or declaration.

When it is concluded by the rule 47 applicant that an omitted inventor's conduct constitutes a refusal, all facts upon which that conclusion is based should be stated in an affidavit or declaration. If there is documentary evidence to support facts alleged in the affidavit or declaration, such evidence must be submitted.

Whenever an omitted inventor gives a reason for refusing to sign the application oath or declaration, that reason should be stated in the affidavit or declaration.

Further correspondence with respect to this matter should be addressed as follows:

By mail: Mail Stop PETITIONS
Commissioner for Patents
Post Office Box 1450
Alexandria, VA 22313-1450

By hand: Customer Service Window
Mail Stop Petitions
Randolph Building
401 Dulany Street
Alexandria, VA 22314

By fax: (571) 273-8300
ATTN: Office of Petitions

Telephone inquiries should be directed to David Bucci at (571) 272-7099.

David Bucci
Petitions Examiner
Office of Petitions

UNITED STATES PATENT AND TRADEMARK OFFICE

Commissioner for Patents
United States Patent and Trademark Office
P.O. Box 1450
Alexandria, VA 22313-1450
www.uspto.gov

MOTOROLA MOBILITY, INC
600 NORTH US HIGHWAY 45
W2-55BB
LIBERTYVILLE IL 60048-5343

MAILED

SEP 21 2011

OFFICE OF PETITIONS

In re Application of	:
Nicholas A. JINKINSON et al.	: DECISION NOTING JOINDER OF
Application No. 12/610,764	: INVENTOR AND PETITION
Filed: November 2, 2009	: UNDER 37 CFR 1.47(a)
Attorney Docket No. CS36458	:

Papers filed on August 9, 2011 in response to a "Decision Refusing Status Under 37 CFR 1.47(a)," mailed June 9, 2011, included a Declaration signed by a previously non-signing inventor, Ryan A. Powell, in compliance with 37 CFR 1.63.

The petition is **DISMISSED AS MOOT**.

In view of the joinder of the inventor, further consideration under § 1.47(a) is not necessary. This application does not have any Rule 1.47 status and no such status should appear on the record for this file. This application need not be returned to this Office for any further consideration under 37 CFR 1.47(a).

This application is being referred to the Office of Patent Application Processing.

Telephone inquiries should be directed to the undersigned at (571) 272-7099.

David Bucci
Petitions Examiner
Office of Petitions

Attorney Docket No. GEVO-018/01US 310142-2126 **PATENT**

IN THE UNITED STATES PATENT AND TRADEMARK OFFICE

In re App'n of: BUELTER, Thomas *et al.* Confirmation No.: 1171

Serial No.: 12/610,784 Group Art Unit: 1652

Filed: November 2, 2009 Examiner: PROUTY, Rebecca E.

For: **ENGINEERED MICROORGANISMS CAPABLE OF PRODUCING TARGET COMPOUNDS UNDER ANAEROBIC CONDITIONS**

VIA EFS-WEB

Commissioner for Patents
P.O. Box 1450
Alexandria, VA 22313-1450

PETITION TO MAKE SPECIAL

STATEMENT OF SPECIAL STATUS AND REQUEST TO PARTICIPATE IN THE GREEN TECHNOLOGY PILOT PROGRAM

Dear Sir,

Submitted herewith is the completed USPTO form PTO/SB/420 and a Petition to Make Special Pursuant to the Federal Register Notice of December 8, 2009, Vol. 74, No. 234, pp. 64666-8, to participate in the Green Technology Pilot Program as described in said Notice.

The above-reference application has been published (U.S. Patent Application Publication No. US-2010-0143997-A1). In accordance with the requirements for the Pilot Program, please charge Deposit Account No. 50-1283 for the publication fee set forth in 37 CFR 1.18(d).

Applicants submit that the application is directed to a single invention that relates to the development of renewable components for fuel blends, and as such, the claimed invention materially contributes to the discovery or development of renewable energy resources, enhances the quality of the environment and results in a more efficient utilization and conservation of energy resources.

If participation in the Green Technology Pilot Program is granted, Applicants hereby agree to make an election without traverse in a telephonic interview and elect an invention that meets the eligibility requirement if the Office determines that the claims are not directed to a single invention.

Filed concurrently with this petition is a Preliminary Amendment in compliance with 37 CFR 1.121. Upon entry of the amendment, the application will contain no more than three independent claims and twenty total claims and will not contain any multiple dependent claims.

The Commissioner is hereby authorized to charge any appropriate fees under 37 C.F.R. §§1.16, 1.17, and 1.21 that may be required by this paper, and to credit any overpayment, to Deposit Account No. 50-1283.

Dated: February 18, 2011

Respectfully submitted,
COOLEY LLP

CUSTOMER NO. 58249

By: Paul Wickman

Paul A. Wickman
Reg. No. 61,242

COOLEY LLP
ATTN: Patent Group
777 6th Street NW, Suite 1100
Washington, DC 20001
Tel: (720) 566-4250
Fax: (202) 842-7899

Doc Code: PET.GREEN
Document Description: Petition for Green Tech Pilot

PTO/SB/420 (11-10)
Approved for use through 01/31/2011. OMB 0651-0062
U.S. Patent and Trademark Office; U. S. DEPARTMENT OF COMMERCE
Under the Paperwork Reduction Act of 1995, no persons are required to respond to a collection of information unless it displays a valid OMB control number.

PETITION TO MAKE SPECIAL UNDER THE GREEN TECHNOLOGY PILOT PROGRAM

Attorney Docket Number: GEVO-018/01US	Application Number (if known): 12/610,784	Filing date: November 2, 2009
First Named Inventor: Thomas BUELTER		
Title: ENGINEERED MICROORGANISMS CAPABLE OF PRODUCING TARGET COMPOUNDS UNDER ANAEROBIC CONDITIONS		

APPLICANT HEREBY REQUESTS TO PARTICIPATE IN THE GREEN TECHNOLOGY PILOT PROGRAM FOR THE ABOVE-IDENTIFIED APPLICATION. See Instruction Sheet on page 2.

This petition must be timely filed electronically using the USPTO electronic filing system, EFS-Web.

1. By filing this petition:

   Applicant is requesting early publication: Applicant hereby requests early publication under 37 CFR 1.219 and the publication fee set forth in 37 CFR 1.18(d) accompanies this request.

2. By filing this petition: applicant is agreeing to make an election without traverse in a telephonic interview and elect an invention that meets the eligibility requirements for the Green Technology Pilot Program, if the Office determines that the claims are not obviously directed to a single invention. See Instruction Sheet.

3. This request is accompanied by statements of special status for the eligibility requirement.

4. The application contains no more than three (3) independent claims and twenty (20) total claims.

5. The application does not contain any multiple dependent claims.

6. Other attachments: (1) Preliminary Amendment and (2) Statement of Special Status

Signature /Paul A. Wickman/	Date February 22, 2011
Name (Print/Typed) Paul A. Wickman	Registration Number 61,242

Note: *Signatures of all the inventors or assignees of record of the entire interest or their representative(s) are required in accordance with 37 CFR 1.33 and 11.18. Please see 37 CFR 1.4(d) for the form of the signature. If necessary, submit multiple forms for more than one signature see below*.*

[X] *Total of 1 forms are submitted.

The information is required to obtain or retain a benefit by the public which is to file (and by the USPTO to process) an application. Confidentiality is governed by 35 U.S.C. 122 and 37 CFR 1.11 and 1.14. This collection is estimated to take 12 hours to complete, including gathering, preparing, and submitting the completed application form to the USPTO. Time will vary depending upon the individual case. Any comments on the amount of time you require to complete this form and/or suggestions for reducing this burden, should be sent to the Chief Information Officer, U.S. Patent and Trademark Office, U.S. Department of Commerce, P.O. Box 1450, Alexandria, VA 22313-1450. DO NOT SEND FEES OR COMPLETED FORMS TO THIS ADDRESS. **SEND TO: Commissioner for Patents, P.O. Box 1450, Alexandria, VA 22313-1450.**

If you need assistance in completing the form, call 1-800-PTO-9199 and select option 2.

UNITED STATES PATENT AND TRADEMARK OFFICE

UNITED STATES DEPARTMENT OF COMMERCE
United States Patent and Trademark Office
Address: COMMISSIONER FOR PATENTS
P.O. Box 1450
Alexandria, Virginia 22313-1450
www.uspto.gov

APPLICATION NO.	FILING DATE	FIRST NAMED INVENTOR	ATTORNEY DOCKET NO.	CONFIRMATION NO.
12/610,784	11/02/2009	Thomas Buelter	GEVO-018/01US 310142-2126	1171

58249 7590 03/07/2011
COOLEY LLP
ATTN: Patent Group
Suite 1100
777 - 6th Street, NW
WASHINGTON, DC 20001

EXAMINER
PROUTY, REBECCA E

ART UNIT	PAPER NUMBER
1652	

MAIL DATE	DELIVERY MODE
03/07/2011	PAPER

Please find below and/or attached an Office communication concerning this application or proceeding.

The time period for reply, if any, is set in the attached communication.

UNITED STATES PATENT AND TRADEMARK OFFICE

Commissioner for Patents
United States Patent and Trademark Office
P.O. Box 1450
Alexandria, VA 22313-1450
www.uspto.gov

MAR 0 7 2011

COOLEY LLP
ATTN: Patent Group
Suite 1100
777 - 6th Street, NW
WASHINGTON DC 20001

In re Application of	:	
BUELTER, Thomas *et al.*	:	DECISION ON PETITION
Application No. 12/610784	:	TO MAKE SPECIAL UNDER
Filed: November 2nd, 2009	:	THE GREEN TECHNOLOGY
Attorney Docket No. GEVO-018/01US 310142-2126	:	PILOT PROGRAM

This is a decision on the petition under 37 CFR 1.102, filed February 18, 2011, to make the above-identified application special under the pilot program for applications pertaining to Green Technologies as set forth in 74 Federal Register Notice 64666 (December 8, 2009) and amended by 75 Federal Register Notice 28554 (May 21, 2010) and 75 Federal Register Notice 69049 (November 10, 2010).

The petition is **GRANTED**.

A grantable petition to make an application special under 37 CFR 1.102 and the pilot program as set forth in 74 FR 64666 must be directed to a nonprovisional application filed under 35 USC 111(a) or be a national stage entry under 35 USC 371, exclusive of any reissue applications.

In order to qualify for special status, the following requirements must be met. 1) The application must have no more than 3 independent claims and no more than 20 total claims. 2) The application must not contain any multiple dependent claims. 3) The petition must state the basis for seeking special status, i.e., the claimed invention either: A) materially enhances the quality of the environment or B) materially contributes to: i) the discovery or development of renewable energy resources, ii) the more efficient utilization and conservation of energy resources, or iii) greenhouse gas emission reduction. 4) If the disclosure is not clear on its face that the claimed invention materially contributes under category (A) or (B), the petition must be accompanied by a statement by the applicant, assignee, or an attorney/agent registered to practice before the Office explaining how the materiality standard is met. 5) A statement that applicant will agree to make an election without traverse in a telephonic interview if a restriction requirement is made by the examiner. 6) The petition to make special must be filed electronically. 7) The petition must be filed at least one day prior to the date that a first Office Action appears in the Patent Application Information Retrieval (PAIR) system. 8) The petition must be accompanied by a

request for early publication in compliance with 37 CFR 1.219 and include the publication fee as set forth in 37 CFR 1.18(d).

The requirement for a fee for consideration of the petition to make special for applications pertaining to Green Technologies has been waived.

The instant petition complies with items 1 – 8 above. Accordingly, the above-identified application has been accorded "special" status.

Telephone inquires concerning this decision should be directed to Manjunath Rao at 571-272-0939.

The application is being forwarded to the Technology Center Art Unit 1652 for action on the merits commensurate with this decision.

/Manjunath Rao/

Manjunath Rao
Supervisory Patent Examiner &
POC for TC 1600 Green Tech Petitions
Technology Center 1600

UNITED STATES PATENT AND TRADEMARK OFFICE

Commissioner for Patents
United States Patent and Trademark Office
P.O. Box 1450
Alexandria, VA 22313-1450
www.uspto.gov

COZEN O'CONNOR
277 PARK AVENUE
20TH FLOOR
NEW YORK NY 10172

MAILED

OCT 22 2010

OFFICE OF PETITIONS

ON PETITION

In re Application of
Ani Tirpan
Application No. 12/610,816
Filed: November 2, 2009
Attorney Docket No: LONDON-256165

This is a decision on the petition filed September 23, 2010 under 37 CFR 1.137(b),[1] to revive the above-identified application.

The petition is **GRANTED**.

This application became abandoned for failure to timely reply to the non-Final Office Action mailed January 25, 2010. A shortened statutory period of three months was set for replying to the non-Final Office Action. No response having been timely filed, this application became abandoned April 27, 2010. Accordingly, a Notice of Abandonment was mailed September 2, 2010.

This matter is being referred to Technology Center 3728 for appropriate action on the amendment filed September 23, 2010.

Telephone inquiries concerning this matter should be directed to the undersigned Petitions Attorney at (571) 272-3212.

Patricia Faison-Ball
Senior Petitions Attorney
Office of Petitions

---

[1]Effective December 1, 1997, the provisions of 37 CFR 1.137(b) now provide that where the delay in reply was unintentional, a petition may be filed to revive an abandoned application or a lapsed patent pursuant to 37 CFR 1.137(b). A grantable petition filed under the provisions of 37 CFR 1.137(b) must be accompanied by:

(1) the required reply, unless previously filed. In a nonprovisional application abandoned for failure to prosecute, the required reply may be met by the filing of a continuing application. In a nonprovisional application filed on or after June 8, 1995, and abandoned for failure to prosecute, the required reply may also be met by the filing of a request for continued examination in compliance with § 1.114. In an application or patent, abandoned or lapsed for failure to pay the issue fee or any portion thereof, the required reply must be the payment of the issue fee or any outstanding balance thereof. In an application abandoned for failure to pay the publication fee, the required reply must include payment of the publication fee.

(2) the petition fee as set forth in 37 CFR 1.17(m);

(3) a statement that the entire delay in filing the required reply from the due date for the reply until the filing of a grantable petition pursuant to 37 CFR 1.137(b) was unintentional. The Commissioner may required additional information where there is a question whether the delay was unintentional; and

(4) any terminal disclaimer (and fee as set forth in 37 CFR 1.20(d)) required pursuant to 37 CFR 1.137(c)).

UNITED STATES PATENT AND TRADEMARK OFFICE

COMMISSIONER FOR PATENTS
UNITED STATES PATENT AND TRADEMARK OFFICE
P.O. BOX 1450
ALEXANDRIA, VA 22313-1450
WWW.USPTO.GOV

Paper No.

KRIEG DEVAULT LLP
ONE INDIANA SQUARE
SUITE 2800
INDIANAPOLIS IN 46204-2079

MAILED
MAR 28 2011
OFFICE OF PETITIONS

In re Application of	:	
Janssen et al.	:	
Application No. 12/610,830	:	DECISION ON PETITION
Filed: November 2, 2009	:	PURSUANT TO
Attorney Docket No. CECO-338	:	37 C.F.R. § 1.181(A)
Title: APPARATUS, SYSTEM, AND	:	
METHOD FOR AFTERTREATMENT	:	
CONTROL AND DIAGNOSTICS	:	

This is a decision on the petition pursuant to 37 C.F.R. § 1.181, filed on January 10, 2011.

BACKGROUND

The above-identified application became abandoned for failure to reply in a timely manner to the Notice of Missing Parts (notice), mailed November 18, 2009, which set a shortened statutory period for reply of two months and required the basic filing fee along with the surcharge associated with the late submission of the same, replacement drawings, and the search, examination, and additional claims fees. A response was received on June 21, 2010, along with a five-month extension of time under the provisions of 37 C.F.R. § 1.136(a). Accordingly, the above-identified application became abandoned on January 19, 2010. A notice of abandonment was mailed on December 3, 2010.

RELEVANT PORTION OF THE C.F.R.

37 C.F.R. § 1.8(b) sets forth, *in toto*:

> (b) In the event that correspondence is considered timely filed by being mailed or transmitted in accordance with paragraph (a) of this section, but not received in the U.S. Patent and Trademark Office after a reasonable amount of time has elapsed

> from the time of mailing or transmitting of the correspondence, or after the application is held to be abandoned, or after the proceeding is dismissed, terminated, or decided with prejudice, the correspondence will be considered timely if the party who forwarded such correspondence:
>
> (1) Informs the Office of the previous mailing or transmission of the correspondence promptly after becoming aware that the Office has no evidence of receipt of the correspondence;
>
> (2) Supplies an additional copy of the previously mailed or transmitted correspondence and certificate; and
>
> (3) Includes a statement which attests on a personal knowledge basis or to the satisfaction of the Director to the previous timely mailing or transmission. If the correspondence was sent by facsimile transmission, a copy of the sending unit's report confirming transmission may be used to support this statement.

ANALYSIS

With this petition, Petitioner has alleged that a response was timely filed on June 18, 2010, along with both a five-month extension of time and a certificate of mailing dated June 18, 2010. Office records show that on June 21, 2010, the Office received the basic filing fee along with the surcharge associated with the late submission of the same, replacement drawings, and the search, examination, and additional claims fees. It is noted that the transmittal form which was submitted concurrently therewith contains a certificate of mailing dated June 18, 2010.

Petitioner's argument has been considered, and it has been deemed to be persuasive. It is noted that the five-month extension of time that was submitted on June 18, 2010 extended the period for response out to June 18, 2010.

Considering the facts and circumstances of the delay at issue, as set forth on petition, it is concluded that Petitioner has met his burden of establishing that a response was timely submitted, pursuant to 37 C.F.R. § 1.8.

Accordingly, the petition pursuant to 37 C.F.R. § 1.181(a) is **GRANTED**. The holding of abandonment is **WITHDRAWN**.

CONCLUSION

The Office of Patent Application Processing (OPAP) will be notified of this decision, and jurisdiction over the application is transferred to OPAP, so that the application may receive further processing.

Petitioner will receive appropriate notifications regarding the fees owed, if any, and other information in due course from OPAP.

Petitioner may find it beneficial to view Private PAIR within a fortnight of the present decision to ensure that the withdrawal of the holding of abandonment has been acknowledged by OPAP in response to this decision. It is noted that all inquiries with regard to any failure of that change in status should be directed to OPAP where that change of status must be effected - the Office of Petitions cannot effectuate a change of status.

The general phone number for OPAP is 571-272-4000. Telephone inquiries regarding this decision should be directed to the undersigned at (571) 272-3225.[1]

/Paul Shanoski/
Paul Shanoski
Senior Attorney
Office of Petitions

1 Petitioner will note that all practice before the Office should be in writing, and the action of the Office will be based exclusively on the written record in the Office. See 37 C.F.R. § 1.2. As such, Petitioner is reminded that no telephone discussion may be controlling or considered authority for any further action(s) of Petitioner.

UNITED STATES PATENT AND TRADEMARK OFFICE

Commissioner for Patents
United States Patent and Trademark Office
P.O. Box 1450
Alexandria, VA 22313-1450
www.uspto.gov

FISH & RICHARDSON P.C.
P.O. BOX 1022
MINNEAPOLIS MN 55440-1022

MAILED
APR 06 2011
OFFICE OF PETITIONS

In re Application of	:	
Zhi-Liang Chu, et al.	:	
Application No. 12/610,877	:	DECISION GRANTING PETITION
Filed: November 2, 2009	:	UNDER 37 CFR 1.313(c)(2)
Attorney Docket No. 22578-0012009 / 107.US12.	:	

This is a decision on the petition under 37 CFR 1.313(c)(2), filed, April 5, 2011 to withdraw the above-identified application from issue after payment of the issue fee.

The petition is **GRANTED**.

The above-identified application is withdrawn from issue for consideration of a submission under 37 CFR 1.114 (request for continued examination). *See* 37 CFR 1.313(c)(2).

Petitioner is advised that the issue fee paid on March 1, 2011 cannot be refunded. If, however, this application is again allowed, petitioner may request that it be applied towards the issue fee required by the new Notice of Allowance.[1]

Telephone inquiries should be directed to Terri Johnson at (571) 272-2991.

This application is being referred to Technology Center AU 1654 for processing of the request for continued examination under 37 CFR 1.114 and for consideration of the concurrently filed information disclosure statement.

/Terri Johnson/
Terri Johnson
Petitions Examiner
Office of Petitions

---

[1] *The request to apply the issue fee to the new Notice may be satisfied by completing and returning the new Part B – Fee(s) Transmittal Form (along with any balance due at the time of submission). Petitioner is advised that the Issue Fee Transmittal Form* ***must*** *be completed and timely submitted to avoid abandonment of the application.*

SPE RESPONSE FOR CERTIFICATE OF CORRECTION

Paper No.: _____

DATE : 10/18/11

TO SPE OF : ART UNIT: 1654

SUBJECT : Request for Certificate of Correction for Appl. No.: 12/610,877 Patent No. 8,022,034

CofC mailroom date 10/3/11

Please respond to this request for a certificate of correction within 7 days.

FOR IFW FILES:

Please review the requested changes/corrections as shown in the **COCIN** document(s) in the IFW application image. No new matter should be introduced, nor should the scope or meaning of the claims be changed.

Please complete the response (see below) and forward the completed response to scanning using document code **COCX**.

FOR PAPER FILES:

Please review the requested changes/corrections as shown in the attached certificate of correction. Please complete this form (see below) and forward it with the file to:

Certificates of Correction Branch (CofC)
Randolph Square – 9D10-A
Palm Location 7580

Ernest C. White, LIE

Certificates of Correction Branch

703-756-1814 _____

Thank You For Your Assistance

The request for issuing the above-identified correction(s) is hereby:

Note your decision on the appropriate box.

- ☒ **Approved** — **All** changes apply.
- ☐ **Approved in Part** — Specify below which changes **do not** apply.
- ☐ **Denied** — State the reasons for denial below.

Comments: _____

_____

_____

_____

_____ **SPE** 1654 **Art Unit**

UNITED STATES PATENT AND TRADEMARK OFFICE

Commissioner for Patents
United States Patent and Trademark Office
P.O. Box 1450
Alexandria, VA 22313-1450
www.uspto.gov

FAY SHARPE LLP
1228 Euclid Avenue, 5th Floor
The Halle Building
Cleveland OH 44115

MAILED
NOV 22 2010
OFFICE OF PETITIONS

In re Application of
Mullick, et al.
Application No.: 12/610,889
Filed: November 2, 2009
Attorney Docket No: **MCKZ 200003US01**

: ON PETITION

This is in response to the petition under 37 CFR 1.137(b) filed September 13, 2010.

The renewed petition under 37 CFR 1.137(b) is **granted**.

This application became abandoned for failure to respond in a timely manner to the Notice to File Missing Parts of Non-Provisional Application mailed November 17, 2009. The notice set a shortened period for reply of two-months from its mailing date. Extensions of time were available pursuant to 37 CFR 1.136(a). A complete and timely response was not received and the application became abandoned on May 18, 2010. A Notice of Abandonment was mailed on July 9, 2010.

The replacement drawings are noted as having been received on June 28, 2010.

This application is being forwarded to the Office of Patent Application Processing for further processing.

Telephone inquiries regarding this decision should be directed to the undersigned at (571) 272-3222.

/Kenya A. McLaughlin/

Kenya A. McLaughlin
Petitions Attorney
Office of Petitions

UNITED STATES PATENT AND TRADEMARK OFFICE

Commissioner for Patents
United States Patent and Trademark Office
P.O. Box 1450
Alexandria, VA 22313-1450
www.uspto.go

HONEYWELL/HRFM
PATENT SERVICES
101 COLUMBIA ROAD
P.O. BOX 2245
MORRISTOWN, NJ 07962

MAILED
OCT 28 2011
OFFICE OF PETITIONS

In re Application of
Ynjiun P. Wang et al
Application No. 12/610,892
Filed: November 2, 2009
Attorney Docket No. H28130

DECISION GRANTING PETITION
UNDER 37 CFR 1.313(c)(2)

This is a decision on the petition under 37 CFR 1.313(c)(2), filed, October 27, 2011 to withdraw the above-identified application from issue after payment of the issue fee.

The petition is **GRANTED**.

The above-identified application is withdrawn from issue for consideration of a submission under 37 CFR 1.114 (request for continued examination). *See* 37 CFR 1.313(c)(2).

Petitioner is advised that the issue fee paid on September 15, 2011 in the above-identified application cannot be refunded. If, however, the above-identified application is again allowed, petitioner may request that it be applied towards the issue fee required by the new Notice of Allowance.[1]

The file does not indicate a change of address has been submitted, although the address given on the petition differs from the address of record. If appropriate, a change of address should be filed in accordance with MPEP 601.03. A courtesy copy of this decision is being mailed to the address given on the petition; however, the Office will mail all future correspondence solely to the address of record.

Telephone inquiries should be directed to Irvin Dingle at (571) 272-3210.

[1] The request to apply the issue fee to the new Notice may be satisfied by completing and returning the new Issue Fee Transmittal Form PTOL-85(b), which includes the following language thereon: Commissioner for Patents is requested to apply the Issue Fee and Publication Fee (if any) or re-apply any previously paid issue fee to the application identified above. Petitioner is advised that, whether a fee is indicated as being due or not, the Issue Fee Transmittal Form must be completed and timely submitted to avoid abandonment. Note the language in bold text on the first page of the Notice of Allowance and Fee(s) Due (PTOL-85).

This matter is being referred to Technology Center AU 2876 for processing of the request for continued examination under 37 CFR 1.114 and for consideration of the concurrently filed Information Disclosure Statement.

/Irvin Dingle/
Irvin Dingle
Petitions Examiner
Office of Petitions

cc: Heslin Rothenberg Farley & Mesiti P.C.
5 Columbia Circle
Albany, NY 12203

SPE RESPONSE FOR CERTIFICATE OF CORRECTION

Paper No.: _____

DATE : 3/15/11

TO SPE OF : ART UNIT 2891

SUBJECT : Request for Certificate of Correction for Appl. No.: 12/610900 Patent No.: 7821119

CofC mailroom date: 11/08/10

Please respond to this request for a certificate of correction within 7 days.

FOR IFW FILES:

Please review the requested changes/corrections as shown in the **COCIN** document(s) in the IFW application image. No new matter should be introduced, nor should the scope or meaning of the claims be changed.

Please complete the response (see below) and forward the completed response to scanning using document code **COCX**.

FOR PAPER FILES:

Please review the requested changes/corrections as shown in the attached certificate of correction. Please complete this form (see below) and forward it with the file to:

Certificates of Correction Branch (CofC)
Randolph Square – 9D10-A
Palm Location 7580
You can fax the Directors/SPE response to 571-270-9990

Lamonte Newsome

Certificates of Correction Branch

571-272-3421

Thank You For Your Assistance

The request for issuing the above-identified correction(s) is hereby:
Note your decision on the appropriate box.

- ☑ **Approved** — **All** changes apply.
- ☐ **Approved in Part** — Specify below which changes **do not** apply.
- ☐ **Denied** — State the reasons for denial below.

Comments: _____

K Bryant 2891
SPE Art Unit

UNITED STATES PATENT AND TRADEMARK OFFICE

Commissioner for Patents
United States Patent and Trademark Office
P.O. Box 1450
Alexandria, VA 22313-1450
www.uspto.gov

HOLLAND & KNIGHT LLP
10 ST. JAMES AVENUE
BOSTON MA 02116-3889

MAILED

DEC 06 2010

OFFICE OF PETITIONS

In re Application of	:	
Mark Moskovitz et al	:	
Application No. 12/610,911	:	DECISION ON PETITION
Filed: November 2, 2009	:	TO WITHDRAW
Attorney Docket No. 104168.00028	:	FROM RECORD

This is a decision on the Request to Withdraw as attorney or agent of record under 37 C.F.R. § 1.36(b), filed November 9, 2010.

The request is **APPROVED**.

A grantable request to withdraw as attorney/agent of record must be signed by every attorney/agent seeking to withdraw or contain a clear indication that one attorney is signing on behalf of another/others. A request to withdraw will not be approved unless at least 30 (thirty) days would remain between the date of approval and the later of the expiration date of a time to file a response or the expiration date of the maximum time period which can be extended under 37 C.F.R. § 1.136(a).

The request was signed by Elizabeth R. Burkhard on behalf of all attorneys/agents associated with customer number 54975. All attorneys/agents associated with customer number 54975 have been withdrawn.

The correspondence address has been changed and is copied below.

Telephone inquiries concerning this decision should be directed to Kimberly Inabinet at 571-272-4618.

/Kimberly Inabinet/

Kimberly Inabinet
Petitions Examiner
Office of Petitions

cc: Dr. Mark Moskovitz
Dynamic Adsorbents, Inc
3280 Peachtree Corners Circle
Ste. E
Norcross, GA 30092

UNITED STATES PATENT AND TRADEMARK OFFICE

UNITED STATES DEPARTMENT OF COMMERCE
United States Patent and Trademark Office
Address: COMMISSIONER FOR PATENTS
P.O. Box 1450
Alexandria, Virginia 22313-1450
www.uspto.gov

APPLICATION NUMBER	FILING OR 371(C) DATE	FIRST NAMED APPLICANT	ATTY. DOCKET NO./TITLE
12/610,911	11/02/2009	Mark Moskovitz	104168.00028

CONFIRMATION NO. 1407

54975
HOLLAND & KNIGHT LLP
10 ST. JAMES AVENUE
BOSTON, MA 02116-3889

POWER OF ATTORNEY NOTICE

OC000000044825234

Date Mailed: 12/06/2010

NOTICE REGARDING CHANGE OF POWER OF ATTORNEY

This is in response to the Power of Attorney filed 11/09/2010.

- The withdrawal as attorney in this application has been accepted. Future correspondence will be mailed to the new address of record. 37 CFR 1.33.

/kainabinet/

Office of Data Management, Application Assistance Unit (571) 272-4000, or (571) 272-4200, or 1-888-786-0101

UNITED STATES PATENT AND TRADEMARK OFFICE

Commissioner for Patents
United States Patent and Trademark Office
P.O. Box 1450
Alexandria, VA 22313-1450
www.uspto.gov

KLEMCHUK KUBASTA LLP
8150 N CENTRAL EXPRESSWAY
SUITE 1150
DALLAS, TX 75206

MAILED

DEC 17 2010

OFFICE OF PETITIONS

In re Application of	:	
Jimenez et al.	:	DECISION ON PETITION
Application No. 12/610,995	:	TO WITHDRAW
Filed: November 2, 2009	:	FROM RECORD
Attorney Docket No. 1042.0002	:	

This is a decision on the Request to Withdraw as attorney or agent of record under 37 C.F.R. § 1.36(b), filed November 5, 2010.

The request is **APPROVED**.

A grantable request to withdraw as attorney/agent of record must be signed by every attorney/agent seeking to withdraw or contain a clear indication that one attorney is signing on behalf of another/others. The Office will require the practitioner(s) to certify that he, she or they have: (1) given reasonable notice to the client, prior to the expiration of the reply period, which the practitioner(s) intends to withdraw from employment; (2) delivered to the client or a duly authorized representative of the client all papers and property (including funds) to which the client is entitled; and (3) notified the client of any replies that may be due and the time frame within which the client must respond, pursuant to 37 CFR 10.40 (c).

The request was signed by Darin M. Klemchuk, on behalf of the practitioners of record associated with Customer No. 41804.

Customer No. 41804 has been withdrawn as from record. Applicant is reminded that there is no attorney of record at this time.

The correspondence address of record has been changed and the new correspondence address is the address indicated below.

There is an outstanding Office action mailed September 29, 2010 that requires a reply from the applicant.

Telephone inquires concerning this decision should be directed to the undersigned at (571) 272-6059. All other inquires concerning either the examination or status of the application should be directed to the Technology Center.

A. Kelley

Alicia Kelley
Petitions Examiner
Office of Petitions

cc: DENIS JIMENEZ
1303 PUMPKIN CENTER RD.
MARSHALL, TX 75672

UNITED STATES PATENT AND TRADEMARK OFFICE

UNITED STATES DEPARTMENT OF COMMERCE
United States Patent and Trademark Office
Address: COMMISSIONER FOR PATENTS
P.O. Box 1450
Alexandria, Virginia 22313-1450
www.uspto.gov

APPLICATION NUMBER	FILING OR 371(C) DATE	FIRST NAMED APPLICANT	ATTY. DOCKET NO./TITLE
12/610,995	11/02/2009	Denis Jimenez	1042.0002

CONFIRMATION NO. 1579

POWER OF ATTORNEY NOTICE

41804
Klemchuk Kubasta LLP
8150 N Central Expressway
SUITE 1150
DALLAS, TX 75206

OC000000044988392

Date Mailed: 12/16/2010

NOTICE REGARDING CHANGE OF POWER OF ATTORNEY

This is in response to the Power of Attorney filed 11/05/2010.

- The withdrawal as attorney in this application has been accepted. Future correspondence will be mailed to the new address of record. 37 CFR 1.33.

/atkelley/

Office of Data Management, Application Assistance Unit (571) 272-4000, or (571) 272-4200, or 1-888-786-0101

UNITED STATES PATENT AND TRADEMARK OFFICE

Commissioner for Patents
United States Patent and Trademark Office
P.O. Box 1450
Alexandria, VA 22313-1450
www.uspto.gov

FISH & RICHARDSON P.C. (SV)
PO BOX 1022
MINNEAPOLIS MN 55440-1022

MAILED
FEB 14 2012
OFFICE OF PETITIONS

In re Application
Wu
Application No. 12/611,018
Filing or 371(c) Date: November 2, 2009
Dkt. No.: 22930-0020001

: PATENT TERM ADJUSTMENT

This is in response to the application for patent term adjustment under 37 CFR 1.705(b), filed January 30, 2012.

The application for patent term adjustment is **DISMISSED**.

Applicant submits that the correct patent term adjustment to be indicated on the patent is 44 days, not 18 days as calculated by the Office as of the mailing of the initial determination of patent term adjustment. Applicant contests the reduction of 26 days in connection with the information disclosure statement (IDS) filed July 18, 2011. In this regard, applicant asserts state:

> "Applicant filed an Information Disclosure Statement (IDS) on July 18, 2011, subsequent to a reply filed on June 22, 2011. Applicant was accorded a delay of 26 days for a supplemental response. The IDS filed on this date was in compliance with 37 C.F.R. 1.704(d) as it was accompanied by a statement that each item of information was first cited in a communication from a foreign patent office in a counterpart application, was compliant with 37 C.F.R. §§ 1.97 and 1.98, and was filed within 30 days of receipt of the communication. As such, Applicant respectfully submits that the IDS should not have been considered a supplemental filing under 37 C.F.R. § 1.704(c)(8), and requests the Applicant Delay associated with the filing of the IDS be decreased from 26 days to 0 days. See 37 C.F.R. § 1.704(c)(8) and § 1.704(d)."

Applicants' arguments have been carefully reviewed, but are not found persuasive. A review of the record reveals that the statement included with the IDS filed July 18, 2011 failed to comply with the requirements of 37 CFR 1.704(d)(1).

In this regard, 37 CFR 1.704(d) was amended December 1, 2011 to state as follows:

> **§ 1.704 Reduction of period of adjustment of patent term**
>
> (d)(1) A paper containing only an information disclosure statement in compliance with §§ 1.97 and 1.98 will not be considered a failure to engage in reasonable efforts to conclude

> prosecution (processing or examination) of the application under paragraphs (c)(6), (c)(8), (c)(9), or (c)(10) of this section **if it is accompanied by a statement that each item of information contained in the information disclosure statement**:
>
> (i) Was first cited in any communication from a patent office in a counterpart foreign or international application or from the Office, and this communication was not received by any individual designated in § 1.56(c) more than **thirty days** prior to the filing of the information disclosure statement; or
>
> (ii) Is a communication that was issued by a patent office in a counterpart foreign or international application or by the Office, and this communication was not received by any individual designated in § 1.56(c) more than **thirty days** prior to the filing of the information disclosure statement.
>
> (2) The thirty-day period set forth in paragraph (d)(1) of this section is not extendable.

(Emphasis added.)

Prior to December 1, 2011, 37 CFR 1.704(d) stated:

> (d)A paper containing only an information disclosure statement in compliance with §§ 1.97 and 1.98 will not be considered a failure to engage in reasonable efforts to conclude prosecution (processing or examination) of the application under paragraphs (c)(6), (c)(8), (c)(9), or (c)(10) of this section if it is accompanied by a statement that each item of information contained in the information disclosure statement was first cited in any communication from a foreign patent office in a counterpart application and that this communication was not received by any individual designated in § 1.56(c) more than **thirty days** prior to the filing of the information disclosure statement. This thirty-day period is not extendable.

(Emphasis added.)

The IDS filed July 18, 2011 does not comply with statement requirements set forth at 37 CFR 1.704(d) as the transmittal letter accompanying the information disclosure statement states:

> This statement is being filed after a first Office action on the merits, but before receipt of a final Office action or a Notice of Allowance. I, the undersigned, hereby certify that each item of information contained in this statement was first cited in a communication from a foreign patent office in a counterpart foreign application, the communication being dated July 1, 2011, which is not more than three months prior to the filing of this statement.

In view thereof, no adjustment to the patent term set forth in the Notice of Allowance will be made.

Receipt is hereby acknowledged of the required patent term adjustment application fee under 37 CFR 1.705(b) of $200.00. See, 37 CFR 1.18(e).

The application file is being forwarded to the Office of Data Management for issuance of the patent. The patent term adjustment indicated on the patent (as shown on the Issue Notification mailed about three weeks prior to patent issuance) will include any additional adjustment accrued both for Office delay in issuing the patent more than four months after payment of the issue fee and satisfaction of all outstanding requirements, and for the Office taking in excess of three years to issue the patent (to the extent that the three-year period does not overlap with periods already accorded).

Telephone inquiries specific to this decision should be directed to the undersigned at (571) 272-3205.

/ALESIA M. BROWN/

Alesia M. Brown
Attorney Advisor
Office of Petitions

PTO/SB/20PCT-KR (06-10)
Approved for use through 01/31/2012. OMB 0651-0058
U.S. Patent and Trademark Office; U. S. DEPARTMENT OF COMMERCE
Under the Paperwork Reduction Act of 1995, no persons are required to respond to a collection of information unless it displays a valid OMB control number.

REQUEST FOR PARTICIPATION IN THE PATENT COOPERATION TREATY - PATENT PROSECUTION HIGHWAY (PCT-PPH) PILOT PROGRAM BETWEEN THE KOREAN INTELLECTUAL PROPERTY OFFICE (KIPO) AND THE USPTO

Application No:	12/611,023	Filing date:	November 2, 2009
First Named Inventor:	Richard J. Young		
Title of the Invention:	MEASUREMENT AND ENDPOINTING OF SAMPLE THICKNESS		

THIS REQUEST FOR PARTICIPATION IN THE PCT-PPH PILOT PROGRAM ALONG WITH THE REQUIRED DOCUMENTS MUST BE SUBMITTED VIA EFS-WEB. INFORMATION REGARDING EFS-WEB IS AVAILABLE AT HTTP://WWW.USPTO.GOV/EBC/EFS_HELP.HTML

APPLICANT HEREBY REQUESTS PARTICIPATION IN THE PCT-PPH PROGRAM AND PETITIONS TO MAKE THE ABOVE-IDENTIFIED APPLICATION SPECIAL UNDER THE PCT-PPH PROGRAM.

The above-identified application is (1) a national stage entry of the corresponding PCT application, or (2) a national stage entry of another PCT application which claims priority to the corresponding PCT application, or (3) a national application that claims domestic/ foreign priority to the corresponding PCT application, or (4) a national application which forms the basis for the priority claim in the corresponding PCT application, or (5) a continuing application of a U.S. application that satisfies one of (1) to (4) above, or (6) a U.S. application that claims domestic benefit to a U.S. provisional application which forms the basis for the priority claim in the corresponding PCT application.

The corresponding PCT application number(s) is/are: PCT/US2009/063007

The international date of the corresponding PCT application(s) is/are: November 2, 2009

I. List of Required Documents:

a. **A copy of the latest international work product (WO/ISA, WO/IPEA, or IPER) in the above–identified corresponding PCT application(s)**

☐ Is attached.

☒ Is not attached because the document is already in the U.S. application.

b. **A copy of all claims which were indicated as having novelty, inventive step and industrial applicability in the above-identified corresponding PCT application(s).**

☐ Is attached.

☒ Is not attached because the document is already in the U.S. application.

c. **English translations of the documents in a. and b. above are attached (if the documents are not in the English language). A statement that the English translation is accurate is attached for the document in b. above.**

This collection of information is required by 35 U.S.C. 119, 37 CFR 1.55, and 37 CFR 1.102(d). The information is required to obtain or retain a benefit by the public, which is to file (and by the USPTO to process) an application. Confidentiality is governed by 35 U.S.C. 122 and 37 CFR 1.11 and 1.14. This collection is estimated to take 2 hours to complete, including gathering, preparing, and submitting the completed application form to the USPTO. Time will vary depending upon the individual case. Any comments on the amount of time you require to complete this form and/or suggestions for reducing this burden should be sent to the Chief Information Officer, U.S. Patent and Trademark Office, U.S. Department of Commerce, P.O. Box 1450, Alexandria, VA 22313-1450. DO NOT SEND FEES OR COMPLETED FORMS TO THIS ADDRESS.

Approved for use through 01/31/2012. OMB 0651-0058
U.S.Patent and Trademark Office; U.S. DEPARTMENT OF COMMERCE

Under the Paperwork Reduction Act of 1995, no persons are required to respond to a collection of information unless it displays a valid OMB control number.

REQUEST FOR PARTICIPATION IN THE PCT-PPH PILOT PROGRAM BETWEEN THE KIPO AND THE USPTO

(continued)

Application No.:	12/611,023
First Named Inventor:	Richard J. Young

d. **(1) An information disclosure statement listing the documents cited in the international work products (ISR, WO/ISA, WO/IPEA, IPER) of the corresponding PCT application.**

☐ Is attached

☒ Has already been filed in the above-identified U.S. application on June 16, 2010

(2) Copies of all documents (except) for U.S. patents or U.S. patent application publications)

☐ Are attached.

Have already been filed in the above-identified U.S. application on June 16, 2010

II. Claims Correspondence Table:

Claims in US Application	Patentable Claims in the corresponding PCT Application	Explanation regarding the correspondence
1-4	1-4	Original
5-14	5-14	Multiple dependency in US claims have been deleted
15	15	Original
16	16	Multiple dependency deleted; the word 'image' has been added
17	17	Original
18	18	Multiple dependency in US claims have been deleted
19-21	19-21	Original
22	22	Multiple dependency in US claims have been deleted
23-35	23-35	Original
36-40	36-40	US Claims have been cancelled
41-42	41-42	Original
43-44	43-44	US Claims have been cancelled
45	45	Original
46	46	Multiple Dependency in US claims have been deleted

III. All the claims in the US application sufficiently correspond to the patentable claims in the corresponding PCT application.

Signature		Date	FEBRUARY 8, 2011
Name (Print/Typed)	DAVID GRINER	Registration Number	47,614

UNITED STATES PATENT AND TRADEMARK OFFICE

UNITED STATES DEPARTMENT OF COMMERCE
United States Patent and Trademark Office
Address: COMMISSIONER FOR PATENTS
P.O. Box 1450
Alexandria, Virginia 22313-1450
www.uspto.gov

APPLICATION NO.	FILING DATE	FIRST NAMED INVENTOR	ATTORNEY DOCKET NO.	CONFIRMATION NO.
12/611,023	11/02/2009	Richard J. Young	F681	1636

25784 7590 03/08/2011
MICHAEL O. SCHEINBERG
P.O. BOX 164140
AUSTIN, TX 78716-4140

EXAMINER

ART UNIT	PAPER NUMBER
2884	

MAIL DATE	DELIVERY MODE
03/08/2011	PAPER

Please find below and/or attached an Office communication concerning this application or proceeding.

The time period for reply, if any, is set in the attached communication.

UNITED STATES PATENT AND TRADEMARK OFFICE

Commissioner for Patents
United States Patent and Trademark Office
P.O. Box 1450
Alexandria, VA 22313-1450
www.uspto.gov

MICHAEL O. SCHEINBERG
P.O. BOX 164140
AUSTIN TX 78716-4140

In re Application of	
Young et al.	**: DECISION ON REQUEST TO**
Application No.: 12/611,023	**: PARTICIPATE IN THE PATENT**
Filed: 02 November 2009	**: PROSECUTION HIGHWAY**
Attorney Docket No.: F681	**: PROGRAM AND PETITION**
For: MEASUREMENT AND	**: TO MAKE SPECIAL UNDER**
ENDPOINTING OF SAMPLE	**: 37 CFR 1.102(a)**
THICKNESS	

This is a decision on the request to participate in the PCT Patent Prosecution Highway (PCT-PPH) pilot program and the petition under 37 CFR 1.102(a), filed 08 February 2011, to make the above-identified application special.

The request and petition are **DISMISSED**.

Discussion

A grantable request to participate in the PCT-PPH pilot program and petition to make special require:

(1) The U.S. application must have an eligible relationship to one or more PCT applications where the ISA or IPEA are the JPO, EPO, KIPO, or USPTO;

(2) At least one claim in the PCT application has novelty, inventive step, and industrial applicability and must be free of any observations in Box VIII in the latest work product in the international stage or applicant must identify and explain why the claim(s) is/are not subject to the observation in Box VIII;

(3) Applicant must submit a copy of the claim(s) from the PCT application(s) that have novelty, inventive step, and industrial applicability along with an English translation thereof and a statement that the English translation is accurate, if the claims are not in the English language;

(4) All the claims in the U.S. application must sufficiently correspond or be amended to sufficiently correspond to the claim(s) that have novelty, inventive step, and industrial applicability in the PCT application(s);

(5) Examination of the U.S. application has not begun;

(6) Applicant must submit a copy of the latest international work product from the PCT application indicating that the claim(s) have novelty, inventive step, and industrial applicability

along with an English translation thereof and a statement that the English translation is accurate if the latest international work product is not in the English language;

(7) Applicant must submit an IDS listing the documents cited by the PCT examiner in the international work product along with copies of documents except U.S. patents or U.S. patent application publications.

Requirements (1-6) above are considered to have been met. However, the request to participate in the PPH pilot program and petition fails meet requirement (7).

Regarding the requirement of condition (7), the PGPub documents cited by the PCT examiner in the international work product have not been cited on an IDS.

Regarding the requirement of condition (4), it should be noted that some of the claims listed on the correspondence table have been cancelled in the instant application.

Applicant is given **ONE** opportunity within a time period of **ONE MONTH or THIRTY DAYS**, whichever is longer, from the mailing date of this decision to correct the deficiencies. **NO EXTENSION OF TIME UNDER 37 CFR 1.136 IS PERMITTED.** If the deficiencies are not corrected with the time period given, the application will await action in its regular turn. Response must be filed via the Electronic Filing System (EFS) using the document description: Petition to make special under PCT – Patent Pros Hwy. Any preliminary amendments and IDS submitted with the PPH documents must be separately indexed as a preliminary amendment and IDS, respectively.

Telephone inquiries concerning this decision should be directed to Lee W. Young at 571-272-4549.

All other inquiries concerning the examination or status of the application is accessible in the PAIR system at http://www.uspto.gov/ebc/index.html.

Lee W. Young
TQAS Technology Center 2800 - Semiconductors,
Electrical & Optical Systems & Components

Attorney Docket No.: F681

IN THE UNITED STATES PATENT AND TRADEMARK OFFICE

APPLICATION NO.: 12/611,023 Confirmation No.: 1636

APPLICANT(S): Young et al.

FILING DATE: November 2, 2009

TITLE: Measurement and Endpointing of Lamella Thickness

Mail Stop Amendment
Commissioner for Patents
P.O. Box 1450
Alexandria, VA 22313-1450

RENEWED PETITION TO PARTICIPATE IN THE PATENT PROSECUTION HIGHWAY PROGRAM AND PETITION TO MAKE SPECIAL UNDER 37 CFR 1.102(a)

Applicants hereby submit a Renewed Petition to Participate in the Patent Prosecution Highway Program and Petition to Make Special Under 37 CFR 1.102(a) and an Information Disclosure Statement citing the references originally cited on the PCT Search Report and Written Opinion.

Applicants also wish it to confirm cancellation of claims 36-40 and 43-44 in the Preliminary Amendment filed January 18, 2010. No additional amendments are being submitted with this Request.

CERTIFICATE OF TRANSMISSION UNDER 37 C.F.R. 1.8

I hereby certify that this correspondence is being transmitted to the US Patent and Trademark Office:

On: March 15, 2011

By: Elizabeth Cubberley
Name: Elizabeth Cubberley
Telephone: (512) 637-0800

Applicants believe that no fees are due at this time. If the Commissioner determines that any additional fees or extensions are required, Applicants request that such extensions be granted and any fees be charged to Deposit Account 50-1635.

Respectfully submitted,

Date: 3/15/11

By: David Griner

David Griner
Patent Reg. 47,614
P.O. Box 164140
Austin, Texas 78716-4140
Telephone: (512) 328-9510
Facsimile: (512) 306-1963

Attorney Docket No.: F681

IN THE UNITED STATES PATENT AND TRADEMARK OFFICE

APPLICATION NO.: 12/611,023 Confirmation No.: 1636

APPLICANT(S): Young et al.

FILING DATE: November 2, 2009

TITLE: Measurement and Endpointing of Lamella Thickness

Mail Stop Amendment
Commissioner for Patents
P.O. Box 1450
Alexandria, VA 22313-1450

RENEWED PETITION TO PARTICIPATE IN THE PATENT PROSECUTION HIGHWAY PROGRAM AND PETITION TO MAKE SPECIAL UNDER 37 CFR 1.102(a)

For the Examiner's convenience, Applicants hereby submit a copy of the PCT Publication WO2010/051546 A2, which has claims identical to the claims pending in the US Application. All claims were indicated as having novelty, inventive step and industrial applicability in the corresponding PCT application.

Respectfully submitted,

Date: March 17, 2011

By: /david griner/
David Griner
Patent Reg. 47,614
P.O. Box 164140
Austin, Texas 78716-4140
Telephone: (512) 328-9510
Facsimile: (512) 306-1963

CERTIFICATE OF TRANSMISSION UNDER 37 C.F.R. 1.8

I hereby certify that this correspondence is being transmitted to the US Patent and Trademark Office:

On: March 17, 2011

By: /elizabeth cubberley/
Name: Elizabeth Cubberley
Telephone: (512) 637-0800

UNITED STATES PATENT AND TRADEMARK OFFICE

UNITED STATES DEPARTMENT OF COMMERCE
United States Patent and Trademark Office
Address: COMMISSIONER FOR PATENTS
P.O. Box 1450
Alexandria, Virginia 22313-1450
www.uspto.gov

APPLICATION NO.	FILING DATE	FIRST NAMED INVENTOR	ATTORNEY DOCKET NO.	CONFIRMATION NO.
12/611,023	11/02/2009	Richard J. Young	F681	1636

25784 7590 04/26/2011
MICHAEL O. SCHEINBERG
P.O. BOX 164140
AUSTIN, TX 78716-4140

EXAMINER

ART UNIT	PAPER NUMBER
2884	

MAIL DATE	DELIVERY MODE
04/26/2011	PAPER

Please find below and/or attached an Office communication concerning this application or proceeding.

The time period for reply, if any, is set in the attached communication.

UNITED STATES PATENT AND TRADEMARK OFFICE

Commissioner for Patents
United States Patent and Trademark Office
P.O. Box 1450
Alexandria, VA 22313-1450
www.uspto.gov

MICHAEL O. SCHEINBERG
P.O. BOX 164140
AUSTIN TX 78716-4140

In re Application of	
Young et al.	**: DECISION ON REQUEST TO**
Application No.: 12/611,023	**: PARTICIPATE IN THE PATENT**
Filed: 02 November 2009	**: PROSECUTION HIGHWAY**
Attorney Docket No.: F681	**: PROGRAM AND PETITION**
For: MEASUREMENT AND	**: TO MAKE SPECIAL UNDER**
ENDPOINTING OF SAMPLE	**: 37 CFR 1.102(a)**
THICKNESS	

This is a decision on the request to participate in the PCT Patent Prosecution Highway (PCT-PPH) pilot program and the petition under 37 CFR 1.102(a), filed 08 February 2011 and renewed on 15 March 2011, to make the above-identified application special.

The request and petition are **GRANTED**.

Discussion

A grantable request to participate in the PCT-PPH pilot program and petition to make special require:

(1) The U.S. application must have an eligible relationship to one or more PCT applications where the ISA or IPEA are the JPO, EPO, KIPO, or USPTO;

(2) At least one claim in the PCT application has novelty, inventive step, and industrial applicability and must be free of any observations in Box VIII in the latest work product in the international stage or applicant must identify and explain why the claim(s) is/are not subject to the observation in Box VIII;

(3) Applicant must submit a copy of the claim(s) from the PCT application(s) that have novelty, inventive step, and industrial applicability along with an English translation thereof and a statement that the English translation is accurate, if the claims are not in the English language;

(4) All the claims in the U.S. application must sufficiently correspond or be amended to sufficiently correspond to the claim(s) that have novelty, inventive step, and industrial applicability in the PCT application(s);

(5) Examination of the U.S. application has not begun;

(6) Applicant must submit a copy of the latest international work product from the PCT application indicating that the claim(s) have novelty, inventive step, and industrial applicability

along with an English translation thereof and a statement that the English translation is accurate if the latest international work product is not in the English language;

(7) Applicant must submit an IDS listing the documents cited by the PCT examiner in the international work product along with copies of documents except U.S. patents or U.S. patent application publications.

The request to participate in the PCT-PPH pilot program and petition comply with the above requirements. Accordingly, the above-identified application has been accorded "special" status.

Telephone inquiries concerning this decision should be directed to Lee W. Young at 571-272-4549.

All other inquiries concerning the examination or status of the application is accessible in the PAIR system at http://www.uspto.gov/ebc.index.html.

This application will be forwarded to the examiner for action on the merits commensurate with this decision once this application's formality reviews have been completed.

Lee W. Young
TQAS Technology Center 2800 - Semiconductors,
Electrical & Optical Systems & Components

UNITED STATES PATENT AND TRADEMARK OFFICE

UNITED STATES DEPARTMENT OF COMMERCE
United States Patent and Trademark Office
Address: COMMISSIONER FOR PATENTS
P.O. Box 1450
Alexandria, Virginia 22313-1450
www.uspto.gov

APPLICATION NO.	FILING DATE	FIRST NAMED INVENTOR	ATTORNEY DOCKET NO.	CONFIRMATION NO.
12/611,030	11/02/2009	Motohisa Araki	6639P820	1645

8791 7590 09/14/2010
BLAKELY SOKOLOFF TAYLOR & ZAFMAN LLP
1279 OAKMEAD PARKWAY
SUNNYVALE, CA 94085-4040

EXAMINER

ART UNIT	PAPER NUMBER
2468	

MAIL DATE	DELIVERY MODE
09/14/2010	PAPER

Please find below and/or attached an Office communication concerning this application or proceeding.

The time period for reply, if any, is set in the attached communication.

UNITED STATES PATENT AND TRADEMARK OFFICE

Commissioner for Patents
United States Patent and Trademark Office
P.O. Box 1450
Alexandria, VA 22313-1450
www.uspto.gov

BLAKELY SOKOLOFF TAYLOR & ZAFMAN LLP
1279 OAKMEAD PARKWAY
SUNNYVALE CA 94085-4040

In re Application of: ARAKI, MOTOHISA
Application No. 12/611,030
Filed: November 02, 2009
For: SERVER APPARATUS AND TERMINAL APPARATUS

DECISION ON REQUEST TO PARTICIPATE IN PATENT PROSECUTION HIGHWAY PILOT PROGRAM AND PETITION TO MAKE SPECIAL UNDER 37 CFR 1.102(d)

MAILED

SEP 14 2010

DIRECTOR OFFICE
TECHNOLOGY CENTER 2400

This is a decision on the request to participate in the Patent Prosecution Highway (PPH) program and the petition under 37 CFR 1.102(d), filed August 20, 2010, to make the above-identified application special.

The petition is **GRANTED.**

A grantable request to participate in the PPH pilot program and petition to make special require:

(1) The U.S. application must validly claim priority under 35 U.S.C. 119(a) to one or more applications filed in the JPO;

(2) Applicant must submit a copy of the allowable/patentable claim(s) from the JPO application(s) along with an English translation thereof and a statement that the English translation is accurate;

(3) All the claims in the U.S. application must sufficiently correspond or be amended to sufficiently correspond to the allowable/patentable claim(s) in the JPO application(s);

(4) Examination of the U.S. application has not begun;

(5) Applicant must submit a copy of all the office actions from each of the JPO application(s) containing the allowable/patentable claim(s) along with an English translation thereof and a statement that the English translation is accurate;

(6) Applicant must submit an IDS listing the documents cited by the JPO examiner in the KIPO office action along with copies of documents except U.S. patents or U.S. patent application publications; and

(7) The required petition fee under 37 CFR 1.17(h).

In view of the revised claim correspondence table and Applicant's comments as well as the submission of the IDS reference in the decision on the original request, the renewed request to participate in the PPH program and petition are now found to comply with the above requirements. Accordingly, the above-identified application has been accorded "special" status.

Telephone inquiries concerning this decision should be directed to Chau Nguyen at 571-272-3126

All other inquiries concerning the examination or status of the application is accessible in the PAIR system at http://www.uspto.gov/ebc/index.html.

The application is being forwarded to the examiner for action on the merits commensurate with this decision.

/Chau Nguyen/

Chau Nguyen, Quality Assurance Specialist
Technology Center 2400

UNITED STATES PATENT AND TRADEMARK OFFICE

Commissioner for Patents
United States Patent and Trademark Office
P.O. Box 1450
Alexandria, VA 22313-1450
www.uspto.gov

Pepper/Millenniata
50th Floor
500 Grant Street
Pittsburgh PA 15219-2502

MAILED

APR 20 2011

OFFICE OF PETITIONS

In re Application of	:	
Douglas P. Hansen et al.	:	
Application No. 12/611,039	:	DECISION ON PETITION
Filed: November 2, 2009	:	TO WITHDRAW
Attorney Docket No. ML.009.NPUS00	:	FROM RECORD
	:	

This is a decision on the Request to Withdraw as attorney or agent of record under 37 C.F.R. § 1.36(b), filed March 10, 2011.

The request is **APPROVED**.

A grantable request to withdraw as attorney/agent of record must be signed by every attorney/agent seeking to withdraw or contain a clear indication that one attorney is signing on behalf of another/others. A request to withdraw will not be approved unless at least 30 (thirty) days would remain between the date of approval and the later of the expiration date of a time to file a response or the expiration date of the maximum time period which can be extended under 37 C.F.R. § 1.136(a).

The request was signed by Joseph T. Helmsen on behalf of attorneys/agents associated with customer number 89485. All attorneys/agents associated with customer number 89485 been withdrawn.

The correspondence address has been changed and is copied below.

Telephone inquiries concerning this decision should be directed to Kimberly Inabinet at 571-272-4618.

/Kimberly Inabinet/

Kimberly Inabinet
Petitions Examiner
Office of Petitions

cc: Brigham Young University
3760 HBLL, Technology Transfer Office
Provo, UT 84602-6844

UNITED STATES PATENT AND TRADEMARK OFFICE

UNITED STATES DEPARTMENT OF COMMERCE
United States Patent and Trademark Office
Address: COMMISSIONER FOR PATENTS
P.O. Box 1450
Alexandria, Virginia 22313-1450
www.uspto.gov

APPLICATION NUMBER	FILING OR 371(C) DATE	FIRST NAMED APPLICANT	ATTY. DOCKET NO./TITLE
12/611,039	11/02/2009	Douglas P. Hansen	ML.009.NPUS00

CONFIRMATION NO. 1663

POWER OF ATTORNEY NOTICE

89485
Pepper/Millenniata
50th Floor
500 Grant Street
Pttsburgh, PA 15219-2502

OC000000047225003

Date Mailed: 04/19/2011

NOTICE REGARDING CHANGE OF POWER OF ATTORNEY

This is in response to the Power of Attorney filed 03/10/2011.

- The withdrawal as attorney in this application has been accepted. Future correspondence will be mailed to the new address of record. 37 CFR 1.33.

/kainabinet/

Office of Data Management, Application Assistance Unit (571) 272-4000, or (571) 272-4200, or 1-888-786-0101

UNITED STATES PATENT AND TRADEMARK OFFICE

Commissioner for Patents
United States Patent and Trademark Office
P.O. Box 1450
Alexandria, VA 22313-1450
www.uspto.gov

WORKMAN NYDEGGER
1000 EAGLE GATE TOWER
60 EAST SOUTH TEMPLE
SALT LAKE CITY UT 84111

MAILED
SEP 02 2010
OFFICE OF PETITIONS

In re Application of	:	
Seolas et al.	:	
Application No. 12/611,056	:	DECISION ON PETITION
Filed: November 2, 2009	:	
Attorney Docket No. 17741.1.1	:	

This is a decision on the petition under the unintentional provisions of 37 CFR 1.137(b), filed July 7, 2010, to revive the above-identified application.

The petition is **GRANTED**.

The above-identified application became abandoned for failure to reply in a proper and timely manner to the Notice to File Missing Parts of Nonprovisional Application (Notice) mailed November 19, 2009. The Notice set a period for reply of two (2) months from the mail date of the Notice. A five-month extension of time under the provisions of 37 CFR 1.136(a) was timely obtained. Accordingly, the above-identified application became abandoned on June 20, 2010. A Notice of Abandonment was mailed on June 30, 2010.

The petition satisfies the requirements of 37 CFR 1.137(b) in that petitioner has supplied (1) a substitute Specification, (2) the petition fee of $810.00, and (3) a proper statement of unintentional delay.

Telephone inquiries concerning this decision should be directed to the undersigned at (571) 272-7751.

This application is being referred to the Office of Patent Application Processing for further processing in accordance with this decision on petition.

Joan Olszewski
Petitions Examiner
Office of Petitions

UNITED STATES PATENT AND TRADEMARK OFFICE

Commissioner for Patents
United States Patent and Trademark Office
P.O. Box 1450
Alexandria, VA 22313-1450
www.uspto.gov

WORKMAN NYDEGGER
1000 EAGLE GATE TOWER
60 EAST SOUTH TEMPLE
SALT LAKE CITY, UT 84111

MAILED

OCT 25 2010

OFFICE OF PETITIONS

In re Application of	:	
Seolas et al.	:	
Application No. 12/611,058	:	ON PETITION
Filed: November 2, 2009	:	
Attorney Docket No. 17741.2.1	:	

This is a decision on the petition under the unintentional provisions of 37 CFR 1.137(b), filed August 3, 2010, to revive the above-identified application.

The petition is **DISMISSED**.

Any request for reconsideration of this decision must be submitted within TWO (2) MONTHS from the mail date of this decision. Extensions of time under 37 CFR 1.136(a) are permitted. The reconsideration request should include a cover letter entitled "Renewed Petition under 37 CFR 1.137(b)." This is **not** a final agency action within the meaning of 5 U.S.C. § 704.

The application became abandoned for failure to file a proper reply to the Notice to File Missing Parts of Nonprovisional Application, mailed November 19, 2009. The Notice set a period for reply of two (2) months from the mail date of the Notice. In view of the five (5) month extension of time, the application became abandoned on June 20, 2010. A Notice of Abandonment was mailed July 28, 2009.

A grantable petition under 37 CFR 1.137(b) must be accompanied by: (1) the required reply, unless previously filed, (2) the petition fee as set forth in 37 CFR 1.17(m), and (3) a statement that the entire delay in filing the required reply from the due date for the reply until the filing of a grantable petition pursuant to 37 CFR 1.137(b) was unintentional. Where there is a question as to whether either the abandonment or the delay in filing a petition under 37 CFR 1.137 was unintentional, the Director may require additional information. See MPEP 711.03(c)(II)(C) and (D).

The petition lacks item (1), the required reply. While the Office recognizes that the petitioner submitted a declaration on June 18, 2010. The declaration cannot be accepted since the fourth inventors' S-signature is not properly inserted between single forward slash marks, therefore leaving the declaration unsigned. See 37 CFR 1.4 (d)(2)(i).

Further correspondence with respect to this matter should be addressed as follows:

By Mail: Mail Stop PETITION
Commissioner for Patents
P. O. Box 1450
Alexandria, VA 22313-1450

By Hand: U. S. Patent and Trademark Office
Customer Service Window, Mail Stop Petitions
Randolph Building
401 Dulany Street
Alexandria, VA 22314

By Facsimile: **(571) 273-8300**

Telephone inquiries concerning this decision should be directed to the undersigned at (571) 272-6059.

A. Kelley

Alicia Kelley
Petitions Examiner
Office of Petitions

UNITED STATES PATENT AND TRADEMARK OFFICE

Commissioner for Patents
United States Patent and Trademark Office
P.O. Box 1450
Alexandria, VA 22313-1450
www.uspto.gov

WORKMAN NYDEGGER
1000 EAGLE GATE TOWER
60 EAST SOUTH TEMPLE
SALT LAKE CITY, UT 84111

MAILED

DEC 10 2010

OFFICE OF PETITIONS

In re Application of	:	
Seolas et al.	:	
Application No. 12/611,058	:	ON PETITION
Filed: November 2, 2009	:	
Attorney Docket No. 17741.2.1	:	

This is a decision on the renewed petition under the unintentional provisions of 37 CFR 1.137(b), filed November 2, 2010, to revive the above-identified application.

The petition is **GRANTED**.

The application became abandoned for failure to file a proper reply to the Notice to File Missing Parts of Nonprovisional Application, mailed November 19, 2009. The Notice set a period for reply of two (2) months from the mail date of the Notice. In view of the five (5) month extension of time, the application became abandoned on June 20, 2010. A Notice of Abandonment was mailed July 28, 2010.

The petition satisfies the requirements of 37 CFR 1.137(b) in that petitioner has supplied (1) the reply in the form of a declaration and surcharge of $65, (2) the petition fee of $810, and (3) a proper statement of unintentional delay.

This application file is being referred to the Office of Patent Application Processing (OPAP) for further pre-examination processing.

Telephone inquiries concerning this decision should be directed to the undersigned at (571) 272-6059. Telephone inquiries related to OPAP processing should be directed to their hotline at (271) 272-4000

A Kelley

Alicia Kelley
Petitions Examiner
Office of Petitions