Doc Code: PPH.PCT.652
Document Description: Petition to make special under PCT-Patent Pros Hwy

PTO/SB/20PCT-KR (06-10)
Approved for use through 01/31/2012. OMB 0651-0058
U.S. Patent and Trademark Office; U. S. DEPARTMENT OF COMMERCE
Under the Paperwork Reduction Act of 1995, no persons are required to respond to a collection of information unless it displays a valid OMB control number.

REQUEST FOR PARTICIPATION IN THE PATENT COOPERATION TREATY - PATENT PROSECUTION HIGHWAY (PCT-PPH) PILOT PROGRAM BETWEEN THE KOREAN INTELLECTUAL PROPERTY OFFICE (KIPO) AND THE USPTO

Application No:	12/611,061	Filing date:	November 2, 2009
First Named Inventor:	Andrew B. Carlson		
Title of the Invention:	Data Center With Low Power Usage Effectiveness		

THIS REQUEST FOR PARTICIPATION IN THE PCT-PPH PILOT PROGRAM ALONG WITH THE REQUIRED DOCUMENTS MUST BE SUBMITTED VIA EFS-WEB. INFORMATION REGARDING EFS-WEB IS AVAILABLE AT HTTP://WWW.USPTO.GOV/EBC/EFS_HELP.HTML

APPLICANT HEREBY REQUESTS PARTICIPATION IN THE PCT-PPH PROGRAM AND PETITIONS TO MAKE THE ABOVE-IDENTIFIED APPLICATION SPECIAL UNDER THE PCT-PPH PROGRAM.

The above-identified application is (1) a national stage entry of the corresponding PCT application, or (2) a national stage entry of another PCT application which claims priority to the corresponding PCT application, or (3) a national application that claims domestic/ foreign priority to the corresponding PCT application, or (4) a national application which forms the basis for the priority claim in the corresponding PCT application, or (5) a continuing application of a U.S. application that satisfies one of (1) to (4) above, or (6) a U.S. application that claims domestic benefit to a U.S. provisional application which forms the basis for the priority claim in the corresponding PCT application.

The corresponding PCT application number(s) is/are: PCT/US2010/055147

The international filing date of the corresponding PCT application(s) is/are: November 2, 2010

I. List of Required Documents:

a. **A copy of the latest international work product (WO/ISA, WO/IPEA, or IPER) in the above–identified corresponding PCT application(s)**

☐ Is attached.

☑ Is not attached because the document is already in the U.S. application.

b. **A copy of all claims which were indicated as having novelty, inventive step and industrial applicability in the above-identified corresponding PCT application(s).**

☑ Is attached.

☐ Is not attached because the document is already in the U.S. application.

c. **English translations of the documents in a. and b. above are attached (if the documents are not in the English language). A statement that the English translation is accurate is attached for the document in b. above.**

This collection of information is required by 35 U.S.C. 119, 37 CFR 1.55, and 37 CFR 1.102(d). The information is required to obtain or retain a benefit by the public, which is to file (and by the USPTO to process) an application. Confidentiality is governed by 35 U.S.C. 122 and 37 CFR 1.11 and 1.14. This collection is estimated to take 2 hours to complete, including gathering, preparing, and submitting the completed application form to the USPTO. Time will vary depending upon the individual case. Any comments on the amount of time you require to complete this form and/or suggestions for reducing this burden should be sent to the Chief Information Officer, U.S. Patent and Trademark Office, U.S. Department of Commerce, P.O. Box 1450, Alexandria, VA 22313-1450. DO NOT SEND FEES OR COMPLETED FORMS TO THIS ADDRESS.

REQUEST FOR PARTICIPATION IN THE PCT-PPH PILOT PROGRAM BETWEEN THE KIPO AND THE USPTO

(continued)

Application No.:	12/611,061
First Named Inventor:	Andrew B. Carlson

d. **(1) An information disclosure statement listing the documents cited in the international work products (ISR, WO/ISA, WO/IPEA, IPER) of the corresponding PCT application.**

☐ Is attached

☑ Has already been filed in the above-identified U.S. application on August 5, 2011

(2) Copies of all documents (except) for U.S. patents or U.S. patent application publications)

☐ Are attached.

☑ Have already been filed in the above-identified U.S. application on August 5, 2011

II. Claims Correspondence Table:

Claims in US Application	Patentable Claims in the corresponding PCT Application	Explanation regarding the correspondence
1-13	1-13	Claims 1-13 in US application have been canceled.
14-30	14-30	Claims 14-30 in US application substantially conform to
		(with minor amendments to correct antecedent basis errors)
		claims 14-30 in PCT/US2010/055147, indicated as patentable.
31-54		Claims 31-54 in US application, added by preliminary amendment filed herewith,
		are new and depend (directly or indirectly) from one of claims 14 or 23,
		indicated as patentable in PCT/US2010/055147.

III. All the claims in the US application sufficiently correspond to the patentable claims in the corresponding PCT application.

Signature /Matthew K. Wernli/	Date August 16, 2011
Name (Print/Typed) Matthew K. Wernli	Registration Number 63,173

Privacy Act Statement

The **Privacy Act of 1974 (P.L. 93-579)** requires that you be given certain information in connection with your submission of the attached form related to a patent application or patent. Accordingly, pursuant to the requirements of the Act, please be advised that: (1) the general authority for the collection of this information is 35 U.S.C. 2(b)(2); (2) furnishing of the information solicited is voluntary; and (3) the principal purpose for which the information is used by the U.S. Patent and Trademark Office is to process and/or examine your submission related to a patent application or patent. If you do not furnish the requested information, the U.S. Patent and Trademark Office may not be able to process and/or examine your submission, which may result in termination of proceedings or abandonment of the application or expiration of the patent.

The information provided by you in this form will be subject to the following routine uses:

1. The information on this form will be treated confidentially to the extent allowed under the Freedom of Information Act (5 U.S.C. 552) and the Privacy Act (5 U.S.C 552a). Records from this system of records may be disclosed to the Department of Justice to determine whether disclosure of these records is required by the Freedom of Information Act.
2. A record from this system of records may be disclosed, as a routine use, in the course of presenting evidence to a court, magistrate, or administrative tribunal, including disclosures to opposing counsel in the course of settlement negotiations.
3. A record in this system of records may be disclosed, as a routine use, to a Member of Congress submitting a request involving an individual, to whom the record pertains, when the individual has requested assistance from the Member with respect to the subject matter of the record.
4. A record in this system of records may be disclosed, as a routine use, to a contractor of the Agency having need for the information in order to perform a contract. Recipients of information shall be required to comply with the requirements of the Privacy Act of 1974, as amended, pursuant to 5 U.S.C. 552a(m).
5. A record related to an International Application filed under the Patent Cooperation Treaty in this system of records may be disclosed, as a routine use, to the International Bureau of the World Intellectual Property Organization, pursuant to the Patent Cooperation Treaty.
6. A record in this system of records may be disclosed, as a routine use, to another federal agency for purposes of National Security review (35 U.S.C. 181) and for review pursuant to the Atomic Energy Act (42 U.S.C. 218(c)).
7. A record from this system of records may be disclosed, as a routine use, to the Administrator, General Services, or his/her designee, during an inspection of records conducted by GSA as part of that agency's responsibility to recommend improvements in records management practices and programs, under authority of 44 U.S.C. 2904 and 2906. Such disclosure shall be made in accordance with the GSA regulations governing inspection of records for this purpose, and any other relevant (*i.e.*, GSA or Commerce) directive. Such disclosure shall not be used to make determinations about individuals.
8. A record from this system of records may be disclosed, as a routine use, to the public after either publication of the application pursuant to 35 U.S.C. 122(b) or issuance of a patent pursuant to 35 U.S.C. 151. Further, a record may be disclosed, subject to the limitations of 37 CFR 1.14, as a routine use, to the public if the record was filed in an application which became abandoned or in which the proceedings were terminated and which application is referenced by either a published application, an application open to public inspection or an issued patent.
9. A record from this system of records may be disclosed, as a routine use, to a Federal, State, or local law enforcement agency, if the USPTO becomes aware of a violation or potential violation of law or regulation.

(12) INTERNATIONAL APPLICATION PUBLISHED UNDER THE PATENT COOPERATION TREATY (PCT)

(19) World Intellectual Property Organization
International Bureau

(43) International Publication Date
5 May 2011 (05.05.2011)

PCT

(10) International Publication Number
WO 2011/053992 A2

(51) International Patent Classification:
F24F 11/02 (2006.01) *F24F 7/06* (2006.01)
F24F 7/10 (2006.01)

(21) International Application Number:
PCT/US2010/055147

(22) International Filing Date:
2 November 2010 (02.11.2010)

(25) Filing Language: English

(26) Publication Language: English

(30) Priority Data:
12/611,061 2 November 2009 (02.11.2009) US

(71) Applicant *(for all designated States except US)*: **EXAFLOP LLC** [US/US]; 1600 Amphitheatre Parkway, Mountain View, California 94043 (US).

(72) Inventor; and

(75) Inventor/Applicant *(for US only)*: **CARLSON, Andrew B.** [US/US]; 53 Parker Avenue, Atherton, California 94027 (US).

(74) Agents: **WERNLI, Matthew K.** et al.; Fish & Richardson P.C., P.O. Box 1022, Minneapolis, Minnesota 55440-1022 (US).

(81) Designated States *(unless otherwise indicated, for every kind of national protection available)*: AE, AG, AL, AM, AO, AT, AU, AZ, BA, BB, BG, BH, BR, BW, BY, BZ, CA, CH, CL, CN, CO, CR, CU, CZ, DE, DK, DM, DO, DZ, EC, EE, EG, ES, FI, GB, GD, GE, GH, GM, GT, HN, HR, HU, ID, IL, IN, IS, JP, KE, KG, KM, KN, KP, KR, KZ, LA, LC, LK, LR, LS, LT, LU, LY, MA, MD, ME, MG, MK, MN, MW, MX, MY, MZ, NA, NG, NI, NO, NZ, OM, PE, PG, PH, PL, PT, RO, RS, RU, SC, SD, SE, SG, SK, SL, SM, ST, SV, SY, TH, TJ, TM, TN, TR, TT, TZ, UA, UG, US, UZ, VC, VN, ZA, ZM, ZW.

(84) Designated States *(unless otherwise indicated, for every kind of regional protection available)*: ARIPO (BW, GH, GM, KE, LR, LS, MW, MZ, NA, SD, SL, SZ, TZ, UG, ZM, ZW), Eurasian (AM, AZ, BY, KG, KZ, MD, RU, TJ, TM), European (AL, AT, BE, BG, CH, CY, CZ, DE, DK, EE, ES, FI, FR, GB, GR, HR, HU, IE, IS, IT, LT, LU, LV, MC, MK, MT, NL, NO, PL, PT, RO, RS, SE, SI, SK, SM, TR), OAPI (BF, BJ, CF, CG, CI, CM, GA, GN, GQ, GW, ML, MR, NE, SN, TD, TG).

Declarations under Rule 4.17:

— *as to applicant's entitlement to apply for and be granted a patent (Rule 4.17(ii))*

— *as to the applicant's entitlement to claim the priority of the earlier application (Rule 4.17(iii))*

Published:

— *without international search report and to be republished upon receipt of that report (Rule 48.2(g))*

(54) **Title**: DATA CENTER WITH LOW POWER USAGE EFFECTIVENESS

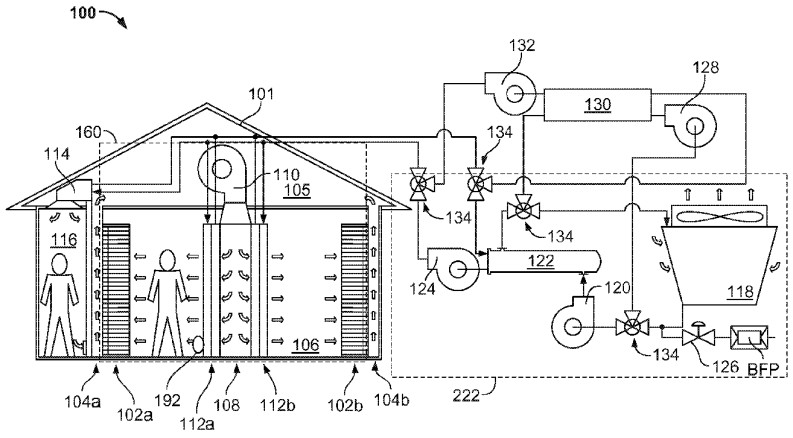

FIG. 1

(57) **Abstract**: A system for providing cooled air to electronic equipment includes a data center having electronic equipment in operation, a plurality of on- floor cooling units, and a cooling water source. The on-floor cooling units cool air warmed by the electronic equipment. The cooling water source is configured to supply cooling water that reduces a temperature of the on-floor cooling units. The power usage effectiveness ("PUE") of the system is less than 1.3, wherein the PUE is defined by energy used to operate the data center divided by energy used to run the electronic equipment.

WO 2011/053992 A2

DATA CENTER WITH LOW POWER USAGE EFFECTIVENESS

CROSS-REFERENCE TO RELATED APPLICATION

[0001] This application claims priority under 35 U.S.C. § 119(3) to U.S. Application Serial No. 12/611,061, filed on November 2, 2009, entitled DATA CENTER WITH LOW POWER USAGE EFFECTIVENESS, the disclosure of which is incorporated herein by reference.

TECHNICAL FIELD

[0002] This document relates to systems and methods for providing cooling for areas containing electronic equipment, such as computer server rooms and server racks in computer data centers.

BACKGROUND

[0003] Computer users often focus on the speed of computer microprocessors (e.g., megahertz and gigahertz). Many forget that this speed often comes with a cost—higher electrical power consumption. For one or two home PCs, this extra power may be negligible when compared to the cost of running the many other electrical appliances in a home. But in data center applications, where thousands of microprocessors may be operated, electrical power requirements can be very important.

[0004] Power consumption is also, in effect, a double whammy. Not only must a data center operator pay for electricity to operate its many computers, but the operator must also pay to cool the computers. That is because, by simple laws of physics, all the power has to go somewhere, and that somewhere is, for the most part, conversion into heat. A pair of microprocessors mounted on a single motherboard can draw 200-400 watts or more of power. Multiply that figure by several thousand (or tens of thousands) to account for the many computers in a large data center, and one can readily appreciate the amount of heat that can be generated. It is much like having a room filled with thousands of burning floodlights.

[0005] Thus, the cost of removing all of the heat can also be a major cost of operating large data centers. That cost typically involves the use of even more energy, in the form of electricity and natural gas, to operate chillers, condensers, pumps, fans,

cooling towers, and other related components. Heat removal can also be important because, although microprocessors may not be as sensitive to heat as are people, increases in heat generally can cause great increases in microprocessor errors and failures. In sum, such a system may require electricity to run the chips, and more electricity to cool the chips.

SUMMARY

[0006] In general, in one aspect, a method of cooling a data center during operation of electronic equipment includes monitoring a temperature outside of the data center, monitoring a leaving air temperature from an on-floor cooling unit in the data center, maintaining the leaving air temperature below an inside setpoint by flowing water through the on-floor cooling unit when the temperature outside of the data center is below a predetermined value, wherein the water is at least as cool as a predetermined water supply temperature, determining when the temperature outside of the data center rises above the predetermined value, and allowing the leaving air temperature to be greater than the inside setpoint by flowing water through the on-floor cooling unit that is warmer than the predetermined water supply temperature when the temperature outside of the data center rises above the predetermined value.

[0007] This and other embodiments can optionally include one or more of the following features. Monitoring the temperature outside the data center can include monitoring a temperature of water supplied from a cooling tower. The cooling system can include a plurality of on-floor cooling units, and wherein monitoring the leaving air temperature comprises monitoring the leaving air temperature of each on-floor cooling unit. The cooling system can further include a plurality of proportioning control valves, each proportioning control valve configured to control the flow of water through a corresponding on-floor cooling unit in response to the leaving air temperature of the corresponding on-floor cooling unit. The method can further include circulating more water through the on-floor cooling unit when the water is warmer than the predetermined water supply temperature than when the water is at least as cool as the predetermined water supply temperature. The method can further include limiting the time of flowing water through the cooling system that is warmer than the predetermined water supply

temperature to less than 1000 hours per year. The 1000 hours can be no consecutive. Flowing water through the cooling system that is warmer than the predetermined water supply temperature for more than 1500 hours per year can shorten the lifetime of the electronic equipment. Flowing water through the on-floor cooling unit can include flowing water from a cool water source. Limiting the time can include flowing water from a chiller through the on-floor cooling unit after water that is warmer than the predetermined water supply temperature has been circulated for 1000 hours. The data center can include a plurality of on-floor cooling units, and wherein flowing water from a chiller comprises flowing water from the chiller through the plurality of on-floor cooling unit. The data center can be rated to run on water having a temperature that is less than the predetermined water supply temperature. The predetermined water supply temperature can be between 65°F and 70°F.

[0008] In general, in one aspect, a method of cooling a data center during operation of electronic equipment includes monitoring a temperature outside of the data center, maintaining a temperature within the data center below an inside setpoint by flowing water through a cooling system within the data center when the temperature outside of the data center is below a predetermined value, wherein the water is at least as cool as a predetermined water supply temperature, determining when the temperature outside of the data center rises above the predetermined value, and allowing the temperature within the data center to be greater than the inside setpoint by flowing water through the cooling system that is warmer than the predetermined water supply temperature when the temperature outside of the data center rises above the predetermined value. The temperature within the data center is below the inside setpoint for at least 90% of an operating time of the electronic equipment.

[0009] This and other embodiments can optionally include one or more of the following features. The method can further include monitoring the temperature within the data center to determine when the temperature within the data center is below the inside setpoint. Flowing water through the cooling system can include flowing water from a cool water source. The method can further include flowing water from a chiller through the on-floor cooling unit when the temperature outside of the data center rises above the predetermined value for more than 10% of the operating time of the electronic

equipment. The data center can include a plurality of on-floor cooling units, and flowing water from a chiller can include flowing water from the chiller through the plurality of on-floor cooling unit. Operating at a temperature within the data center that is higher than the inside setpoint for more than 15% of the operating time of the electronic equipment can the lifetime of the electronic equipment. The cooling system can include a plurality of on-floor cooling units, and each on-floor cooling unit can include a corresponding proportioning control valve configured to control the flow of water through the on-floor cooling unit. The data center can be rated to run on water that is less than the predetermined water supply temperature. The predetermined water supply temperature can be between 65°F and 75°F.

[0010] In general, in one aspect, a system for providing cooled air to electronic equipment includes a data center having electronic equipment in operation, a plurality of on-floor cooling units, and a cooling water source. The on-floor cooling units cool air warmed by the electronic equipment. The cooling water source is configured to supply cooling water that reduces a temperature of the on-floor cooling units. The power usage effectiveness ("PUE") of the system is less than 1.3, wherein the PUE is defined by energy used to operate the data center divided by energy used to run the electronic equipment.

[0011] This and other embodiments can optionally include one or more of the following features. The PUE of the system can be about 1.2. The cooling water source can include a cooling tower. Each on-floor cooling unit can include a heat exchanger configured to transfer heat from the electronic equipment to the cooling water source. The heat exchanger can include coils located adjacent to one or more common hot air plenums that receive heated air from the electronic equipment. The cooling water source can be fluidically coupled to the on-floor cooling units. The system can further include a sensor to monitor the leaving air temperature of an on-floor cooling unit. The system can further include a plurality of proportioning valves, each proportioning valve configured to control circulation of water through a corresponding on-floor cooling unit.

[0012] Advantages of the systems and methods described herein may include one or more of the following. If the temperature inside the data center is allowed to rise above the inside setpoint for short periods of time, then the use of expensive chillers can

be minimized. By monitoring the leaving air temperature, e.g. the temperature of the air leaving a the cooling coil or cool air plenum of the on-floor cooling unit, rather than the temperature of individual servers, the temperature indication will be more accurate, making the cooling system more efficient. If control valves are configured to individually control the flow of water to each on-floor cooling unit, the total amount of water required for the system can be reduced. By connecting chillers to a separate header, corresponding modules, e.g. modules which include a series of cooling units, control valves, and a modular cooling plant, can remain on-line even when the corresponding modular cooling plant fails.

[0013] The details of one or more embodiments are set forth in the accompanying drawings and the description below. Other features and advantages will be apparent from the description and drawings, and from the claims.

DESCRIPTION OF DRAWINGS

[0014] FIG. 1 is a schematic diagram showing a system for cooling a computer data center.

[0015] FIG. 2A is a schematic diagram showing a system for cooling server racks in a data center.

[0016] FIG. 2B is a schematic diagram showing two different plants, each having a system for cooling server racks in a data center.

[0017] FIG. 3 is a psychometric chart showing a heating and cooling cycle for air in a data center.

[0018] FIG. 4 is a graph of setpoint temperature for a computing facility over a one year time period.

[0019] FIG. 5 is a flowchart showing steps for cooling a data center by measuring the leaving air temperature and accounting for elevated temperatures during limited times of the year.

[0020] FIG. 6 is a flowchart showing steps for cooling a data center using one or more periods of elevated temperatures for less than 90% of the operating time of the data center electronic equipment.

[0021] FIG. 7 is a flowchart for cooling a data center having both chilled water and cooled water and using one or more periods of elevated temperatures

[0022] Like reference symbols in the various drawings indicate like elements.

DETAILED DESCRIPTION

[0023] FIG. 1 is a schematic diagram showing a system 100 for cooling a computer data center 101. The system 100 generally includes an on-floor cooling unit 160 having an air handling unit (including e.g., fan 110 and cooling coils 112a, 112b) for transferring heat from the data center's air to cooling water. System 100 can also include a modular cooling plant 222. Modular cooling plant 222 can include a power and cooling unit ("PCU") having pumps 124, 120, valves 134, filters (not shown), and a heat exchanger 122 for removing heat from the cooling water and passing it to condenser water that is delivered to a cooling tower 118 in modular cooling plant 222. The cooling tower 118 in modular cooling plant 222 a cooling water tower, a dry cooler including only a fan coil unit, or a hybrid tower including both a cooling water tower and a dry cooler. Alternatively, a cool water source such as a lake or bay can be used instead of a cooling tower 118. The cooling water 118 in modular cooling plant 222 passes the accumulated heat to the ambient air through evaporation and cooling of the cooling tower water to create cooled water. In general operation, the system 100 operates using only the cooling tower/heat exchanger/cooling coil system, though a powered refrigeration system such as a chiller may be used to provide chilled water during peak loads, such as when the outdoor ambient dew point is very high and the cooling tower cannot provide sufficient cooling alone. As explained below, control parameters for the system may also be set so as to avoid most or any need for the use of chillers or other such powered refrigeration systems.

[0024] The temperatures of each portion of the system 100 are selected to be relatively high (compared to conventional refrigeration-based cooling systems), so as to permit more efficient operation of the system 100. For example, relatively high air temperatures in the system (e.g., air entering a cooling coil over 110°F (43.3°C) and exiting the coil at a temperature above 70°F (21.11°C)) may in turn permit for relatively high cooling water temperatures (e.g., water entering a cooling coil around 68°F (20°C)

and exiting around 104°F (40°C)) because the amount of heat that can be taken out of the air is generally proportional to the difference in temperature between the water and the air. If the difference can be kept at an acceptable level, where the temperatures are high enough that evaporative cooling (e.g., cooling through a cooling tower, without further cooling via chiller) is sufficient, the relatively high electrical cost of operating a chiller (or many chillers) may be avoided.

[0025] High system temperatures may be particularly advantageous in certain implementations when hybrid cooling towers are used. Such hybrid cooling towers combine the functionality of an ordinary cooling tower with a water-to-water heat exchanger. Using a sufficiently high temperature setpoint, i.e. the maximum temperature at which the data center 101 is allowed to operate for the majority of the operating time of the electronic equipment, may allow the hybrid tower to provide substantial cooling capacity, even when operating in a water-to-air mode without utility water. As a result, a hybrid cooling tower may be used to provide cooling capacity to a facility relatively quickly, even before utility water may be obtained in large volumes. The capacity of the cooling tower may be directly related to the difference in the temperature of the water within it to the ambient outside air.

[0026] When the difference in temperatures is not very large, a change of only a few degrees can bring substantial gains in efficiency. For example, where the cooling water enters at 68°F (20°C), by heating air to 113°F (45°C) rather than 104°F (40°C), the temperature difference is increased from 36°F to 45°F (20°C to 45°C)—which may result in an increase in heat flow of 25 percent. The actual difference will vary slightly, as the entering conditions for air and water are not the only conditions (because the air cools as it passes through a cooling coil, and the water warms); this example, however, indicates how the difference in temperature can affect efficiency of a system.

[0027] Use of elevated temperatures in a system may also prevent air in or around the system from falling below its liquid saturation point, i.e., its dew point, and condensing. This may, in certain circumstances, provide benefits both in efficiency and in operation of the system. Efficiency benefits may be obtained because creating condensation requires much more energy than simply cooling air, so that systems creating condensation may use a large amount of electricity or other energy. Improvements in

operation of the system may occur because, if pipes in the system carry water that is below the saturation temperature of the air around the pipes, condensation might form on the pipes. That condensation can damage the pipes or equipment in the conditioned space, cause mold, and cause water to pool on the floor, and can require the installation of insulation on the pipes (to stop the condensation).

[0028] In the system shown in FIG. 1, use of elevated temperatures may substantially reduce, or almost entirely eliminate, the need for energy-intensive cooling components such as chillers and the like, even where the heat load in the data center 101 is very high. As a result, system 100 may be operated at a lower operating cost than could otherwise be achieved. In addition, lower capital costs may be required, because fans, coils, heat exchangers, and cooling towers are relatively basic and inexpensive components. In addition, by operating with a higher temperature difference between cooled air and cooling water, less volume of cooling water is needed, thus reducing the size and cost of piping, and the cost to operate pumps and other such components.

[0029] In addition, those components are often very standardized, so that their acquisition costs are lower, and they are more easily located, particularly in developing countries and remote areas where it may be beneficial to place a data center 101. Use of system 100 in remote areas and other areas with limited access to electrical power is also helped by the fact that system 100 may be operated using less electrical power. As a result, such a system can be located near lower-power electrical sub-stations and the like. As discussed more completely below, lower-powered systems may also be amenable to being implemented as self-powered systems using energy sources such as solar, wind, natural-gas powered turbines, fuel cells, and the like.

[0030] Referring now to FIG. 1, there is shown a data center 101 in sectional view, which as shown, is a building that houses a large number of computers or similar heat-generating electronic components. A workspace 106 is defined around the computers, which are arranged in a number of parallel rows and mounted in vertical racks, such as racks 102a, 102b. The racks may include pairs of vertical rails to which are attached paired mounting brackets (not shown). Trays containing computers, such as standard circuit boards in the form of motherboards, may be placed on the mounting brackets.

[0031] In one example, the mounting brackets may be angled rails welded or otherwise adhered to vertical rails in the frame of a rack, and trays may include motherboards that are slid into place on top of the brackets, similar to the manner in which food trays are slid onto storage racks in a cafeteria, or bread trays are slid into bread racks. The trays may be spaced closely together to maximize the number of trays in a data center, but sufficiently far apart to contain all the components on the trays and to permit air circulation between the trays.

[0032] Other arrangements may also be used. For example, trays may be mounted vertically in groups, such as in the form of computer blades. The trays may simply rest in a rack and be electrically connected after they are slid into place, or they may be provided with mechanisms, such as electrical traces along one edge, that create electrical and data connections when they are slid into place.

[0033] Air may circulate from workspace 106 across the trays and through on-floor cooling unit 160. Although only one on-floor cooling unit 160 is shown in FIG. 160, data center 101 can include multiple on-floor cooling units 160. On-floor cooling unit 160 includes warm-air plenums 104a, 104b behind the trays. The air may be drawn into the trays by fans mounted at the back of the trays (not shown). The fans may be programmed or otherwise configured to maintain a set exhaust temperature for the air into the warm air plenum, and may also be programmed or otherwise configured to maintain a particular temperature rise across the trays. Where the temperature of the air in the work space 106 is known, controlling the exhaust temperature also indirectly controls the temperature rise. The work space 106 may, in certain circumstances, be referenced as a "cold aisle," and the plenums 104a, 104b as "warm aisles."

[0034] The temperature rise can be large. For example, the work space 106 temperature may be about 77°F (25 °C) and the exhaust temperature into the warm-air plenums 104a, 104b may be set to 113°F (45 °C), for a 36°F (20 °C)) rise in temperature. The exhaust temperature may also be as much as 212 °F (100°C) where the heat generating equipment can operate at such elevated temperature. For example, the temperature of the air exiting the equipment and entering the warm-air plenum may be 118.4, 122, 129.2, 136.4, 143.6, 150.8, 158, 165, 172.4, 179.6, 186.8, 194, 201, or 208.4°F (48, 50, 54, 58, 62, 66, 70, 74, 78, 82, 86, 90, 94, or 98 °C). Such a high exhaust

temperature generally runs contrary to teachings that cooling of heat-generating electronic equipment is best conducted by washing the equipment with large amounts of fast-moving, cool air. Such a cool-air approach does cool the equipment, but also uses a lot of energy.

[0035] Cooling of particular electronic equipment, such as microprocessors, may be improved even where the flow of air across the trays is slow, by attaching impingement fans to the tops of the microprocessors or other particularly warm components, or by providing heat pipes and related heat exchangers for such components.

[0036] The heated air may be routed upward into a ceiling area, or attic 105, or into a raised floor or basement, or other appropriate space, and may be gathered there by air handling units that include, for example, fan 110 of on-floor cooling unit 160, which may include, for example, one or more centrifugal fans appropriately sized for the task. The fan 110 may then deliver the air back into a plenum 108 located adjacent to the workspace 106. The plenum 108 may be simply a bay-sized area in the middle of a row of racks, that has been left empty of racks, and that has been isolated from any warm-air plenums on either side of it, and from cold-air work space 106 on its other sides. Alternatively, air may be cooled by coils defining a border of warm-air plenums 104a, 104b and expelled directly into workspace 106, such as at the tops of warm-air plenums 104a, 104b.

[0037] On-floor cooling unit 160 can also have cooling coils 112a, 112b located on opposed sides of the plenum approximately flush with the fronts of the racks. (The racks in the same row as the plenum 108, coming in and out of the page in the figure, are not shown.) The coils may have a large surface area and be very thin so as to present a low pressure drop to the system 100. In this way, slower, smaller, and quieter fans may be used to drive air through the system. Protective structures such as louvers or wire mesh may be placed in front of the coils 112a, 112b to prevent them from being damaged.

[0038] In operation, fan 110 of on-floor cooling unit 160 pushes air down into plenum 108, causing increased pressure in plenum 108 to push air out through cooling coils 112a, 112b. As the air passes through the coils 112a, 112b, its heat is transferred into the water in the coils 112a, 112b, and the air is cooled.

[0039] The speed of the fan 110 and/or the flow rate or temperature of cooling water flowing in the cooling coils 112a, 112b may be controlled in response to measured values. For example, the pumps driving the cooling liquid may be variable speed pumps that are controlled to maintain a particular temperature in work space 106. Such control mechanisms may be used to maintain a constant temperature in workspace 106 or plenums 104a, 104b and attic 105.

[0040] The workspace 106 air may then be drawn into racks 102a, 102b such as by fans mounted on the many trays that are mounted in racks 102a, 102b. This air may be heated as it passes over the trays and through power supplies running the computers on the trays, and may then enter the warm-air plenums 104a, 104b. Each tray may have its own power supply and fan or fans. In some implementation, the power supply is located at the back edge of the tray, and the is fan attached to the back of the power supply. All of the fans may be configured or programmed to deliver air at a single common temperature, such as at a set 113°F (45°C). The process may then be continuously readjusted as fan 110 captures and circulates the warm air.

[0041] Additional items may also be cooled using system 100. For example, room 116 is provided with a self-contained fan-coil unit 114 which contains a fan and a cooling coil. The unit 114 may operate, for example, in response to a thermostat provided in room 116. Room 116 may be, for example, an office or other workspace ancillary to the main portions of the data center 101.

[0042] In addition, supplemental cooling may also be provided to room 116 if necessary. For example, a standard roof-top or similar air-conditioning unit (not shown) may be installed to provide particular cooling needs on a spot basis. As one example, system 100 may be designed to deliver 78°F (25.56°C) supply air to work space 106, and workers may prefer to have an office in room 116 that is cooler. Thus, a dedicated air-conditioning unit may be provided for the office. This unit may be operated relatively efficiently, however, where its coverage is limited to a relatively small area of a building or a relatively small part of the heat load from a building. Also, cooling units, such as chillers, may provide for supplemental cooling, though their size may be reduced substantially compared to if they were used to provide substantial cooling for the system 100.

[0043] Fresh air may be provided to the workspace 106 by various mechanisms. For example, a supplemental air-conditioning unit (not shown), such as a standard roof-top unit may be provided to supply necessary exchanges of outside air. Also, such a unit may serve to dehumidify the workspace 106 for the limited latent loads in the system 100, such as human perspiration. Alternatively, louvers may be provided from the outside environment to the system 100, such as powered louvers to connect to the warm air plenum 104b. System 100 may be controlled to draw air through the plenums when environmental (outside) ambient humidity and temperature are sufficiently low to permit cooling with outside air. Such louvers may also be ducted to fan 110, and warm air in plenums 104a, 104b may simply be exhausted to atmosphere, so that the outside air does not mix with, and get diluted by, the warm air from the computers. Appropriate filtration may also be provided in the system, particularly where outside air is used.

[0044] Also, the workspace 106 may include heat loads other than the trays, such as from people in the space and lighting. Where the volume of air passing through the various racks is very high and picks up a very large thermal load from multiple computers, the small additional load from other sources may be negligible, apart from perhaps a small latent heat load caused by workers, which may be removed by a smaller auxiliary air conditioning unit as described above.

[0045] Cooling water may be provided from modular cooling plant 222 that can include a cooling water circuit and a condenser water circuit. Cooling water circuit can be powered by pump 124. The cooling water circuit may be formed as a direct-return, or indirect-return, circuit, and may generally be a closed-loop system. Pump 124 may take any appropriate form, such as a standard centrifugal pump. Heat exchanger 122 may remove heat from the cooling water in the circuit. Heat exchanger 122 may take any appropriate form, such as a plate-and-frame heat exchanger or a shell-and-tube heat exchanger.

[0046] Heat may be passed from the cooling water circuit to a condenser water circuit that includes heat exchanger 122, pump 120, and cooling tower 118. Pump 120 may also take any appropriate form, such as a centrifugal pump. Cooling tower 118 may be, for example, one or more forced draft towers or induced draft towers. The cooling tower 118 may be considered a free cooling source, because it requires power only for

movement of the water in the system and in some implementations the powering of a fan to cause evaporation; it does not require operation of a compressor in a chiller or similar structure.

[0047] The cooling tower 118 may take a variety of forms, including as a hybrid cooling tower. Such a tower may combine both the evaporative cooling structures of a cooling tower with a water-to-water heat exchanger. As a result, such a tower may be fit in a smaller face and be operated more modularly than a standard cooling tower with separate heat exchanger. Additional advantage may be that hybrid towers may be run dry, as discussed above. In addition, hybrid towers may also better avoid the creation of water plumes that may be viewed negatively by neighbors of a facility.

[0048] As shown, the fluid circuits may create an indirect water-side economizer arrangement. This arrangement may be relatively energy efficient, in that the only energy needed to power it is the energy for operating several pumps and fans. In addition, this system may be relatively inexpensive to implement, because pumps, fans, cooling towers, and heat exchangers are relatively technologically simple structures that are widely available in many forms. In addition, because the structures are relatively simple, repairs and maintenance may be less expensive and easier to complete. Such repairs may be possible without the need for technicians with highly specialized knowledge.

[0049] Alternatively, direct free cooling may be employed, such as by eliminating heat exchanger 122, and routing cooling tower water (condenser water) directly to cooling coils 112a, 112b (not shown). Such an implementation may be more efficient, as it removes one heat exchanging step. However, such an implementation also causes water from the cooling tower 118 to be introduced into what would otherwise be a closed system. As a result, the system in such an implementation may be filled with water that may contain bacteria, algae, and atmospheric contaminants, and may also be filled with other contaminants in the water. A hybrid tower, as discussed above, may provide similar benefits without the same detriments.

[0050] Control valve 126 is provided in the condenser water circuit to supply make-up water to the circuit. Make-up water may generally be needed because cooling tower 118 operates by evaporating large amounts of water from the circuit. The control valve 126 may be tied to a water level sensor in cooling tower 118, or to a basin shared

by multiple cooling towers. When the water falls below a predetermined level, control valve 126 may be caused to open and supply additional makeup water to the circuit. A back-flow preventer (BFP) may also be provided in the make-up water line to prevent flow of water back from cooling tower 118 to a main water system, which may cause contamination of such a water system.

[0051] Although FIG. 1 shows the modular cooling plant 222 connected to only one on-floor cooling unit 160, a modular cooling plant 222 can be connected to a number of on-floor cooling units 160, as shown in FIG. 2A, with the on-floor cooling units 160 connected in parallel to the modular cooling plant 222. Each modular cooling plant 222 can serve, for example, 12 or more on-floor cooling units 160. Furthermore, system 100 can have a number of modular cooling plants 222. System 100 can be, for example, a building using 30 megawatts (MW) of electrical power. There can then be a number of modular cooling plants 222 connected to the building, for example fifteen modular cooling plants 222 each providing cooling for each 2MW of electrical power used by the data center.

[0052] The modular cooling plants 222 and on-floor cooling units 222 can be connected through ladder pipes 244. Supply line 246 can supply cool water to the on-floor cooling units, while return line 248 can return warm water to the modular cooling plants 222 to be cooled. Along at least one pipe is a corresponding control valve 224 located so that flow to a single cooling unit can be controlled. The modular cooling plant 222, corresponding cooling units 160, and control valves 224 can together be called a module 230. Each control valve 224 can control the flow of water through the corresponding on-floor cooling unit 160 without affecting the other cooling units in the module. The control valves 224 can provide only the water that the particular on-floor cooling unit 160 needs. That is, the control valve 224 can be a proportioning valve rather than a digital "on" or "off" type control valve. Each control valve 224 can have a motor (not shown) that can turn the corresponding valve such that it is open as wide as necessary to circulate the needed water through the corresponding on-floor cooling unit 160. A controller can control the motor. There can be, for example, one master controller to control all of the control valves 224. Alternatively, each control valve 224 can have a corresponding controller to independently control each motor. In some implementations,

a master controller can control all of the individual controllers. The controllers can control the control valves 224 to respond to the leaving air temperature (LAT) or other local variables of each cooling unit 160. For example, the controllers can control the control valves 224 to respond to a change in the difference between the leaving air temperature and the entering water temperature.. Each control valve 224, and thus each on-floor cooling unit 160, can act independently of another valve 224 or on-floor cooling unit 160. That is, all increases or decreases in flow through system 100 can be local through controllers at each corresponding on-floor cooling unit 160.

[0053] By designing system 100 such that the amount of water to each on-floor cooling unit 160 is individually controlled and such that all of the modular cooling plants 222 are connected to a common header, water from the system can be distributed to the load in system 100 rather than flowing a constant amount of water through the entire system 100. In this way, water that is not needed for one on-floor cooling unit 160 can be made available to another on-floor cooling unit 160. Because the on-floor cooling units 160 act independently, there can be a large number of on-floor cooling units 160 in system 100, for example over 1,000 cooling units. Further, the system 100 can be designed such that cooled air from multiple cooling units 160 can mix between the time it leaves cooling coils 112a, 112b and is drawn into the servers 102a, 102b, such as by using higher ceiling to exhaust the cooled air from the fan 110 and cooling coils 112a,112b into the space above the servers 102a, 102b. Having such a design ensures that if one on-floor cooling unit 160 fails, *e.g.* as a result of control valve 224 flowing too much or too little water to the respective on-floor cooling unit 160, the other on-floor cooling units 160 can compensate to cool the data center 101. Moreover, system 100 can be designed such that if one modular cooling plant 222 fails, other modular cooling plants 222 along the same header can take the load. Such a design can allow for the cooling of large numbers of servers. For example, system 100 can include over 1,000 cooling units and corresponding server racks.

[0054] Optionally, a few chillers 130 can be available for use by the system 100. A separate chiller header 228 may be provided which connects one chiller to multiple modular cooling plants 222. Operation of system 100 may switch some or all of the chillers 130 on during times of extreme atmospheric ambient (i.e., hot and humid)

conditions or times of high heat load in the data center 101. Referring back to FIG. 1, controlled mixing valves 134 are provided for electronically switching to the chiller circuit, or for blending cooling water from the chiller circuit with cooling water from the condenser circuit. Pump 128 is able to supply tower water to chiller 130, and pump 132 is able to supply chilled water, or cooling water, from chiller 130 to the remainder of system 100. Chiller 130 can take any appropriate form, such as a centrifugal, reciprocating, or screw chiller, or an absorption chiller.

[0055] The chiller circuit can be controlled to provide various appropriate temperatures for cooling water. The chilled water may be supplied from chiller 130 at temperatures elevated from conventional chilled water temperatures. For example, the chilled water may be supplied at temperatures of 55°F (13°C) to 70°F (18 to 21°C) or higher. For example, the water supply temperature can be between 60-64°F, 65-70°F, 71-75°F, or 76-80°F. The water may then be returned at higher temperatures, such as 59 to 176°F (15 to 80°C). In this approach that uses sources in addition to, or as an alternative to, free cooling, increases in the supply temperature of the chilled water can also result in substantial efficiency improvements for the system 100.

[0056] Referring to FIG. 2A, because the chillers 130 are on a separate circuit 228 from the modules 230, the chillers 130 can be shared among modules 230. Such an arrangement can be beneficial when a modular cooling plant 222 or chiller 130 fails. Because the chillers 130 are shared among modules 160, any chiller 130 can supply chilled water to keep the module 160 functioning when either one chillers fails or when a corresponding modular cooling plant 222 fails. Thus, the system 100 can become more robust as more modules 160 and more chillers 130 are added, as described further herein. Furthermore, the number of chillers 130 can be less than the number of modules 230 to reduce costs. Valves between the chillers and the modular cooling plants 222 can control which chiller supplies chilled water to which modular cooling plant 222. Although not shown, and although on separate headers from the modules 230, the chillers 130 can be housed in some or all of the modules 222.

[0057] Referring back to FIG. 1, pumps 120, 124, 128, 132, may be provided with variable speed drives. Such drives may be electronically controlled by a central control system to change the amount of water pumped by each pump in response to changing

environmental conditions or changing conditions such as equipment failure or a new set point in system 100. For example, pump 124 may be controlled to maintain a particular temperature in workspace 106, such as in response to signals from a thermostat or other sensor in workspace 106.

[0058] As shown in FIG. 2B, system 100 can be highly modular, and can therefore be scaled from a very small system to a very large system by adding additional components and subsystems. Because system 100 is modular, the data center can be expanded as capacity is needed while maintaining operation of the plant during construction. A first set of racks of electronic equipment, for example, racks of servers, and associated modular cooling plants and optional chillers can be installed and operation of the equipment can be initiated. As more electronic equipment is needed and received, a second set of the electronic equipment and associated modular cooling plants are installed and placed online. The modular cooling plants associated with the first set of equipment can be fluidly coupled to the modular cooling plants associated with the second set of equipment to provide the backup cooling in the event of failover. Furthermore, although existing plant 301 and future plant 302 are shown as separate systems, connections, such as connection 303, can be made between the two plants in order to share components. While sharing components between old and new systems may cause construction-based interruptions in the existing system, it may also provide for better utilization of the components in the full system. For example, chillers 130 can be extended to be shared among both plants 301 and 302.

[0059] In operation, system 100 may respond to signals from one or more sensors 192 placed in system 100. The sensors may include, for example, thermostats, humidistats, flowmeters, and other similar sensors. In one implementation, one or more thermostats may be provided to monitor the temperature inside the data center. In some embodiments, air adjacent to an on-floor cooling unit 160 is partially isolated from air adjacent to a neighboring on-floor cooling unit 160. A single on-floor cooling unit 160 cools heated air generated by the servers in the associated workspace. The sensors 192 can measure the leaving air temperature, defined as the temperature leaving the cool air coils 112a, 112b or the cool air plenum 108. To measure the leaving air temperature, the

one or more sensors 192 can be placed, for example, next to he cool air coils 112a, 112b or the cool air plenum 108 of each on-floor cooling unit 160.

[0060]As shown in FIG. 1, a single temperature sensor 192 can be used for each on-floor cooling unit 160. Alternatively, an array of sensors, such as between two and ten sensors, for example four sensors, may be used for each on-floor cooling unit and the average temperature, such as the average leaving air temperature, determined. While other implementations may include placing multiple thermostats throughout system 110, such as in the warm air plenums 104a, 104b or near the servers 102a, such temperatures tend to vary. Measuring the leaving air temperature may therefore be a more robust method of controlling system 100.

[0061] The leaving air temperature measured by the thermostats can be used to control the valves 224 associated with the on-floor cooling units 160. Further, although in some implementations, the pumps 120, 124, 128, 132 are fixed speed pumps, in other implementations, the temperature reading from the thermostats may be used to control the speed of associated pumps. When the leaving air temperature begins to rise above an inside setpoint, the control valves 224 can be open wider or the pumps 120, 124, 128, 132 can run faster to provide additional cooling water. Such additional cooling water can reduce the leaving air temperature. The leaving air temperature can also be used to indirectly effect the server fans. That is, for computers that regulate their fan speed based on how hard the server is working, controlling the cooling unit leave air temperature to eliminate hot spots in the work area 106 can allow those servers to run their fans slower, thereby using less energy that would otherwise be required.

[0062] When additional water is circulated through system 100 as a result of the valves 224 opening or the pumps 120, 124, 128, 132 pulling more water, the pressure differential between the supply 246 and return 248 ladders falls, requiring the pumps 120, 124, 128, 132 to settle on a lower pressure equilibrium than usual (called "riding the pump curve"), whereby the pressure drop across the cooling units matches the pressure differential of the pumps. As excess water is drawn from modular cooling plant 222, the modular cooling plant 222 may not be able to maintain a predetermined water supply temperature. For example, because the water is cycling through the system more quickly and the environmental temperature is higher, the cooling towers may not have sufficient

time to kick off heat from the water to the environment than when the external temperature is lower. As a result, water that is warmer than the predetermined water supply temperature is circulated through system 100.

[0063] The potentially negative result of circulating water that is warmer than the predetermined water supply temperature through an on-floor cooling unit 160, that is, of less cooling ability of the water flowing through the cooling unit 160, however, can be more than offset by the positive result of flowing extra water through the on-floor cooling unit 160. Thus, the resulting leaving air temperature can be brought down below the inside setpoint. In some embodiments, while the cooling water supplied to on-floor cooling units 160 may be 1 degree warmer than the predetermined water supply temperature, the resulting leaving air temperature may be more than 1 degree cooler than the inside setpoint.

[0064] Controllers may also be used to control the speed of various items such as fan 110 to maintain a set pressure differential between two spaces, such as attic 105 and workspace 106, and to thereby maintain a desired airflow rate. Where mechanisms for increasing cooling, such as speeding the operation of pumps, are no longer capable of keeping up with increasing loads, a control system may activate chiller 130 and associated pumps 128, 132, and may modulate control valves 134 accordingly to provide additional cooling.

[0065] System 100 may also respond to signals from outside data center 101, e.g. to the temperature outside the data center 101 (which can correlated to and monitored by the temperature of water supplied from the cooling tower). Thermostats may be used to monitor the temperature outside the data center 101. When the temperature, e.g. either the air temperature or the wetbulb temperature, outside of the data center 101 is below a predetermined value, water that is cooled in the cooling tower is at least as cool as a predetermined water supply temperature. This cooled water can be circulated through system 100 in order to keep the temperature inside the data center 101, for example the leaving air temperature of each on-floor cooling unit 160, below an inside setpoint. The inside setpoint can be, for example, less than 120°F, such as less than 115°F or less than 110°F, such as 75°F to 85°F and can vary throughout the year, as discussed below. Federal OSHA and California OSHA guidelines may also provide limitations on the

inside setpoint. Furthermore, the setpoint might vary by geographical location to take into account the average temperature and humidity in the respective location. When the temperature outside the data center 101 rises above the predetermined value, water that is warmer than the predetermined water supply temperature can be circulated through system 100, thus causing the temperature inside the data center 101 to rise above the inside setpoint. The data center 101 can be rated to run on water having a temperature that is less than the predetermined water supply temperature, i.e. data center 101 may have sufficient water resources to keep the leaving air temperature below a predetermined temperature and in some cases, to keep the water temperature in system 100 less than the predetermined water supply temperature.

[0066] In one implementation, supply temperatures for cooling water can be between 65°F and 70°F, such as 68°F (20°C), while return temperatures can be between 100°F and 110°F, such as 104°F (40°C). In other implementations, the supply water can be supplied at temperatures of 50°F to 84.20°F or 104°F (10°C to 29°C or 40°C) and the return water can be supplied at temperatures of 59°F to 176°F (15°C to 80°C) for return water. The temperature of the water supplied by the cooling tower may be generally slightly above the wet bulb temperature under ambient atmospheric conditions, while the temperature of the water returned to the cooling tower will depend in part on the heat inside building 101.

[0067] Using these parameters and the parameters discussed above for entering and exiting air, relatively narrow approach temperatures may be achieved with the system 100. The approach temperature, in this example, is the difference in temperature between the air flowing away from a coil and the water entering a coil. The approach temperature is always positive because the water entering the coil is the coldest water, and the water warms as it travels through the coil. As a result, the water can be appreciably warmer by the time it exits the coil. Air passing over the coil near the water's exit point is warmer than air passing over the coil at the water's entrance point. Because even the most-cooled exiting air at the cooling water's entrance point is warmer than the entering water, the overall exiting air temperature is at least somewhat warmer than the entering cooling water temperature.

[0068] Keeping the approach temperature small permits a system to be run on free, or evaporative, cooling for a larger portion of the year and reduces the size of a chiller used with the system, if any chiller is needed at all. To lower the approach temperature, the cooling coils may be designed for counterflow. In counter-flow, the warmest air flows near the warmest water and the coolest air exits near where the coolest water enters.

[0069] In certain implementations, the entering water temperature may be 64°F (18°C) and the exiting air temperature 77°F (25°C), as noted above, for an approach temperature of 13°F (7°C). In other implementations, wider or narrower approach temperature may be selected based on economic considerations for an overall facility.

[0070] With a close approach temperature, the temperature of the cooled air leaving the coil closely tracks the temperature of the cooling water entering the coil. As a result, the air temperature can be maintained, generally regardless of load, by maintaining a constant water temperature. In an evaporative cooling mode, a constant water temperature can be maintained as the wet bulb temperature stays constant (or changes very slowly), and by blending warmer return water with supply water or modulating cooling tower fans as the wet bulb temperature falls. As such, active control of the cooling air temperature can be avoided in certain situations, and control can occur simply on the cooling water return and supply temperatures.

[0071] FIG. 3 is a psychrometric chart showing a heating and cooling cycle for air in a data center. A psychrometric chart graphically represents the thermodynamic properties of moist air (which is air containing any appreciable moisture, and not merely air that would feel moist to a person). The chart is from ASHRAE Psychrometric Chart No.1, which defines properties of air for sea level applications. *See* 1997 ASHRAE Handbook – Fundamentals, at page 6.15. Other charts may also be used, and the chart shown here is merely used to exemplify certain aspects of the concepts discussed in the present document.

[0072] The psychrometric chart is criss-crossed with a number of lines that represent various properties of air. Cooling and heating processes on air can be analyzed by identifying a point on the chart that represents air at a particular condition (e.g., temperature and humidity), and then locating another point that represents the air at

another condition. A line between those points, generally drawn as a straight line, may be fairly assumed to represent the conditions of the air as it moves from the first condition to the second, such as by a cooling process.

[0073] Several properties will be discussed here. First, saturation temperature is an arc along the left of the graph and represents the temperature at which air becomes saturated and moisture begins coming out of the air as a liquid—also known popularly as the "dew point." When the temperature of air is taken below the dew point, more and more water comes out of the air because the cooler air is capable of holding less water.

[0074] The dry bulb temperature of air is listed along the bottom of the graph and represents what is popularly viewed as temperature, i.e., the temperature returned by a typical mercury thermometer.

[0075] The chart shows two numbers relating to the humidity of air. The first is the humidity ratio, listed along the right edge of the graph, and is simply the weight of moisture per each unit weight of dry air. Thus, the humidity ratio will stay constant at various temperatures of air, until moisture is removed from the air, such as by pushing the air temperature down to its dew point (e.g., the moisture comes out of the air and ends up on the grass in the morning) or by putting moisture into the air (e.g., by atomizing water into such as fine mist in a humidifier that the mist can be supported by the natural motion of the air molecules). Thus, when graphing processes that involve simple changes in air temperature, the point that represents the state of the air will move straight left and right along the graph at a constant humidity ratio. That is because the dry-bulb temperature will go up and down, but the humidity ratio will stay constant.

[0076] The second humidity parameter is the so-called relative humidity. Unlike the humidity ratio, which measures the absolute amount of moisture in the air, the relative humidity measures the amount of moisture in the air as a percent of the total moisture the air could possibly hold at its current temperature. Warmer air can hold more moisture than can colder air, because the molecules in warmer air are moving more rapidly. Thus, for an equal amount of moisture in the air (i.e., an equal humidity ratio), the relative humidity will be lower at a high temperature than at a low temperature.

[0077] As one example, on a summer day when the overnight low was 55 degrees Fahrenheit and there is dew on the ground, and the daytime high is around 75 degrees

Fahrenheit, the relative humidity in the early morning will be about 100% (the dew point), but the relative humidity in the afternoon will be a very comfortable 50%, even if one assumes that the identical amount of water is in the air at both times. This exemplary process is shown in FIG. 3 by the points marked C and D, with point C showing saturated air at 55 degrees Fahrenheit (the overnight low), and point D representing that same air warmed to 75 degrees Fahrenheit (the daytime temperature) .

[0078] Commercial air handling systems take advantage of this same process in providing conditioned air in a building. Specifically, systems may gather air from an office space at 75 degrees Fahrenheit and a relative humidity of 60 percent. The systems pass the air through a cooling coil that looks like an automobile radiator to cool the air to 55 degrees Fahrenheit, which will typically push the air down to its dew point. This will make moisture pour out of the air as it passes through the cooling coil. The moisture can be captured in drains below the cooling coil and then be removed from the building. The air can then be returned to the work space, and when it warms back to 75 degrees, it will be a very comfortable 50 percent relative humidity.

[0079] This common cooling process is shown by points A, B, C, and D on the chart of FIG. 3. Point A shows the 75 degree air at 70 percent relative humidity. Point B shows the air cooled to its dew point, which it hits at a temperature (dry bulb) of about 65 degree Fahrenheit. Further cooling of the air to 55 degrees Fahrenheit (to point C) rides along the saturation curve, and water will come out of the air during that portion of the cooling. Finally, the state of the air moves to point D as the air is warmed and reaches 75 degrees Fahrenheit again. At this point, the relative humidity will be 50 percent (assuming it does not pick up additional moisture from the room or the existing room air) rather than the original 60 percent because the cooling process has dehumidified the air by pulling moisture out of the air in the cooling coil. If the room air contains more moisture than does the cooled air, point D will be slightly above its position shown in FIG. 3, but still below point A.

[0080] Such a common process brings with it a number of challenges. First, to cool the air to 55 degrees Fahrenheit, the system must provide cooling water in the cooling coil that can absorb all the heat. Such water would need to be at least cooler than 55 degrees Fahrenheit. It may be expensive to create such cool water—requiring systems

such as chillers and other energy-intensive systems. In addition, the area immediately around the pipes that supply the cooling water will be cooler than 55 degrees Fahrenheit, i.e., cooler than the dew point of the air if the pipes run through the workspace or through air having the same state as the air in the workspace. As a result, moisture from the air may condense on the pipe because the temperature of the surrounding air has fallen to its dew point. Thus, insulation may be required around the cool pipes to prevent such condensation, and condensation might occur in any event, and cause rusting, mold, water pooling, or other problems. Finally, it takes a lot of energy to dehumidify, i.e., to change the water from one state to another.

[0081] The warm air cooling features discussed with respect to FIG. 1 above may, in certain implementations, avoid one or more of these challenges. An exemplary warm air cooling process is shown on the graph of FIG. 3 by points E and F. Point E shows a room-air condition in a workspace that is near the top of, but within, common guidelines for comfort levels for people dressed in summer clothing. See 1997 ASHRAE Handbook – Fundamentals, at page 8.12. That condition is 75°F (24°C), and a relative humidity of about 70 percent (the same as Point A in the prior example). Point F shows heating of that air without the addition of moisture, such as by passing the air over heat-generating computer components in a rack-mounted server system. The temperature rise is 36°F (20°C) to bring the air to a state of 111°F (44°C) at about 23 percent relative humidity. The air may then be cooled to its original temperature (point E) of 75 degrees Fahrenheit in a cooling coil before it is re-introduced to the work space, without adding water to or removing water from the air.

[0082] Points G and H on the graph represent the condition of air in the space immediately surrounding cooling pipes. It is assumed for this example that the cooling supply water is 68 degrees Fahrenheit (20 degrees Celsius) and the return temperature is 104 degrees Fahrenheit (40 degrees Celsius). It is also assumed that the air near the pipes will contain the same moisture level as the rest of the air in the space, and that the air immediately surrounding the pipe takes on the same temperature as the water inside the pipe. As can be seen, this air associate with the cooling water also stays above the saturation point, so that there should be no condensation on the cooling water pipes, and thus no need for insulation to prevent condensation on the pipes.

[0083] It can be seen by this process that the air never becomes saturated. As a result, the system need not provide energy to create a phase change in the air. In addition, the system need not provide liquid recovery structures at the cooling coil, or pipe insulation for anywhere. Other similar temperatures, and in many implementations warmer temperatures, may be used. The particular temperatures discussed here are meant to be exemplary only.

[0084] FIG. 4 is a graph of an inside setpoint temperature for a computing facility over a one year time period. The inside setpoint temperature may be a temperature in a work space such as work space 106 in FIG. 1. As shown in the stepped graph, the inside setpoint temperature (i.e., a targeted temperature) is adjusted infrequently, such as seasonally or monthly, so as to more closely track expected outdoor wetbulb temperatures. The inside setpoint is increased in the summer because the lower winter inside setpoint may be effectively unattainable in warm summer weather by using only evaporative cooling. Thus, while a "best," i.e. lower temperature such as 71°F (22°C), inside setpoint temperature applies in the winter, that same inside setpoint is not realistic, in the example, in summer months.

[0085] The inside setpoint may be manually set by a user and can be adjusted infrequently so as to better approximate a setpoint that is attainable using evaporative cooling techniques with little or no assistance from chillers or other similar components that require relatively high levels of energy to operate. Although increasing the inside setpoint during warmer times of the year may increase the typical operating temperature, it also decreases the amount of thermal cycling that may occur in a facility, and thus lengthen the life of electronic components in the facility. In contrast, if the setpoint is kept as low as possible, the conditioned space would be relatively cool on days having a low wet bulb temperature and relatively warm on days having a high wet bulb temperature. Thus, keeping a constant setpoint throughout the year may actually increase thermal cycling, particularly in warmer months—as the system is able to maintain the setpoint on some days but not on other days. In another embodiment, the cooling units may be controlled to stabilize the difference between their leaving air temperature and their entering water temperature. By applying resets to the cooling plan setpoints, the air

temperature in the work space 106 can be effectively slaved to the temperature of the water from the cooling plant, thereby removing one layer of setpoints to be scheduled.

[0086] The setpoint may also be adjusted substantially continuously, such as by varying the setpoint temperature in an annual sinusoidal manner that generally follows the expected outdoor wet bulb temperature, as shown by the sinusoidal setpoint line. Studies have indicated that human discomfort is minimized by providing many minute changes, or continuous changes, to temperature, as opposed to large step variations in temperature. In both examples the setpoint may be maintained, in certain implementations, even if a lower temperature may readily be achieved (e.g., because the outdoor wet bulb temperature is lower than expected) so as to minimize thermal cycling in a facility being cooled.

[0087] The particular setpoint temperatures may be selected based on the capabilities of the components in a facility and on prevailing local weather conditions. For example, cool weather setpoints may be in the range of 59-77°F (15-25°C), with particular values of 64.4, 68, 71.6, and 75.2°F (18, 20, 22, and 24°C). Warm weather setpoints may be in the range of 68-86°F (20-30°C), with particular values of 71.6, 75.2, 78.8, and 82.4°F (22, 24, 26, ad 28°C). In a particular implementation, warm weather air temperatures in a facility may be approximately 80.6-82.4°F (27-28°C) and cold weather temperature may be about 71.60°F (22°C). The time for resetting the setpoint may also vary, and may be weekly (e.g., using a long range weather forecast to select an achievable setpoint that tracks the predicted wet bulb temperature), weekly, monthly, or quarterly, for example.

[0088] When the wet bulb or air temperature gets too high to achieve the desired inside set point, the temperature of the cooling water may be allowed to drift upward with the outside temperature, causing the temperature in space 106 to move upward also. If the outside temperature rises above a predetermined value, as discussed above, then the temperature inside the data center 101 can be allowed to rise above an inside setpoint, as shown by area 401 in FIG. 4. This rise in the temperature inside the data center can be achieved, as discussed above, by flowing warm water, that is water that is warmer than a predetermined water supply temperature through system 100. Correspondingly, more

water can be circulated through system 100 in order to carry the heat away faster and to compensate for the warm water circulated through the system.

[0089] The rise in temperature inside the data center 101 over the inside setpoint can be limited in time, for example to less than 10% of the operating time of the data center or the equipment, such as less than 5%, less than 1%, or less than 0.5% of the operating time. Likewise, the amount of time that warm water is circulated through the system 100 can be limited in time, for example to less than 1000 hours per year, less than 500 hours per year, less than 100 hours per year, or less than 50 hours per year. If the temperature inside the data center 101 is over the inside setpoint for more than 10% of the operating time of the data center or the equipment or if warm water is circulated for more than 1000 hours per year, the electronic equipment may fail more quickly than desired. For example, the electronic equipment may fail more quickly after running warm water 15% of the annual operating time of the data center or equipment or for 1500 hours.

[0090] FIG. 5 is a flowchart 500 showing steps for cooling a data center using one or more periods of elevated temperatures. The method is exemplary only; other steps may be added, steps may be removed, and the steps may be performed in different orders than those shown, as appropriate. The temperature outside of the data center is monitored (step 502). The leaving air temperature from the data center is monitored (step 503). A determination is made as to whether the temperature outside the data center is above a predetermined value (step 504). When the temperature outside of the data center is not above a predetermined value, the leaving air temperature can be maintained below an inside setpoint by flowing cool water through a cooling system within the data center (step 505). That is, water that is at least as cool as a predetermined water supply temperature is circulated through the data center. When the temperature outside of the data center rises above the predetermined value, the leaving air temperature can be allowed to be greater than the inside setpoint by flowing water through the cooling system that is warmer than the predetermined water supply temperature (step 506).

[0091] FIG. 6 is a flowchart 600 showing steps for cooling a data center using one or more periods of elevated temperatures for less than 90% of the operating time of the data center electronic equipment. The method is exemplary only; other steps may be

added, steps may be removed, and the steps may be performed in different orders than those shown, as appropriate. The temperature outside of the data center is monitored (step 602). When the temperature outside of the data center is not above a predetermined value, the leaving air temperature can be maintained below an inside setpoint by flowing cool water through a cooling system within the data center (step 605). That is, water that is at least as cool as a predetermined water supply temperature is circulated through the data center. When the temperature outside of the data center rises above the predetermined value, the leaving air temperature can be allowed to be greater than the inside setpoint by flowing water through the cooling system that is warmer than the predetermined water supply temperature (step 606). The temperature can maintained below the inside setpoint for more than 90% of the operating time of the electronic equipment.

[0092] Chilled water such as from a chiller may be provided through the modular cooling plant. The chilled water may be blended with cool water so that the inside setpoint may be either maintained or allowed to rise for only a predetermined time. FIG. 7 is a flowchart 700 for cooling a data center having both chilled water and cooled water and using one or more periods of elevated temperatures. The method is exemplary only; other steps may be added, steps may be removed, and the steps may be performed in different orders than those shown, as appropriate. The leaving air temperature is monitored from an on-floor cooling unit in the data center (step 701). The external temperature is monitored (step 703). It is determined whether the external temperature is above a predetermined temperature (step 705). If the external temperature is not above the predetermined temperature, then cooled water is flowed through the data center (step 715). Alternatively, if the external temperature is above a predetermined temperature, then it is determined whether warm water has been circulated through the data center for longer than a predetermined time (step 707). If warm water has not been circulated through the data center for longer than a predetermined time, then warm water is continued to be circulated through the data center (step 709). Alternatively, if warm water has been circulated through the data center for longer than a predetermined time, it is determined whether chilled water should be circulated through the data center (step 711). Chilled water is circulated through the data center (step 713).

[0093] Furthermore, although not shown, additional fans and local fan speed control can be used to maintain the temperature inside the data center. Additional fans can be used to augment the fans in the trays and cooling units. In one embodiment, the fans can collect air from a plurality of racks. In another embodiment, fans can disperse cooled air to a plurality of racks. In another embodiment, a boost fan can be used to make up for pressure drops in the plenums. For example, referring to FIG. 1, if a suction inlet to the fan 110 is much closer to the warm-air plenum 104a than the warm-air plenum 104b, an additional fan can be provided in the path from the warm-air plenum 104b so that the resulting static pressure in the warm-air plenum 104a and the warm-air plenum 104b is approximately equal. If the boost fan is not used, because of pressure drops traversing the plenum in the attic 105, the static pressures in the warm-air plenum 104a and the warm-air plenum 104b could be sufficiently different to either require larger tray fans in the rack 102b or could overdraw air through the rack 102a. y designing a cooling system as described herein, the efficiency of the system can be improved. For example, allowing the temperature inside the data center to rise above the inside setpoint for short periods of time can minimize the need for chillers. Furthermore, using control valves to individually control the flow of water to each on-floor cooling unit such that only the amount of water as is necessary is used, the total amount of water required for the system is reduced by 10-50%. If the plant is designed to provide enough water for all control valves to be wide open all of the time, to provide water at a temperature below the predetermined water supply temperature, and to provide for water lost due to cleaning and/or evaporation, then the plant would need to have more cool water available than necessary except for the warmest times of the year, for example for 30-40 hours per year. However, by allowing the water temperature to rise during short periods and/or at higher flow requirements, the plant can be designed to require less water. Likewise, cooling with relatively warm water may provide certain benefits when chillers are used. In particular, when a chiller is allowed to provide a smaller temperature change to a coolant, e.g., water, the chiller may provide cooling for less electrical consumption per ton of cooling than if it were required to impart a greater temperature change to the coolant. By having elevated air temperatures in a cooled space, that is, the inside the data center and adjacent to the electrical equipment, the supply water temperature may likewise be

higher, and the need for a chiller to cool the water may be less. As a result of these improvements in efficiency and other design parameters discussed herein, the power usage effectiveness of the system, that is, the amount of power entering the data center divided by the power used to run the electronic equipment or servers in the data center, can be less than 1.5, for example less than 1.3, or about 1.2.

[0094] A number of embodiments have been described. Nevertheless, it will be understood that various modifications may be made without departing from the spirit and scope of what is described. For example, the steps of the exemplary flow chart on FIG. 6 may be performed in other orders, some steps may be removed, and other steps may be added. Accordingly, other embodiments are within the scope of the following claims.

WHAT IS CLAIMED IS:

1. A method of cooling a data center during operation of electronic equipment, comprising:

monitoring a temperature outside of the data center;

monitoring a leaving air temperature from an on-floor cooling unit in the data center;

when the temperature outside of the data center is below a predetermined value, maintaining the leaving air temperature below an inside setpoint by flowing water through the on-floor cooling unit, wherein the water is at least as cool as a predetermined water supply temperature;

determining when the temperature outside of the data center rises above the predetermined value; and

when the temperature outside of the data center rises above the predetermined value, allowing the leaving air temperature to be greater than the inside setpoint by flowing water through the on-floor cooling unit that is warmer than the predetermined water supply temperature.

2. The method of claim 1, wherein monitoring the temperature outside the data center includes monitoring a temperature of water supplied from a cooling tower.

3. The method of claim 1, wherein the cooling system comprises a plurality of on-floor cooling units, and wherein monitoring the leaving air temperature comprises monitoring the leaving air temperature of each on-floor cooling unit.

4. The method of claim 3, wherein the cooling system further comprises a plurality of proportioning control valves, each proportioning control valve configured to control the flow of water through a corresponding on-floor cooling unit in response to the leaving air temperature of the corresponding on-floor cooling unit.

5. The method of claim 1, further comprising circulating more water through the on-floor cooling unit when the water is warmer than the predetermined water supply

temperature than when the water is at least as cool as the predetermined water supply temperature.

6. The method of claim 1, further comprising limiting the time of flowing water through the cooling system that is warmer than the predetermined water supply temperature to less than 1000 hours per year.

7. The method of claim 6, wherein the 1000 hours is not consecutive.

8. The method of claim 6, wherein flowing water through the cooling system that is warmer than the predetermined water supply temperature for more than 1500 hours per year shortens the lifetime of the electronic equipment.

9. The method of claim 7, wherein flowing water through the on-floor cooling unit comprises flowing water from a cool water source.

10. The method of claim 8, wherein limiting the time comprises flowing water from a chiller through the on-floor cooling unit after water that is warmer than the predetermined water supply temperature has been circulated for 1000 hours.

11. The method of claim 9, wherein the data center comprises a plurality of on-floor cooling units, and wherein flowing water from a chiller comprises flowing water from the chiller through the plurality of on-floor cooling unit.

12. The method of claim 1, wherein the data center is rated to run on water having a temperature that is less than the predetermined water supply temperature.

13. The method of claim 1, wherein the predetermined water supply temperature is between 65°F and 70°F.

14. A method of cooling a data center during operation of electronic equipment, comprising:

monitoring a temperature outside of the data center;

when the temperature outside of the data center is below a predetermined value, maintaining a temperature within the data center below an inside setpoint by flowing water through a cooling system within the data center, wherein the water is at least as cool as a predetermined water supply temperature;

determining when the temperature outside of the data center rises above the predetermined value; and

when the temperature outside of the data center rises above the predetermined value, allowing the temperature within the data center to be greater than the inside setpoint by flowing water through the cooling system that is warmer than the predetermined water supply temperature,

wherein the temperature within the data center is below the inside setpoint for at least 90% of an operating time of the electronic equipment.

15. The method of claim 14, further comprising monitoring the temperature within the data center to determine when the temperature within the data center is below the inside setpoint.

16. The method of claim 14, wherein flowing water through the cooling system comprises flowing water from a cool water source.

17. The method of claim 16, further comprising flowing water from a chiller through the on-floor cooling unit when the temperature outside of the data center rises above the predetermined value for more than 10% of the operating time of the electronic equipment.

18. The method of claim 17, wherein the data center comprises a plurality of on-floor cooling units, and wherein flowing water from a chiller comprises flowing water from the chiller through the plurality of on-floor cooling unit.

19. The method of claim 14, wherein operating at a temperature within the data center that is higher than the inside setpoint for more than 15% of the operating time of the electronic equipment shortens the lifetime of the electronic equipment.

20. The method of claim 14, wherein the cooling system comprises a plurality of on-floor cooling units, and wherein each on-floor cooling unit comprises a corresponding proportioning control valve configured to control the flow of water through the on-floor cooling unit.

21. The method of claim 14, wherein the data center is rated to run on water that is less than the predetermined water supply temperature.

22. The method of claim 14, wherein the predetermined water supply temperature is between 65°F and 75°F.

23. A system for providing cooled air to electronic equipment, comprising:

a data center having electronic equipment, wherein the electronic equipment is in operation;

a plurality of on-floor cooling units in the data center, wherein the on-floor cooling units cool air warmed by the electronic equipment; and

a cooling water source that is configured to supply cooling water that reduces a temperature of the on-floor cooling units,

wherein the power usage effectiveness ("PUE") of the system is less than 1.3, wherein the PUE is defined by energy used to operate the data center divided by energy used to run the electronic equipment.

24. The system of claim 23, wherein the PUE of the system is about 1.2.

25. The system of claim 23, wherein the cooling water source comprises a cooling tower.

26. The system of claim 23, wherein each on-floor cooling unit comprises a heat exchanger configured to transfer heat from the electronic equipment to the cooling water source.

27. The system of claim 26, wherein the heat exchanger comprises coils located adjacent to one or more common hot air plenums that receive heated air from the electronic equipment.

28. The system of claim 23, wherein the cooling water source is fluidically coupled to the on-floor cooling units.

29. The system of claim 23, further comprising a sensor to monitor the leaving air temperature of an on-floor cooling unit.

30. The system of claim 23, further comprising a plurality of proportioning valves, each proportioning valve configured to control circulation of water through a corresponding on-floor cooling unit.

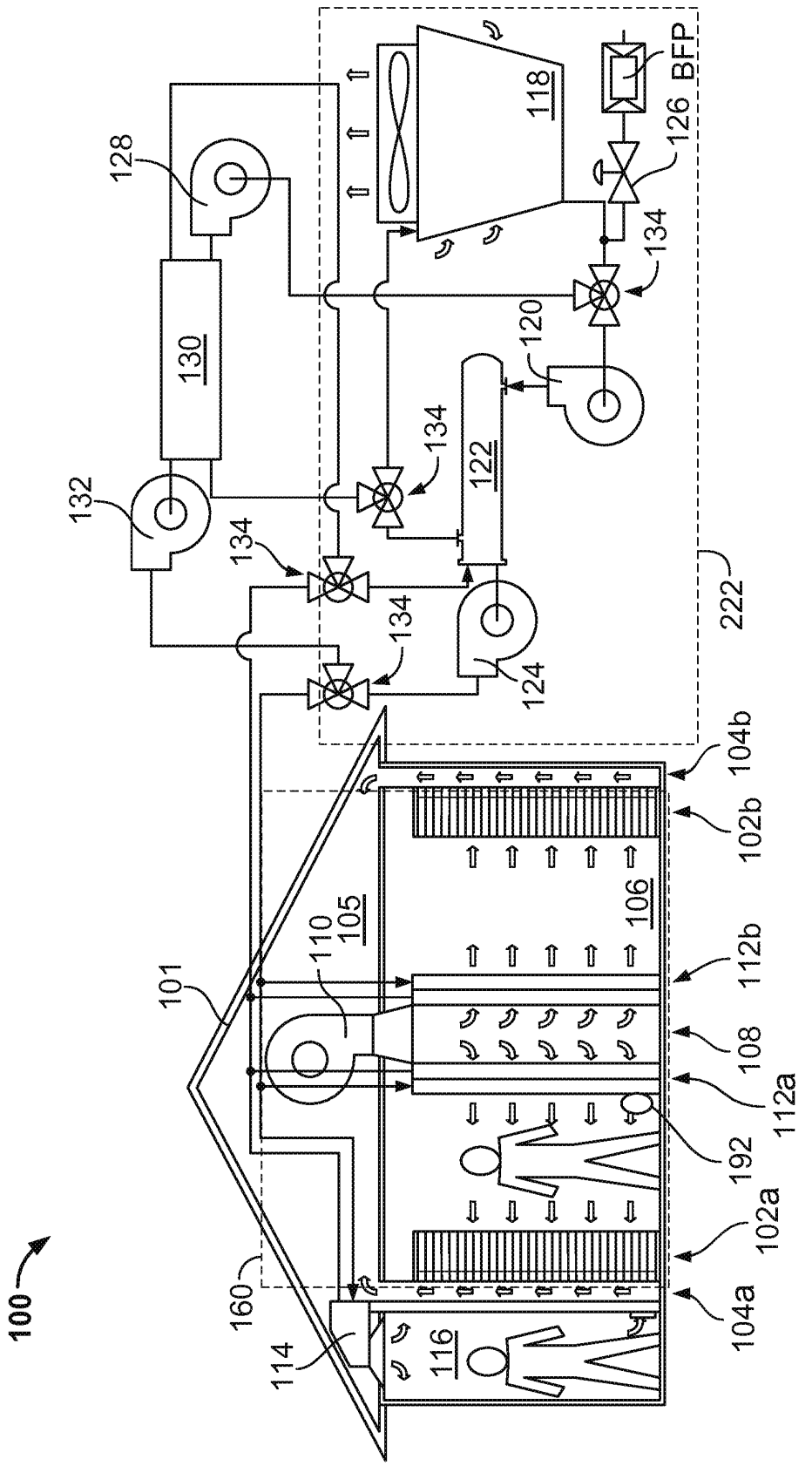
100
101
102a
102b
104a
104b
105
106
108
110
112a
112b
114
116
118
120
122
124
126 BFP
128
130
132
134
160
192
222

FIG. 1

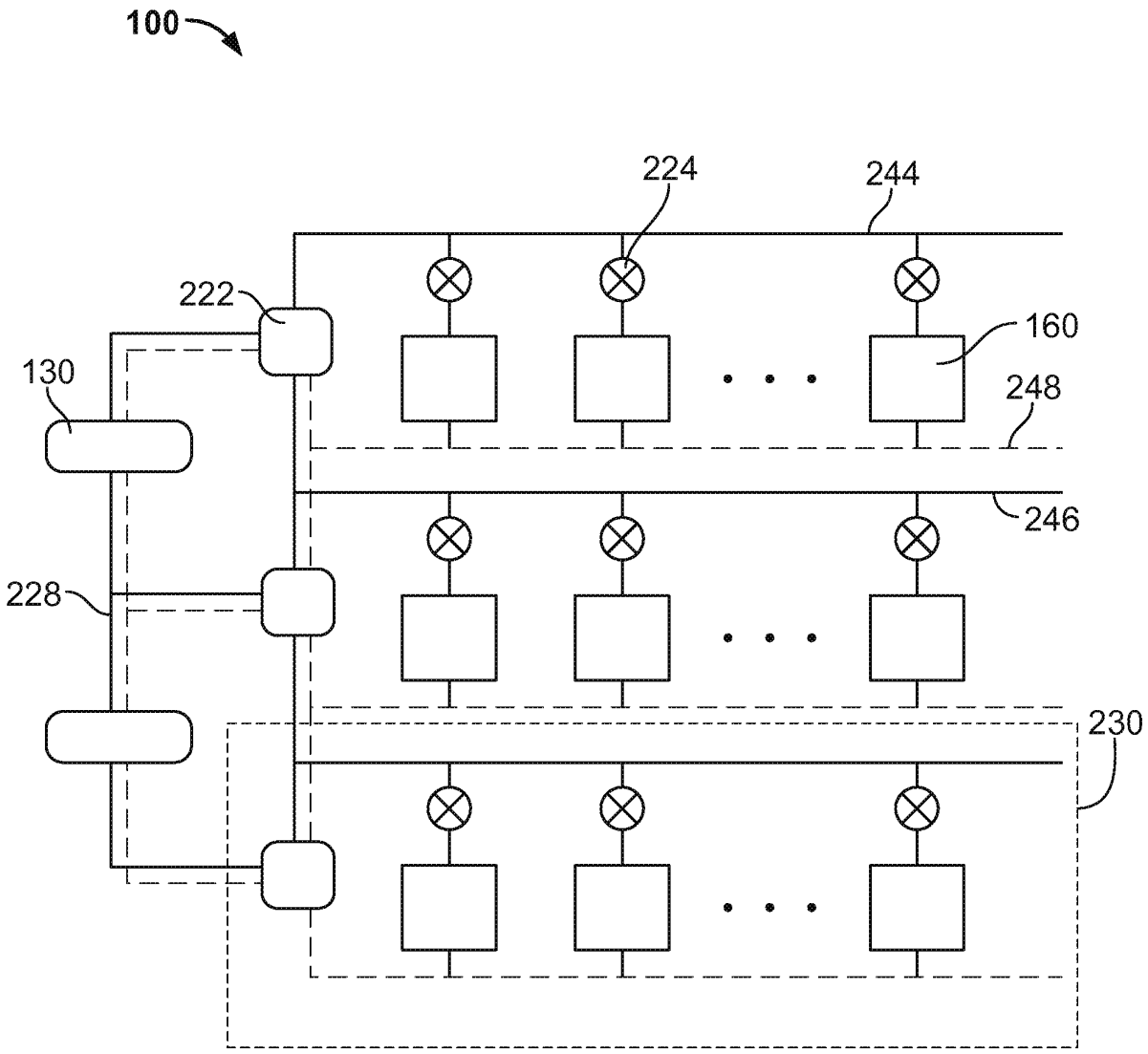

FIG. 2A

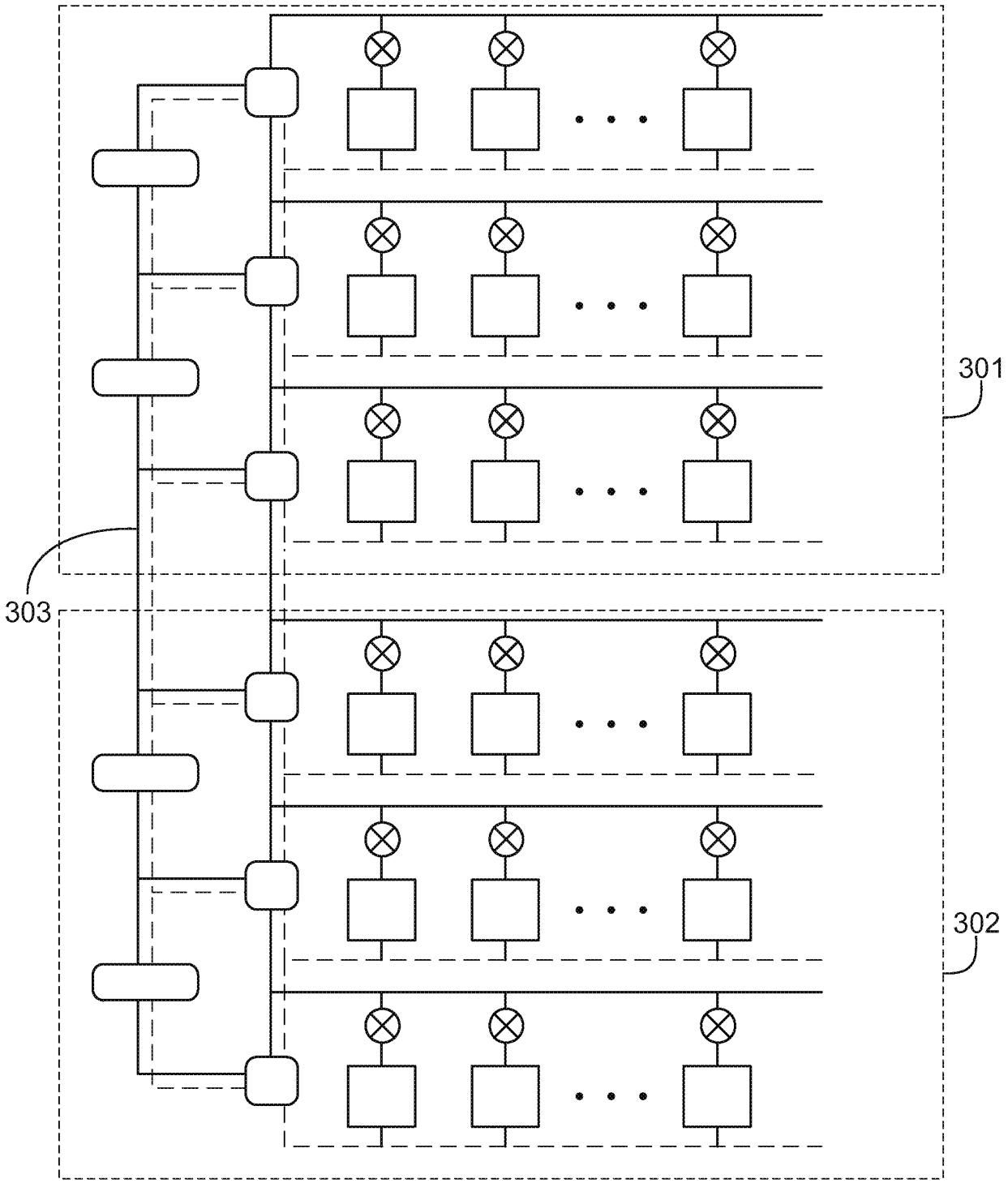

FIG. 2B

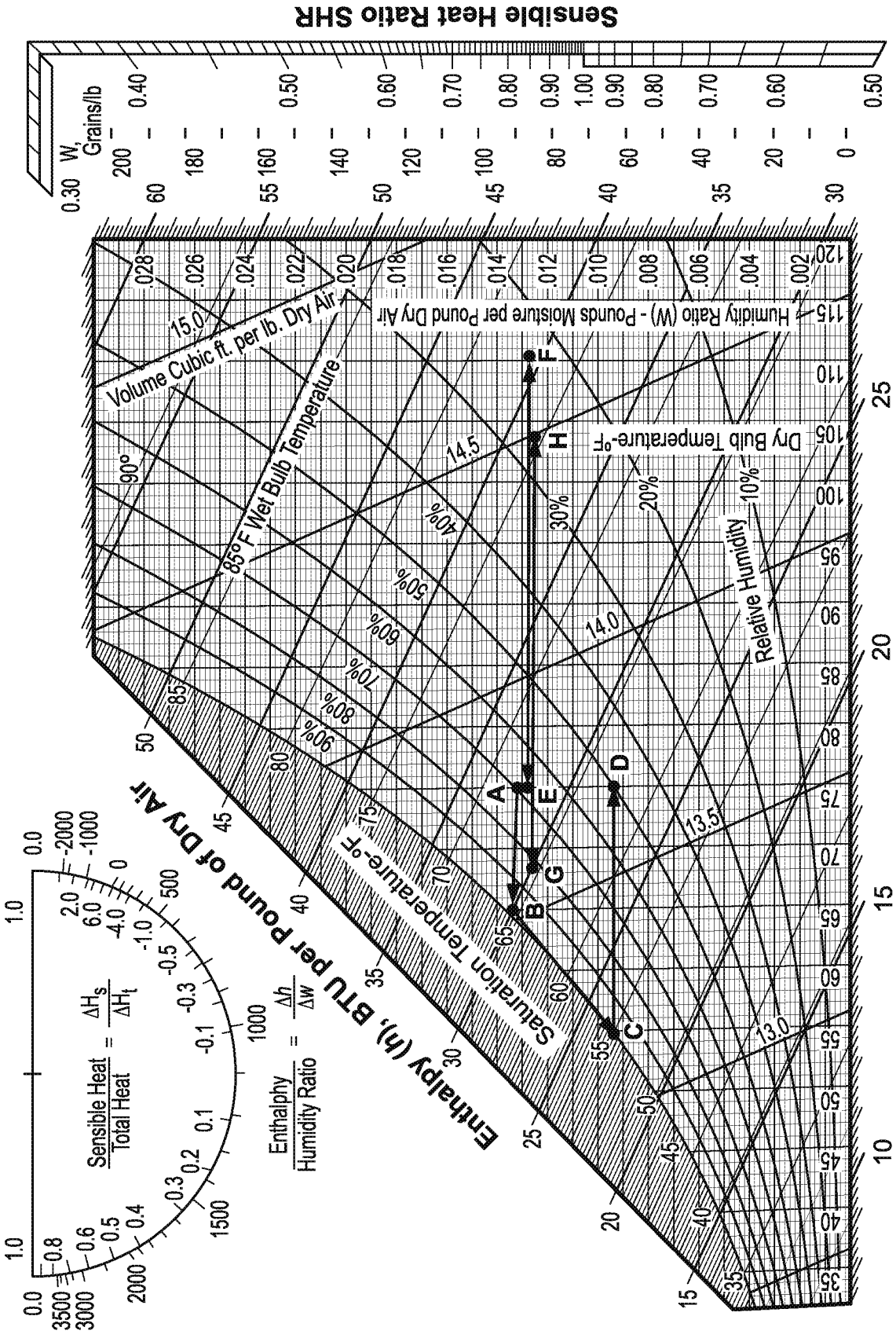
Sensible Heat Ratio SHR
W, Grains/lb
Humidity Ratio (W) - Pounds Moisture per Pound Dry Air
Dry Bulb Temperature-°F
Enthalpy (h), BTU per Pound of Dry Air
Volume Cubic ft. per lb. Dry Air
85° F Wet Bulb Temperature
Saturation Temperature-°F
Relative Humidity
Sensible Heat / Total Heat = ΔHs / ΔHt
Enthalpy / Humidity Ratio = Δh / Δw
A
B
C
D
E
F
G
H

FIG. 3

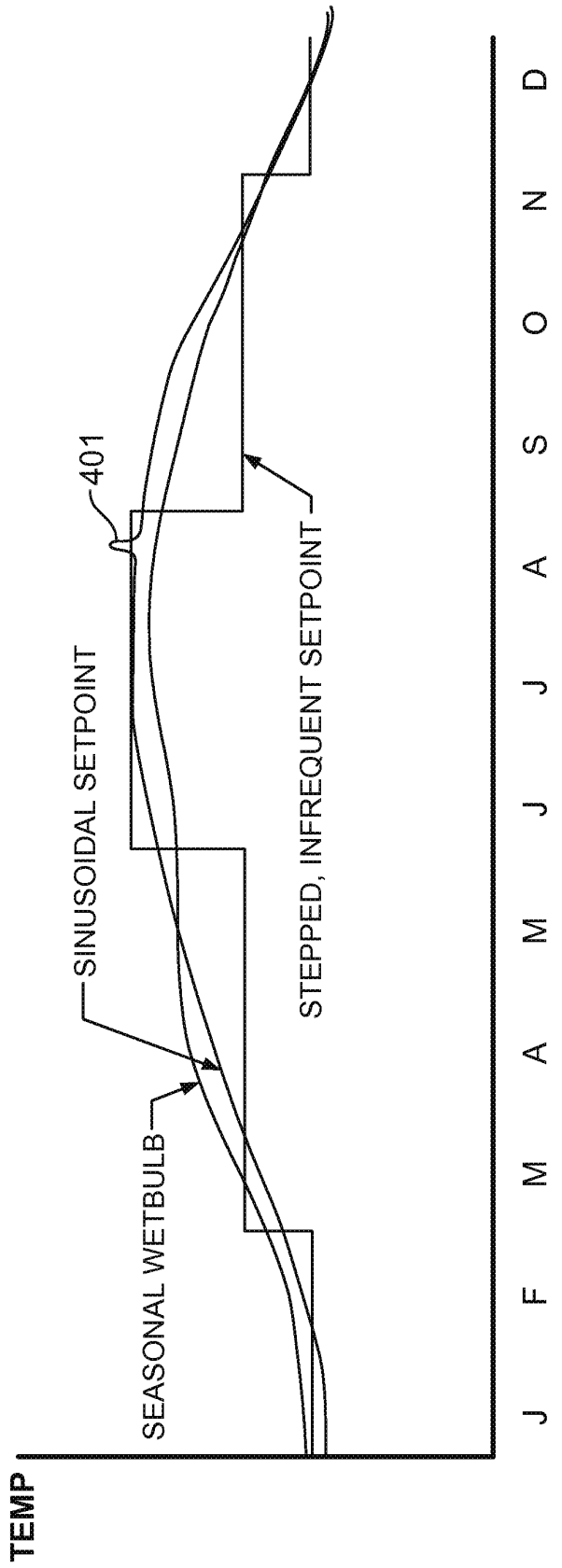
TEMP
J F M A M J J A S O N D
SEASONAL WETBULB
SINUSOIDAL SETPOINT
401
STEPPED, INFREQUENT SETPOINT

FIG. 4

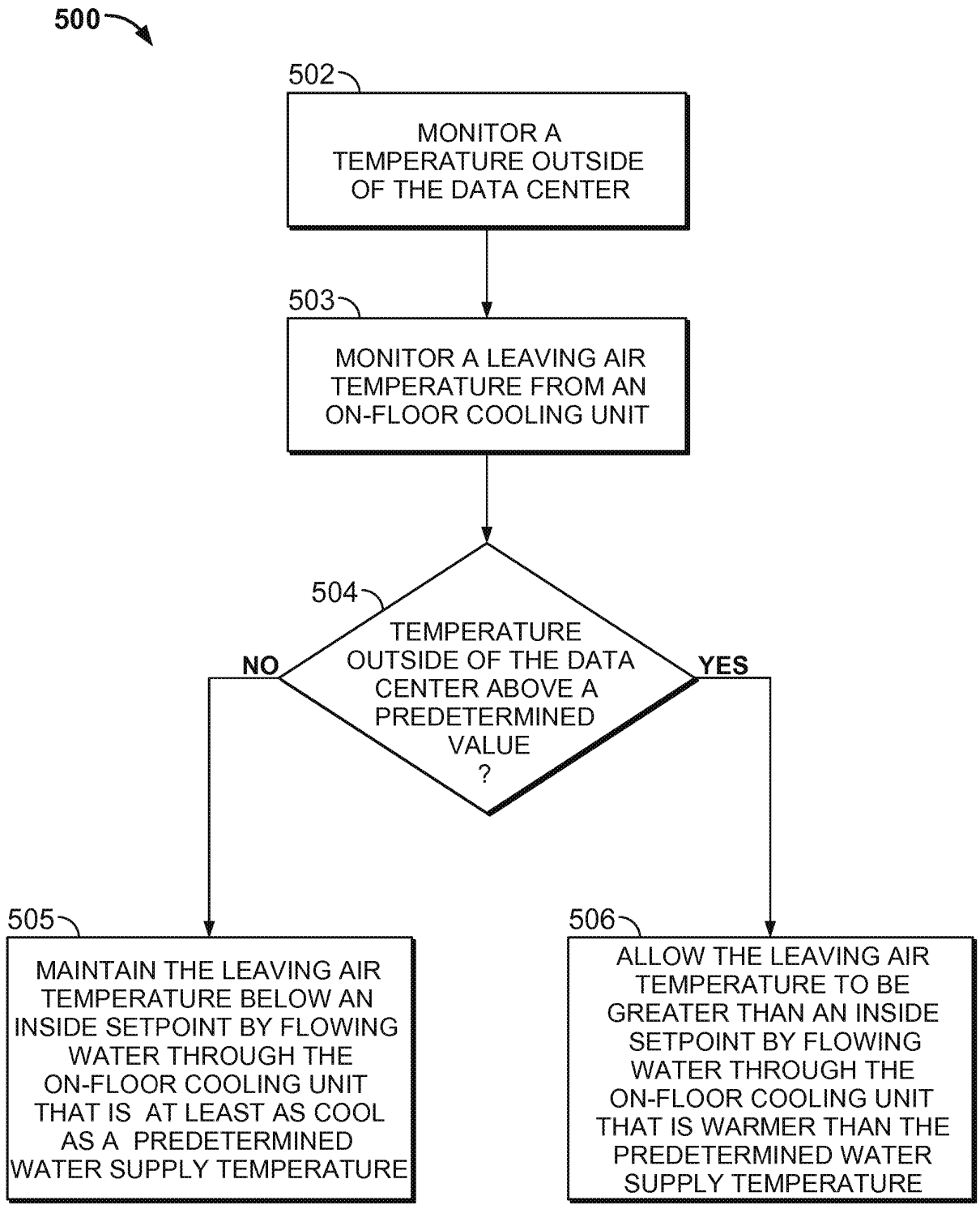
500
502
MONITOR A TEMPERATURE OUTSIDE OF THE DATA CENTER
503
MONITOR A LEAVING AIR TEMPERATURE FROM AN ON-FLOOR COOLING UNIT
504
TEMPERATURE OUTSIDE OF THE DATA CENTER ABOVE A PREDETERMINED VALUE ?
NO
YES
505
MAINTAIN THE LEAVING AIR TEMPERATURE BELOW AN INSIDE SETPOINT BY FLOWING WATER THROUGH THE ON-FLOOR COOLING UNIT THAT IS AT LEAST AS COOL AS A PREDETERMINED WATER SUPPLY TEMPERATURE
506
ALLOW THE LEAVING AIR TEMPERATURE TO BE GREATER THAN AN INSIDE SETPOINT BY FLOWING WATER THROUGH THE ON-FLOOR COOLING UNIT THAT IS WARMER THAN THE PREDETERMINED WATER SUPPLY TEMPERATURE

FIG. 5

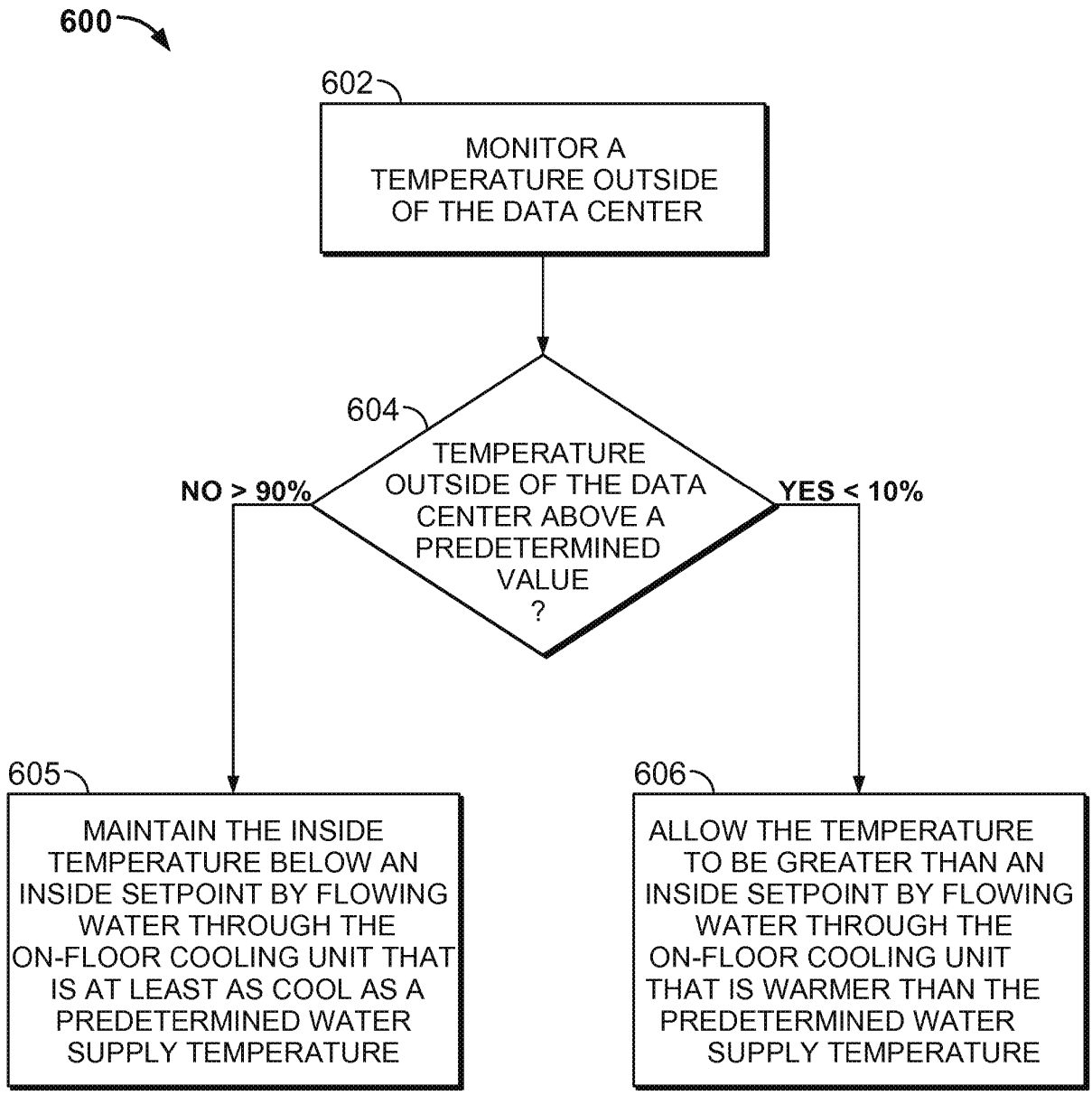
600
602
MONITOR A TEMPERATURE OUTSIDE OF THE DATA CENTER
604
TEMPERATURE OUTSIDE OF THE DATA CENTER ABOVE A PREDETERMINED VALUE ?
NO > 90%
YES < 10%
605
MAINTAIN THE INSIDE TEMPERATURE BELOW AN INSIDE SETPOINT BY FLOWING WATER THROUGH THE ON-FLOOR COOLING UNIT THAT IS AT LEAST AS COOL AS A PREDETERMINED WATER SUPPLY TEMPERATURE
606
ALLOW THE TEMPERATURE TO BE GREATER THAN AN INSIDE SETPOINT BY FLOWING WATER THROUGH THE ON-FLOOR COOLING UNIT THAT IS WARMER THAN THE PREDETERMINED WATER SUPPLY TEMPERATURE

FIG. 6

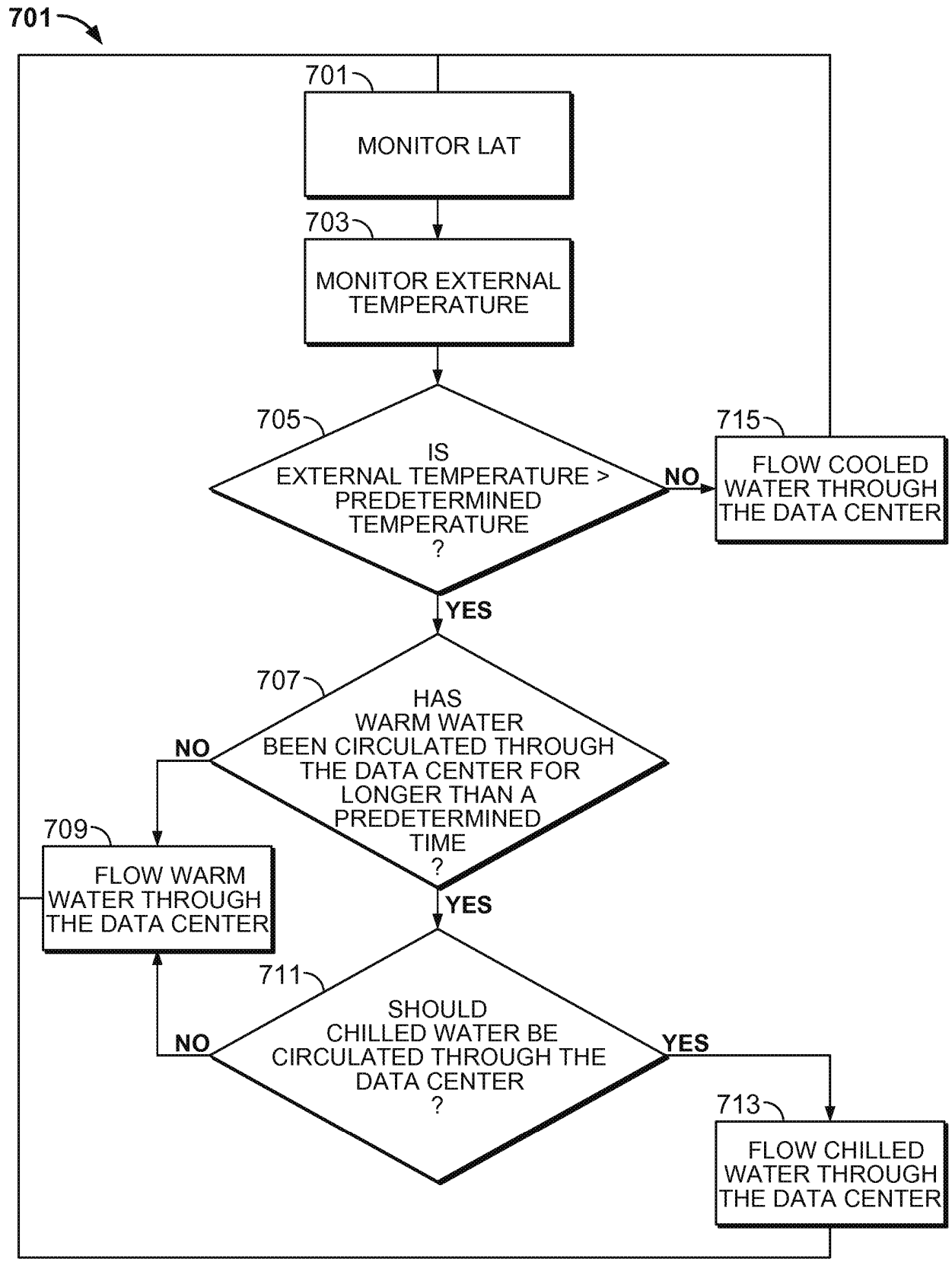
701
701
MONITOR LAT
703
MONITOR EXTERNAL TEMPERATURE
705
IS EXTERNAL TEMPERATURE > PREDETERMINED TEMPERATURE ?
NO
715
FLOW COOLED WATER THROUGH THE DATA CENTER
YES
707
HAS WARM WATER BEEN CIRCULATED THROUGH THE DATA CENTER FOR LONGER THAN A PREDETERMINED TIME ?
NO
709
FLOW WARM WATER THROUGH THE DATA CENTER
YES
711
SHOULD CHILLED WATER BE CIRCULATED THROUGH THE DATA CENTER ?
NO
YES
713
FLOW CHILLED WATER THROUGH THE DATA CENTER

FIG. 7

UNITED STATES PATENT AND TRADEMARK OFFICE

UNITED STATES DEPARTMENT OF COMMERCE
United States Patent and Trademark Office
Address: COMMISSIONER FOR PATENTS
P.O. Box 1450
Alexandria, Virginia 22313-1450
www.uspto.gov

APPLICATION NO.	FILING DATE	FIRST NAMED INVENTOR	ATTORNEY DOCKET NO.	CONFIRMATION NO.
12/611,061	11/02/2009	Andrew B. Carlson	16113-1629001	1708

26222 7590 09/15/2011
FISH & RICHARSON P.C.
P.O. BOX 1022
MINNEAPOLIS, MN 55440-1022

EXAMINER	
TYLER, CHERYL JACKSON	

ART UNIT	PAPER NUMBER
3744	

NOTIFICATION DATE	DELIVERY MODE
09/15/2011	ELECTRONIC

Please find below and/or attached an Office communication concerning this application or proceeding.

The time period for reply, if any, is set in the attached communication.

Notice of the Office communication was sent electronically on above-indicated "Notification Date" to the following e-mail address(es):

PATDOCTC@fr.com

UNITED STATES PATENT AND TRADEMARK OFFICE

Commissioner for Patents
United States Patent and Trademark Office
P.O. Box 1450
Alexandria, VA 22313-1450
www.uspto.gov

FISH & RICHARSON P.C.
P.O. BOX 1022
MINNEAPOLIS MN 55440-1022

In re Application of:
CARLSON, ANDREW B.
Application No.: 12/611,061
Filed: March 18, 2010
Docket: 16113-1629001
Title: DATA CENTER WITH LOW POWER USAGE EFFECTIVENESS

DECISION ON REQUEST TO PARTICIPATE IN PATENT PROSECUTION HIGHWAY PILOT PROGRAM AND PETITION TO MAKE SPECIAL UNDER 37 CFR 1.102(a)

This is a decision on the request to participate in the Patent Prosecution Highway (PPH) pilot program and the petition under 37 CFR 1.102(a), filed August 16, 2011 to make the above-identified application special. The required petition fee under 37 CFR 1.17(h) was charged to the deposit account as authorized.

The request and petition are **dismissed**

A grantable request to participate in the PPH pilot program and petition to make special require:

(1) The U.S. application must validly claim priority under 35 U.S.C. 119(a) to one or more applications filed in the KIPO;
(2) Applicant must submit a copy of the allowable/patentable claim(s) from the KIPO application(s) along with an English translation thereof and a statement that the English translation is accurate;
(3) All the claims in the U.S. application must sufficiently correspond or be amended to sufficiently correspond to the allowable/patentable claim(s) in the KIPO application(s);
(4) Examination of the U.S. application has not begun;
(5) Applicant must submit a copy of all the office actions from each of the KIPO application(s) containing the allowable/patentable claim(s) along with an English translation thereof and a statement that the English translation is accurate; and
(6) Applicant must submit an IDS listing the documents cited by the KIPO examiner in the KIPO office action along with copies of documents except U.S. patents or U.S. patent application publications.

The request to participate in the PPH pilot program and petition do not comply with the above requirements. The request to participate in the PPH program and petition fails to include Item #6.

With regard to Item #6, a copy of cited prior art references from the KIPO is required. In particular, a copy of cited JP 2005-191544 A and JP 2006-208000A is required.

Applicant is given a time period of **ONE MONTH or THIRTY DAYS**, whichever is longer, from the mailing date of this decision to correct the deficiencies. **NO EXTENSION OF TIME UNDER 37 CFR 1.136 IS PERMITTED.** If the deficiencies are not corrected with the time period given, the application will await action in its regular turn. Currently, the application is undergoing pre-examination processing. The application will be forwarded to the examiner for action in its regular turn.

Telephone inquiries concerning this decision should be directed to Henry C. Yuen at 571-272-4856.

Petition is **dismissed**.

/Henry C. Yuen/

_____

Henry C. Yuen, Special Programs Examiner
Technology Center 3700 – Mechanical Engineering,
Manufacturing and Products
571-272-4856

UNITED STATES PATENT AND TRADEMARK OFFICE

UNITED STATES DEPARTMENT OF COMMERCE
United States Patent and Trademark Office
Address: COMMISSIONER FOR PATENTS
P.O. Box 1450
Alexandria, Virginia 22313-1450
www.uspto.gov

APPLICATION NO.	FILING DATE	FIRST NAMED INVENTOR	ATTORNEY DOCKET NO.	CONFIRMATION NO.
12/611,061	11/02/2009	Andrew B. Carlson	16113-1629001	1708

26222 7590 09/28/2011

FISH & RICHARSON P.C.
P.O. BOX 1022
MINNEAPOLIS, MN 55440-1022

EXAMINER	
TYLER, CHERYL JACKSON	

ART UNIT	PAPER NUMBER
3744	

NOTIFICATION DATE	DELIVERY MODE
09/28/2011	ELECTRONIC

Please find below and/or attached an Office communication concerning this application or proceeding.

The time period for reply, if any, is set in the attached communication.

Notice of the Office communication was sent electronically on above-indicated "Notification Date" to the following e-mail address(es):

PATDOCTC@fr.com

UNITED STATES PATENT AND TRADEMARK OFFICE

Commissioner for Patents
United States Patent and Trademark Office
P.O. Box 1450
Alexandria, VA 22313-1450
www.uspto.gov

FISH & RICHARSON P.C.
P.O. BOX 1022
MINNEAPOLIS MN 55440-1022

In re Application of:
CARLSON, ANDREW B.
Serial No.: 12/611,061
Filed: 11/02/09
Attorney Docket No. 16113-1629001
Title: DATA CENTER WITH LOW POWER USAGE EFFECTIVENESS

: DECISION ON A REQUEST TO PARTICIPATE IN PATENT PCT/PROSECUTION HIGHWAY PROGRAM AND PETITION TO MAKE SPECIAL UNDER CFR 1.102(a)

This is a decision on the request to participate in the Patent Prosecution Highway (PPH) program and the petition under 37 CFR 1.102(a), filed Sep. 23, 2011 to make the above-identified application special.

The request and petition are granted.

A grantable request to participate in the PPH pilot program and petition to make special require:

(1) The U.S. application must validly claim priority under 35 U.S.C. 119(a) to one or more applications filed in the KIPO;
(2) Applicant must submit a copy of the allowable/patentable claim(s) from the KIPO application(s);
(3) All the claims in the U.S. application must sufficiently correspond or be amended to sufficiently correspond to the allowable/patentable claim(s) in the KIPO application(s);
(4) Examination of the U.S. application has not begun;
(5) Applicant must submit a copy of all the office actions from each of the KIPO application(s) containing the allowable/patentable claim(s) along with an English translation thereof and a statement that the English translation is accurate; and
(6) Applicant must submit an IDS listing the documents cited by the KIPO examiner in the KIPO office action along with copies of documents except U.S. patents or U.S. patent application publications.

In light of the petition being properly submitted, the request to participate in the PPH program and the petition comply with the above requirements. Accordingly, the above-identified application has been accorded "special" status.

The applicant is encouraged to cite and submit all relevant prior art references, if any, to facilitate examination in this application.

Other inquiries concerning the examination or status of the application should be directed to Cheryl Tyler, the SPE of Art Unit 37444 at 571-272-4834for Class 62/259 and also accessible in the PAIR system at http://www.uspto.gov/ebc.index.html.

All other inquiries concerning the examination or status of the application should be directed to the Patent Application Information Retrieval (PAIR) system.

This application will be forwarded and docketed to an examiner for action on the merits commensurate with this decision. Telephone inquiries concerning this decision should be directed to Henry C. Yuen, at 571-272-4856.

The petition is **granted.**

/Henry C. Yuen/

_____

Henry C. Yuen, Special Programs Examiner
Technology Center 3700 – Mechanical Engineering,
Manufacturing and Products
571-272-4856

Doc Code: PET.AUTO **Document Description: Petition automatically granted by EFS-Web**	PTO/SB/83 U.S. Patent and Trademark Office Department of Commerce

Electronic Petition Request	**REQUEST FOR WITHDRAWAL AS ATTORNEY OR AGENT AND CHANGE OF CORRESPONDENCE ADDRESS**
Application Number	12611062
Filing Date	02-Nov-2009
First Named Inventor	William Pfenninger
Art Unit	1717
Examiner Name	MARIANNE PADGETT
Attorney Docket Number	ULPH-015/02US 175021-2066
Title	Luminescent Materials that Emit Light in the Visible Range or the Near Infrared Range

◉ Please withdraw me as attorney or agent for the above identified patent application and the practitioners of record associated with Customer Number: 23419

The reason(s) for this request are those described in 37 CFR:

10.40(b)(4)

Certifications

☒ I/We have given reasonable notice to the client, prior to the expiration of the response period, that the practitioner(s) intend to withdraw from employment

☒ I/We have delivered to the client or a duly authorized representative of the client all papers and property (including funds) to which the client is entitled

☒ I/We have notified the client of any responses that may be due and the time frame within which the client must respond

Change the correspondence address and direct all future correspondence to the first named inventor or assignee that has properly made itself of record pursuant to 37 CFR 3.71:

Name	Ultradots, Inc.
Address	1030 Hamilton Court
City	Menlo Park
State	CA
Postal Code	94025
Country	US

I am authorized to sign on behalf of myself and all withdrawing practitioners.	
Signature	/William S. Galliani/
Name	William S. Galliani
Registration Number	33885

UNITED STATES PATENT AND TRADEMARK OFFICE

Commissioner for Patents
United States Patent and Trademark Office
P.O. Box 1450
Alexandria, VA 22313-1450
www.uspto.gov

Decision Date : February 13, 2012

In re Application of :

William Pfenninger

Application No : 12611062

Filed : 02-Nov-2009

Attorney Docket No : ULPH-015/02US 175021-2066

DECISION ON REQUEST TO WITHDRAW AS ATTORNEY/AGENTOF RECORD

This is an electronic decision on the Request to Withdraw as attorney or agent of record under 37 CFR § 1.36(b), filed February 13, 2012

The request is **APPROVED.**

The request was signed by William S. Galliani (registration no. 33885) on behalf of all attorneys/agents associated with Customer Number 23419 . All attorneys/agents associated with Cusotmer Number 23419 have been withdrawn.

Since there are no remaining attorneys of record, all future communications from the Office will be directed to the first named inventor or assignee that has properly made itself of record pursuant to 37 CFR 3.71, with correspondence address:

Name Ultradots, Inc.
Name2
Address 1 1030 Hamilton Court
Address 2
City Menlo Park
State CA
Postal Code 94025
Country US

As a reminder, requester is required to inform the first named inventor or assignee that has properly made itself of record pursuant to 37 CFR 3.71 of the electronically processed petition.

Telephone inquiries concerning this decision should be directed to the Patent Electronic Business Center (EBC) at 866-217-9197.

Office of Petitions

Doc Code: PPH.PCT.652
Document Description: Petition to make special under PCT-Patent Pros Hwy

PTO/SB/20PCT-KR (06-10)
Approved for use through 01/31/2012. OMB 0651-0058
U.S. Patent and Trademark Office; U. S. DEPARTMENT OF COMMERCE
Under the Paperwork Reduction Act of 1995, no persons are required to respond to a collection of information unless it displays a valid OMB control number.

REQUEST FOR PARTICIPATION IN THE PATENT COOPERATION TREATY - PATENT PROSECUTION HIGHWAY (PCT-PPH) PILOT PROGRAM BETWEEN THE KOREAN INTELLECTUAL PROPERTY OFFICE (KIPO) AND THE USPTO

Application No:	12/611,069	Filing date:	November 2, 2009
First Named Inventor:	Andrew B. Carlson		
Title of the Invention:	Data Center Cooling		

THIS REQUEST FOR PARTICIPATION IN THE PCT-PPH PILOT PROGRAM ALONG WITH THE REQUIRED DOCUMENTS MUST BE SUBMITTED VIA EFS-WEB. INFORMATION REGARDING EFS-WEB IS AVAILABLE AT HTTP://WWW.USPTO.GOV/EBC/EFS_HELP.HTML

APPLICANT HEREBY REQUESTS PARTICIPATION IN THE PCT-PPH PROGRAM AND PETITIONS TO MAKE THE ABOVE-IDENTIFIED APPLICATION SPECIAL UNDER THE PCT-PPH PROGRAM.

The above-identified application is (1) a national stage entry of the corresponding PCT application, or (2) a national stage entry of another PCT application which claims priority to the corresponding PCT application, or (3) a national application that claims domestic/ foreign priority to the corresponding PCT application, or (4) a national application which forms the basis for the priority claim in the corresponding PCT application, or (5) a continuing application of a U.S. application that satisfies one of (1) to (4) above, or (6) a U.S. application that claims domestic benefit to a U.S. provisional application which forms the basis for the priority claim in the corresponding PCT application.

The corresponding PCT application number(s) is/are: PCT/US2010/055139

The international filing date of the corresponding PCT application(s) is/are: November 2, 2010

I. List of Required Documents:

a. **A copy of the latest international work product (WO/ISA, WO/IPEA, or IPER) in the above–identified corresponding PCT application(s)**

☐ Is attached.

☑ Is not attached because the document is already in the U.S. application.

b. **A copy of all claims which were indicated as having novelty, inventive step and industrial applicability in the above-identified corresponding PCT application(s).**

☑ Is attached.

☐ Is not attached because the document is already in the U.S. application.

c. **English translations of the documents in a. and b. above are attached (if the documents are not in the English language). A statement that the English translation is accurate is attached for the document in b. above.**

This collection of information is required by 35 U.S.C. 119, 37 CFR 1.55, and 37 CFR 1.102(d). The information is required to obtain or retain a benefit by the public, which is to file (and by the USPTO to process) an application. Confidentiality is governed by 35 U.S.C. 122 and 37 CFR 1.11 and 1.14. This collection is estimated to take 2 hours to complete, including gathering, preparing, and submitting the completed application form to the USPTO. Time will vary depending upon the individual case. Any comments on the amount of time you require to complete this form and/or suggestions for reducing this burden should be sent to the Chief Information Officer, U.S. Patent and Trademark Office, U.S. Department of Commerce, P.O. Box 1450, Alexandria, VA 22313-1450. DO NOT SEND FEES OR COMPLETED FORMS TO THIS ADDRESS.

PTO/SB/20PCT-KR (06-10)
Approved for use through 01/31/2012. OMB 0651-0058
U.S.Patent and Trademark Office; U.S. DEPARTMENT OF COMMERCE
Under the Paperwork Reduction Act of 1995, no persons are required to respond to a collection of information unless it displays a valid OMB control number.

REQUEST FOR PARTICIPATION IN THE PCT-PPH PILOT PROGRAM BETWEEN THE KIPO AND THE USPTO

(continued)

Application No.:	12/611,069
First Named Inventor:	Andrew B. Carlson

d. **(1) An information disclosure statement listing the documents cited in the international work products (ISR, WO/ISA, WO/IPEA, IPER) of the corresponding PCT application.**

☐ Is attached

☑ Has already been filed in the above-identified U.S. application on August 3, 2011

(2) Copies of all documents (except) for U.S. patents or U.S. patent application publications)

☐ Are attached.

☑ Have already been filed in the above-identified U.S. application on August 3, 2011

II. Claims Correspondence Table:

Claims in US Application	Patentable Claims in the corresponding PCT Application	Explanation regarding the correspondence
1-8	1-8	Claims 1-8 in US Application have been canceled.
9-20	9-20	Claims 9-20 in US application substantially conform to
		(with minor amendments to typographical errors)
		claims 9-20 in PCT/US2010/055139, indicated as patentable.
21-45		Claims 21-45 in US application, added by preliminary amendment filed herewith,
		are new and depend (directly or indirectly) from one of claims 9 or 15,
		indicated as patentable in PCT/US2010/055139.

III. All the claims in the US application sufficiently correspond to the patentable claims in the corresponding PCT application.

Signature /Matthew K. Wernli/	Date August 16, 2011
Name (Print/Typed) Matthew K. Wernli	Registration Number 63,173

Privacy Act Statement

The **Privacy Act of 1974 (P.L. 93-579)** requires that you be given certain information in connection with your submission of the attached form related to a patent application or patent. Accordingly, pursuant to the requirements of the Act, please be advised that: (1) the general authority for the collection of this information is 35 U.S.C. 2(b)(2); (2) furnishing of the information solicited is voluntary; and (3) the principal purpose for which the information is used by the U.S. Patent and Trademark Office is to process and/or examine your submission related to a patent application or patent. If you do not furnish the requested information, the U.S. Patent and Trademark Office may not be able to process and/or examine your submission, which may result in termination of proceedings or abandonment of the application or expiration of the patent.

The information provided by you in this form will be subject to the following routine uses:

1. The information on this form will be treated confidentially to the extent allowed under the Freedom of Information Act (5 U.S.C. 552) and the Privacy Act (5 U.S.C 552a). Records from this system of records may be disclosed to the Department of Justice to determine whether disclosure of these records is required by the Freedom of Information Act.
2. A record from this system of records may be disclosed, as a routine use, in the course of presenting evidence to a court, magistrate, or administrative tribunal, including disclosures to opposing counsel in the course of settlement negotiations.
3. A record in this system of records may be disclosed, as a routine use, to a Member of Congress submitting a request involving an individual, to whom the record pertains, when the individual has requested assistance from the Member with respect to the subject matter of the record.
4. A record in this system of records may be disclosed, as a routine use, to a contractor of the Agency having need for the information in order to perform a contract. Recipients of information shall be required to comply with the requirements of the Privacy Act of 1974, as amended, pursuant to 5 U.S.C. 552a(m).
5. A record related to an International Application filed under the Patent Cooperation Treaty in this system of records may be disclosed, as a routine use, to the International Bureau of the World Intellectual Property Organization, pursuant to the Patent Cooperation Treaty.
6. A record in this system of records may be disclosed, as a routine use, to another federal agency for purposes of National Security review (35 U.S.C. 181) and for review pursuant to the Atomic Energy Act (42 U.S.C. 218(c)).
7. A record from this system of records may be disclosed, as a routine use, to the Administrator, General Services, or his/her designee, during an inspection of records conducted by GSA as part of that agency's responsibility to recommend improvements in records management practices and programs, under authority of 44 U.S.C. 2904 and 2906. Such disclosure shall be made in accordance with the GSA regulations governing inspection of records for this purpose, and any other relevant (*i.e.*, GSA or Commerce) directive. Such disclosure shall not be used to make determinations about individuals.
8. A record from this system of records may be disclosed, as a routine use, to the public after either publication of the application pursuant to 35 U.S.C. 122(b) or issuance of a patent pursuant to 35 U.S.C. 151. Further, a record may be disclosed, subject to the limitations of 37 CFR 1.14, as a routine use, to the public if the record was filed in an application which became abandoned or in which the proceedings were terminated and which application is referenced by either a published application, an application open to public inspection or an issued patent.
9. A record from this system of records may be disclosed, as a routine use, to a Federal, State, or local law enforcement agency, if the USPTO becomes aware of a violation or potential violation of law or regulation.

(12) INTERNATIONAL APPLICATION PUBLISHED UNDER THE PATENT COOPERATION TREATY (PCT)

(19) World Intellectual Property Organization
International Bureau

(43) International Publication Date
5 May 2011 (05.05.2011)

PCT

(10) International Publication Number
WO 2011/053988 A2

(51) International Patent Classification:
F24F 11/02 (2006.01) *F24F 7/10* (2006.01)
F24F 7/06 (2006.01) *F25B 41/04* (2006.01)

(21) International Application Number:
PCT/US2010/055139

(22) International Filing Date:
2 November 2010 (02.11.2010)

(25) Filing Language: English

(26) Publication Language: English

(30) Priority Data:
12/611,069 2 November 2009 (02.11.2009) US

(71) Applicant *(for all designated States except US)*: **EXAFLOP LLC** [US/US]; 1600 Amphitheatre Parkway, Mountain View, CA 94043 (US).

(72) Inventor; and

(75) Inventor/Applicant *(for US only)*: **CARLSON, Andrew B.** [US/US]; 53 Parker Avenue, Atherton, CA 94027 (US).

(74) Agents: **WERNLI, Matthew, K.** et al.; Fish & Richardson P.C., P.O. Box 1022, Minneapolis, MN 55440-1022 (US).

(81) Designated States *(unless otherwise indicated, for every kind of national protection available)*: AE, AG, AL, AM, AO, AT, AU, AZ, BA, BB, BG, BH, BR, BW, BY, BZ, CA, CH, CL, CN, CO, CR, CU, CZ, DE, DK, DM, DO, DZ, EC, EE, EG, ES, FI, GB, GD, GE, GH, GM, GT, HN, HR, HU, ID, IL, IN, IS, JP, KE, KG, KM, KN, KP, KR, KZ, LA, LC, LK, LR, LS, LT, LU, LY, MA, MD, ME, MG, MK, MN, MW, MX, MY, MZ, NA, NG, NI, NO, NZ, OM, PE, PG, PH, PL, PT, RO, RS, RU, SC, SD, SE, SG, SK, SL, SM, ST, SV, SY, TH, TJ, TM, TN, TR, TT, TZ, UA, UG, US, UZ, VC, VN, ZA, ZM, ZW.

(84) Designated States *(unless otherwise indicated, for every kind of regional protection available)*: ARIPO (BW, GH, GM, KE, LR, LS, MW, MZ, NA, SD, SL, SZ, TZ, UG, ZM, ZW), Eurasian (AM, AZ, BY, KG, KZ, MD, RU, TJ, TM), European (AL, AT, BE, BG, CH, CY, CZ, DE, DK, EE, ES, FI, FR, GB, GR, HR, HU, IE, IS, IT, LT, LU, LV, MC, MK, MT, NL, NO, PL, PT, RO, RS, SE, SI, SK, SM, TR), OAPI (BF, BJ, CF, CG, CI, CM, GA, GN, GQ, GW, ML, MR, NE, SN, TD, TG).

Declarations under Rule 4.17:

— *as to applicant's entitlement to apply for and be granted a patent (Rule 4.17(ii))*

— *as to the applicant's entitlement to claim the priority of the earlier application (Rule 4.17(iii))*

Published:

— *without international search report and to be republished upon receipt of that report (Rule 48.2(g))*

(54) **Title**: DATA CENTER COOLING

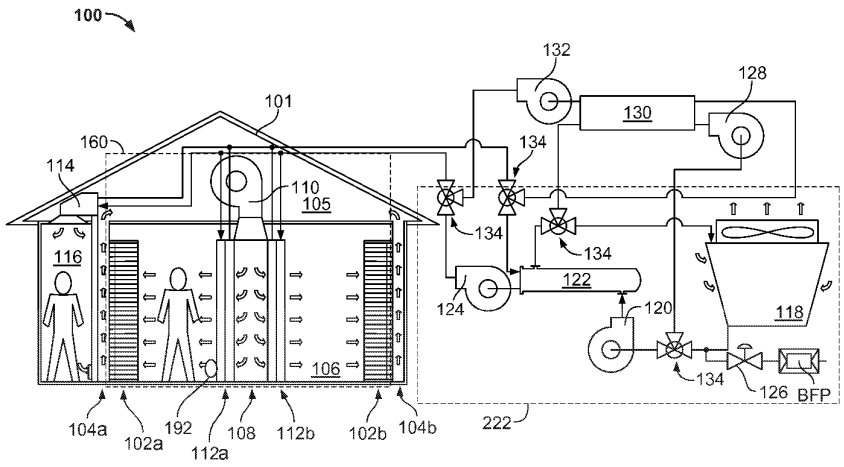

FIG. 1

(57) **Abstract**: A system for cooling air in a data center includes a data center having electronic equipment in operation, a cooling water source, and a plurality of on-floor cooling units. The cooling water source is configured to retain at maximum capacity a total amount of water. Each on-floor cooling unit is configured to cool air heated by a portion of the electronic equipment in the data center using water from the cooling water source. The total amount of water is insufficient to maintain a leaving air temperature of each on-floor cooling unit below an inside setpoint when a temperature outside of the data center is above a predetermined external temperature.

WO 2011/053988 A2

DATA CENTER COOLING

CROSS-REFERENCE TO RELATED APPLICATION

[0001] This application claims priority under 35 U.S.C. § 119(3) to U.S. Application Serial No. 12/611,069, filed on November 2, 2009, entitled DATA CENTER COOLING, the disclosure of which is incorporated herein by reference.

TECHNICAL FIELD

[0002] This document relates to systems and methods for providing cooling for areas containing electronic equipment, such as computer server rooms and server racks in computer data centers.

BACKGROUND

[0003] Computer users often focus on the speed of computer microprocessors (e.g., megahertz and gigahertz). Many forget that this speed often comes with a cost—higher electrical power consumption. For one or two home PCs, this extra power may be negligible when compared to the cost of running the many other electrical appliances in a home. But in data center applications, where thousands of microprocessors may be operated, electrical power requirements can be very important.

[0004] Power consumption is also, in effect, a double whammy. Not only must a data center operator pay for electricity to operate its many computers, but the operator must also pay to cool the computers. That is because, by simple laws of physics, all the power has to go somewhere, and that somewhere is, for the most part, conversion into heat. A pair of microprocessors mounted on a single motherboard can draw 200-400 watts or more of power. Multiply that figure by several thousand (or tens of thousands) to account for the many computers in a large data center, and one can readily appreciate the amount of heat that can be generated. It is much like having a room filled with thousands of burning floodlights.

[0005] Thus, the cost of removing all of the heat can also be a major cost of operating large data centers. That cost typically involves the use of even more energy, in the form of electricity and natural gas, to operate chillers, condensers, pumps, fans, cooling towers, and other related components. Heat removal can also be important because, although microprocessors may not be as sensitive to heat as are people,

increases in heat generally can cause great increases in microprocessor errors and failures. In sum, such a system may require electricity to run the chips, and more electricity to cool the chips.

SUMMARY

[0006] In general, in one aspect, a system for providing cooled air to a data center includes a data center having electronic equipment in operation, a cooling water source, a plurality of on-floor cooling units in the data center, a plurality of proportioning control valves, and a controller. Each on-floor cooling unit is configured to cool air warmed by a sub-set of the electronic equipment in the data center. Each proportioning control valve is associated with a single on-floor cooling unit. Each proportioning control valve is configured to turn in response to a signal from the controller, the valve able to be fully closed, fully open, or partially open. When the valve is closed, water is blocked from the on-floor cooling unit. When the valve is fully open, a maximum volume of water is circulated through the on-floor cooling unit. When the valve is partially open, some percent less than 100% of the maximum amount of water is circulated through the on-floor cooling unit. The controller is configured to turn the corresponding control valve in response to a change in temperature.

[0007] This and other embodiments can optionally include one or more of the following features. The controller can be configured to turn the corresponding control valve in response to a change in a leaving air temperature of the corresponding on-floor cooling unit. The controller can be configured to turn the corresponding control valve such that the leaving temperature of the corresponding on-floor cooling unit remains below an inside setpoint for at least 90% of the operating time of the system. The system can further include a plurality of sensors, each sensor configured to measure the leaving air temperature of an on-floor cooling unit. The proportioning valve can act independently of any other control valve. The cooling water source can include a cooling tower. Each on-floor cooing unit can include a heat exchanger configured to transfer heat from the electronic equipment to the cooling water source. The heat exchange can include coils located adjacent to one or more common hot air plenums that receive heated air from the electronic equipment.

[0008] In general, in one aspect, a system for providing cooled air to electronic equipment includes a data center having electronic equipment in operation,

a plurality of modules connected by a first head, and at least one chiller connected by a second header. Each module includes a plurality of on-floor cooling units in the data center and a cooling water source. The at least one chiller is in fluid connection with one or more than one module in the plurality of modules.

[0009] This and other embodiments can optionally include one or more of the following features. The number of chillers can be less than the number of modules. Each on-floor cooling unit can include a corresponding proportioning control valve configured to control the flow of water through the on-floor cooling unit. The cooling water source can be a cooling tower. Each on-floor cooling unit can include a heat exchanger configured to transfer heat from the electronic equipment to the cooling water source. The heat exchanger can include coils located adjacent to one or more common hot air plenums that receive heated air from the electronic equipment.

[0010] In general, in one aspect, a system for cooling air in a data center includes a data center having electronic equipment in operation, a cooling water source, and a plurality of on-floor cooling units. The cooling water source is configured to retain at maximum capacity a total amount of water. Each on-floor cooling unit is configured to cool air heated by a portion of the electronic equipment in the data center using water from the cooling water source. The total amount of water is insufficient to maintain a leaving air temperature of each on-floor cooling unit below an inside setpoint when a temperature outside of the data center is above a predetermined external temperature.

[0011] This and other embodiments can optionally include one or more of the following features. The cooling water source can be a cooling tower. Each on-floor cooling unit can include a heat exchanger configured to transfer heat from the electronic equipment to the cooling water source. The heat exchanger can include coils located adjacent to one or more common hot air plenums that receive heated air from the electronic equipment. The system can be is located in a geographical region, and for at least 90% of a year, temperatures outside of the data center can be below the predetermined external temperature. At least 95% of the year, temperatures outside of the data center can be below the predetermined external temperature.

[0012] Advantages of the systems and methods described herein may include one or more of the following. If the temperature inside the data center is allowed to rise above the inside setpoint for short periods of time, then the use of expensive chillers can be minimized. By monitoring the leaving air temperature, e.g. the

temperature of the air leaving a the cooling coil or cool air plenum of the on-floor cooling unit, rather than the temperature of individual servers, the temperature indication will be more accurate, making the cooling system more efficient. If control valves are configured to individually control the flow of water to each on-floor cooling unit, the total amount of water required for the system can be reduced. By connecting chillers to a separate header, corresponding modules, e.g. modules which include a series of cooling units, control valves, and a modular cooling plant, can remain on-line even when the corresponding modular cooling plant fails.

[0013] The details of one or more embodiments are set forth in the accompanying drawings and the description below. Other features and advantages will be apparent from the description and drawings, and from the claims.

DESCRIPTION OF DRAWINGS

[0014] FIG. 1 is a schematic diagram showing a system for cooling a computer data center.

[0015] FIG. 2A is a schematic diagram showing a system for cooling server racks in a data center.

[0016] FIG. 2B is a schematic diagram showing two different plants, each having a system for cooling server racks in a data center.

[0017] FIG. 3 is a psychometric chart showing a heating and cooling cycle for air in a data center.

[0018] FIG. 4 is a graph of setpoint temperature for a computing facility over a one year time period.

[0019] FIG. 5 is a flowchart showing steps for cooling a data center by measuring the leaving air temperature and accounting for elevated temperatures during limited times of the year.

[0020] FIG. 6 is a flowchart showing steps for cooling a data center using one or more periods of elevated temperatures for less than 90% of the operating time of the data center electronic equipment.

[0021] FIG. 7 is a flowchart for cooling a data center having both chilled water and cooled water and using one or more periods of elevated temperatures

[0022] Like reference symbols in the various drawings indicate like elements.

DETAILED DESCRIPTION

[0023] FIG. 1 is a schematic diagram showing a system 100 for cooling a computer data center 101. The system 100 generally includes an on-floor cooling unit 160 having an air handling unit (including e.g., fan 110 and cooling coils 112a, 112b) for transferring heat from the data center's air to cooling water. System 100 can also include a modular cooling plant 222. Modular cooling plant 222 can include a power and cooling unit ("PCU") having pumps 124, 120, valves 134, filters (not shown), and a heat exchanger 122 for removing heat from the cooling water and passing it to condenser water that is delivered to a cooling tower 118 in modular cooling plant 222. The cooling tower 118 in modular cooling plant 222 a cooling water tower, a dry cooler including only a fan coil unit, or a hybrid tower including both a cooling water tower and a dry cooler. Alternatively, a cool water source such as a lake or bay can be used instead of a cooling tower 118. The cooling water 118 in modular cooling plant 222 passes the accumulated heat to the ambient air through evaporation and cooling of the cooling tower water to create cooled water. In general operation, the system 100 operates using only the cooling tower/heat exchanger/cooling coil system, though a powered refrigeration system such as a chiller may be used to provide chilled water during peak loads, such as when the outdoor ambient dew point is very high and the cooling tower cannot provide sufficient cooling alone. As explained below, control parameters for the system may also be set so as to avoid most or any need for the use of chillers or other such powered refrigeration systems.

[0024] The temperatures of each portion of the system 100 are selected to be relatively high (compared to conventional refrigeration-based cooling systems), so as to permit more efficient operation of the system 100. For example, relatively high air temperatures in the system (e.g., air entering a cooling coil over 110°F (43.3°C) and exiting the coil at a temperature above 70°F (21.11°C)) may in turn permit for relatively high cooling water temperatures (e.g., water entering a cooling coil around 68°F (20°C) and exiting around 104°F (40°C)) because the amount of heat that can be taken out of the air is generally proportional to the difference in temperature between the water and the air. If the difference can be kept at an acceptable level, where the temperatures are high enough that evaporative cooling (e.g., cooling through a cooling tower, without further cooling via chiller) is sufficient, the relatively high electrical cost of operating a chiller (or many chillers) may be avoided.

[0025] High system temperatures may be particularly advantageous in certain implementations when hybrid cooling towers are used. Such hybrid cooling towers combine the functionality of an ordinary cooling tower with a water-to-water heat exchanger. Using a sufficiently high temperature setpoint, i.e. the maximum temperature at which the data center 101 is allowed to operate for the majority of the operating time of the electronic equipment, may allow the hybrid tower to provide substantial cooling capacity, even when operating in a water-to-air mode without utility water. As a result, a hybrid cooling tower may be used to provide cooling capacity to a facility relatively quickly, even before utility water may be obtained in large volumes. The capacity of the cooling tower may be directly related to the difference in the temperature of the water within it to the ambient outside air.

[0026] When the difference in temperatures is not very large, a change of only a few degrees can bring substantial gains in efficiency. For example, where the cooling water enters at 68°F (20°C), by heating air to 113°F (45°C) rather than 104°F (40°C), the temperature difference is increased from 36°F to 45°F (20°C to 45°C)—which may result in an increase in heat flow of 25 percent. The actual difference will vary slightly, as the entering conditions for air and water are not the only conditions (because the air cools as it passes through a cooling coil, and the water warms); this example, however, indicates how the difference in temperature can affect efficiency of a system.

[0027] Use of elevated temperatures in a system may also prevent air in or around the system from falling below its liquid saturation point, i.e., its dew point, and condensing. This may, in certain circumstances, provide benefits both in efficiency and in operation of the system. Efficiency benefits may be obtained because creating condensation requires much more energy than simply cooling air, so that systems creating condensation may use a large amount of electricity or other energy. Improvements in operation of the system may occur because, if pipes in the system carry water that is below the saturation temperature of the air around the pipes, condensation might form on the pipes. That condensation can damage the pipes or equipment in the conditioned space, cause mold, and cause water to pool on the floor, and can require the installation of insulation on the pipes (to stop the condensation).

[0028] In the system shown in FIG. 1, use of elevated temperatures may substantially reduce, or almost entirely eliminate, the need for energy-intensive cooling components such as chillers and the like, even where the heat load in the data

center 101 is very high. As a result, system 100 may be operated at a lower operating cost than could otherwise be achieved. In addition, lower capital costs may be required, because fans, coils, heat exchangers, and cooling towers are relatively basic and inexpensive components. In addition, by operating with a higher temperature difference between cooled air and cooling water, less volume of cooling water is needed, thus reducing the size and cost of piping, and the cost to operate pumps and other such components.

[0029] In addition, those components are often very standardized, so that their acquisition costs are lower, and they are more easily located, particularly in developing countries and remote areas where it may be beneficial to place a data center 101. Use of system 100 in remote areas and other areas with limited access to electrical power is also helped by the fact that system 100 may be operated using less electrical power. As a result, such a system can be located near lower-power electrical sub-stations and the like. As discussed more completely below, lower-powered systems may also be amenable to being implemented as self-powered systems using energy sources such as solar, wind, natural-gas powered turbines, fuel cells, and the like.

[0030] Referring now to FIG. 1, there is shown a data center 101 in sectional view, which as shown, is a building that houses a large number of computers or similar heat-generating electronic components. A workspace 106 is defined around the computers, which are arranged in a number of parallel rows and mounted in vertical racks, such as racks 102a, 102b. The racks may include pairs of vertical rails to which are attached paired mounting brackets (not shown). Trays containing computers, such as standard circuit boards in the form of motherboards, may be placed on the mounting brackets.

[0031] In one example, the mounting brackets may be angled rails welded or otherwise adhered to vertical rails in the frame of a rack, and trays may include motherboards that are slid into place on top of the brackets, similar to the manner in which food trays are slid onto storage racks in a cafeteria, or bread trays are slid into bread racks. The trays may be spaced closely together to maximize the number of trays in a data center, but sufficiently far apart to contain all the components on the trays and to permit air circulation between the trays.

[0032] Other arrangements may also be used. For example, trays may be mounted vertically in groups, such as in the form of computer blades. The trays may

simply rest in a rack and be electrically connected after they are slid into place, or they may be provided with mechanisms, such as electrical traces along one edge, that create electrical and data connections when they are slid into place.

[0033] Air may circulate from workspace 106 across the trays and through on-floor cooling unit 160. Although only one on-floor cooling unit 160 is shown in FIG. 160, data center 101 can include multiple on-floor cooling units 160. On-floor cooling unit 160 includes warm-air plenums 104a, 104b behind the trays. The air may be drawn into the trays by fans mounted at the back of the trays (not shown). The fans may be programmed or otherwise configured to maintain a set exhaust temperature for the air into the warm air plenum, and may also be programmed or otherwise configured to maintain a particular temperature rise across the trays. Where the temperature of the air in the work space 106 is known, controlling the exhaust temperature also indirectly controls the temperature rise. The work space 106 may, in certain circumstances, be referenced as a "cold aisle," and the plenums 104a, 104b as "warm aisles."

[0034] The temperature rise can be large. For example, the work space 106 temperature may be about 77°F (25 °C) and the exhaust temperature into the warm-air plenums 104a, 104b may be set to 113°F (45 °C), for a 36°F (20 °C)) rise in temperature. The exhaust temperature may also be as much as 212 °F (100°C) where the heat generating equipment can operate at such elevated temperature. For example, the temperature of the air exiting the equipment and entering the warm-air plenum may be 118.4, 122, 129.2, 136.4, 143.6, 150.8, 158, 165, 172.4, 179.6, 186.8, 194, 201, or 208.4°F (48, 50, 54, 58, 62, 66, 70, 74, 78, 82, 86, 90, 94, or 98 °C). Such a high exhaust temperature generally runs contrary to teachings that cooling of heat-generating electronic equipment is best conducted by washing the equipment with large amounts of fast-moving, cool air. Such a cool-air approach does cool the equipment, but also uses a lot of energy.

[0035] Cooling of particular electronic equipment, such as microprocessors, may be improved even where the flow of air across the trays is slow, by attaching impingement fans to the tops of the microprocessors or other particularly warm components, or by providing heat pipes and related heat exchangers for such components.

[0036] The heated air may be routed upward into a ceiling area, or attic 105, or into a raised floor or basement, or other appropriate space, and may be gathered

there by air handling units that include, for example, fan 110 of on-floor cooling unit 160, which may include, for example, one or more centrifugal fans appropriately sized for the task. The fan 110 may then deliver the air back into a plenum 108 located adjacent to the workspace 106. The plenum 108 may be simply a bay-sized area in the middle of a row of racks, that has been left empty of racks, and that has been isolated from any warm-air plenums on either side of it, and from cold-air work space 106 on its other sides. Alternatively, air may be cooled by coils defining a border of warm-air plenums 104a, 104b and expelled directly into workspace 106, such as at the tops of warm-air plenums 104a, 104b.

[0037] On-floor cooling unit 160 can also have cooling coils 112a, 112b located on opposed sides of the plenum approximately flush with the fronts of the racks. (The racks in the same row as the plenum 108, coming in and out of the page in the figure, are not shown.) The coils may have a large surface area and be very thin so as to present a low pressure drop to the system 100. In this way, slower, smaller, and quieter fans may be used to drive air through the system. Protective structures such as louvers or wire mesh may be placed in front of the coils 112a, 112b to prevent them from being damaged.

[0038] In operation, fan 110 of on-floor cooling unit 160 pushes air down into plenum 108, causing increased pressure in plenum 108 to push air out through cooling coils 112a, 112b. As the air passes through the coils 112a, 112b, its heat is transferred into the water in the coils 112a, 112b, and the air is cooled.

[0039] The speed of the fan 110 and/or the flow rate or temperature of cooling water flowing in the cooling coils 112a, 112b may be controlled in response to measured values. For example, the pumps driving the cooling liquid may be variable speed pumps that are controlled to maintain a particular temperature in work space 106. Such control mechanisms may be used to maintain a constant temperature in workspace 106 or plenums 104a, 104b and attic 105.

[0040] The workspace 106 air may then be drawn into racks 102a, 102b such as by fans mounted on the many trays that are mounted in racks 102a, 102b. This air may be heated as it passes over the trays and through power supplies running the computers on the trays, and may then enter the warm-air plenums 104a, 104b. Each tray may have its own power supply and fan or fans. In some implementation, the power supply is located at the back edge of the tray, and the is fan attached to the back of the power supply. All of the fans may be configured or programmed to deliver air

at a single common temperature, such as at a set 113°F (45°C). The process may then be continuously readjusted as fan 110 captures and circulates the warm air.

[0041] Additional items may also be cooled using system 100. For example, room 116 is provided with a self-contained fan-coil unit 114 which contains a fan and a cooling coil. The unit 114 may operate, for example, in response to a thermostat provided in room 116. Room 116 may be, for example, an office or other workspace ancillary to the main portions of the data center 101.

[0042] In addition, supplemental cooling may also be provided to room 116 if necessary. For example, a standard roof-top or similar air-conditioning unit (not shown) may be installed to provide particular cooling needs on a spot basis. As one example, system 100 may be designed to deliver 78°F (25.56°C) supply air to work space 106, and workers may prefer to have an office in room 116 that is cooler. Thus, a dedicated air-conditioning unit may be provided for the office. This unit may be operated relatively efficiently, however, where its coverage is limited to a relatively small area of a building or a relatively small part of the heat load from a building. Also, cooling units, such as chillers, may provide for supplemental cooling, though their size may be reduced substantially compared to if they were used to provide substantial cooling for the system 100.

[0043] Fresh air may be provided to the workspace 106 by various mechanisms. For example, a supplemental air-conditioning unit (not shown), such as a standard roof-top unit may be provided to supply necessary exchanges of outside air. Also, such a unit may serve to dehumidify the workspace 106 for the limited latent loads in the system 100, such as human perspiration. Alternatively, louvers may be provided from the outside environment to the system 100, such as powered louvers to connect to the warm air plenum 104b. System 100 may be controlled to draw air through the plenums when environmental (outside) ambient humidity and temperature are sufficiently low to permit cooling with outside air. Such louvers may also be ducted to fan 110, and warm air in plenums 104a, 104b may simply be exhausted to atmosphere, so that the outside air does not mix with, and get diluted by, the warm air from the computers. Appropriate filtration may also be provided in the system, particularly where outside air is used.

[0044] Also, the workspace 106 may include heat loads other than the trays, such as from people in the space and lighting. Where the volume of air passing through the various racks is very high and picks up a very large thermal load from

multiple computers, the small additional load from other sources may be negligible, apart from perhaps a small latent heat load caused by workers, which may be removed by a smaller auxiliary air conditioning unit as described above.

[0045] Cooling water may be provided from modular cooling plant 222 that can include a cooling water circuit and a condenser water circuit. Cooling water circuit can be powered by pump 124. The cooling water circuit may be formed as a direct-return, or indirect-return, circuit, and may generally be a closed-loop system. Pump 124 may take any appropriate form, such as a standard centrifugal pump. Heat exchanger 122 may remove heat from the cooling water in the circuit. Heat exchanger 122 may take any appropriate form, such as a plate-and-frame heat exchanger or a shell-and-tube heat exchanger.

[0046] Heat may be passed from the cooling water circuit to a condenser water circuit that includes heat exchanger 122, pump 120, and cooling tower 118. Pump 120 may also take any appropriate form, such as a centrifugal pump. Cooling tower 118 may be, for example, one or more forced draft towers or induced draft towers. The cooling tower 118 may be considered a free cooling source, because it requires power only for movement of the water in the system and in some implementations the powering of a fan to cause evaporation; it does not require operation of a compressor in a chiller or similar structure.

[0047] The cooling tower 118 may take a variety of forms, including as a hybrid cooling tower. Such a tower may combine both the evaporative cooling structures of a cooling tower with a water-to-water heat exchanger. As a result, such a tower may be fit in a smaller face and be operated more modularly than a standard cooling tower with separate heat exchanger. Additional advantage may be that hybrid towers may be run dry, as discussed above. In addition, hybrid towers may also better avoid the creation of water plumes that may be viewed negatively by neighbors of a facility.

[0048] As shown, the fluid circuits may create an indirect water-side economizer arrangement. This arrangement may be relatively energy efficient, in that the only energy needed to power it is the energy for operating several pumps and fans. In addition, this system may be relatively inexpensive to implement, because pumps, fans, cooling towers, and heat exchangers are relatively technologically simple structures that are widely available in many forms. In addition, because the structures are relatively simple, repairs and maintenance may be less expensive and easier to

complete. Such repairs may be possible without the need for technicians with highly specialized knowledge.

[0049] Alternatively, direct free cooling may be employed, such as by eliminating heat exchanger 122, and routing cooling tower water (condenser water) directly to cooling coils 112a, 112b (not shown). Such an implementation may be more efficient, as it removes one heat exchanging step. However, such an implementation also causes water from the cooling tower 118 to be introduced into what would otherwise be a closed system. As a result, the system in such an implementation may be filled with water that may contain bacteria, algae, and atmospheric contaminants, and may also be filled with other contaminants in the water. A hybrid tower, as discussed above, may provide similar benefits without the same detriments.

[0050] Control valve 126 is provided in the condenser water circuit to supply make-up water to the circuit. Make-up water may generally be needed because cooling tower 118 operates by evaporating large amounts of water from the circuit. The control valve 126 may be tied to a water level sensor in cooling tower 118, or to a basin shared by multiple cooling towers. When the water falls below a predetermined level, control valve 126 may be caused to open and supply additional makeup water to the circuit. A back-flow preventer (BFP) may also be provided in the make-up water line to prevent flow of water back from cooling tower 118 to a main water system, which may cause contamination of such a water system.

[0051] Although FIG. 1 shows the modular cooling plant 222 connected to only one on-floor cooling unit 160, a modular cooling plant 222 can be connected to a number of on-floor cooling units 160, as shown in FIG. 2A, with the on-floor cooling units 160 connected in parallel to the modular cooling plant 222. Each modular cooling plant 222 can serve, for example, 12 or more on-floor cooling units 160. Furthermore, system 100 can have a number of modular cooling plants 222. System 100 can be, for example, a building using 30 megawatts (MW) of electrical power. There can then be a number of modular cooling plants 222 connected to the building, for example fifteen modular cooling plants 222 each providing cooling for each 2MW of electrical power used by the data center.

[0052] The modular cooling plants 222 and on-floor cooling units 222 can be connected through ladder pipes 244. Supply line 246 can supply cool water to the on-floor cooling units, while return line 248 can return warm water to the modular

cooling plants 222 to be cooled. Along at least one pipe is a corresponding control valve 224 located so that flow to a single cooling unit can be controlled. The modular cooling plant 222, corresponding cooling units 160, and control valves 224 can together be called a module 230. Each control valve 224 can control the flow of water through the corresponding on-floor cooling unit 160 without affecting the other cooling units in the module. The control valves 224 can provide only the water that the particular on-floor cooling unit 160 needs. That is, the control valve 224 can be a proportioning valve rather than a digital "on" or "off" type control valve. Each control valve 224 can have a motor (not shown) that can turn the corresponding valve such that it is open as wide as necessary to circulate the needed water through the corresponding on-floor cooling unit 160. A controller can control the motor. There can be, for example, one master controller to control all of the control valves 224. Alternatively, each control valve 224 can have a corresponding controller to independently control each motor. In some implementations, a master controller can control all of the individual controllers. The controllers can control the control valves 224 to respond to the leaving air temperature (LAT) or other local variables of each cooling unit 160. For example, the controllers can control the control valves 224 to respond to a change in the difference between the leaving air temperature and the entering water temperature.. Each control valve 224, and thus each on-floor cooling unit 160, can act independently of another valve 224 or on-floor cooling unit 160. That is, all increases or decreases in flow through system 100 can be local through controllers at each corresponding on-floor cooling unit 160.

[0053] By designing system 100 such that the amount of water to each on-floor cooling unit 160 is individually controlled and such that all of the modular cooling plants 222 are connected to a common header, water from the system can be distributed to the load in system 100 rather than flowing a constant amount of water through the entire system 100. In this way, water that is not needed for one on-floor cooling unit 160 can be made available to another on-floor cooling unit 160. Because the on-floor cooling units 160 act independently, there can be a large number of on-floor cooling units 160 in system 100, for example over 1,000 cooling units. Further, the system 100 can be designed such that cooled air from multiple cooling units 160 can mix between the time it leaves cooling coils 112a, 112b and is drawn into the servers 102a, 102b, such as by using higher ceiling to exhaust the cooled air from the fan 110 and cooling coils 112a,112b into the space above the servers 102a, 102b.

Having such a design ensures that if one on-floor cooling unit 160 fails, *e.g.* as a result of control valve 224 flowing too much or too little water to the respective on-floor cooling unit 160, the other on-floor cooling units 160 can compensate to cool the data center 101. Moreover, system 100 can be designed such that if one modular cooling plant 222 fails, other modular cooling plants 222 along the same header can take the load. Such a design can allow for the cooling of large numbers of servers. For example, system 100 can include over 1,000 cooling units and corresponding server racks.

[0054] Optionally, a few chillers 130 can be available for use by the system 100. A separate chiller header 228 may be provided which connects one chiller to multiple modular cooling plants 222. Operation of system 100 may switch some or all of the chillers 130 on during times of extreme atmospheric ambient (i.e., hot and humid) conditions or times of high heat load in the data center 101. Referring back to FIG. 1, controlled mixing valves 134 are provided for electronically switching to the chiller circuit, or for blending cooling water from the chiller circuit with cooling water from the condenser circuit. Pump 128 is able to supply tower water to chiller 130, and pump 132 is able to supply chilled water, or cooling water, from chiller 130 to the remainder of system 100. Chiller 130 can take any appropriate form, such as a centrifugal, reciprocating, or screw chiller, or an absorption chiller.

[0055] The chiller circuit can be controlled to provide various appropriate temperatures for cooling water. The chilled water may be supplied from chiller 130 at temperatures elevated from conventional chilled water temperatures. For example, the chilled water may be supplied at temperatures of 55°F (13°C) to 70°F (18 to 21°C) or higher. For example, the water supply temperature can be between 60-64°F, 65-70°F, 71-75°F, or 76-80°F. The water may then be returned at higher temperatures, such as 59 to 176°F (15 to 80°C). In this approach that uses sources in addition to, or as an alternative to, free cooling, increases in the supply temperature of the chilled water can also result in substantial efficiency improvements for the system 100.

[0056] Referring to FIG. 2A, because the chillers 130 are on a separate circuit 228 from the modules 230, the chillers 130 can be shared among modules 230. Such an arrangement can be beneficial when a modular cooling plant 222 or chiller 130 fails. Because the chillers 130 are shared among modules 160, any chiller 130 can supply chilled water to keep the module 160 functioning when either one chillers fails or when a corresponding modular cooling plant 222 fails. Thus, the system 100 can

become more robust as more modules 160 and more chillers 130 are added, as described further herein. Furthermore, the number of chillers 130 can be less than the number of modules 230 to reduce costs. Valves between the chillers and the modular cooling plants 222 can control which chiller supplies chilled water to which modular cooling plant 222. Although not shown, and although on separate headers from the modules 230, the chillers 130 can be housed in some or all of the modules 222.

[0057] Referring back to FIG. 1, pumps 120, 124, 128, 132, may be provided with variable speed drives. Such drives may be electronically controlled by a central control system to change the amount of water pumped by each pump in response to changing environmental conditions or changing conditions such as equipment failure or a new set point in system 100. For example, pump 124 may be controlled to maintain a particular temperature in workspace 106, such as in response to signals from a thermostat or other sensor in workspace 106.

[0058] As shown in FIG. 2B, system 100 can be highly modular, and can therefore be scaled from a very small system to a very large system by adding additional components and subsystems. Because system 100 is modular, the data center can be expanded as capacity is needed while maintaining operation of the plant during construction. A first set of racks of electronic equipment, for example, racks of servers, and associated modular cooling plants and optional chillers can be installed and operation of the equipment can be initiated. As more electronic equipment is needed and received, a second set of the electronic equipment and associated modular cooling plants are installed and placed online. The modular cooling plants associated with the first set of equipment can be fluidly coupled to the modular cooling plants associated with the second set of equipment to provide the backup cooling in the event of failover. Furthermore, although existing plant 301 and future plant 302 are shown as separate systems, connections, such as connection 303, can be made between the two plants in order to share components. While sharing components between old and new systems may cause construction-based interruptions in the existing system, it may also provide for better utilization of the components in the full system. For example, chillers 130 can be extended to be shared among both plants 301 and 302.

[0059] In operation, system 100 may respond to signals from one or more sensors 192 placed in system 100. The sensors may include, for example, thermostats, humidistats, flowmeters, and other similar sensors. In one

implementation, one or more thermostats may be provided to monitor the temperature inside the data center. In some embodiments, air adjacent to an on-floor cooling unit 160 is partially isolated from air adjacent to a neighboring on-floor cooling unit 160. A single on-floor cooling unit 160 cools heated air generated by the servers in the associated workspace. The sensors 192 can measure the leaving air temperature, defined as the temperature leaving the cool air coils 112a, 112b or the cool air plenum 108. To measure the leaving air temperature, the one or more sensors 192 can be placed, for example, next to he cool air coils 112a, 112b or the cool air plenum 108 of each on-floor cooling unit 160.

[0060]As shown in FIG. 1, a single temperature sensor 192 can be used for each on-floor cooling unit 160. Alternatively, an array of sensors, such as between two and ten sensors, for example four sensors, may be used for each on-floor cooling unit and the average temperature, such as the average leaving air temperature, determined. While other implementations may include placing multiple thermostats throughout system 110, such as in the warm air plenums 104a, 104b or near the servers 102a, such temperatures tend to vary. Measuring the leaving air temperature may therefore be a more robust method of controlling system 100.

[0061] The leaving air temperature measured by the thermostats can be used to control the valves 224 associated with the on-floor cooling units 160. Further, although in some implementations, the pumps 120, 124, 128, 132 are fixed speed pumps, in other implementations, the temperature reading from the thermostats may be used to control the speed of associated pumps. When the leaving air temperature begins to rise above an inside setpoint, the control valves 224 can be open wider or the pumps 120, 124, 128, 132 can run faster to provide additional cooling water. Such additional cooling water can reduce the leaving air temperature. The leaving air temperature can also be used to indirectly effect the server fans. That is, for computers that regulate their fan speed based on how hard the server is working, controlling the cooling unit leave air temperature to eliminate hot spots in the work area 106 can allow those servers to run their fans slower, thereby using less energy that would otherwise be required.

[0062] When additional water is circulated through system 100 as a result of the valves 224 opening or the pumps 120, 124, 128, 132 pulling more water, the pressure differential between the supply 246 and return 248 ladders falls, requiring the pumps 120, 124, 128, 132 to settle on a lower pressure equilibrium than usual (called

"riding the pump curve"), whereby the pressure drop across the cooling units matches the pressure differential of the pumps. As excess water is drawn from modular cooling plant 222, the modular cooling plant 222 may not be able to maintain a predetermined water supply temperature. For example, because the water is cycling through the system more quickly and the environmental temperature is higher, the cooling towers may not have sufficient time to kick off heat from the water to the environment than when the external temperature is lower. As a result, water that is warmer than the predetermined water supply temperature is circulated through system 100.

[0063] The potentially negative result of circulating water that is warmer than the predetermined water supply temperature through an on-floor cooling unit 160, that is, of less cooling ability of the water flowing through the cooling unit 160, however, can be more than offset by the positive result of flowing extra water through the on-floor cooling unit 160. Thus, the resulting leaving air temperature can be brought down below the inside setpoint. In some embodiments, while the cooling water supplied to on-floor cooling units 160 may be 1 degree warmer than the predetermined water supply temperature, the resulting leaving air temperature may be more than 1 degree cooler than the inside setpoint.

[0064] Controllers may also be used to control the speed of various items such as fan 110 to maintain a set pressure differential between two spaces, such as attic 105 and workspace 106, and to thereby maintain a desired airflow rate. Where mechanisms for increasing cooling, such as speeding the operation of pumps, are no longer capable of keeping up with increasing loads, a control system may activate chiller 130 and associated pumps 128, 132, and may modulate control valves 134 accordingly to provide additional cooling.

[0065] System 100 may also respond to signals from outside data center 101, e.g. to the temperature outside the data center 101 (which can correlated to and monitored by the temperature of water supplied from the cooling tower). Thermostats may be used to monitor the temperature outside the data center 101. When the temperature, e.g. either the air temperature or the wetbulb temperature, outside of the data center 101 is below a predetermined value, water that is cooled in the cooling tower is at least as cool as a predetermined water supply temperature. This cooled water can be circulated through system 100 in order to keep the temperature inside the data center 101, for example the leaving air temperature of each on-floor cooling unit

160, below an inside setpoint. The inside setpoint can be, for example, less than 120°F, such as less than 115°F or less than 110°F, such as 75°F to 85°F and can vary throughout the year, as discussed below. Federal OSHA and California OSHA guidelines may also provide limitations on the inside setpoint. Furthermore, the setpoint might vary by geographical location to take into account the average temperature and humidity in the respective location. When the temperature outside the data center 101 rises above the predetermined value, water that is warmer than the predetermined water supply temperature can be circulated through system 100, thus causing the temperature inside the data center 101 to rise above the inside setpoint. The data center 101 can be rated to run on water having a temperature that is less than the predetermined water supply temperature, i.e. data center 101 may have sufficient water resources to keep the leaving air temperature below a predetermined temperature and in some cases, to keep the water temperature in system 100 less than the predetermined water supply temperature.

[0066] In one implementation, supply temperatures for cooling water can be between 65°F and 70°F, such as 68°F (20°C), while return temperatures can be between 100°F and 110°F, such as 104°F (40°C). In other implementations, the supply water can be supplied at temperatures of 50°F to 84.20°F or 104°F (10°C to 29°C or 40°C) and the return water can be supplied at temperatures of 59°F to 176°F (15°C to 80°C) for return water. The temperature of the water supplied by the cooling tower may be generally slightly above the wet bulb temperature under ambient atmospheric conditions, while the temperature of the water returned to the cooling tower will depend in part on the heat inside building 101.

[0067] Using these parameters and the parameters discussed above for entering and exiting air, relatively narrow approach temperatures may be achieved with the system 100. The approach temperature, in this example, is the difference in temperature between the air flowing away from a coil and the water entering a coil. The approach temperature is always positive because the water entering the coil is the coldest water, and the water warms as it travels through the coil. As a result, the water can be appreciably warmer by the time it exits the coil. Air passing over the coil near the water's exit point is warmer than air passing over the coil at the water's entrance point. Because even the most-cooled exiting air at the cooling water's entrance point is warmer than the entering water, the overall exiting air temperature is at least somewhat warmer than the entering cooling water temperature.

[0068] Keeping the approach temperature small permits a system to be run on free, or evaporative, cooling for a larger portion of the year and reduces the size of a chiller used with the system, if any chiller is needed at all. To lower the approach temperature, the cooling coils may be designed for counterflow. In counter-flow, the warmest air flows near the warmest water and the coolest air exits near where the coolest water enters.

[0069] In certain implementations, the entering water temperature may be 64°F (18°C) and the exiting air temperature 77°F (25°C), as noted above, for an approach temperature of 13°F (7°C). In other implementations, wider or narrower approach temperature may be selected based on economic considerations for an overall facility.

[0070] With a close approach temperature, the temperature of the cooled air leaving the coil closely tracks the temperature of the cooling water entering the coil. As a result, the air temperature can be maintained, generally regardless of load, by maintaining a constant water temperature. In an evaporative cooling mode, a constant water temperature can be maintained as the wet bulb temperature stays constant (or changes very slowly), and by blending warmer return water with supply water or modulating cooling tower fans as the wet bulb temperature falls. As such, active control of the cooling air temperature can be avoided in certain situations, and control can occur simply on the cooling water return and supply temperatures.

[0071] FIG. 3 is a psychrometric chart showing a heating and cooling cycle for air in a data center. A psychrometric chart graphically represents the thermodynamic properties of moist air (which is air containing any appreciable moisture, and not merely air that would feel moist to a person). The chart is from ASHRAE Psychrometric Chart No.1, which defines properties of air for sea level applications. *See* 1997 ASHRAE Handbook – Fundamentals, at page 6.15. Other charts may also be used, and the chart shown here is merely used to exemplify certain aspects of the concepts discussed in the present document.

[0072] The psychrometric chart is criss-crossed with a number of lines that represent various properties of air. Cooling and heating processes on air can be analyzed by identifying a point on the chart that represents air at a particular condition (e.g., temperature and humidity), and then locating another point that represents the air at another condition. A line between those points, generally drawn as a straight

line, may be fairly assumed to represent the conditions of the air as it moves from the first condition to the second, such as by a cooling process.

[0073] Several properties will be discussed here. First, saturation temperature is an arc along the left of the graph and represents the temperature at which air becomes saturated and moisture begins coming out of the air as a liquid—also known popularly as the "dew point." When the temperature of air is taken below the dew point, more and more water comes out of the air because the cooler air is capable of holding less water.

[0074] The dry bulb temperature of air is listed along the bottom of the graph and represents what is popularly viewed as temperature, i.e., the temperature returned by a typical mercury thermometer.

[0075] The chart shows two numbers relating to the humidity of air. The first is the humidity ratio, listed along the right edge of the graph, and is simply the weight of moisture per each unit weight of dry air. Thus, the humidity ratio will stay constant at various temperatures of air, until moisture is removed from the air, such as by pushing the air temperature down to its dew point (e.g., the moisture comes out of the air and ends up on the grass in the morning) or by putting moisture into the air (e.g., by atomizing water into such as fine mist in a humidifier that the mist can be supported by the natural motion of the air molecules). Thus, when graphing processes that involve simple changes in air temperature, the point that represents the state of the air will move straight left and right along the graph at a constant humidity ratio. That is because the dry-bulb temperature will go up and down, but the humidity ratio will stay constant.

[0076] The second humidity parameter is the so-called relative humidity. Unlike the humidity ratio, which measures the absolute amount of moisture in the air, the relative humidity measures the amount of moisture in the air as a percent of the total moisture the air could possibly hold at its current temperature. Warmer air can hold more moisture than can colder air, because the molecules in warmer air are moving more rapidly. Thus, for an equal amount of moisture in the air (i.e., an equal humidity ratio), the relative humidity will be lower at a high temperature than at a low temperature.

[0077] As one example, on a summer day when the overnight low was 55 degrees Fahrenheit and there is dew on the ground, and the daytime high is around 75 degrees Fahrenheit, the relative humidity in the early morning will be about 100%

(the dew point), but the relative humidity in the afternoon will be a very comfortable 50%, even if one assumes that the identical amount of water is in the air at both times. This exemplary process is shown in FIG. 3 by the points marked C and D, with point C showing saturated air at 55 degrees Fahrenheit (the overnight low), and point D representing that same air warmed to 75 degrees Fahrenheit (the daytime temperature)

.

[0078] Commercial air handling systems take advantage of this same process in providing conditioned air in a building. Specifically, systems may gather air from an office space at 75 degrees Fahrenheit and a relative humidity of 60 percent. The systems pass the air through a cooling coil that looks like an automobile radiator to cool the air to 55 degrees Fahrenheit, which will typically push the air down to its dew point. This will make moisture pour out of the air as it passes through the cooling coil. The moisture can be captured in drains below the cooling coil and then be removed from the building. The air can then be returned to the work space, and when it warms back to 75 degrees, it will be a very comfortable 50 percent relative humidity.

[0079] This common cooling process is shown by points A, B, C, and D on the chart of FIG. 3. Point A shows the 75 degree air at 70 percent relative humidity. Point B shows the air cooled to its dew point, which it hits at a temperature (dry bulb) of about 65 degree Fahrenheit. Further cooling of the air to 55 degrees Fahrenheit (to point C) rides along the saturation curve, and water will come out of the air during that portion of the cooling. Finally, the state of the air moves to point D as the air is warmed and reaches 75 degrees Fahrenheit again. At this point, the relative humidity will be 50 percent (assuming it does not pick up additional moisture from the room or the existing room air) rather than the original 60 percent because the cooling process has dehumidified the air by pulling moisture out of the air in the cooling coil. If the room air contains more moisture than does the cooled air, point D will be slightly above its position shown in FIG. 3, but still below point A.

[0080] Such a common process brings with it a number of challenges. First, to cool the air to 55 degrees Fahrenheit, the system must provide cooling water in the cooling coil that can absorb all the heat. Such water would need to be at least cooler than 55 degrees Fahrenheit. It may be expensive to create such cool water—requiring systems such as chillers and other energy-intensive systems. In addition, the area immediately around the pipes that supply the cooling water will be cooler than 55

degrees Fahrenheit, i.e., cooler than the dew point of the air if the pipes run through the workspace or through air having the same state as the air in the workspace. As a result, moisture from the air may condense on the pipe because the temperature of the surrounding air has fallen to its dew point. Thus, insulation may be required around the cool pipes to prevent such condensation, and condensation might occur in any event, and cause rusting, mold, water pooling, or other problems. Finally, it takes a lot of energy to dehumidify, i.e., to change the water from one state to another.

[0081] The warm air cooling features discussed with respect to FIG. 1 above may, in certain implementations, avoid one or more of these challenges. An exemplary warm air cooling process is shown on the graph of FIG. 3 by points E and F. Point E shows a room-air condition in a workspace that is near the top of, but within, common guidelines for comfort levels for people dressed in summer clothing. See 1997 ASHRAE Handbook – Fundamentals, at page 8.12. That condition is 75°F (24°C), and a relative humidity of about 70 percent (the same as Point A in the prior example). Point F shows heating of that air without the addition of moisture, such as by passing the air over heat-generating computer components in a rack-mounted server system. The temperature rise is 36°F (20°C) to bring the air to a state of 111°F (44°C) at about 23 percent relative humidity. The air may then be cooled to its original temperature (point E) of 75 degrees Fahrenheit in a cooling coil before it is re-introduced to the work space, without adding water to or removing water from the air.

[0082] Points G and H on the graph represent the condition of air in the space immediately surrounding cooling pipes. It is assumed for this example that the cooling supply water is 68 degrees Fahrenheit (20 degrees Celsius) and the return temperature is 104 degrees Fahrenheit (40 degrees Celsius). It is also assumed that the air near the pipes will contain the same moisture level as the rest of the air in the space, and that the air immediately surrounding the pipe takes on the same temperature as the water inside the pipe. As can be seen, this air associate with the cooling water also stays above the saturation point, so that there should be no condensation on the cooling water pipes, and thus no need for insulation to prevent condensation on the pipes.

[0083] It can be seen by this process that the air never becomes saturated. As a result, the system need not provide energy to create a phase change in the air. In addition, the system need not provide liquid recovery structures at the cooling coil, or

pipe insulation for anywhere. Other similar temperatures, and in many implementations warmer temperatures, may be used. The particular temperatures discussed here are meant to be exemplary only.

[0084] FIG. 4 is a graph of an inside setpoint temperature for a computing facility over a one year time period. The inside setpoint temperature may be a temperature in a work space such as work space 106 in FIG. 1. As shown in the stepped graph, the inside setpoint temperature (i.e., a targeted temperature) is adjusted infrequently, such as seasonally or monthly, so as to more closely track expected outdoor wetbulb temperatures. The inside setpoint is increased in the summer because the lower winter inside setpoint may be effectively unattainable in warm summer weather by using only evaporative cooling. Thus, while a "best," i.e. lower temperature such as 71°F (22°C), inside setpoint temperature applies in the winter, that same inside setpoint is not realistic, in the example, in summer months.

[0085] The inside setpoint may be manually set by a user and can be adjusted infrequently so as to better approximate a setpoint that is attainable using evaporative cooling techniques with little or no assistance from chillers or other similar components that require relatively high levels of energy to operate. Although increasing the inside setpoint during warmer times of the year may increase the typical operating temperature, it also decreases the amount of thermal cycling that may occur in a facility, and thus lengthen the life of electronic components in the facility. In contrast, if the setpoint is kept as low as possible, the conditioned space would be relatively cool on days having a low wet bulb temperature and relatively warm on days having a high wet bulb temperature. Thus, keeping a constant setpoint throughout the year may actually increase thermal cycling, particularly in warmer months—as the system is able to maintain the setpoint on some days but not on other days. In another embodiment, the cooling units may be controlled to stabilize the difference between their leaving air temperature and their entering water temperature. By applying resets to the cooling plan setpoints, the air temperature in the work space 106 can be effectively slaved to the temperature of the water from the cooling plant, thereby removing one layer of setpoints to be scheduled.

[0086] The setpoint may also be adjusted substantially continuously, such as by varying the setpoint temperature in an annual sinusoidal manner that generally follows the expected outdoor wet bulb temperature, as shown by the sinusoidal setpoint line. Studies have indicated that human discomfort is minimized by

providing many minute changes, or continuous changes, to temperature, as opposed to large step variations in temperature. In both examples the setpoint may be maintained, in certain implementations, even if a lower temperature may readily be achieved (e.g., because the outdoor wet bulb temperature is lower than expected) so as to minimize thermal cycling in a facility being cooled.

[0087] The particular setpoint temperatures may be selected based on the capabilities of the components in a facility and on prevailing local weather conditions. For example, cool weather setpoints may be in the range of 59-77°F (15-25°C), with particular values of 64.4, 68, 71.6, and 75.2°F (18, 20, 22, and 24°C). Warm weather setpoints may be in the range of 68-86°F (20-30°C), with particular values of 71.6, 75.2, 78.8, and 82.4°F (22, 24, 26, ad 28°C). In a particular implementation, warm weather air temperatures in a facility may be approximately 80.6-82.4°F (27-28°C) and cold weather temperature may be about 71.60°F (22°C). The time for resetting the setpoint may also vary, and may be weekly (e.g., using a long range weather forecast to select an achievable setpoint that tracks the predicted wet bulb temperature), weekly, monthly, or quarterly, for example.

[0088] When the wet bulb or air temperature gets too high to achieve the desired inside set point, the temperature of the cooling water may be allowed to drift upward with the outside temperature, causing the temperature in space 106 to move upward also. If the outside temperature rises above a predetermined value, as discussed above, then the temperature inside the data center 101 can be allowed to rise above an inside setpoint, as shown by area 401 in FIG. 4. This rise in the temperature inside the data center can be achieved, as discussed above, by flowing warm water, that is water that is warmer than a predetermined water supply temperature through system 100. Correspondingly, more water can be circulated through system 100 in order to carry the heat away faster and to compensate for the warm water circulated through the system.

[0089] The rise in temperature inside the data center 101 over the inside setpoint can be limited in time, for example to less than 10% of the operating time of the data center or the equipment, such as less than 5%, less than 1%, or less than 0.5% of the operating time. Likewise, the amount of time that warm water is circulated through the system 100 can be limited in time, for example to less than 1000 hours per year, less than 500 hours per year, less than 100 hours per year, or less than 50 hours per year. If the temperature inside the data center 101 is over the inside setpoint

for more than 10% of the operating time of the data center or the equipment or if warm water is circulated for more than 1000 hours per year, the electronic equipment may fail more quickly than desired. For example, the electronic equipment may fail more quickly after running warm water 15% of the annual operating time of the data center or equipment or for 1500 hours.

[0090] FIG. 5 is a flowchart 500 showing steps for cooling a data center using one or more periods of elevated temperatures. The method is exemplary only; other steps may be added, steps may be removed, and the steps may be performed in different orders than those shown, as appropriate. The temperature outside of the data center is monitored (step 502). The leaving air temperature from the data center is monitored (step 503). A determination is made as to whether the temperature outside the data center is above a predetermined value (step 504). When the temperature outside of the data center is not above a predetermined value, the leaving air temperature can be maintained below an inside setpoint by flowing cool water through a cooling system within the data center (step 505). That is, water that is at least as cool as a predetermined water supply temperature is circulated through the data center. When the temperature outside of the data center rises above the predetermined value, the leaving air temperature can be allowed to be greater than the inside setpoint by flowing water through the cooling system that is warmer than the predetermined water supply temperature (step 506).

[0091] FIG. 6 is a flowchart 600 showing steps for cooling a data center using one or more periods of elevated temperatures for less than 90% of the operating time of the data center electronic equipment. The method is exemplary only; other steps may be added, steps may be removed, and the steps may be performed in different orders than those shown, as appropriate. The temperature outside of the data center is monitored (step 602). When the temperature outside of the data center is not above a predetermined value, the leaving air temperature can be maintained below an inside setpoint by flowing cool water through a cooling system within the data center (step 605). That is, water that is at least as cool as a predetermined water supply temperature is circulated through the data center. When the temperature outside of the data center rises above the predetermined value, the leaving air temperature can be allowed to be greater than the inside setpoint by flowing water through the cooling system that is warmer than the predetermined water supply temperature (step 606).

The temperature can maintained below the inside setpoint for more than 90% of the operating time of the electronic equipment.

[0092] Chilled water such as from a chiller may be provided through the modular cooling plant. The chilled water may be blended with cool water so that the inside setpoint may be either maintained or allowed to rise for only a predetermined time. FIG. 7 is a flowchart 700 for cooling a data center having both chilled water and cooled water and using one or more periods of elevated temperatures. The method is exemplary only; other steps may be added, steps may be removed, and the steps may be performed in different orders than those shown, as appropriate. The leaving air temperature is monitored from an on-floor cooling unit in the data center (step 701). The external temperature is monitored (step 703). It is determined whether the external temperature is above a predetermined temperature (step 705). If the external temperature is not above the predetermined temperature, then cooled water is flowed through the data center (step 715). Alternatively, if the external temperature is above a predetermined temperature, then it is determined whether warm water has been circulated through the data center for longer than a predetermined time (step 707). If warm water has not been circulated through the data center for longer than a predetermined time, then warm water is continued to be circulated through the data center (step 709). Alternatively, if warm water has been circulated through the data center for longer than a predetermined time, it is determined whether chilled water should be circulated through the data center (step 711). Chilled water is circulated through the data center (step 713).

[0093] Furthermore, although not shown, additional fans and local fan speed control can be used to maintain the temperature inside the data center. Additional fans can be used to augment the fans in the trays and cooling units. In one embodiment, the fans can collect air from a plurality of racks. In another embodiment, fans can disperse cooled air to a plurality of racks. In another embodiment, a boost fan can be used to make up for pressure drops in the plenums. For example, referring to FIG. 1, if a suction inlet to the fan 110 is much closer to the warm-air plenum 104a than the warm-air plenum 104b, an additional fan can be provided in the path from the warm-air plenum 104b so that the resulting static pressure in the warm-air plenum 104a and the warm-air plenum 104b is approximately equal. If the boost fan is not used, because of pressure drops traversing the plenum in the attic 105, the static pressures in the warm-air plenum 104a and the warm-air plenum 104b could be sufficiently

different to either require larger tray fans in the rack 102b or could overdraw air through the rack 102a. y designing a cooling system as described herein, the efficiency of the system can be improved. For example, allowing the temperature inside the data center to rise above the inside setpoint for short periods of time can minimize the need for chillers. Furthermore, using control valves to individually control the flow of water to each on-floor cooling unit such that only the amount of water as is necessary is used, the total amount of water required for the system is reduced by 10-50%. If the plant is designed to provide enough water for all control valves to be wide open all of the time, to provide water at a temperature below the predetermined water supply temperature, and to provide for water lost due to cleaning and/or evaporation, then the plant would need to have more cool water available than necessary except for the warmest times of the year, for example for 30-40 hours per year. However, by allowing the water temperature to rise during short periods and/or at higher flow requirements, the plant can be designed to require less water. Likewise, cooling with relatively warm water may provide certain benefits when chillers are used. In particular, when a chiller is allowed to provide a smaller temperature change to a coolant, e.g., water, the chiller may provide cooling for less electrical consumption per ton of coolant than if it were required to impart a greater temperature change to the coolant. By having elevated air temperatures in a cooled space, that is, the inside the data center and adjacent to the electrical equipment, the supply water temperature may likewise be higher, and the need for a chiller to cool the water may be less. As a result of these improvements in efficiency and other design parameters discussed herein, the power usage effectiveness (PUE) of the system, that is, the amount of power entering the data center divided by the power used to run the electronic equipment or servers in the data center, can be less than 1.5, for example less than 1.3, or about 1.2.

[0094] A number of embodiments have been described. Nevertheless, it will be understood that various modifications may be made without departing from the spirit and scope of what is described. For example, the steps of the exemplary flow chart on FIG. 6 may be performed in other orders, some steps may be removed, and other steps may be added. Accordingly, other embodiments are within the scope of the following claims.

WHAT IS CLAIMED IS:

1. A system for providing cooled air to a data center, comprising:

a data center having electronic equipment, wherein the electronic equipment is in operation;

a cooling water source;

a plurality of on-floor cooling units in the data center, each on-floor cooling unit configured to cool air warmed by a sub-set of the electronic equipment in the data center;

a plurality of proportioning control valves, each proportioning control valve associated with a single on-floor cooling unit; and

a controller, wherein each proportioning control valve is configured to turn in response to a signal from the controller, the valve able to be closed, fully open or partially open, wherein when the valve is closed, water is blocked from the on-floor cooling unit, when the valve is fully open, a maximum volume of water is circulated through the on-floor cooling unit, and when the valve is partially open, some percent less than 100% of the maximum amount of water is circulated through the on-floor cooling unit, and wherein the controller is configured to turn the corresponding control valve in response to a change in temperature.

2. The system of claim 1, wherein the controller is configured to turn the corresponding control valve in response to a change in a leaving air temperature of the corresponding on-floor cooling unit.

3. The system of claim 2, wherein the controller is configured to turn the corresponding control valve such that the leaving temperature of the corresponding on-floor cooling unit remains below an inside setpoint for at least 90% of the operating time of the system.

4. The system of claim 2, further comprising a plurality of sensors, each sensor configured to measure the leaving air temperature of an on-floor cooling unit.

5. The system of claim 1, wherein the proportioning control valve acts independently of any other control valve.

6. The system of claim 1, wherein the cooling water source comprises a cooling tower.

7. The system of claim 1, wherein each on-floor cooling unit comprises a heat exchanger configured to transfer heat from the electronic equipment to the cooling water source.

8. The system of claim 7, wherein the heat exchanger comprises coils located adjacent to one or more common hot air plenums that receive heated air from the electronic equipment.

9. A system for providing cooled air to electronic equipment, comprising:

a data center having electronic equipment, wherein the electronic equipment is in operation;

a plurality of modules connected by a first header, wherein each module comprises a plurality of on-floor cooling units in the data center and a cooling water source; and

at least one chiller connected by a second header such that the at least one chiller is in fluid connection with more than one module in the plurality of modules.

10. The system of claim 9, wherein the number of chillers is less than the number of modules.

11. The system of claim 9, wherein each on-floor cooling unit comprises a corresponding proportioning control valve configured to control the flow of water through the on-floor cooling unit.

12. The system of claim 9, wherein the cooling water source comprises a cooling tower.

13. The system of claim 9, wherein each on-floor cooling unit comprises a heat exchanger configured to transfer heat from the electronic equipment to the cooling water source.

14. The system of claim 13, wherein the heat exchanger comprises coils located adjacent to one or more common hot air plenums that receive heated air from the electronic equipment.

15. A system for cooling air in a data center, comprising:

a data center having electronic equipment, wherein the electronic equipment is in operation;

a cooling water source configured to retain at maximum capacity a total amount of water; and

a plurality of on-floor cooling units in the data center, each on-floor cooling unit configured to cool air heated by a portion of the electronic equipment in the data center using water from the cooling water source;

wherein the total amount of water is insufficient to maintain a leaving air temperature of each on-floor cooling unit below an inside setpoint when a temperature outside of the data center is above a predetermined external temperature.

16. The system of claim 15, wherein the cooling water source consists of a cooling tower.

17. The system of claim 15, wherein each on-floor cooling unit comprises a heat exchanger configured to transfer heat from the electronic equipment to the cooling water source.

18. The system of claim 17, wherein the heat exchanger comprises coils located adjacent to one or more common hot air plenums that receive heated air from the electronic equipment.

19. The system of claim 15, wherein:

the system is located in a geographical region; and

for at least 90% of a year, temperatures outside of the data center are below the predetermined external temperature.

20. The system of claim 19, wherein for at least 95% of the year, temperatures outside of the data center are below the predetermined external temperature.

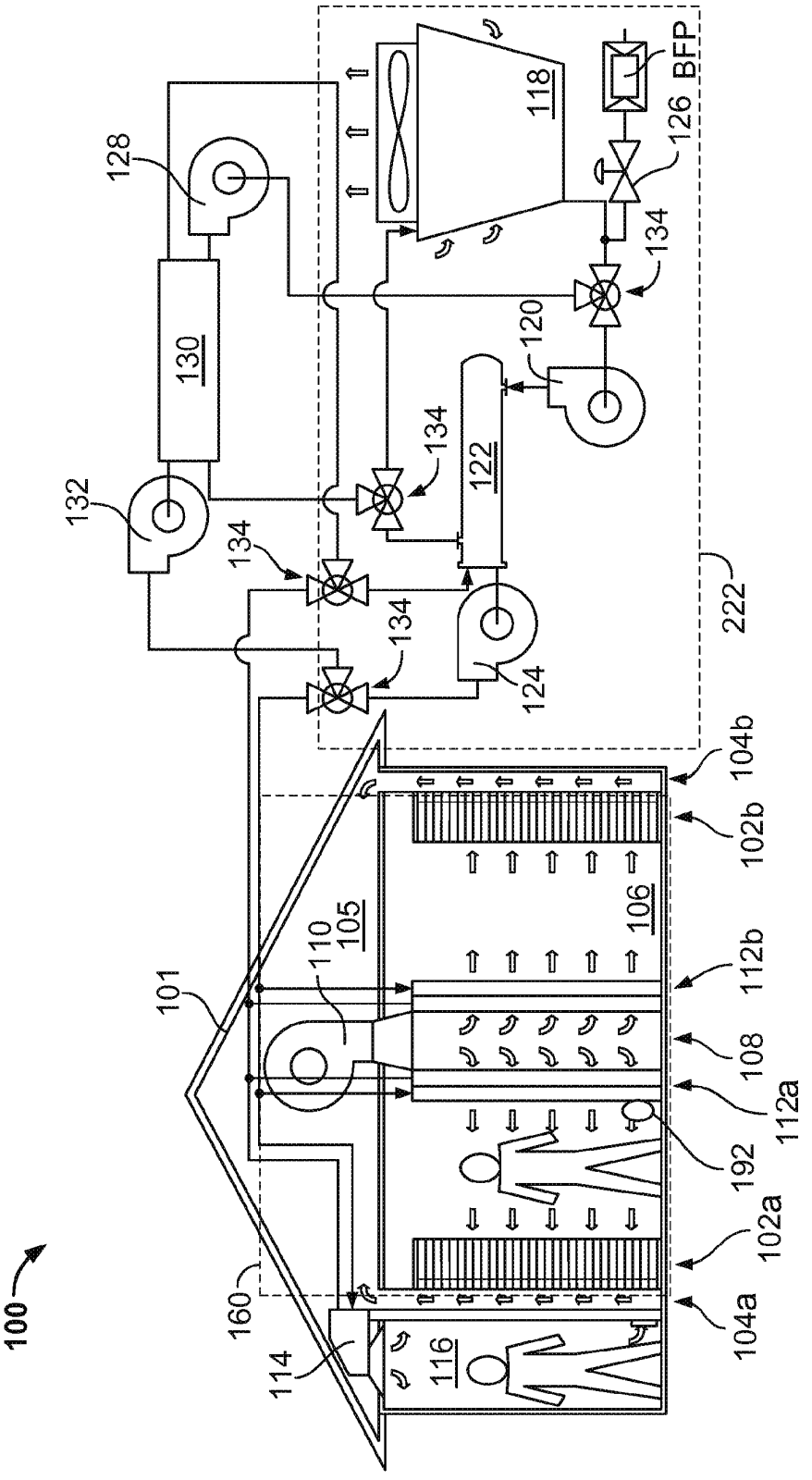
100
101
102a
102b
104a
104b
105
106
108
110
112a
112b
114
116
118
120
122
124
126
128
130
132
134
160
192
222
BFP

FIG. 1

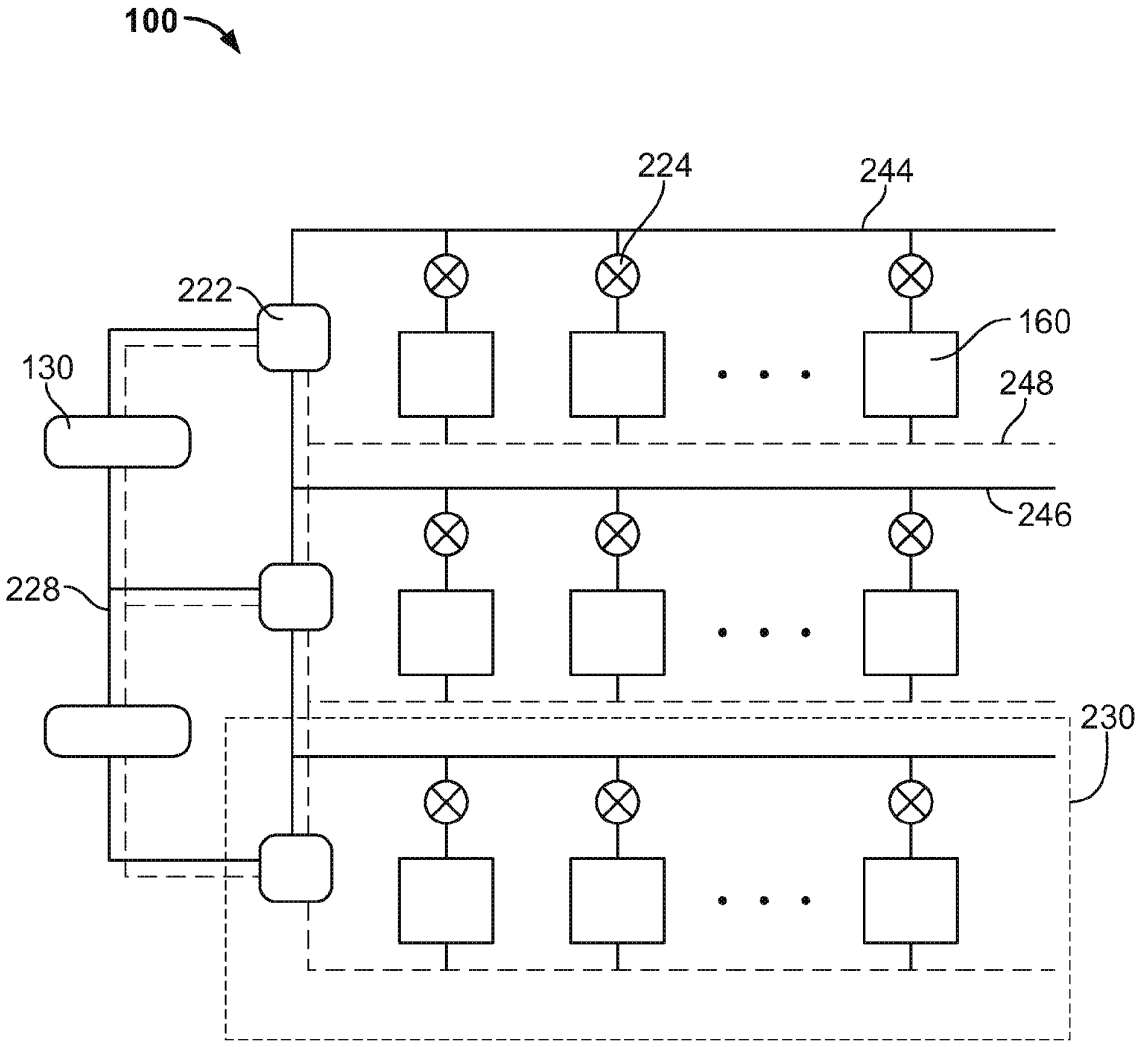

FIG. 2A

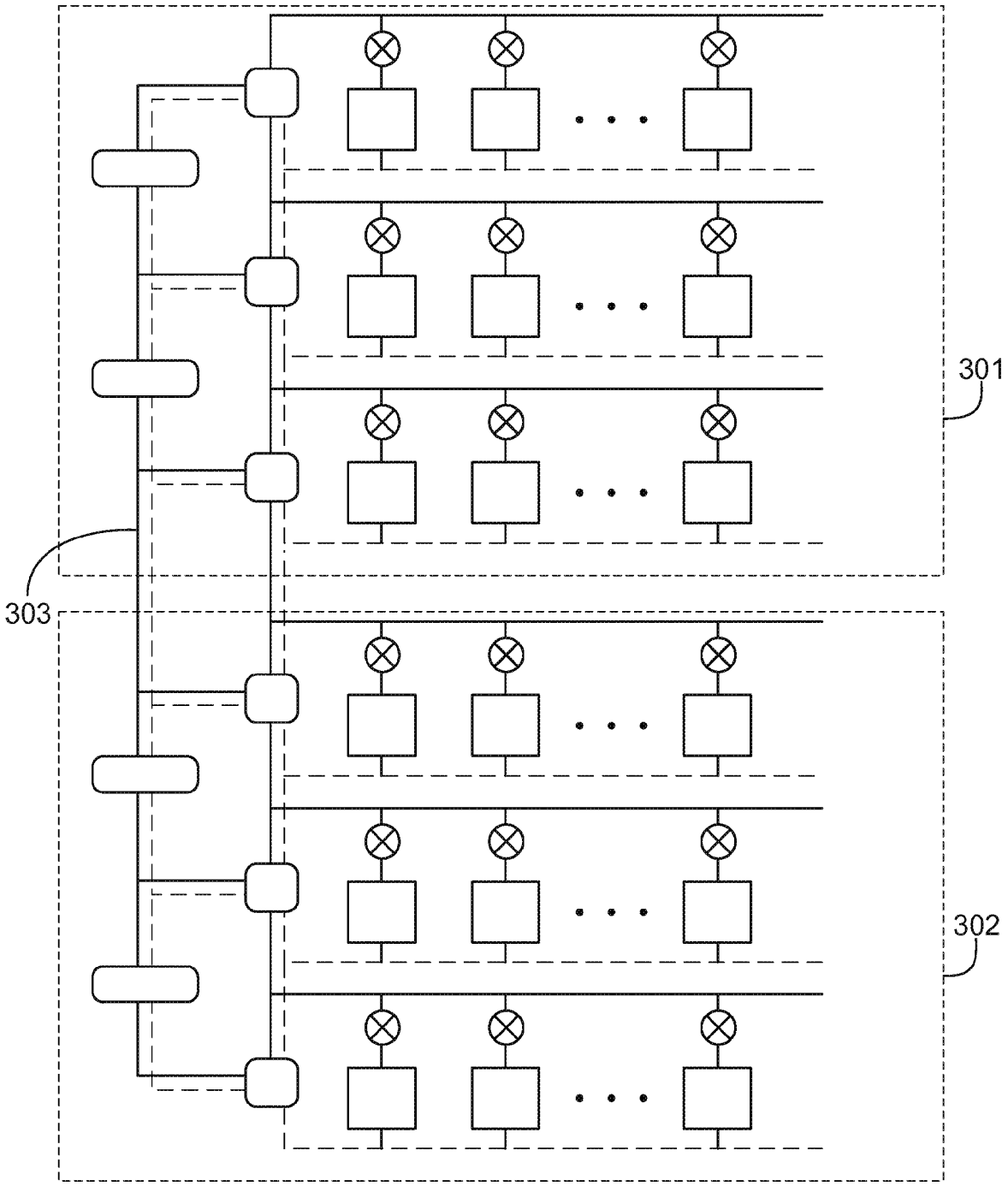

FIG. 2B

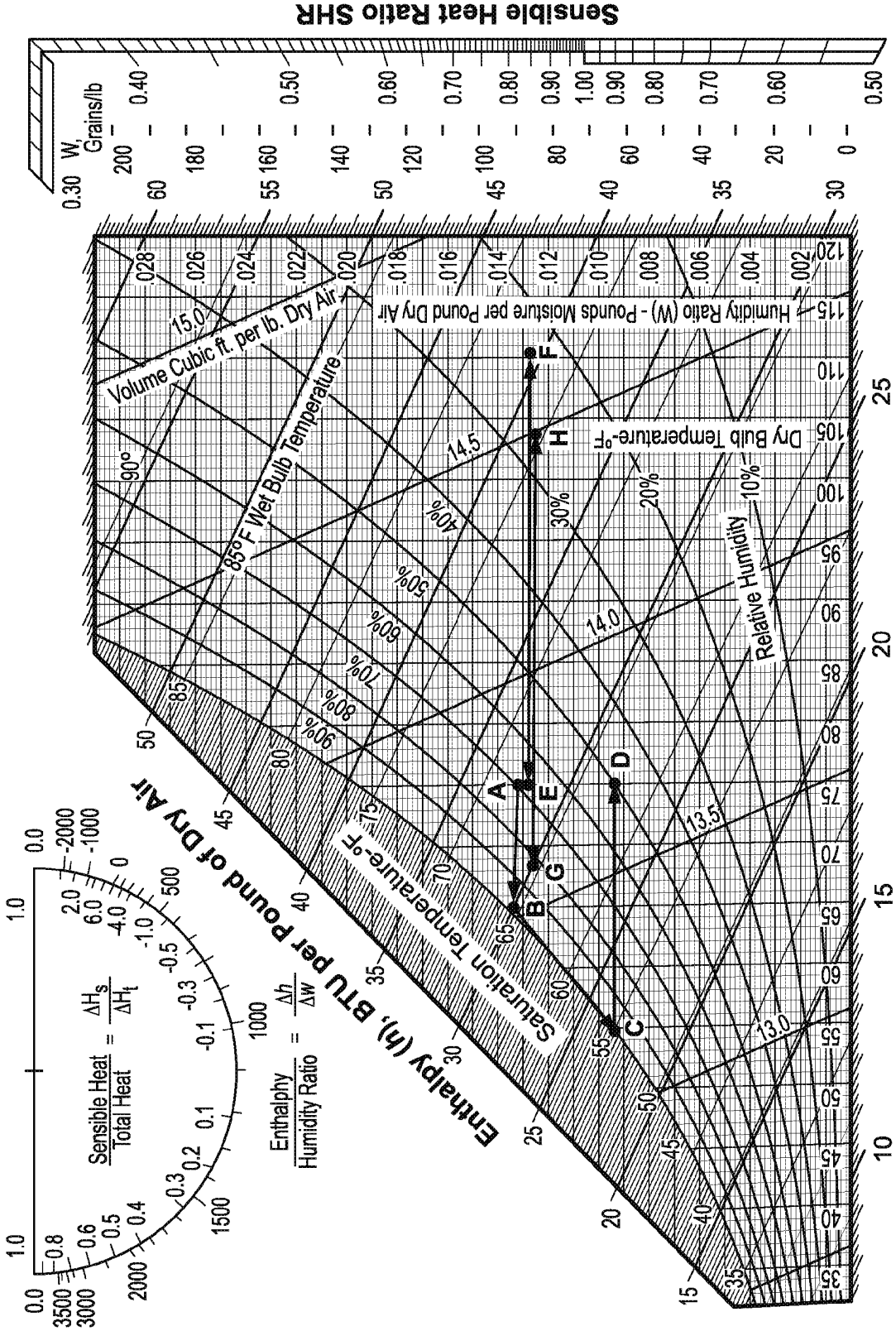
Sensible Heat Ratio SHR
W, Grains/lb
Humidity Ratio (W) - Pounds Moisture per Pound Dry Air
Dry Bulb Temperature-°F
Volume Cubic ft. per lb. Dry Air
85°F Wet Bulb Temperature
Saturation Temperature-°F
Relative Humidity
Enthalpy (h), BTU per Pound of Dry Air
Enthalpy (h), BTU per Pound of Dry Air
Sensible Heat / Total Heat = ΔHs / ΔHt
Enthalpy / Humidity Ratio = Δh / Δw
A
B
C
D
E
F
G
H

FIG. 3

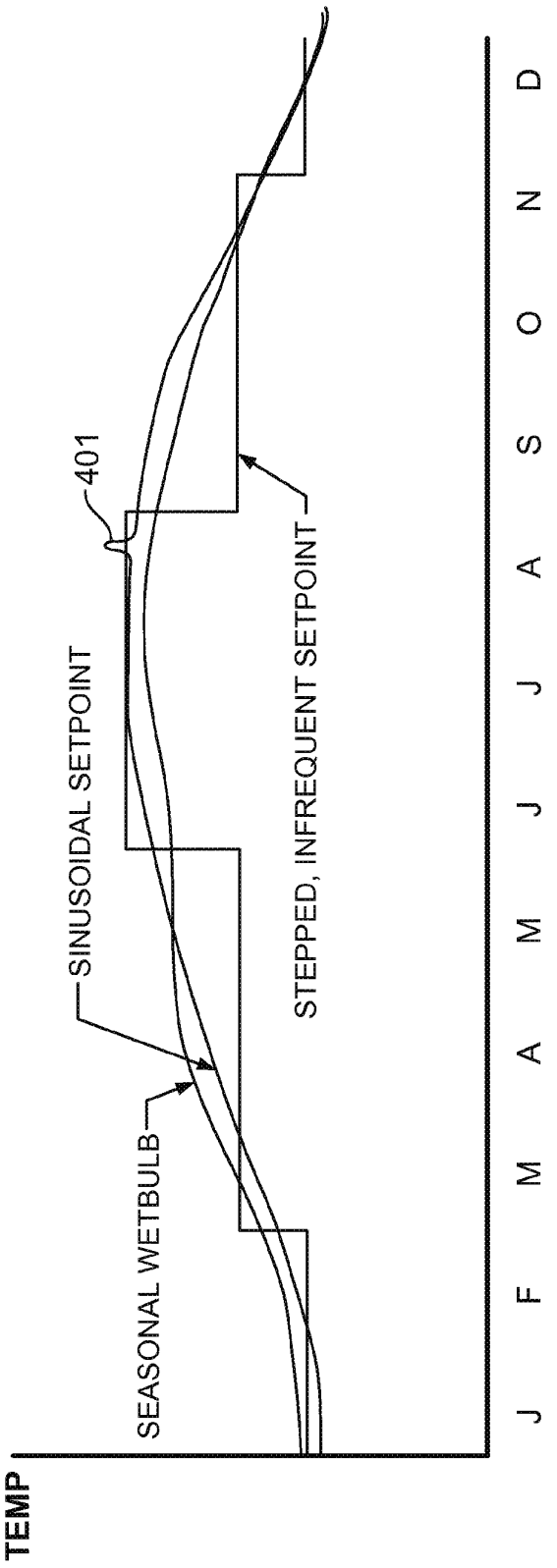
TEMP
J F M A M J J A S O N D
SEASONAL WETBULB
SINUSOIDAL SETPOINT
401
STEPPED, INFREQUENT SETPOINT

FIG. 4

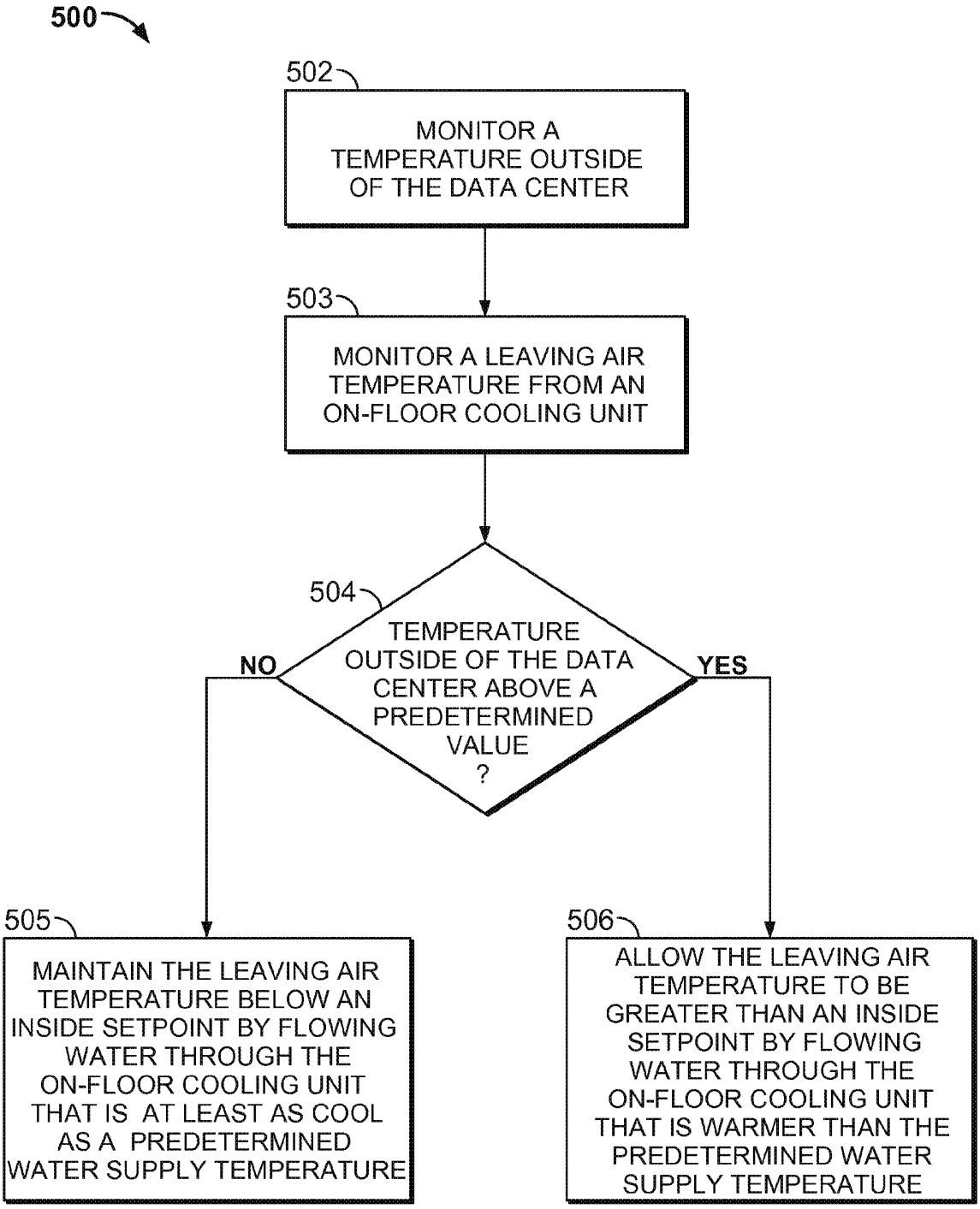
500
502
MONITOR A TEMPERATURE OUTSIDE OF THE DATA CENTER
503
MONITOR A LEAVING AIR TEMPERATURE FROM AN ON-FLOOR COOLING UNIT
504
TEMPERATURE OUTSIDE OF THE DATA CENTER ABOVE A PREDETERMINED VALUE ?
NO
YES
505
MAINTAIN THE LEAVING AIR TEMPERATURE BELOW AN INSIDE SETPOINT BY FLOWING WATER THROUGH THE ON-FLOOR COOLING UNIT THAT IS AT LEAST AS COOL AS A PREDETERMINED WATER SUPPLY TEMPERATURE
506
ALLOW THE LEAVING AIR TEMPERATURE TO BE GREATER THAN AN INSIDE SETPOINT BY FLOWING WATER THROUGH THE ON-FLOOR COOLING UNIT THAT IS WARMER THAN THE PREDETERMINED WATER SUPPLY TEMPERATURE

FIG. 5

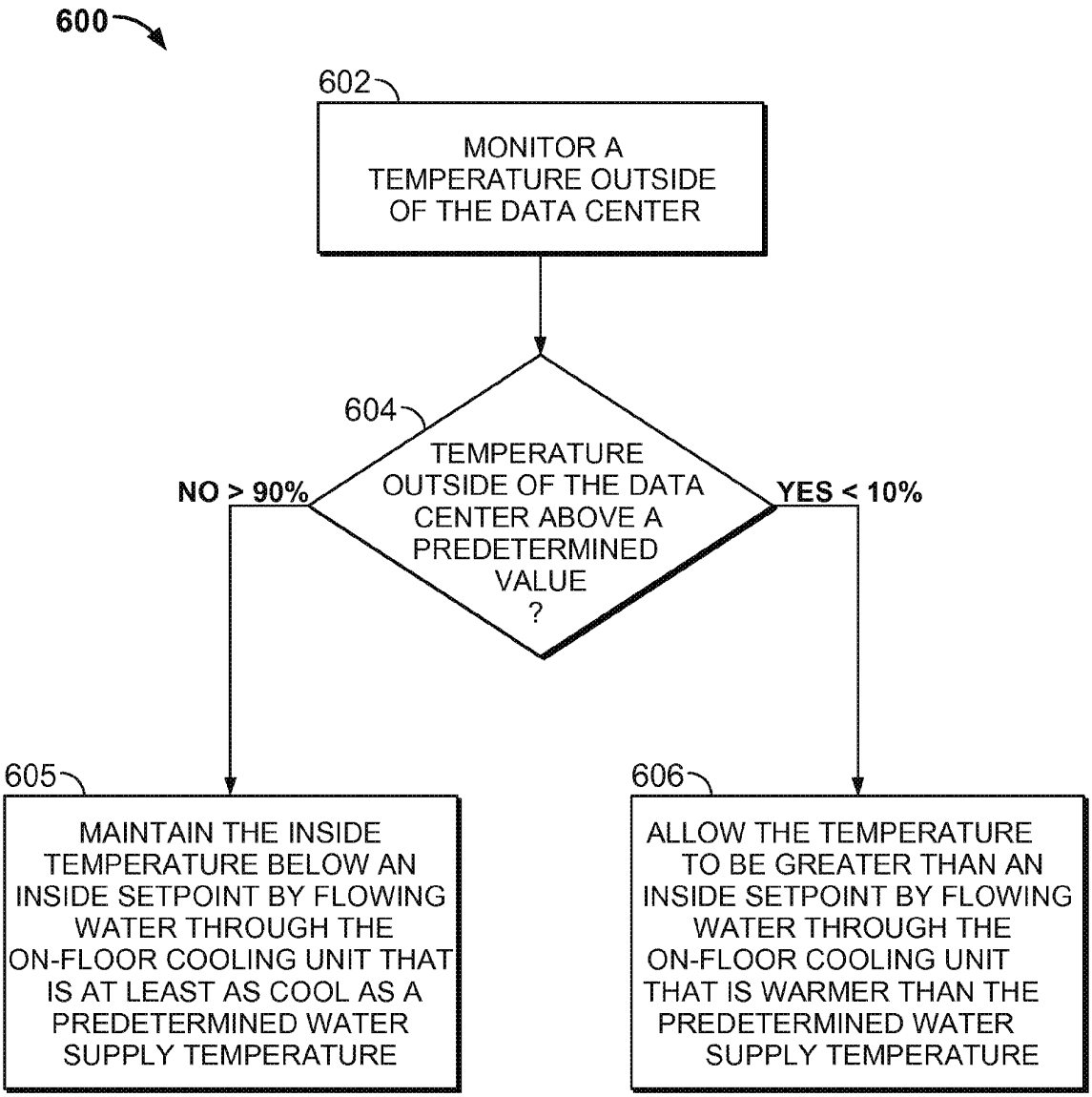
600
602
MONITOR A TEMPERATURE OUTSIDE OF THE DATA CENTER
604
TEMPERATURE OUTSIDE OF THE DATA CENTER ABOVE A PREDETERMINED VALUE ?
NO > 90%
YES < 10%
605
MAINTAIN THE INSIDE TEMPERATURE BELOW AN INSIDE SETPOINT BY FLOWING WATER THROUGH THE ON-FLOOR COOLING UNIT THAT IS AT LEAST AS COOL AS A PREDETERMINED WATER SUPPLY TEMPERATURE
606
ALLOW THE TEMPERATURE TO BE GREATER THAN AN INSIDE SETPOINT BY FLOWING WATER THROUGH THE ON-FLOOR COOLING UNIT THAT IS WARMER THAN THE PREDETERMINED WATER SUPPLY TEMPERATURE

FIG. 6

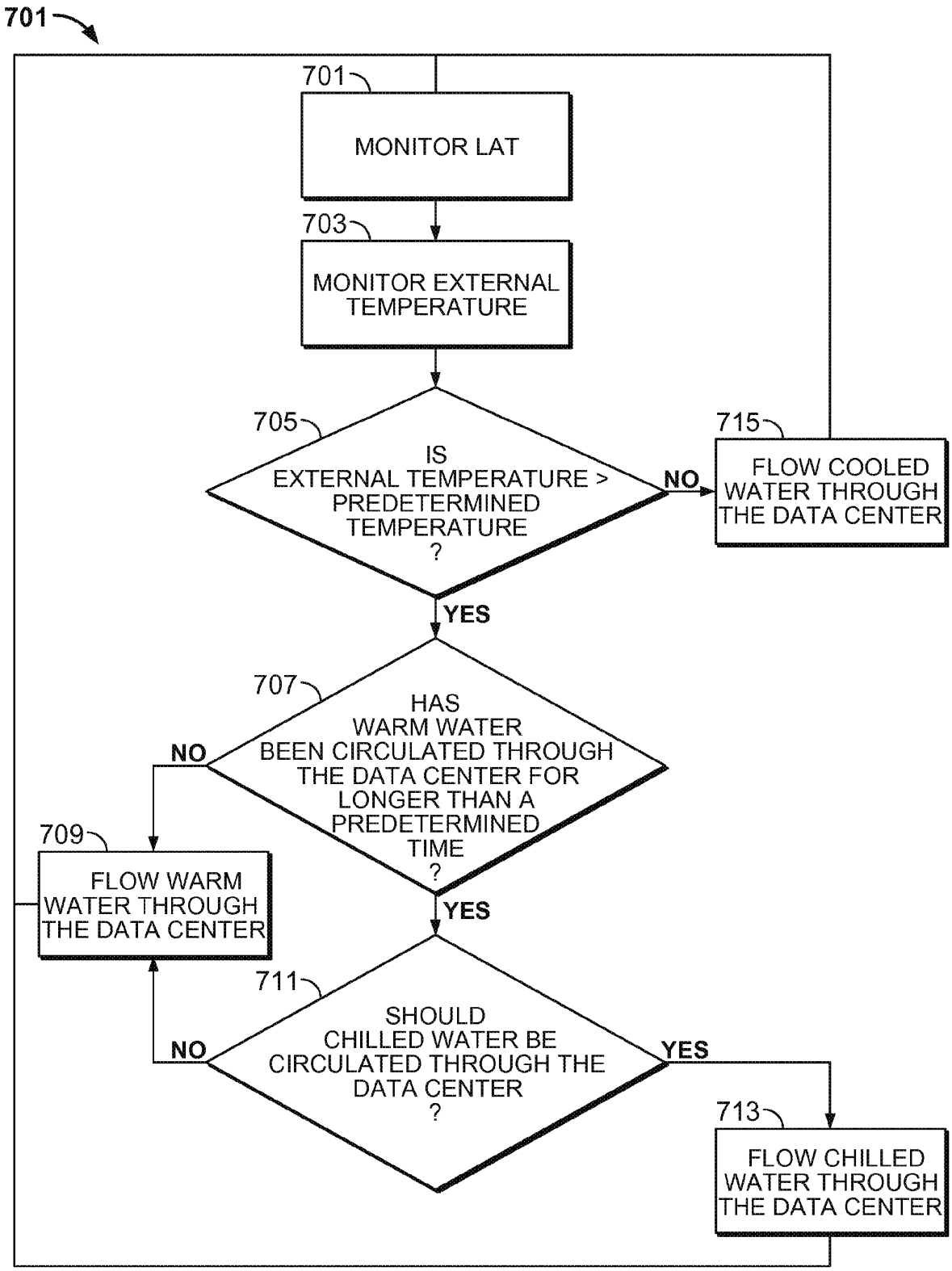
701
701
MONITOR LAT
703
MONITOR EXTERNAL TEMPERATURE
705
IS EXTERNAL TEMPERATURE > PREDETERMINED TEMPERATURE ?
NO
715
FLOW COOLED WATER THROUGH THE DATA CENTER
YES
707
HAS WARM WATER BEEN CIRCULATED THROUGH THE DATA CENTER FOR LONGER THAN A PREDETERMINED TIME ?
NO
709
FLOW WARM WATER THROUGH THE DATA CENTER
YES
711
SHOULD CHILLED WATER BE CIRCULATED THROUGH THE DATA CENTER ?
NO
YES
713
FLOW CHILLED WATER THROUGH THE DATA CENTER

FIG. 7

UNITED STATES PATENT AND TRADEMARK OFFICE

UNITED STATES DEPARTMENT OF COMMERCE
United States Patent and Trademark Office
Address: COMMISSIONER FOR PATENTS
P.O. Box 1450
Alexandria, Virginia 22313-1450
www.uspto.gov

APPLICATION NO.	FILING DATE	FIRST NAMED INVENTOR	ATTORNEY DOCKET NO.	CONFIRMATION NO.
12/611,069	11/02/2009	Andrew B. Carlson	16113-0561001	1728

26222 7590 09/19/2011

FISH & RICHARSON P.C.
P.O. BOX 1022
MINNEAPOLIS, MN 55440-1022

EXAMINER	
TYLER, CHERYL JACKSON	

ART UNIT	PAPER NUMBER
3744	

NOTIFICATION DATE	DELIVERY MODE
09/19/2011	ELECTRONIC

Please find below and/or attached an Office communication concerning this application or proceeding.

The time period for reply, if any, is set in the attached communication.

Notice of the Office communication was sent electronically on above-indicated "Notification Date" to the following e-mail address(es):

PATDOCTC@fr.com

UNITED STATES PATENT AND TRADEMARK OFFICE

Commissioner for Patents
United States Patent and Trademark Office
P.O. Box 1450
Alexandria, VA 22313-1450
www.uspto.gov

FISH & RICHARSON P.C.
P.O. BOX 1022
MINNEAPOLIS MN 55440-1022

In re Application of
CARLSON, ANDREW B.
Application No. 12/611,069
Filed: Novermber 02, 2009
Attorney Docket No. 16113-0561001
For: DATA CENTER COOLING

: DECISION ON REQUEST TO
: PARTICIPATE IN PATENT
: PCT/PROSECUTION HIGHWAY
: PROGRAM AND PETITION
: TO MAKE SPECIAL UNDER
: 37 CFR 1.102(a)

This is a decision on the request to participate in the Patent Prosecution Highway (PPH) program and the petition under 37 CFR 1.102(a), filed August 16, 2011 to make the above-identified application special.

The request and petition are granted.

A grantable request to participate in the PPH pilot program and petition to make special require:

(1) The U.S. application must validly claim priority under 35 U.S.C. 119(a) to one or more applications filed in the JPO;
(2) Applicant must submit a copy of the allowable/patentable claim(s) from the JPO/PCT application(s) along with an English translation thereof and a statement that the English translation is accurate;
(3) All the claims in the U.S. application must sufficiently correspond or be amended to sufficiently correspond to the allowable/patentable claim(s) in the JPO application(s);
(4) Examination of the U.S. application has not begun;
(5) Applicant must submit a copy of all the office actions from each of the JPO/PCT application(s) containing the allowable/patentable claim(s) along with an English translation thereof and a statement that the English translation is accurate; and
(6) Applicant must submit an IDS listing the documents cited by the JPO examiner in the JPO office action along with copies of documents except U.S. patents or U.S. patent application publications.
In light of the petition being properly submitted, the request to participate in the PPH program and the petition comply with the above requirements. Accordingly, the above-identified application has been accorded "special" status.

The applicant is encouraged to cite and submit all relevant prior art references, if any, to facilitate examination in this application. Upon completion of pre-examination processing, this application will be forwarded to an examiner for examination.

Telephone inquiries concerning this decision should be directed to Henry C. Yuen at 571-272-4485. All other inquiries concerning the examination or status of the application should be directed to Cheryl Tyler, SPE of Art Unit 3744, and 571-272-4834 for Class 062 and also accessible in the PAIR system at http://www.uspto.gov/ebc.index.html.

Petition is **granted**.

/Henry C. Yuen/

_____

Henry C. Yuen, Special Programs Examiner
Technology Center 3700 – Mechanical Engineering,
Manufacturing and Products
571-272-4856

UNITED STATES PATENT AND TRADEMARK OFFICE

Commissioner for Patents
United States Patent and Trademark Office
P.O. Box 1450
Alexandria, VA 22313-1450
www.uspto.gov

Decision Date : February 16, 2012

In re Application of :

William Lane

DECISION ON PETITION

UNDER CFR 1.313(c)(2)

Application No : 12611074

Filed : 02-Nov-2009

Attorney Docket No : ADIRE.011A

This is an electronic decision on the petition under 37 CFR 1.313(c)(2), filed February 16, 2012 , to withdraw the above-identified application from issue after payment of the issue fee.

The petition is **GRANTED.**

The above-identified application is withdrawn from issue for consideration of a submission under 37 CFR 1.114 (request for continued examination). See 37 CFR 1.313(c)(2).

Petitioner is advised that the issue fee paid in this application cannot be refunded. If, however, this application is again allowed, petitioner may request that it be applied towards the issue fee required by the new Notice of Allowance.

Telephone inquiries concerning this decision should be directed to the Patent Electronic Business Center (EBC) at 866-217-9197.

This application file is being referred to Technology Center AU 2818 for processing of the request for continuing examination under 37 CFR 1.114 .

Office of Petitions

Doc Code: PET.AUTO Document Description: Petition automatically granted by EFS-Web	PTO/SB/140 U.S. Patent and Trademark Office Department of Commerce

Electronic Petition Request	**PETITION TO WITHDRAW AN APPLICATION FROM ISSUE AFTER PAYMENT OF THE ISSUE FEE UNDER 37 CFR 1.313(c)**
Application Number	12611074
Filing Date	02-Nov-2009
First Named Inventor	William Lane
Art Unit	2818
Examiner Name	TU TU HO
Attorney Docket Number	ADIRE.011A
Title	BIPOLAR TRANSISTOR

An application may be withdrawn from issue for further action upon petition by the applicant. To request that the Office withdraw an application from issue, applicant must file a petition under this section including the fee set forth in § 1.17(h) and a showing of good and sufficient reasons why withdrawal of the application from issue is necessary.

APPLICANT HEREBY PETITIONS TO WITHDRAW THIS APPLICATION FROM ISSUE UNDER 37 CFR 1.313(c).

A grantable petition requires the following items:
(1) Petition fee; and
(2) One of the following reasons:
(a) Unpatentability of one or more claims, which must be accompanied by an unequivocal statement that one or more claims are unpatentable, an amendment to such claim or claims, and an explanation as to how the amendment causes such claim or claims to be patentable;
(b) Consideration of a request for continued examination in compliance with § 1.114 (for a utility or plant application only); or
(c) Express abandonment of the application. Such express abandonment may be in favor of a continuing application, but not a CPA under 37 CFR 1.53(d).

Petition Fee

☐ Applicant claims SMALL ENTITY status. See 37 CFR 1.27.

☐ Applicant is no longer claiming SMALL ENTITY status. See 37 CFR 1.27(g)(2).

☐ Applicant(s) status remains as SMALL ENTITY.

☒ Applicant(s) status remains as other than SMALL ENTITY

Reason for withdrawal from issue

◯ One or more claims are unpatentable ◉ Consideration of a request for continued examination (RCE) (List of Required Documents and Fees) ◯ Applicant hereby expressly abandons the instant application (any attorney/agent signing for this reason must have power of attorney pursuant to 37 CFR 1.32(b)).
RCE request,submission, and fee. ☐ I certify, in accordance with 37 CFR 1.4(d)(4) that : The RCE request ,submission, and fee have already been filed in the above-identified application on ☒ Are attached.
THIS PORTION MUST BE COMPLETED BY THE SIGNATORY OR SIGNATORIES I certify, in accordance with 37 CFR 1.4(d)(4) that I am: ◉ An attorney or agent registered to practice before the Patent and Trademark Office who has been given power of attorney in this application. ◯ An attorney or agent registered to practice before the Patent and Trademark Office, acting in a representative capacity. ◯ A sole inventor ◯ A joint inventor; I certify that I am authorized to sign this submission on behalf of all of the inventors ◯ A joint inventor; all of whom are signing this e-petition ◯ The assignee of record of the entire interest that has properly made itself of record pursuant to 37 CFR 3.71

Signature	/Aaron M. Davis/
Name	Aaron Davis
Registration Number	62027

UNITED STATES PATENT AND TRADEMARK OFFICE

Commissioner for Patents
United States Patent and Trademark Office
P.O. Box 1450
Alexandria, VA 22313-1450
www.uspto.gov

CROSSLEY PATENT LAW
236 South Third Street
#287
MONTROSE CO 81401

MAILED
SEP 12 2011
OFFICE OF PETITIONS

In re Application of	:	
Ron Turnbull	:	
Application No. 12/611,092	:	DECISION ON PETITION
Filed: November 2, 2009	:	
Attorney Docket No. 09-09-25PA	:	

This is a decision on the petition under the unintentional provisions of 37 CFR 1.137(b), filed September 2, 2011, to revive the above-identified application.

The petition is **GRANTED**.

This application became abandoned for failure to timely pay the issue fee on or before July 8, 2011, as required by the Notice of Allowance and Fee(s) Due, mailed April 8, 2011. Accordingly, the date of abandonment of this application is July 9, 2011. A Notice of Abandonment was mailed on July 26, 2011.

The petition satisfies the requirements of 37 CFR 1.137(b) in that petitioner has supplied (1) the reply in the form of payment of the issue fee of $755, (2) the petition fee of $810, and (3) a proper statement of unintentional delay. Accordingly, the issue fee is accepted as being unintentionally delayed.

Telephone inquiries concerning this decision should be directed to Kimberly Inabinet at (571) 272-4618.

This application is being referred to the Office of Data Management for further processing into a patent.

/Kimberly A. Inabinet/

Kimberly A. Inabinet
Petitions Examiner
Office of Petitions

Doc Code: PPH.PCT.652
Document Description: Petition to make special under PCT-Patent Pros Hwy

PTO/SB/20PCT-KR (06-10)
Approved for use through 01/31/2012. OMB 0651-0058
U.S. Patent and Trademark Office; U. S. DEPARTMENT OF COMMERCE
Under the Paperwork Reduction Act of 1995, no persons are required to respond to a collection of information unless it displays a valid OMB control number.

REQUEST FOR PARTICIPATION IN THE PATENT COOPERATION TREATY - PATENT PROSECUTION HIGHWAY (PCT-PPH) PILOT PROGRAM BETWEEN THE KOREAN INTELLECTUAL PROPERTY OFFICE (KIPO) AND THE USPTO

Application No:	12/611,095	Filing date:	11/02/2009
First Named Inventor:	Jeffrey Paynter		
Title of the Invention:	Insertion Coupling Coaxial Connector		

THIS REQUEST FOR PARTICIPATION IN THE PCT-PPH PILOT PROGRAM ALONG WITH THE REQUIRED DOCUMENTS MUST BE SUBMITTED VIA EFS-WEB. INFORMATION REGARDING EFS-WEB IS AVAILABLE AT HTTP://WWW.USPTO.GOV/EBC/EFS_HELP.HTML

APPLICANT HEREBY REQUESTS PARTICIPATION IN THE PCT-PPH PROGRAM AND PETITIONS TO MAKE THE ABOVE-IDENTIFIED APPLICATION SPECIAL UNDER THE PCT-PPH PROGRAM.

The above-identified application is (1) a national stage entry of the corresponding PCT application, or (2) a national stage entry of another PCT application which claims priority to the corresponding PCT application, or (3) a national application that claims domestic/ foreign priority to the corresponding PCT application, or (4) a national application which forms the basis for the priority claim in the corresponding PCT application, or (5) a continuing application of a U.S. application that satisfies one of (1) to (4) above, or (6) a U.S. application that claims domestic benefit to a U.S. provisional application which forms the basis for the priority claim in the corresponding PCT application.

The corresponding PCT application number(s) is/are: PCT/US09/63315

The international date of the corresponding PCT application(s) is/are: 11/04/2009

I. List of Required Documents:

a. **A copy of the latest international work product (WO/ISA, WO/IPEA, or IPER) in the above–identified corresponding PCT application(s)**

☑ Is attached.

☐ Is not attached because the document is already in the U.S. application.

b. **A copy of all claims which were indicated as having novelty, inventive step and industrial applicability in the above-identified corresponding PCT application(s).**

☑ Is attached.

☐ Is not attached because the document is already in the U.S. application.

c. **English translations of the documents in a. and b. above are attached (if the documents are not in the English language). A statement that the English translation is accurate is attached for the document in b. above.**

This collection of information is required by 35 U.S.C. 119, 37 CFR 1.55, and 37 CFR 1.102(d). The information is required to obtain or retain a benefit by the public, which is to file (and by the USPTO to process) an application. Confidentiality is governed by 35 U.S.C. 122 and 37 CFR 1.11 and 1.14. This collection is estimated to take 2 hours to complete, including gathering, preparing, and submitting the completed application form to the USPTO. Time will vary depending upon the individual case. Any comments on the amount of time you require to complete this form and/or suggestions for reducing this burden should be sent to the Chief Information Officer, U.S. Patent and Trademark Office, U.S. Department of Commerce, P.O. Box 1450, Alexandria, VA 22313-1450. DO NOT SEND FEES OR COMPLETED FORMS TO THIS ADDRESS.

PTO/SB/20PCT-KR (06-10)
Approved for use through 01/31/2012. OMB 0651-0058
U.S.Patent and Trademark Office; U.S. DEPARTMENT OF COMMERCE
Under the Paperwork Reduction Act of 1995, no persons are required to respond to a collection of information unless it displays a valid OMB control number.

REQUEST FOR PARTICIPATION IN THE PCT-PPH PILOT PROGRAM BETWEEN THE KIPO AND THE USPTO

(continued)

Application No.:	12/611,095
First Named Inventor:	Jeffrey Paynter

d. **(1) An information disclosure statement listing the documents cited in the international work products (ISR, WO/ISA, WO/IPEA, IPER) of the corresponding PCT application.**

☑ Is attached

☐ Has already been filed in the above-identified U.S. application on _____

(2) Copies of all documents (except) for U.S. patents or U.S. patent application publications)

☑ Are attached.

Have already been filed in the above-identified U.S. application on _____

II. Claims Correspondence Table:

Claims in US Application	Patentable Claims in the corresponding PCT Application	Explanation regarding the correspondence
1	1	direct
2	2	direct
3	3	direct
4	4	direct
5	5	direct
6	6	direct
7	7	direct
8	8	direct
9	9	direct
10	10	direct
11	11	direct
12	12	direct
13	13	direct
14	14	direct
15	15	direct
16	16	direct
17	17	direct
18	18	direct
19	19	direct

III. All the claims in the US application sufficiently correspond to the patentable claims in the corresponding PCT application.

Signature /Andrew Babcock, Reg. #44517/	Date 10/20/2010
Name (Print/Typed) Andrew Babcock	Registration Number 44517

Privacy Act Statement

The **Privacy Act of 1974 (P.L. 93-579)** requires that you be given certain information in connection with your submission of the attached form related to a patent application or patent. Accordingly, pursuant to the requirements of the Act, please be advised that: (1) the general authority for the collection of this information is 35 U.S.C. 2(b)(2); (2) furnishing of the information solicited is voluntary; and (3) the principal purpose for which the information is used by the U.S. Patent and Trademark Office is to process and/or examine your submission related to a patent application or patent. If you do not furnish the requested information, the U.S. Patent and Trademark Office may not be able to process and/or examine your submission, which may result in termination of proceedings or abandonment of the application or expiration of the patent.

The information provided by you in this form will be subject to the following routine uses:

1. The information on this form will be treated confidentially to the extent allowed under the Freedom of Information Act (5 U.S.C. 552) and the Privacy Act (5 U.S.C 552a). Records from this system of records may be disclosed to the Department of Justice to determine whether disclosure of these records is required by the Freedom of Information Act.
2. A record from this system of records may be disclosed, as a routine use, in the course of presenting evidence to a court, magistrate, or administrative tribunal, including disclosures to opposing counsel in the course of settlement negotiations.
3. A record in this system of records may be disclosed, as a routine use, to a Member of Congress submitting a request involving an individual, to whom the record pertains, when the individual has requested assistance from the Member with respect to the subject matter of the record.
4. A record in this system of records may be disclosed, as a routine use, to a contractor of the Agency having need for the information in order to perform a contract. Recipients of information shall be required to comply with the requirements of the Privacy Act of 1974, as amended, pursuant to 5 U.S.C. 552a(m).
5. A record related to an International Application filed under the Patent Cooperation Treaty in this system of records may be disclosed, as a routine use, to the International Bureau of the World Intellectual Property Organization, pursuant to the Patent Cooperation Treaty.
6. A record in this system of records may be disclosed, as a routine use, to another federal agency for purposes of National Security review (35 U.S.C. 181) and for review pursuant to the Atomic Energy Act (42 U.S.C. 218(c)).
7. A record from this system of records may be disclosed, as a routine use, to the Administrator, General Services, or his/her designee, during an inspection of records conducted by GSA as part of that agency's responsibility to recommend improvements in records management practices and programs, under authority of 44 U.S.C. 2904 and 2906. Such disclosure shall be made in accordance with the GSA regulations governing inspection of records for this purpose, and any other relevant (*i.e.*, GSA or Commerce) directive. Such disclosure shall not be used to make determinations about individuals.
8. A record from this system of records may be disclosed, as a routine use, to the public after either publication of the application pursuant to 35 U.S.C. 122(b) or issuance of a patent pursuant to 35 U.S.C. 151. Further, a record may be disclosed, subject to the limitations of 37 CFR 1.14, as a routine use, to the public if the record was filed in an application which became abandoned or in which the proceedings were terminated and which application is referenced by either a published application, an application open to public inspection or an issued patent.
9. A record from this system of records may be disclosed, as a routine use, to a Federal, State, or local law enforcement agency, if the USPTO becomes aware of a violation or potential violation of law or regulation.

UNITED STATES PATENT AND TRADEMARK OFFICE

UNITED STATES DEPARTMENT OF COMMERCE
United States Patent and Trademark Office
Address: COMMISSIONER FOR PATENTS
P.O. Box 1450
Alexandria, Virginia 22313-1450
www.uspto.gov

APPLICATION NO.	FILING DATE	FIRST NAMED INVENTOR	ATTORNEY DOCKET NO.	CONFIRMATION NO.
12/611,095	11/02/2009	Jeffery Paynter	9092	1796

78847 7590 11/16/2010

Babcock IP, PLLC
P.O. Box 488
Bridgman, MI 49106

EXAMINER	
GIRARDI, VANESSA MARY	
ART UNIT	PAPER NUMBER
2833	
MAIL DATE	DELIVERY MODE
11/16/2010	PAPER

Please find below and/or attached an Office communication concerning this application or proceeding.

The time period for reply, if any, is set in the attached communication.

UNITED STATES PATENT AND TRADEMARK OFFICE

Commissioner for Patents
United States Patent and Trademark Office
P.O. Box 1450
Alexandria, VA 22313-1450
www.uspto.gov

Babcock IP, PLLC
P.O. Box 488
Bridgman MI 49106

In re Application of
PAYNTER et al.
Application No.: 12/611,095
Filed: 02 November 2009
Attorney Docket No.: 9092
For: INSERTION COUPLING COAXIAL CONNECTOR

: DECISION ON REQUEST TO
: PARTICIPATE IN THE PCT PATENT
: PROSECUTION HIGHWAY PILOT
: PROGRAM AND PETITION
: TO MAKE SPECIAL UNDER
: 37 CFR 1.102(d)

This is a decision on the request to participate in the PCT Patent Prosecution Highway (PCT-PPH) pilot program and the petition under 37 CFR 1.102(a), filed 20 October 2010, to make the above-identified application special.

The request and petition are **GRANTED**.

Discussion

A grantable request to participate in the PCT-PPH pilot program and petition to make special require:

(1) The U.S. application must disclose an eligible relationship to one or more PCT applications where the ISA or IPEA are the JPO, EPO, KIPO, or USPTO;

(2) At least one claim in the PCT application has novelty, inventive step, and industrial applicability and must be free of any observations in Box VIII in the latest work product in the international stage or applicant must identify and explain why the claim(s) is/are not subject to the observation in Box VIII;

(3) Applicant must submit a copy of the claim(s) from the PCT application(s) that have novelty, inventive step, and industrial applicability along with an English translation thereof and a statement that the English translation is accurate, if the claims are not in the English language;

(4) All the claims in the U.S. application must sufficiently correspond or be amended to sufficiently correspond to the claim(s) that have novelty, inventive step, and industrial applicability in the PCT application(s);

(5) Examination of the U.S. application has not begun;

(6) Applicant must submit a copy of the latest international work product from the PCT application indicating that the claim(s) have novelty, inventive step, and industrial applicability along with an English translation thereof and a statement that the English translation is accurate

if the latest international work product is not in the English language;

(7) Applicant must submit an IDS listing the documents cited by the PCT examiner in the international work product along with copies of documents except U.S. patents or U.S. patent application publications.

The request to participate in the PCT-PPH pilot program and petition comply with the above requirements. Accordingly, the above-identified application has been accorded "special" status.

Telephone inquiries concerning this decision should be directed to Lee W. Young at 571-272-4549.

All other inquiries concerning the examination or status of the application is accessible in the PAIR system at http://www.uspto.gov/ebc.index.html.

This application will be forwarded to the examiner for action on the merits commensurate with this decision once this application's formality reviews have been completed.

Lee W. Young
TQAS Technology Center 2800 - Semiconductors,
Electrical & Optical Systems & Components

UNITED STATES PATENT AND TRADEMARK OFFICE

UNITED STATES DEPARTMENT OF COMMERCE
United States Patent and Trademark Office
Address: COMMISSIONER FOR PATENTS
P.O. Box 1450
Alexandria, Virginia 22313-1450
www.uspto.gov

APPLICATION NO.	FILING DATE	FIRST NAMED INVENTOR	ATTORNEY DOCKET NO.	CONFIRMATION NO.
12/611,261	11/03/2009	Jun ISHII	9982-67U1 (1448US)	2116

570 7590 11/16/2010

PANITCH SCHWARZE BELISARIO & NADEL LLP
ONE COMMERCE SQUARE
2005 MARKET STREET, SUITE 2200
PHILADELPHIA, PA 19103

EXAMINER	
PATEL, ISHWARBHAI B	

ART UNIT	PAPER NUMBER
2835	

NOTIFICATION DATE	DELIVERY MODE
11/16/2010	ELECTRONIC

Please find below and/or attached an Office communication concerning this application or proceeding.

The time period for reply, if any, is set in the attached communication.

Notice of the Office communication was sent electronically on above-indicated "Notification Date" to the following e-mail address(es):

usptomail@panitchlaw.com

UNITED STATES PATENT AND TRADEMARK OFFICE

Commissioner for Patents
United States Patent and Trademark Office
P.O. Box 1450
Alexandria, VA 22313-1450
www.uspto.gov

PANITCH SCHWARZE BELISARIO & NADEL LLP
ONE COMMERCE SQUARE
2005 MARKET STREET, SUITE 2200
PHILADELPHIA PA 19103

In re Application of
ISHII et al.
Application No.: 12/611,261
Filed: 03 November 2009
Attorney Docket No.: 9982-67U1 (1448US)
For: PRINTED CIRCUIT BOARD AND METHOD OF MANUFACTURING THE SAME

: DECISION ON REQUEST TO
: PARTICIPATE IN THE PATENT
: PROSECUTION HIGHWAY
: PROGRAM AND PETITION
: TO MAKE SPECIAL UNDER
: 37 CFR 1.102(a)

This is a decision on the request to participate in the Patent Prosecution Highway (PPH) program and the petition under 37 CFR 1.102(a), filed 12 October 2010, to make the above-identified application special.

The request and petition are **GRANTED**.

Discussion

A grantable request to participate in the PPH pilot program and petition to make special require:

1. The U.S. application is
    a. a Paris Convention application which either
        i. validly claims priority under 35 U.S.C. 119(a) and 37 CFR 1.55 to one or more applications filed in the JPO, or
        ii. validly claims priority to a PCT application that contains no priority claims, or
    b. a national stage application under the PCT (an application which entered the national stage in the U.S. from a PCT international application after compliance with 35 U.S.C. 371), which PCT application
        i. validly claims priority to an application filed in the JPO, or
        ii. validly claims priority to a PCT application that contains no priority claims, or
        iii. contains no priority claim, or
    c. a so-called bypass application filed under 35 U.S.C. 111(a) which validly claims benefit under 35 U.S.C. 120 to a PCT application, which PCT application
        i. validly claims priority to an application filed in the JPO, or
        ii. validly claims priority to a PCT application that contains no priority claims, or

iii. contains no priority claim;

2. Applicant must submit a copy of:
   a. The allowable/patentable claim(s) from the JPO application(s);
   b. An English translation of the allowable/patentable claim(s) and
   c. A statement that the English translation is accurate;
3. Applicant must:
   a. Ensure all the claims in the U.S. application must sufficiently correspond or be amended to sufficiently correspond to the allowable/patentable claim(s) in the JPO application(s) and
   b. Submit a claims correspondence table in English;
4. Examination of the U.S. application has not begun;
5. Applicant must submit:
   a. Documentation of prior office action:
      i. a copy of the office action(s) just prior to the "Decision to Grant a Patent" from each of the JPO application(s) containing the allowable/patentable claim(s) or
      ii. if the allowable/patentable claims(s) are from a "Notification of Reasons for Refusal" then the Notification of Reasons for Refusal or
      iii. if the JPO application is a first action allowance then no office action from the JPO is necessary should be indicated on the request/petition form;
   b. An English language translation of the JPO Office action from (5)(a)(i)-(ii) above
   c. A statement that the English translation is accurate;
6. Applicant must submit:
   a. An IDS listing the documents cited by the JPO examiner in the JPO office action (unless already submitted in this application)
   b. Copies of the documents except U.S. patents or U.S. patent application publications (unless already submitted in this application);

The request to participate in the PPH pilot program and petition comply with the above requirements. Accordingly, the above-identified application has been accorded "special" status.

Inquiries concerning this decision should be directed to Lee W. Young at 571-272-4549.

All other inquiries concerning the examination or status of the application is accessible in the PAIR system at http://www.uspto.gov/ebc.index.html.

This application will be forwarded to the examiner for action on the merits commensurate with this decision.

Lee W. Young
TQAS
Technology Center 2800

UNITED STATES PATENT AND TRADEMARK OFFICE

Commissioner for Patents
United States Patent and Trademark Office
P.O. Box 1450
Alexandria, VA 22313-1450
www.uspto.gov

MAILED

SEP 22 2010

OFFICE OF PETITIONS

ALFRED GNADINGER
19 LEAMING ROAD
COLORADO SPRINGS, CO 80906-4209

In re Application of	:	
Viorel Olariu	:	
Application No. 12/611,298	:	ON PETITION
Filed: November 3, 2009	:	
Attorney Docket No. ALB 004	:	

This is a decision on the petition filed in the above-identified application.

The petition is **DISMISSED.**

The rules and statutory provisions governing the operations of the U.S. Patent and Trademark Office require payment of a fee on filing each petition under the unintentional provisions of 37 CFR 1.137(b) to revive an abandoned application for patent based on unintentional delay or to accept an unintentionally delayed payment of a fee for issuing a patent. In this instance, the fee required by law is $1,620. If applicant can qualify as a "small entity" and does so prior to or together with the payment of the fee, the fee will be one-half of the amount indicated. *See* 37 CFR 1.27.

The petition in the above-identified application was not accompanied by payment of the required fee. No consideration on the merits can be given to the petition until the required fee is received.

However, if petitioner contests the abandonment of the above application and believes that no fee should be assessed, a petition under 37 CFR 1.181 to withdraw the holding of abandonment may be more appropriate. *See* MPEP 711.03(c)(I)(A) "Petition To Withdraw Holding of Abandonment Based on Failure To Receive Office Action". Petitioner should note that filing a petition under 37 CFR 1.181 does not necessarily guarantee that it will be granted.

Further correspondence with respect to this matter should be addressed as follows:

By mail:	Mail Stop PETITIONS Commissioner for Patents, Post Office Box 1450 Alexandria, VA 22313-1450
By hand:	Customer Service Window Mail Stop Petitions Randolph Building, 401 Dulany Street Alexandria, VA 22314
By fax:	(571) 273-8300 - ATTN: Office of Petitions

Any questions concerning this matter may be directed to the undersigned at (571) 272-6059.

A. Kelley

Alicia Kelley
Petitions Examiner
Office of Petitions

UNITED STATES PATENT AND TRADEMARK OFFICE

Commissioner for Patents
United States Patent and Trademark Office
P.O. Box 1450
Alexandria, VA 22313-1450
www.uspto.gov

MAILED

NOV 02 2010

OFFICE OF PETITIONS

ALFRED GNADINGER
19 LEAMING ROAD
COLORADO SPRINGS, CO 80906-4209

In re Application of	:	
Viorel Olariu	:	
Application No. 12/611,298	:	ON PETITION
Filed: November 3, 2009	:	
Attorney Docket No. ALB 004	:	

This is a decision on the renewed petition under the unintentional provisions of 37 CFR 1.137(b), filed October 12, 2010, to revive the above-identified application.

The petition is **DISMISSED**.

The application became abandoned for failure to reply in a timely manner to the Notice to File Missing Parts of Nonprovisional Application (Notice), mailed November 18, 2009. The Notice set a period for reply of two (2) months from the mail date of the Notice. No extensions of time under the provisions of 37 CFR 1.136(a) were obtained. Accordingly, the application became abandoned on January 19, 2010. A Notice of Abandonment was mailed July 27, 2010.

A grantable petition under 37 CFR 1.137(b) must be accompanied by: (1) the required reply, unless previously filed; (2) the petition fee as set forth in 37 CFR 1.17(m); and (3) a statement that the entire delay in filing the required reply from the due date for the reply until the filing of a grantable petition pursuant to 37 CFR 1.137(b) was unintentional. Where there is a question as to whether either the abandonment or the delay in filing a petition under 37 CFR 1.137 was unintentional, the Director may require additional information. See MPEP 711.03(c)(II)(C) and (D).

The instant petition lacks item (3), the statement of unintentional delay since the renewed petition is not signed.

Any request for reconsideration of this decision must be submitted within TWO (2) MONTHS from the mail date of this decision. Extensions of time under 37 CFR 1.136(a) are permitted. The reconsideration request should include a cover letter entitled "Renewed Petition under 37 CFR 1.137(b)." This is **not** a final agency action within the meaning of 5 U.S.C. § 704.

Further correspondence with respect to this matter should be addressed as follows:

By Mail:
Mail Stop PETITION
Commissioner for Patents
P. O. Box 1450
Alexandria, VA 22313-1450

By Hand: U. S. Patent and Trademark Office
Customer Service Window, Mail Stop Petitions
Randolph Building
401 Dulany Street
Alexandria, VA 22314

By Internet: EFS-Web[1]

The centralized facsimile number is **(571) 273-8300.**

Telephone inquiries concerning this decision should be directed to the undersigned at (571) 272-6059.

Alicia Kelley
Petitions Examiner
Office of Petitions

[1] www.uspto.gov/ebc/efs_help.html (for help using EFS-Web call the Patent Electronic Business Center at (866) 217-9197)

UNITED STATES PATENT AND TRADEMARK OFFICE

Commissioner for Patents
United States Patent and Trademark Office
P.O. Box 1450
Alexandria, VA 22313-1450
www.uspto.gov

ALFRED GNADINGER
19 LEAMING ROAD
COLORADO SPRINGS, CO 80906-4209

MAILED

JAN 20 2011

OFFICE OF PETITIONS

In re Application of
Viorel Olariu
Application No. 12/611,298
Filed: November 3, 2009
Attorney Docket No. ALB 004

ON PETITION

This is a decision on the renewed petition under the unintentional provisions of 37 CFR 1.137(b), filed December 21, 2010, to revive the above-identified application.

The petition is **GRANTED**.

The application became abandoned for failure to reply in a timely manner to the Notice to File Missing Parts of Nonprovisional Application (Notice), mailed November 18, 2009. The Notice set a period for reply of two (2) months from the mail date of the Notice. No extensions of time under the provisions of 37 CFR 1.136(a) were obtained. Accordingly, the application became abandoned on January 19, 2010. A Notice of Abandonment was mailed July 27, 2010.

The petition satisfies the requirements of 37 CFR 1.137(b) in that petitioner has supplied (1) the reply in the form of a declaration, substitute specification, replacement claims and surcharge of $65, (2) the petition fee of $810, and (3) an adequate statement of unintentional delay.

Petitioner should note that 37 CFR 1.137(b)(3), requires a statement that "the entire delay in filing the required reply from the due date for the reply until the filing of a grantable petition pursuant to 37 CFR 1.137(b) was unintentional." Since the statement appearing in the petition varies from the language required by 37 CFR 1.137(b)(3), the statement is being construed as the required statement. Petitioner must notify the Office if this is **not** a correct reading of the statement appearing in the petition.

This application file is being referred to the Office of Patent Application Processing (OPAP) for further pre-examination processing.

Telephone inquiries concerning this decision should be directed to the undersigned at (571) 272-6059. Telephone inquiries related to OPAP processing should be directed to their hotline at (271) 272-4000

A. Kelley

Alicia Kelley
Petitions Examiner
Office of Petitions

UNITED STATES PATENT AND TRADEMARK OFFICE

Commissioner for Patents
United States Patent and Trademark Office
P.O. Box 1450
Alexandria, VA 22313-1450
www.uspto.gov

ALSTON & BIRD LLP
BANK OF AMERICA PLAZA
101 SOUTH TRYON STREET, SUITE 4000
CHARLOTTE, NC 28280-4000

MAILED

MAR 14 2011

OFFICE OF PETITIONS

In re Application of :
ROUSE, Alan S. et al. :
Application No. 12/611,377 : DECISION ON PETITION
Filed: November 03, 2009 : TO WITHDRAW
Attorney Docket No. **P29568-US1** : FROM RECORD
:

This is a decision on the Request to Withdraw as attorney or agent of record under 37 C.F.R. § 1.36(b), filed February 07, 2011.

The request is moot because a revocation of power of attorney has been previously filed.

A review of the file record indicates that the power of attorney to **ALSTON & BIRD LLP** has been revoked by the assignee of the patent application on February 14, 2011. Accordingly, the request to withdraw under 37 C.F.R. § 1.36(b) is moot.

All future communications from the Office will continue to be directed to the below-listed address until otherwise notified by applicant.

Telephone inquires concerning this decision should be directed to Tredelle Jackson at 571-272-2783.

/Tredelle D. Jackson/
Paralegal Specialist
Office of Petitions

cc: **ERICSSON INC.**
6300 LEGACY DRIVE
M/S EVR 1-C-11
PLANO TX 75024

UNITED STATES PATENT AND TRADEMARK OFFICE

Commissioner for Patents
United States Patent and Trademark Office
P.O. Box 1450
Alexandria, VA 22313-1450
www.uspto.gov

FOLEY HOAG, LLP
PATENT GROUP, WORLD TRADE CENTER WEST
155 SEAPORT BLVD
BOSTON MA 02110

MAILED
JUL 29 2011
OFFICE OF PETITIONS

In re Application of
John E. Rosenstengel
Application No. 12/611,413
Filed: November 3, 2009
Attorney Docket No. ICD-03201

DECISION ON PETITION
TO WITHDRAW FROM RECORD

This is a decision on the Request to Withdraw as attorney or agent of record under 37 C.F.R. § 1.36(b), filed July 11, 2011.

The request is **APPROVED**.

A grantable request to withdraw as attorney/agent of record must be signed by every attorney/agent seeking to withdraw or contain a clear indication that one attorney is signing on behalf of another/others. The Office will require the practitioner(s) to certify that he, she or they have: (1) given reasonable notice to the client, prior to the expiration of the reply period, which the practitioner(s) intends to withdraw from employment; (2) delivered to the client or a duly authorized representative of the client all papers and property (including funds) to which the client is entitled; and (3) notified the client of any replies that may be due and the time frame within which the client must respond, pursuant to 37 CFR 10.40 (c).

The request was signed by Stephen B. Deutsch, on behalf of all attorneys/agents of record who are associated with Customer Number 25181.

All attorneys/agents associated with the Customer Number 25181 have been withdrawn. Applicant is reminded that there is no attorney of record at this time.

All future correspondence will be directed to the assignee at the address indicated below.

Currently, there is no outstanding Office action that requires a reply.

Telephone inquiries concerning this decision should be directed to the undersigned at (571) 272-7751. All other inquires concerning either the examination or status of the application should be directed to the Technology Center.

/Joan Olszewski/
Joan Olszewski
Petitions Examiner
Office of Petitions

cc: iCAD, Inc.
98 Spit Brook Road
Nashua, NH 03062

Doc Code: PET.AUTO Document Description: Petition automatically granted by EFS-Web	PTO/SB/64 U.S. Patent and Trademark Office Department of Commerce

Electronic Petition Request	PETITION FOR REVIVAL OF AN APPLICATION FOR PATENT ABANDONED UNINTENTIONALLY UNDER 37 CFR 1.137(b)
Application Number	12611537
Filing Date	03-Nov-2009
First Named Inventor	WILLIAM BAUSCH
Art Unit	2832
Examiner Name	ROBERT HORN
Attorney Docket Number	STAVENT
Title	VERTICALLY VENTED DRUM SHELL

The above-identified application became abandoned for failure to file a timely and proper reply to a notice or action by the United States Patent and Trademark Office. The date of abandonment is the day after the expiration date of the period set for reply in the office notice or action plus any extensions of time actually obtained.

APPLICANT HEREBY PETITIONS FOR REVIVAL OF THIS APPLICATION

NOTE: A grantable petition requires the following items:
(1) Petition fee;
(2) Reply and/or issue fee;
(3) Terminal disclaimer with disclaimer fee – required for all utility and plant applications filed before June 8, 1995; and for all design applications;
(4) Statement that the entire delay was unintentional.

Petition fee
The petition fee under 37CFR 1.17(m) is attached.

☐ Applicant claims SMALL ENTITY status. See 37 CFR 1.27.

☐ Applicant is no longer claiming SMALL ENTITY status. See 37 CFR 1.27(g)(2).

☒ Applicant(s) status remains as SMALL ENTITY.

☐ Applicant(s) status remains as other than SMALL ENTITY.

Issue Fee and Publication Fee :

Issue Fee and Publication Fee must accompany ePetition.

☒ Issue Fee Transmittal is attached

Drawing corrections and/ or other deficiencies.

◉ Drawing corrections and/ or other deficiencies are not required

○ I certify, in accordance with 37 CFR 1.4.(D)(4), that drawing corrections and/ or other deficiencies have previously been filed on

○ Drawing corrections and/ or other deficiencies are attached.

☒ STATEMENT: The entire delay in filing the required reply from the due date for the required reply until the filing of a grantable petition under 37 CFR 1.137(b) was unintentional.

THIS PORTION MUST BE COMPLETED BY THE SIGNATORY OR SIGNATORIES

I certify, in accordance with 37 CFR 1.4(d)(4) that I am:

◉ An attorney or agent registered to practice before the Patent and Trademark Office who has been given power of attorney in this application.

○ An attorney or agent registered to practice before the Patent and Trademark Office, acting in a representative capacity.

○ A sole inventor

○ A joint inventor; I certify that I am authorized to sign this submission on behalf of all of the inventors.

○ A joint inventor; all of whom are signing this e-petition.

○ The assignee of record of the entire interest that has properly made itself of record pursuant to 37 CFR 3.71.

Signature	/Christopher Casieri/
Name	Christopher Casieri
Registration Number	50919

UNITED STATES PATENT AND TRADEMARK OFFICE

Commissioner for Patents
United States Patent and Trademark Office
P.O. Box 1450
Alexandria, VA 22313-1450
www.uspto.gov

Decision Date : September 7,2011

In re Application of :

WILLIAM BAUSCH

Application No : 12611537

Filed : 03-Nov-2009

Attorney Docket No : STAVENT

DECISION ON PETITION

UNDER CFR 1.137(b)

This is an electronic decision on the petition under 37 CFR 1.137(b), filed September 7,2011 , to revive the above-identified application.

The petition is **GRANTED.**

The above-identified application became abandoned for failure to reply in a timely manner to the Notice of Allowance and Issue Fee(s) Due. The date of abandonment is the day after the expiration date of the period set for reply in the Notice.

The electronic petition satisfies the conditions for revival pursuant to the provisions of 37 CFR 1.137(b) in that (1) the reply in the form of payment of the Issue Fee and the Publication Fee (if necessary); (2) the petition fee as set forth in 37 CFR 1.17 (m); (3) the drawing correction and/or other deficiencies (if necessary); and (4) the required statement of unintentional delay have been received. Accordingly, the Issue Fee payment is accepted as having been unintentionally delayed.

Telephone inquiries concerning this decision should be directed to the Patent Electronic Business Center (EBC) at 866-217-9197.

This application file is being directed to the Office of Data Management.

Office of Petitions

UNITED STATES PATENT AND TRADEMARK OFFICE

Commissioner for Patents
United States Patent and Trademark Office
P.O. Box 1450
Alexandria, VA 22313-1450
www.uspto.gov

Decision Date : August 12,2011

In re Application of :

KOICHI MATSUDA

DECISION ON PETITION

UNDER CFR 1.313(c)(2)

Application No : 12611593

Filed : 03-Nov-2009

Attorney Docket No : 03560.126555.1

This is an electronic decision on the petition under 37 CFR 1.313(c)(2), filed August 12,2011 , to withdraw the above-identified application from issue after payment of the issue fee.

The petition is **GRANTED.**

The above-identified application is withdrawn from issue for consideration of a submission under 37 CFR 1.114 (request for continued examination). See 37 CFR 1.313(c)(2).

Petitioner is advised that the issue fee paid in this application cannot be refunded. If, however, this application is again allowed, petitioner may request that it be applied towards the issue fee required by the new Notice of Allowance.

Telephone inquiries concerning this decision should be directed to the Patent Electronic Business Center (EBC) at 866-217-9197.

This application file is being referred to Technology Center AU 2889 for processing of the request for continuing examination under 37 CFR 1.114 .

Office of Petitions

Doc Code: PET.AUTO Document Description: Petition automatically granted by EFS-Web	PTO/SB/140 U.S. Patent and Trademark Office Department of Commerce

Electronic Petition Request	**PETITION TO WITHDRAW AN APPLICATION FROM ISSUE AFTER PAYMENT OF THE ISSUE FEE UNDER 37 CFR 1.313(c)**
Application Number	12611593
Filing Date	03-Nov-2009
First Named Inventor	KOICHI MATSUDA
Art Unit	2889
Examiner Name	KEVIN QUARTERMAN
Attorney Docket Number	03560.126555.1
Title	ORGANIC ELECTROLUMINESCENT DEVICE WITH SIN LAYER CONTAINING HYDROGEN AND FLUORINE

An application may be withdrawn from issue for further action upon petition by the applicant. To request that the Office withdraw an application from issue, applicant must file a petition under this section including the fee set forth in § 1.17(h) and a showing of good and sufficient reasons why withdrawal of the application from issue is necessary.

APPLICANT HEREBY PETITIONS TO WITHDRAW THIS APPLICATION FROM ISSUE UNDER 37 CFR 1.313(c).

A grantable petition requires the following items:
(1) Petition fee; and
(2) One of the following reasons:
(a) Unpatentability of one or more claims, which must be accompanied by an unequivocal statement that one or more claims are unpatentable, an amendment to such claim or claims, and an explanation as to how the amendment causes such claim or claims to be patentable;
(b) Consideration of a request for continued examination in compliance with § 1.114 (for a utility or plant application only); or
(c) Express abandonment of the application. Such express abandonment may be in favor of a continuing application, but not a CPA under 37 CFR 1.53(d).

Petition Fee

☐ Applicant claims SMALL ENTITY status. See 37 CFR 1.27.

☐ Applicant is no longer claiming SMALL ENTITY status. See 37 CFR 1.27(g)(2).

☐ Applicant(s) status remains as SMALL ENTITY.

☒ Applicant(s) status remains as other than SMALL ENTITY

Reason for withdrawal from issue

◯ One or more claims are unpatentable ◉ Consideration of a request for continued examination (RCE) (List of Required Documents and Fees) ◯ Applicant hereby expressly abandons the instant application (any attorney/agent signing for this reason must have power of attorney pursuant to 37 CFR 1.32(b)).
RCE request,submission, and fee. ☐ I certify, in accordance with 37 CFR 1.4(d)(4) that : The RCE request ,submission, and fee have already been filed in the above-identified application on ☒ Are attached.
THIS PORTION MUST BE COMPLETED BY THE SIGNATORY OR SIGNATORIES I certify, in accordance with 37 CFR 1.4(d)(4) that I am: ◉ An attorney or agent registered to practice before the Patent and Trademark Office who has been given power of attorney in this application. ◯ An attorney or agent registered to practice before the Patent and Trademark Office, acting in a representative capacity. ◯ A sole inventor ◯ A joint inventor; I certify that I am authorized to sign this submission on behalf of all of the inventors ◯ A joint inventor; all of whom are signing this e-petition ◯ The assignee of record of the entire interest that has properly made itself of record pursuant to 37 CFR 3.71

Signature	/Jason M. Okun/
Name	Jason M. Okun
Registration Number	48512

UNITED STATES PATENT AND TRADEMARK OFFICE

Commissioner for Patents
United States Patent and Trademark Office
P.O. Box 1450
Alexandria, VA 22313-1450
www.uspto.gov

August 30, 2011

KING & SPALDING
1180 PEACHTREE STREET , NE
ATLANTA GA 30309-3521

In re Application of	:	
Robert S. Takacs et al.	:	**DECISION ON PETITION**
Application No. 12611645	:	
Filed: 11/3/2009	:	***ACCEPTANCE OF COLOR***
Attorney Docket No. 17198.105012	:	***DRAWINGS***

This is a decision on the Petition to Accept Color Drawings under 37 C.F.R 1.84 (a) (2), received in the United States Patent and Trademark Office (USPTO) January 5, 2010.

The petition is **GRANTED**.

A grantable petition under 37 C.F.R. 1.84(a) (2) must be accompanied by the following.

1. The fee set forth under 37 C.F.R. 1.17(h),
2. Three (3) sets of the color drawings in question, or (1) set if filed via EFS, and
3. The specification contains appropriate language referring to the color drawings as the first paragraph in that portion of the specification relating to the brief description of the drawings.

The petition was accompanied by all of the required fees and drawings. The specification contains the appropriate language. Therefore, the petition is GRANTED.

Telephone inquires relating to this decision may be directed to the undersigned in the Office of Data Management at 571-272-4200.

/Don Fairchild/
Office of Data Management
Publications Branch

UNITED STATES PATENT AND TRADEMARK OFFICE

Commissioner for Patents
United States Patent and Trademark Office
P.O. Box 1450
Alexandria, VA 22313-1450
www.uspto.gov

STANFORD UNIVERSITY
1705 EL CAMINO REAL
PALO ALTO CA 94306

MAILED

JAN 27 2011

OFFICE OF PETITIONS

In re Application of :
BRITSCHGI et al. : DECISION ON PETITION
Application No. 12/611,664 :
Filed: 11/03/2009 :
Attorney Docket No. ASB-003UTL :

This is a decision on the petition under 37 CFR 1.137(b), filed December 10, 2010, to revive the above-identified application.

The petition is **granted**.

The above-identified application became abandoned for failure to file a timely response to the NOTICE TO COMPLY WITH REQUIREMENTS FOR PATENT APPLICATIONS CONTAINING NUCLEOTIDE SEQUENCE AND/OR AMINO ACID SEQUENCE DISCLOSURES, mailed February 17, 2010, which set a two-month extendable period to reply. No extensions of time under the provisions of 37 CFR 1.136(a) were obtained. Accordingly, the above-identified application became abandoned on April 18, 2010. A Notice of Abandonment was mailed on November 19, 2010.

Petitioner has met the requirements to revive the above-identified application pursuant to 37 CFR 1.137(b). Petitioner submitted the required reply, paid the petition fee, and made the proper statement of unintentional delay.

This matter is being referred to the Office of Patent Application Processing.

Telephone inquiries specific to this decision may be directed to the undersigned at (571) 272-3211.

Christina Tartera Donnell

Christina Tartera Donnell
Senior Petitions Attorney

UNITED STATES PATENT AND TRADEMARK OFFICE

Commissioner for Patents
United States Patent and Trademark Office
P.O. Box 1450
Alexandria, VA 22313-1450
www.uspto.gov

PETER K. TRZYNA, ESQ.
P O BOX 7131
CHICAGO, IL 60680

MAILED

AUG 18 2010

OFFICE OF PETITIONS

In re Application of :
Raymond B. Ryan :
Application No. 12/611,671 :
Filed: November 3, 2009 :
Attorney Docket No. Ryan-P2-09 :

DECISION ON PETITION
TO WITHDRAW
FROM RECORD

This is a decision on the Request to Withdraw as attorney or agent of record under 37 C.F.R. § 1.36(b), filed June 30, 2010.

The request is **NOT APPROVED.**

The Office strongly encourages practitioner(s) requesting withdrawal from representation as practitioner of record in an application to review the record to determine whether he or she is, in fact, of record and how he or she was made of record. For example, the practitioner(s) should determine whether he or she was appointed by naming each practitioner individually or through the use of a Customer Number.

In the instant application, the practitioner(s) were appointed via Registration Number however the request does not indicate a Registration Number. In view of the above, practitioners must withdraw as attorney of record in the same manner as appointed; therefore current request cannot be approved. Any subsequent request must withdraw all associated practitioner(s) in the same manner as appointed.

All future communications from the Office will continue to be directed to the above-listed address until properly notified.

There are no outstanding Office actions that require a reply.

Telephone inquires concerning this decision should be directed to the undersigned at (571) 272-6059.

Alicia Kelley
Petitions Examiner
Office of Petitions

UNITED STATES PATENT AND TRADEMARK OFFICE

Commissioner for Patents
United States Patent and Trademark Office
P.O. Box 1450
Alexandria, VA 22313-1450
www.uspto.gov

MAILED

SEP 17 2010

OFFICE OF PETITIONS

PETER K. TRZYNA, ESQ.
P O BOX 7131
CHICAGO, IL 60680

In re Application of	:	
Ryan et al.	:	DECISION ON PETITION
Application No. 12/611,671	:	TO WITHDRAW
Filed: November 3, 2009	:	FROM RECORD
Attorney Docket No. Ryan-P2-09	:	

This is a decision on the renewed Request to Withdraw as attorney or agent of record under 37 C.F.R. § 1.36(b), filed August 31, 2010.

The request is **APPROVED**.

A grantable request to withdraw as attorney/agent of record must be signed by every attorney/agent seeking to withdraw or contain a clear indication that one attorney is signing on behalf of another/others. The Office will require the practitioner(s) to certify that he, she or they have: (1) given reasonable notice to the client, prior to the expiration of the reply period, which the practitioner(s) intends to withdraw from employment; (2) delivered to the client or a duly authorized representative of the client all papers and property (including funds) to which the client is entitled; and (3) notified the client of any replies that may be due and the time frame within which the client must respond, pursuant to 37 CFR 10.40 (c).

The request was signed by Peter K. Trzyna, on behalf of all the practitioners of record.

Peter K. Trzyna has been withdrawn from record. Applicant is reminded that there is no attorney of record at this time.

The correspondence address of record has been changed and the new correspondence address is the address indicated below.

There are no Office actions that require a reply from the applicant.

Telephone inquires concerning this decision should be directed to the undersigned at (571) 272-6059. All other inquires concerning either the examination or status of the application should be directed to the Technology Center.

Alicia Kelley
Petitions Examiner
Office of Petitions

cc: RAYMOND B. RYAN
30 OLD KINGS HIGHWAY SOUTH, SUITE 250
DARIEN, CT 06820

UNITED STATES PATENT AND TRADEMARK OFFICE

UNITED STATES DEPARTMENT OF COMMERCE
United States Patent and Trademark Office
Address: COMMISSIONER FOR PATENTS
P.O. Box 1450
Alexandria, Virginia 22313-1450
www.uspto.gov

APPLICATION NUMBER	FILING OR 371(C) DATE	FIRST NAMED APPLICANT	ATTY. DOCKET NO./TITLE
12/611,671	11/03/2009	Raymond B. Ryan	Ryan-P2-09

CONFIRMATION NO. 2947

POWER OF ATTORNEY NOTICE

28710
PETER K. TRZYNA, ESQ.
P O BOX 7131
CHICAGO, IL 60680

OC000000043558115

Date Mailed: 09/16/2010

NOTICE REGARDING CHANGE OF POWER OF ATTORNEY

This is in response to the Power of Attorney filed 08/31/2010.

- The withdrawal as attorney in this application has been accepted. Future correspondence will be mailed to the new address of record. 37 CFR 1.33.

/atkelley/

Office of Data Management, Application Assistance Unit (571) 272-4000, or (571) 272-4200, or 1-888-786-0101

UNITED STATES PATENT AND TRADEMARK OFFICE

Commissioner for Patents
United States Patent and Trademark Office
P.O. Box 1450
Alexandria, VA 22313-1450
www.uspto.gov

FULBRIGHT & JAWORSKI L.L.P.
2200 ROSS AVENUE, SUITE 2800
DALLAS, TX 75201-2784

MAILED

DEC 13 2010

OFFICE OF PETITIONS

In re Application of :
Terry Cook : DECISION REFUSING STATUS
Application No. 12/611,685 : UNDER 37 CFR 1.47(b)
Filed: November 3, 2009 :
Attorney Docket No. 72514/P005US/10709549 :

This is in response to the petition under 37 CFR 1.47(b), filed May 14, 2010.

The petition is **DISMISSED**.

Rule 47 applicant is given TWO (2) MONTHS from the mailing date of this decision to reply, correcting the below-noted deficiencies. Any reply should be entitled "Request for Reconsideration of Petition Under 37 CFR 1.47(b)," and should only address the deficiencies noted below, except that the reply may include an oath or declaration executed by the non-signing inventor. **FAILURE TO RESPOND WILL RESULT IN ABANDONMENT OF THE APPLICATION.** Any extensions of time will be governed by 37 CFR 1.136(a).

A grantable petition under 37 CFR 1.47(b) requires:

(1) proof that the non-signing inventor cannot be reached after diligent effort or refuses to sign the oath or declaration after having been presented with the application papers (specification, claims and drawings);
(2) an acceptable oath or declaration in compliance with 35 U.S.C. §§ 115 and 116;
(3) the petition fee;
(4) a statement of the last known address of the non-signing inventor.
(5) proof of proprietary interest: and
(6) proof of irreparable damage.

Applicant lacks items (1) and (2) set forth above.

As to item (1), the applicable statute (35 U.S.C.§ 116) requires that a "diligent effort" have been expended in attempting to find or reach the non-signing inventor. *See* MPEP 409.03(a). The showing currently fails to demonstrate, with a documented showing, that a diligent effort was made to find or locate non-signing inventor Terry Cook, such that the declaration can be accepted under 37 CFR 1.47(b). Where inability to find or locate a named inventor(s) is alleged, a

statement of facts should be submitted that fully describes the exact facts which are relied on to establish that a *diligent effort* was made to locate the inventor.

Petitioner has not demonstrated that all efforts were expended in trying to locate inventor non-signing Terry Cook. In this regard, petitioner should, at the very least, conduct a search of the regional or national registry(s). The results of such search should be made in any future petition for reconsideration. *See* MPEP 409.03(d). Additionally, petitioner should state whether he has access to inventor Cook's personnel records and, if so, what does inspection of the records reveal as to a current address, forwarding address, or an address of the nearest living relative? What does inspection of the phone directories for those address locations reveal? Further, the petition fails to indicate that correspondence was ever mailed unsuccessfully to the inventor's last known address. Therefore, at the very least, petitioner should mail correspondence to the inventor's last known address, return receipt and/or forwarding address requested. If a forwarding address is provided, petitioner should then mail a complete copy of the application papers (specification, claims, drawings, oath, etc.) to Mr. Cook's address, return receipt requested, along with a cover letter of instructions which includes a deadline or a statement that no response will constitute a refusal. This sort of ultimatum lends support to a finding of refusal by conduct. If the papers are returned and all other attempts to locate or reach the inventor, e.g., through personnel records, co-workers, E-mail, the Internet or the telephone, etc., continue to fail, then applicant will have established that the inventor cannot be reached after diligent effort or has refused to join in the application. **The statements of facts must be signed, where at all possible, by a person having firsthand knowledge of the facts recited therein and should be accompanied by documentary evidence in support of the statement of facts.** It is important that the forthcoming communication contain statements of fact as opposed to conclusions.

Where there is an express or oral refusal, that fact, along with the time and place of the refusal, must be stated in an affidavit or declaration by the party to whom the refusal was made. Where there is a written refusal, a copy of the document(s) evidencing that refusal must be made part of the affidavit or declaration.

When it is concluded by the rule 47 applicant that an omitted inventor's conduct constitutes a refusal, all facts upon which that conclusion is based should be stated in an affidavit or declaration. If there is documentary evidence to support facts alleged in the affidavit or declaration, such evidence must be submitted.

Whenever an omitted inventor gives a reason for refusing to sign the application oath or declaration, that reason should be stated in the affidavit or declaration.

As to item (2), the declaration is defective since it is not in compliance with 37 CFR 1.63 and 1.64 or 1.175.

MPEP 409.03(b) (A) states,

> (A) The 37 CFR 1.47(b) applicant must make the oath required by 37 CFR 1.63 and 1.64 or 1.175. Where a corporation is the 37 CFR 1.47(b) applicant, an officer (President, Vice-President, Secretary, Treasurer, or Chief Executive Officer) thereof should normally sign the necessary oath or declaration. A corporation may authorize any person, including an attorney or agent registered to practice before the U.S. Patent and Trademark Office, to sign the application oath or declaration on its behalf. Where an oath or declaration is signed by a registered attorney or agent on behalf of a corporation, either proof of the attorney's or agent's authority in the form of a statement signed by an appropriate corporate officer must be submitted, or the attorney or agent may simply state that he or she is authorized to sign on behalf of the corporation. Where the oath or declaration is being signed on behalf of an assignee, see MPEP § 324. An inventor may not authorize another individual to act as his or her agent to sign the application oath or declaration on his or her behalf. *Staeger v. Commissioner*, 189 USPQ 272 (D.D.C. 1976), in re *Striker*, 182 USPQ 507 (Comm'r Pat. 1973). Where an application is executed by one other that the inventor, the declaration required by 37 CFR 1.63 must state the full name, residence, post office address, and citizenship of the nonsigning inventor. Also, the title or position of the person signing must be stated if signing on behalf of a corporation under 37 CFR 1.47(b).

Further correspondence with respect to this matter should be addressed as follows:

By mail:	Mail Stop PETITIONS Commissioner for Patents Post Office Box 1450 Alexandria, VA 22313-1450
By hand:	Customer Service Window Mail Stop Petitions Randolph Building 401 Dulany Street Alexandria, VA 22314
By fax:	(571) 273-8300 ATTN: Office of Petitions

Telephone inquiries should be directed to Irvin Dingle at (571) 272-3210.

David Bucci
Petitions Examiner
Office of Petitions

UNITED STATES PATENT AND TRADEMARK OFFICE

Commissioner for Patents
United States Patent and Trademark Office
P.O. Box 1450
Alexandria, VA 22313-1450
www.uspto.gov

FULBRIGHT & JAWORSKI L.L.P.
2200 ROSS AVENUE
SUITE 2800
DALLAS, TX 75201-2784

MAILED
JUN 07 2011
OFFICE OF PETITIONS

In re Application of :
Terry Cook : DECISION GRANTING STATUS
Application No. 12/611,685 : UNDER 37 CFR 1.47(b)
Filed: November 3, 2009 :
Attorney Docket No. 72514/P005US/10709549 :

This is a decision on the petition filed, March 14, 2011, requesting reconsideration of a decision mailed December 10, 2010, which refused to accord 37 CFR 1.47(b) status to the above-identified application.

The petition is **GRANTED.**

Petitioner has shown that the non-signing inventor, Terry Cook, cannot be located to join in the filing of the above-identified application.

The application and papers have been reviewed and found in compliance with 37 CFR 1.47(b). This application is hereby accorded Rule 1.47(b) status.

As provided in 37 CFR 1.47(c), this Office will forward notice of this application's filing to the non-signing inventor at the address given in the petition. Notice of the filing of this application will also be published in the Official Gazette.

As authorized, the $65 one month extension of time under 37 CFR 1.136(a) is being charged to petitioner's Deposit Account No. 06-2380.

This matter is being referred to the Office of Patent Application Processing.

Telephone inquiries regarding this decision should be directed to Irvin Dingle at (571) 272-3210.

David Bucci
Petitions Examiner
Office of Petitions

UNITED STATES PATENT AND TRADEMARK OFFICE

Commissioner for Patents
United States Patent and Trademark Office
P.O. Box 1450
Alexandria, VA 22313-1450
www.uspto.gov

Terry Cook
4231 161st Ave. SE
Bellevue, WA 98006

MAILED
JUN 07 2011
OFFICE OF PETITIONS

In re Application of
Terry Cook
Application No. 12/611,685
Filed: November 3, 2009
For: METHOD FOR DISTRIBUTING CAMPAIGN METADATA ACROSS MULTIPLE SMALL CLIENTS

Dear Mr. Cook:

You are named as the inventor in the above identified United States patent application, filed under the provisions of 35 U.S.C. 116 (United States Code), and 37 CFR 1.47(b), Rules of Practice in Patent Cases. Should a patent be granted on the application you will be designated therein as a joint inventor.

As a named inventor you are entitled to inspect any paper in the file wrapper of the application, order copies of all or any part thereof (at a prepaid cost per 37 CFR 1.19) or make your position of record in the application. Alternatively, you may arrange to do any of the preceding through a registered patent attorney or agent presenting written authorization from you. If you care to join in the application, counsel of record (see below) would presumably assist you. Joining in the application would entail the filing of an appropriate oath or declaration by you pursuant to 37 CFR 1.63.

Telephone inquiries regarding this communication should be directed to the Irvin Dingle at (571) 272-3210. Requests for information regarding your application should be directed to the File Information Unit at (703) 308-2733. Information regarding how to pay for and order a copy of the application, or a specific paper in the application, should be directed to Certification Division at (571) 272-3150 or 1 (800) 972-6382 (outside the Washington D.C. area).

David Bucci
Petitions Examiner
Office of Petitions

cc: Fulbright & Jaworski L.L.P.
2200 Ross Avenue
Suite 2800
Dallas, TX 75201-2784

UNITED STATES PATENT AND TRADEMARK OFFICE

Commissioner for Patents
United States Patent and Trademark Office
P.O. Box 1450
Alexandria, VA 22313-1450
www.uspto.gov

Casimir Jones, S.C.
2275 Deming Way, Suite 310
Middleton, WI 53562

MAILED

NOV 29 2010

OFFICE OF PETITIONS

In re Application of	:	
Ganesh Vasudevan, et. al.	:	DECISION REFUSING STATUS
Application No. 12/611,711	:	UNDER 37 CFR 1.47(a)
Filed: November 3, 2009	:	
Attorney Docket No. RENOVAR-14633/US-4/CON	:	

This is in response to the petition under 37 CFR 1.47(a), filed June 8, 2010.

The petition is **DISMISSED**.

A grantable petition under 37 CFR 1.47(a) requires: (1) proof that the non-signing inventor cannot be reached or refuses to sign the oath or declaration after having been presented with the application papers (specification, claims and drawings); (2) an acceptable oath or declaration in compliance with 35 U.S.C. §§ 115 and 116; (3) the petition fee; and (4) a statement of the last known address of the non-signing inventor. Applicant lacks items (2) set forth above.

As to item (1), petitioner asserts "On October 29, 2009, inventor Stuart Knechtle of Renovar, Inc. informed me that he had a phone conversation with Huaizhong Hu during which inventor Hu stated that he would not sign the documents unless Inventor Vasudevan wanted to do so." Petitioner further states, "October 30, 2009, inventor Stuart Knechtle of Renovar, Inc. reported to me that he had a phone conversation with Ganesh Vasudevan, during which Inventor Vasudevan stated that he and Inventor Hu do not want to sign the documents unless they are granted some share of the profit of the invention."

The evidence presented on June 8, 2010, fails to show an affidavit from joint inventor Stuart Knechtle which outlines facts about the phone conversations of October 29, 2009 and October 30, 2009, with nonsigning inventors Hu and Vasudevan. Petitioner should note that where there is an express or oral refusal, that fact, along with the time and place of the refusal, must be stated in an affidavit or declaration by the party to whom the refusal was made. Where there is a written refusal, a copy of the document(s) evidencing that refusal must be made part of the affidavit or declaration.

When it is concluded by the rule 47 applicant that an omitted inventor's conduct constitutes a refusal, all facts upon which that conclusion is based should be stated in an affidavit or declaration. If there is documentary evidence to support facts alleged in the affidavit or declaration, such evidence must be submitted. Whenever an omitted inventor gives a reason for refusing to sign the application oath or declaration, that reason should be stated in the affidavit or declaration.

Additionally, petitioner states "An email was also sent to Ganesh Vasudevan on the January 14, 2010 with the documents for signature attached to the e-mail, also shown in Appendix D...Inventor Vasudevan responded via e-mail dated January 26, 2010, that he does not believe the addition of inventor Knechtle is appropriate." However, the evidence presented fails to show that inventor Vasudevan received/responded to any emails received.

As to item (2) above, the declaration filed on June 8, 2010, lacks compliance with 37 CFR 1.63(a)(2) in that the declaration does not list all the named inventors. Petitioner's attention is directed to MPEP Section 602, which states:

> "Where joint inventors execute separate oaths or declarations, each oath or declaration should make reference to the fact that the affiant is a joint inventor together with each of the other joint inventors indicating them by name. This may be done by stating that he or she does verily believe himself or herself to be the original, first and joint inventor together with 'A' or 'A & B, etc."

Accordingly, a new declaration which lists all the inventors and is signed by all the signing inventor(s) and leaving the signature block of the non-signing inventor blank is required. *See also* MPEP Sections 201.03 and 409.03(a).

Rule 47 applicant is given **TWO (2) MONTHS** from the mailing date of this decision to reply, correcting the below-noted deficiencies. Any reply should be entitled "Request for Reconsideration of Petition Under 37 CFR 1.47(a)," and should only address the deficiencies noted below, except that the reply may include an oath or declaration executed by the non-signing inventor. **FAILURE TO RESPOND WILL RESULT IN ABANDONMENT OF THE APPLICATION.** Any extensions of time will be governed by 37 CFR 1.136(a).

Further correspondence with respect to this matter should be addressed as follows:

By Mail:
Mail Stop PETITION
Commissioner for Patents
Post Office Box 1450
Alexandria, VA 22313-1450

By Hand: U. S. Patent and Trademark Office
Customer Window, Mail Stop PETITIONS
401 Dulany Street
Alexandria, VA 22314

The centralized facsimile number is (571) 273-8300.

Telephone inquiries should be directed to the undersigned at (571) 272-3226.

Andrea Smith
Petitions Examiner
Office of Petitions

UNITED STATES PATENT AND TRADEMARK OFFICE

Commissioner for Patents
United States Patent and Trademark Office
P.O. Box 1450
Alexandria, VA 22313-1450
www.uspto.gov

Casimir Jones, S.C.
2275 Deming Way, Suite 310
Middleton, WI 53562

MAILED

APR 13 2011

OFFICE OF PETITIONS

In re Application of	:	
Ganesh Vasudevan, et. al.	:	DECISION REFUSING STATUS
Application No. 12/611,711	:	UNDER 37 CFR 1.47(a)
Filed: November 3, 2009	:	
Attorney Docket No. RENOVAR-14633/US-4/CON	:	

This is in response to the renewed petition under 37 CFR 1.47(a), filed March 28, 2011.

The petition is **GRANTED**.

Petitioner has shown that the non-signing inventors refuse to join in the filing of the above-identified application.

The application and papers have been reviewed and found in compliance with 37 CFR 1.47(a). This application is hereby accorded Rule 1.47(a) status.

As provided in 37 CFR 1.47(c), this Office will forward notice of this application's filing to the non-signing inventor at the address given in the petition. Notice of the filing of this application will also be published in the Official Gazette.

Telephone inquiries regarding this decision should be directed to the undersigned at (571) 272-3226.

Andrea Smith
Petitions Examiner
Office of Petitions

UNITED STATES PATENT AND TRADEMARK OFFICE

Commissioner for Patents
United States Patent and Trademark Office
P.O. Box 1450
Alexandria, VA 22313-1450
www.uspto.gov

MAILED

APR 13 2011

OFFICE OF PETITIONS

Huaizhong Hu
3749 Cardinal Point Trail
Madison, WI 53593

In re Application of
Ganesh Vasudevan, et. al.
Application No. 12/611,711
Filed: November 3, 2009
For: SYSTEMS AND METHODS FOR CHARACTERIZING LUPUS ERYTHEMATOSUS

Dear Mr. Hu:

You are named as a joint inventor in the above-identified United States patent application, filed under the provisions of 35 U.S.C. 116 (United States Code), and 37 CFR 1.47(a), Rules of Practice in Patent Cases. Should a patent be granted on the application you will be designated therein as a joint inventor.

As a named inventor you are entitled to inspect any paper in the file wrapper of the application, order copies of all or any part thereof (at a prepaid cost per 37 CFR 1.19) or make your position of record in the application. Alternatively, you may arrange to do any of the preceding through a registered patent attorney or agent presenting written authorization from you. If you care to join the application, counsel of record (see below) would presumably assist you. Joining the application would entail the filing of an appropriate oath or declaration by you pursuant to 37 CFR 1.63.

Telephone inquiries regarding this communication should be directed to the undersigned at (571) 272-3226. Requests for information regarding your application should be directed to the File Information Unit at (703) 308-2733. Information regarding how to pay for and order a copy of the application, or a specific paper in the application, should be directed to the Certification Division at (571) 272-3150 or 1 (800) 972-6382 (outside the Washington, DC area).

Andrea Smith
Petitions Examiner
Office of Petitions

cc: Casimir Jones, S.C.
2275 DEMING WAY, SUITE 310
MIDDLETON, WI 53562

UNITED STATES PATENT AND TRADEMARK OFFICE

Commissioner for Patents
United States Patent and Trademark Office
P.O. Box 1450
Alexandria, VA 22313-1450
www.uspto.gov

Ganesh Vasudevan
931 East Johnson Street
Madison, WI 53703

MAILED

APR 13 2011

OFFICE OF PETITIONS

In re Application of
Ganesh Vasudevan, et. al.
Application No. 12/611,711
Filed: November 3, 2009
For: SYSTEMS AND METHODS FOR CHARACTERIZING LUPUS ERYTHEMATOSUS

Dear Mr. Vasudevan:

You are named as a joint inventor in the above-identified United States patent application, filed under the provisions of 35 U.S.C. 116 (United States Code), and 37 CFR 1.47(a), Rules of Practice in Patent Cases. Should a patent be granted on the application you will be designated therein as a joint inventor.

As a named inventor you are entitled to inspect any paper in the file wrapper of the application, order copies of all or any part thereof (at a prepaid cost per 37 CFR 1.19) or make your position of record in the application. Alternatively, you may arrange to do any of the preceding through a registered patent attorney or agent presenting written authorization from you. If you care to join the application, counsel of record (see below) would presumably assist you. Joining the application would entail the filing of an appropriate oath or declaration by you pursuant to 37 CFR 1.63.

Telephone inquiries regarding this communication should be directed to the undersigned at (571) 272-3226. Requests for information regarding your application should be directed to the File Information Unit at (703) 308-2733. Information regarding how to pay for and order a copy of the application, or a specific paper in the application, should be directed to the Certification Division at (571) 272-3150 or 1 (800) 972-6382 (outside the Washington, DC area).

Andrea Smith
Petitions Examiner
Office of Petitions

cc: Casimir Jones, S.C.
2275 DEMING WAY, SUITE 310
MIDDLETON, WI 53562

UNITED STATES PATENT AND TRADEMARK OFFICE

Commissioner for Patents
United States Patent and Trademark Office
P.O. Box 1450
Alexandria, VA 22313-1450
www.uspto.gov

SCHWEGMAN, LUNDBERG & WOESSNER / SYNTHES
P.O. BOX 2938
MINNEAPOLIS MN 55

MAILED

DEC 10 2010

OFFICE OF PETITIONS

In re Application of	:	
Armitage et al.	:	DECISION ON PETITION
Application No. 12/611,716	:	TO WITHDRAW
Filed: November 3, 2009	:	FROM RECORD
Attorney Docket No. 2579.032US3	:	

This is a decision on the Request to Withdraw as Attorney or Agent of Record under 37 C.F.R. § 1.36(b), filed November 23, 2010.

The request is **NOT APPROVED**.

The Office strongly encourages practitioner(s) requesting withdrawal from representation as practitioner of record in an application to review the record to determine whether he or she is, in fact, of record and how he or she was made of record. For example, the practitioner(s) should determine whether he or she was appointed by naming each practitioner individually or through the use of a Customer Number. If the practitioner(s) was appointed by a specific designation, then the Request should ask that each specified practitioner be withdrawn and should list each practitioner(s) in the Request.

In the instant application, the practitioners were appointed via Customer Number. However, the Customer Number provided in the request does not match the Customer Number provided on the previous Power of Attorney.

All future communications from the Office will be directed to above-listed address until otherwise properly notified by the applicant or a proper change of correspondence address have been submitted.

There is an outstanding Office action, mailed June 24, 2010, which requires a reply. Failure to timely and properly do so will result in abandonment of the instant application.

Telephone inquires concerning this decision should be directed to the undersigned at (571) 272-3206. All other inquires concerning either the examination or status of the application should be directed to the Technology Center.

Liana Walsh
Petitions Examiner
Office of Petitions

UNITED STATES PATENT AND TRADEMARK OFFICE

UNITED STATES DEPARTMENT OF COMMERCE
United States Patent and Trademark Office
Address: COMMISSIONER FOR PATENTS
P.O. Box 1450
Alexandria, Virginia 22313-1450
www.uspto.gov

APPLICATION NO.	FILING DATE	FIRST NAMED INVENTOR	ATTORNEY DOCKET NO.	CONFIRMATION NO.
12/611,741	11/03/2009	Thomas Karl Hoffman	1586-035	3066

32905 7590 06/09/2011
JONDLE & ASSOCIATES, P.C.
858 HAPPY CANYON ROAD, SUITE 230
CASTLE ROCK, CO 80108

EXAMINER	
MCELWAIN, ELIZABETH F	

ART UNIT	PAPER NUMBER
1638	

NOTIFICATION DATE	DELIVERY MODE
06/09/2011	ELECTRONIC

Please find below and/or attached an Office communication concerning this application or proceeding.

The time period for reply, if any, is set in the attached communication.

Notice of the Office communication was sent electronically on above-indicated "Notification Date" to the following e-mail address(es):

JondleOA@jondlelaw.com

UNITED STATES PATENT AND TRADEMARK OFFICE

Commissioner for Patents
United States Patent and Trademark Office
P.O. Box 1450
Alexandria, VA 22313-1450
www.uspto.gov

JUN 09 2011

JONDLE & ASSOCIATES P.C.
858 HAPPY CANYON ROAD SUITE 230
CASTLE ROCK CO 80108

In re Application of:
Thomas K. Hoffman
Serial No.: 12/611,741
Filed: November 3, 2009
Attorney Docket No.: **1586-035**

: PETITION DECISION

This is in response to the petition under 37 CFR § 1.59(b), filed May 31, 2011, to expunge information from the above identified application. This application has not been allowed.

Petitioner requests that the Reply to Request for Information under 37 CFR 1.105, and attachment thereto, submitted to the Patent Office on May 31, 2011, be expunged from the record. Petitioner states either: (A) that the information contains trade secret material, proprietary material and/or material that is subject to a protective order which has not been made public; or (B) that the information submitted was unintentionally submitted and the failure to obtain its return would cause irreparable harm to the party who submitted the information or to the party in interest on whose behalf the information was submitted, and the information has not otherwise been made public. The petition fee set forth in 37 CFR § 1.17(g) has been paid.

This is an examined application which is currently under non-final rejection. As such the information provided has been reviewed, in part, but proceedings in the application have not been terminated. As stated in M.P.E.P. 724, upon allowance or other action closing prosecution in an application, petition may be made for return of Proprietary information. The information cannot be expunged at this time.

The petition is **DISMISSED**. Petitioner may resubmit the petition subsequent to a Notice of Allowability or *ex parte Quayle* action being mailed in the application. No additional petition fee will be required at that time.

Should there be any questions about this decision please contact Marianne C. Seidel by letter addressed to Director, TC 1600, at the address listed above, or by telephone at 571-272-0584 or by facsimile sent to the general Office facsimile number, 571-273-8300.

/MC Seidel/
Marianne C. Seidel, Quality Assurance Specialist
Technology Center 1600

UNITED STATES PATENT AND TRADEMARK OFFICE

UNITED STATES DEPARTMENT OF COMMERCE
United States Patent and Trademark Office
Address: COMMISSIONER FOR PATENTS
P.O. Box 1450
Alexandria, Virginia 22313-1450
www.uspto.gov

APPLICATION NO.	FILING DATE	FIRST NAMED INVENTOR	ATTORNEY DOCKET NO.	CONFIRMATION NO.
12/611,741	11/03/2009	Thomas Karl Hoffman	1586-035	3066

32905 7590 10/05/2011
JONDLE & ASSOCIATES, P.C.
858 HAPPY CANYON ROAD, SUITE 230
CASTLE ROCK, CO 80108

EXAMINER	
MCELWAIN, ELIZABETH F	

ART UNIT	PAPER NUMBER
1638	

NOTIFICATION DATE	DELIVERY MODE
10/05/2011	ELECTRONIC

Please find below and/or attached an Office communication concerning this application or proceeding.

The time period for reply, if any, is set in the attached communication.

Notice of the Office communication was sent electronically on above-indicated "Notification Date" to the following e-mail address(es):

JondleOA@jondlelaw.com

UNITED STATES PATENT AND TRADEMARK OFFICE

Commissioner for Patents
United States Patent and Trademark Office
P.O. Box 1450
Alexandria, VA 22313-1450
www.uspto.gov

OCT 0 5 2011

JONDLE & ASSOCIATES P.C.
858 HAPPY CANYON ROAD SUITE 230
CASTLE ROCK CO 80108

In re Application of:
Thomas K. Hoffman
Serial No.: 12/611,741
Filed: November 3, 2009
Attorney Docket No.: **1586-035**

: PETITION DECISION

This is in response to the renewed petition under 37 CFR § 1.59(b), filed October 4, 2011, to expunge information from the above identified application. This application has been allowed.

Petitioner requests that the material submitted to the Patent Office on May 31, 2011 be expunged from the record. Petitioner states either: (A) that the information contains trade secret material, proprietary material and/or material that is subject to a protective order which has not been made public; or (B) that the information submitted was unintentionally submitted and the failure to obtain its return would cause irreparable harm to the party who submitted the information or to the party in interest on whose behalf the information was submitted, and the information has not otherwise been made public. The petition fee set forth in 37 CFR § 1.17(g) has been paid.

The reasons set forth in this petition establishes to the satisfaction of the Director that expungement of the information is appropriate. The file entry for this document has been closed and as such the document is no longer publicly available, which is the IFW equivalent to removal of a paper document from a paper file wrapper.

Therefore, petitioner's petition is GRANTED.

Should there be any questions about this decision please contact Marianne C. Seidel by letter addressed to Director, TC 1600, at the address listed above, or by telephone at 571-272-0584 or by facsimile sent to the general Office facsimile number, 571-273-8300.

/MC Seidel/
Marianne C. Seidel, Quality Assurance Specialist
Technology Center 1600

UNITED STATES PATENT AND TRADEMARK OFFICE

Commissioner for Patents
United States Patent and Trademark Office
P.O. Box 1450
Alexandria, VA 22313-1450
www.uspto.gov

MAILED
JUL 29 2011
OFFICE OF PETITIONS

TIPS/MAXIM
C/O INTELLEVATE LLC
P.O. BOX 52050
MINNEAPOLIS MN 55402

In re Application of
Kenneth Helfrich
Application No. 12/611,745
Filed: November 3, 2009
Attorney Docket No.
MAX1P009.US01/MAXM0581

DECISION ON PETITION
UNDER 37 CFR 1.137(b)

This is a decision on the petition, filed May 27, 2011, which is being treated as a petition under 37 CFR 1.137(b) to revive the instant nonprovisional application for failure to timely notify the U.S. Patent and Trademark (USPTO) of the filing of an application in a foreign country, or under a multinational treaty that requires publication of applications eighteen months after filing. *See* 37 CFR 1.137(f).

The petition is **GRANTED**.

Petitioner states that the instant nonprovisional application is the subject of an application filed in an eighteen-month publication country on November 2, 2010. However, the USPTO was unintentionally not notified of this filing within 45 days subsequent to the filing of the subject application in an eighteen-month publication country.

In view of the above, this application became abandoned pursuant to 35 U.S.C. § 122(b)(2)(B)(iii) and 37 CFR 1.213(c) for failure to timely notify the Office of the filing of an application in a foreign country or under a multilateral international agreement that requires publication of applications 18 months after filing.

A petition to revive an application abandoned pursuant to 35 U.S.C. 122(b)(2)(B)(iii) for failure to notify the USPTO of a foreign filing must be accompanied by:

(1) the required reply which is met by the notification of such filing in a foreign country or under a multinational treaty;
(2) the petition fee as set forth in 37 CFR 1.17(m); and
(3) a statement that the entire delay in filing the required reply from the due date of the reply until the filing of a grantable petition was unintentional.

The instant petition has been found to be in compliance with 37 CFR 1.137(b). Accordingly, the failure to timely notify the USPTO of a foreign or international filing within 45 days after the date of filing of such foreign or international application as provided by 35 U.S.C. § 122(b)(2)(B)(iii) and 37 CFR 1.213(c) is accepted as having been unintentionally delayed.

The previous Request and Certification under 35 U.S.C. § 122(b)(2)(B)(i) has been rescinded. A Notice Regarding Rescission of Nonpublication Request which sets forth the projected publication date of November 10, 2011 accompanies this decision on petition.

Telephone inquiries concerning this decision should be directed to the undersigned at (571) 272-3208.

This application is being referred to Technology Center Art Unit 2858 for examination in due course.

/KOC/
Karen Creasy
Petitions Examiner
Office of Petitions

ATTACHMENT: Notice Regarding Rescission of Nonpublication Request

UNITED STATES PATENT AND TRADEMARK OFFICE

UNITED STATES DEPARTMENT OF COMMERCE
United States Patent and Trademark Office
Address: COMMISSIONER FOR PATENTS
P.O. Box 1450
Alexandria, Virginia 22313-1450
www.uspto.gov

APPLICATION NUMBER	FILING OR 371(C) DATE	FIRST NAMED APPLICANT	ATTY. DOCKET NO./TITLE
12/611,745	11/03/2009	Kenneth Helfrich	MAX1P009.US01/ MAXM0581

CONFIRMATION NO. 3078

79159
TIPS/MAXIM
c/o Intellevate LLC
P.O. Box 52050
Minneapolis, MN 55402

NONPUBLICATION RESCISSION LETTER

Date Mailed: 07/29/2011

Communication Regarding Rescission Of Nonpublication Request and/or Notice of Foreign Filing

Applicant's rescission of the previously-filed nonpublication request and/or notice of foreign filing is acknowledged. The paper has been reflected in the Patent and Trademark Office's (USPTO's) computer records so that the earliest possible projected publication date can be assigned.

The projected publication date is 11/10/2011.

If applicant rescinded the nonpublication request before or on the date of "foreign filing,"[1] then no notice of foreign filing is required.

If applicant foreign filed the application after filing the above application and before filing the rescission, and the rescission did not also include a notice of foreign filing, then a notice of foreign filing (not merely a rescission) is required to be filed within 45 days of the date of foreign filing. See 35 U.S.C. § 122(b)(2)(B)(iii), and Clarification of the United States Patent and Trademark Office's Interpretation of the Provisions of 35 U.S.C. § 122(b)(2)(B)(ii)-(iv), 1272 Off. Gaz. Pat. Office 22 (July 1, 2003).

If a notice of foreign filing is required and is not filed within 45 days of the date of foreign filing, then the application becomes abandoned pursuant to 35 U.S.C. § 122(b)(2)(B)(iii). In this situation, applicant should either file a petition to revive or notify the Office that the application is abandoned. See 37 CFR 1.137(f). Any such petition to revive will be forwarded to the Office of Petitions for a decision. Note that the filing of the petition will not operate to stay any period of reply that may be running against the application.

Questions regarding petitions to revive should be directed to the Office of Petitions at (571) 272-3282.

[1] Note, for purpose of this notice, that "foreign filing" means "filing an application directed to the same invention in another country, or under a multilateral international agreement, that requires publication of applications 18 months after filing".

/kocreasy/

Office of Data Management, Application Assistance Unit (571) 272-4000, or (571) 272-4200, or 1-888-786-0101

UNITED STATES PATENT AND TRADEMARK OFFICE

COMMISSIONER FOR PATENTS
UNITED STATES PATENT AND TRADEMARK OFFICE
P.O. BOX 1450
ALEXANDRIA, VA 22313-1450
www.uspto.gov

MR. ROBERT A. LUFF
P.O. Box 92
22707 Marshall Lane
Whittman, MD 21676

MAILED
SEP 13 2010
OFFICE OF PETITIONS

In re Application of :
Arun Ramaswamy, Fred Martensen :
Robert Luff and Kendall Shirilla :
Application No. 12/611,757 : LETTER
Filed: November 3, 2009 :
Attorney Docket No. 20004/445US :

Dear Mr. Luff:

You are named as a joint inventor in the above-identified United States patent application filed under the provisions of 35 U.S.C. 116 (United States Code) and 37 CFR 1.47(a), Rules of Practice in Patent Cases. Should a patent be granted on the application you will be designated therein as a joint inventor.

As a named inventor you are entitled to inspect any paper in the file wrapper of the application, order copies of all or any part thereof (at a prepaid cost per 37 CFR 1.19) or make your position of record in the application. Alternatively, you may arrange to do any of the preceding through a registered patent attorney or agent presenting written authorization from you. If you care to join the application, counsel of record (see below) would presumably assist you. Joining in the application would entail the filing of an appropriate oath or declaration by you pursuant to 37 CFR 1.63. However, no action on your part is required for this patent to issue with you as a named inventor.

Telephone inquiries regarding this communication should be directed to Petitions Attorney Nancy Johnson at (571) 272-3219. Requests for information regarding your application should be directed to the File Information Unit at (703) 308-2733.

Information regarding how to pay for and order a copy of the application, or a specific paper in the application, should be directed to the Certification Division at (571) 272-3150 or 1-800-972-6382 (outside the Washington D.C. area).

Nancy Johnson
Senior Petitions Attorney
Office of Petitions

Hanley, Flight &
Zimmerman, LLC
150 S. Wacker Dr. Suite 2100
Chicago IL 60606

UNITED STATES PATENT AND TRADEMARK OFFICE

COMMISSIONER FOR PATENTS
UNITED STATES PATENT AND TRADEMARK OFFICE
P.O. BOX 1450
ALEXANDRIA, VA 22313-1450
www.uspto.gov

Paper No.

Hanley, Flight &
Zimmerman, LLC
150 S. Wacker Dr. Suite 2100
Chicago IL 60606

MAILED

SEP 14 2010

OFFICE OF PETITIONS

In re Application of :
Arun Ramaswamy, Fred Martensen :
Robert Luff and Kendall Shirilla : DECISION ACCORDING STATUS
Application No. 12/611,757 : UNDER 37 C.F.R. § 1.47(a)
Filed: November 3, 2009 :
Attorney Docket No. 20004/445US :

This is a decision on the PETITION UNDER 37 CFR 1.47(a) TO PROCEED WITHOUT SIGNATURE OF ROBERT A. LUFF filed February 9, 2010.

The petition is **GRANTED**.

The above-identified application was filed on November 3, 2009, without an executed oath or declaration. On November 19, 2009, the Office mailed a "Notice to File Missing Parts of Application," requiring the missing declaration and the surcharge for its late filing. This Notice set a two-month time limit for reply with extensions of time obtainable under § 1.136(a).

In response, applicants filed the missing declaration, late surcharge and the instant petition. To make this response timely, applicants submitted an extension of time within the first month. The petition includes a declaration executed by inventors Ramaswamy, Martensen and Shirilla on behalf of themselves and on behalf of non-signing inventor Luff. Applicants assert that status under 1.47(a) is proper because joint inventor Luff refuses to join in the application. By statement of facts of patent attorney James Flight, with supporting documentary evidence, applicants have shown that by his conduct, in not responding to the application papers

presented by mail sent on December 2, 2009, inventor Luff has refused to join in the application. (Given the absence of an acknowledgment from inventor Luff, it cannot be inferred that the papers sent by email were received and readable).

The declaration filed February 9, 2010, has been reviewed and found in compliance with § 1.63. The petition includes payment of the petition fee of $200 and a statement of the last known address of inventor Luff.

In view thereof, this application is hereby accorded Rule 1.47(a) status.

As provided in new Rule 1.47(c), this Office will forward notice of this application's filing to the non-signing inventor at the address given in the petition. Notice of the filing of this application will also be published in the Official Gazette.

Telephone inquiries related to this decision should be directed to the undersigned at (571) 272-3219.

Nancy Johnson
Senior Petitions Attorney
Office of Petitions

UNITED STATES PATENT AND TRADEMARK OFFICE

UNITED STATES DEPARTMENT OF COMMERCE
United States Patent and Trademark Office
Address: COMMISSIONER FOR PATENTS
P.O. Box 1450
Alexandria, Virginia 22313-1450
www.uspto.gov

APPLICATION NO.	FILING DATE	FIRST NAMED INVENTOR	ATTORNEY DOCKET NO.	CONFIRMATION NO.
12/611,759	11/03/2009	Thomas Karl Hoffman	1586-026	3097

32905 7590 12/06/2011

JONDLE & ASSOCIATES, P.C.
858 HAPPY CANYON ROAD, SUITE 230
CASTLE ROCK, CO 80108

EXAMINER	
O HARA, EILEEN B	

ART UNIT	PAPER NUMBER
1638	

NOTIFICATION DATE	DELIVERY MODE
12/06/2011	ELECTRONIC

Please find below and/or attached an Office communication concerning this application or proceeding.

The time period for reply, if any, is set in the attached communication.

Notice of the Office communication was sent electronically on above-indicated "Notification Date" to the following e-mail address(es):

JondleOA@jondlelaw.com

UNITED STATES PATENT AND TRADEMARK OFFICE

Commissioner for Patents
United States Patent and Trademark Office
P.O. Box 1450
Alexandria, VA 22313-1450
www.uspto.gov

DEC - 6 2011

JONDLE & ASSOCIATES P.C.
858 HAPPY CANYON ROAD SUITE 230
CASTLE ROCK CO 80108

In re Application of:
Thomas K. Hoffman
Serial No.: 12/611,759
Filed: November 3, 2009
Attorney Docket No.: **1586-026**

: PETITION DECISION

This is in response to the petition under 37 CFR § 1.59(b), filed November 22, 2011, to expunge information from the above identified application. This application has not been allowed.

Petitioner requests that the Reply to Request for Information under 37 CFR 1.105, and attachment thereto, submitted to the Patent Office on November 22, 2011, be expunged from the record. Petitioner states either: (A) that the information contains trade secret material, proprietary material and/or material that is subject to a protective order which has not been made public; or (B) that the information submitted was unintentionally submitted and the failure to obtain its return would cause irreparable harm to the party who submitted the information or to the party in interest on whose behalf the information was submitted, and the information has not otherwise been made public. The petition fee set forth in 37 CFR § 1.17(g) has been paid.

This is an examined application which is currently under non-final rejection. As such the information provided has been reviewed, in part, but proceedings in the application have not been terminated. As stated in M.P.E.P. 724, upon allowance or other action closing prosecution in an application, petition may be made for return of Proprietary information. The information cannot be expunged at this time.

The petition is **DISMISSED**. Petitioner may resubmit the petition subsequent to a Notice of Allowability or *ex parte Quayle* action being mailed in the application. No additional petition fee will be required at that time.

Should there be any questions about this decision please contact Marianne C. Seidel by letter addressed to Director, TC 1600, at the address listed above, or by telephone at 571-272-0584 or by facsimile sent to the general Office facsimile number, 571-273-8300.

/MC Seidel/
Marianne C. Seidel, Quality Assurance Specialist
Technology Center 1600

UNITED STATES PATENT AND TRADEMARK OFFICE

Commissioner for Patents
United States Patent and Trademark Office
P.O. Box 1450
Alexandria, VA 22313-1450
www.uspto.gov

Decision Date : December 9, 2011

In re Application of :

Thomas Hoffman

Application No : 12611759

Filed : 03-Nov-2009

Attorney Docket No : 1586-026

DECISION ON REQUEST TO WITHDRAW AS ATTORNEY/AGENTOF RECORD

This is an electronic decision on the Request to Withdraw as attorney or agent of record under 37 CFR§ 1.36(b), filed December 9, 2011

The request is **APPROVED**

The request was signed by Robert J. Jondle (registration no. 33915) on behalf of all attorneys/agents associated with Customer Number 32905 . All attorneys/agents associated with Customer Number 32905 have been withdrawn.

Since there are no remaining attorneys of record, all future communications from the Office will be directed to the first named inventor or assignee that has properly made itself of record pursuant to 37 CFR 3.71, with Customer number 26263 .

As a reminder, requester is required to inform the first named inventor or assignee that has properly made itself of record pursuant to 37 CFR 3.71 of the electronically processed petition.

Telephone inquiries concerning this decision should be directed to the Patent Electronic Business Center (EBC) at 866-217-9197.

Office of Petitions

Doc Code: PET.AUTO **Document Description: Petition automatically granted by EFS-Web**	PTO/SB/83 U.S. Patent and Trademark Office Department of Commerce

Electronic Petition Request	**REQUEST FOR WITHDRAWAL AS ATTORNEY OR AGENT AND CHANGE OF CORRESPONDENCE ADDRESS**
Application Number	12611759
Filing Date	03-Nov-2009
First Named Inventor	Thomas Hoffman
Art Unit	1638
Examiner Name	EILEEN O HARA
Attorney Docket Number	1586-026
Title	Soybean Cultivar S080191

◉ Please withdraw me as attorney or agent for the above identified patent application and the practitioners of record associated with Customer Number: 32905

The reason(s) for this request are those described in 37 CFR:

10.40(b)(4)

Certifications

☒ I/We have given reasonable notice to the client, prior to the expiration of the response period, that the practitioner(s) intend to withdraw from employment

☒ I/We have delivered to the client or a duly authorized representative of the client all papers and property (including funds) to which the client is entitled

☒ I/We have notified the client of any responses that may be due and the time frame within which the client must respond

Change the correspondence address and direct all future correspondence to:
The address of the first named inventor or assignee that has properly made itself of record pursuant to 37 CFR 3.71, associated with Customer Number: 26263

I am authorized to sign on behalf of myself and all withdrawing practitioners.

Signature	/Robert J. Jondle/
Name	Robert J. Jondle
Registration Number	33915

UNITED STATES PATENT AND TRADEMARK OFFICE

UNITED STATES DEPARTMENT OF COMMERCE
United States Patent and Trademark Office
Address: COMMISSIONER FOR PATENTS
P.O. Box 1450
Alexandria, Virginia 22313-1450
www.uspto.gov

APPLICATION NO.	FILING DATE	FIRST NAMED INVENTOR	ATTORNEY DOCKET NO.	CONFIRMATION NO.
12/611,777	11/03/2009	Thomas Karl Hoffman	1586-027	3129

32905 7590 01/20/2012

JONDLE & ASSOCIATES, P.C.
858 HAPPY CANYON ROAD, SUITE 230
CASTLE ROCK, CO 80108

EXAMINER	
O HARA, EILEEN B	

ART UNIT	PAPER NUMBER
1638	

NOTIFICATION DATE	DELIVERY MODE
01/20/2012	ELECTRONIC

Please find below and/or attached an Office communication concerning this application or proceeding.

The time period for reply, if any, is set in the attached communication.

Notice of the Office communication was sent electronically on above-indicated "Notification Date" to the following e-mail address(es):

JondleOA@jondlelaw.com

UNITED STATES PATENT AND TRADEMARK OFFICE

Commissioner for Patents
United States Patent and Trademark Office
P.O. Box 1450
Alexandria, VA 22313-1450
www.uspto.gov

JAN 2 0 2012

JONDLE & ASSOCIATES P.C.
858 HAPPY CANYON ROAD SUITE 230
CASTLE ROCK CO 80108

In re Application of:
Thomas Karl Hoffman
Serial No.: 12/611,777
Filed: November 3, 2009
Attorney Docket No.: **1586-027**

: PETITION DECISION

This is in response to the petition under 37 CFR § 1.59(b), filed January 11, 2012, to expunge information from the above identified application. This application has not been allowed.

Petitioner requests that the Reply to Request for Information under 37 CFR 1.105, and attachment thereto, submitted to the Patent Office on January 11, 2012, be expunged from the record. Petitioner states either: (A) that the information contains trade secret material, proprietary material and/or material that is subject to a protective order which has not been made public; or (B) that the information submitted was unintentionally submitted and the failure to obtain its return would cause irreparable harm to the party who submitted the information or to the party in interest on whose behalf the information was submitted, and the information has not otherwise been made public. The petition fee set forth in 37 CFR § 1.17(g) has been paid.

This is an examined application which is currently under non-final rejection. As such the information provided has been reviewed, in part, but proceedings in the application have not been terminated. As stated in M.P.E.P. 724, upon allowance or other action closing prosecution in an application, petition may be made for return of Proprietary information. The information cannot be expunged at this time.

The petition is **DISMISSED**. Petitioner may resubmit the petition subsequent to a Notice of Allowability or *ex parte Quayle* action being mailed in the application. No additional petition fee will be required at that time.

Should there be any questions about this decision please contact Marianne C. Seidel by letter addressed to Director, TC 1600, at the address listed above, or by telephone at 571-272-0584 or by facsimile sent to the general Office facsimile number, 571-273-8300.

/MC Seidel/
Marianne C. Seidel, Quality Assurance Specialist
Technology Center 1600

Doc Code: PET.AUTO **Document Description: Petition automatically granted by EFS-Web**	PTO/SB/83 U.S. Patent and Trademark Office Department of Commerce

Electronic Petition Request	**REQUEST FOR WITHDRAWAL AS ATTORNEY OR AGENT AND CHANGE OF CORRESPONDENCE ADDRESS**
Application Number	12611777
Filing Date	03-Nov-2009
First Named Inventor	Thomas Hoffman
Art Unit	1638
Examiner Name	EILEEN O HARA
Attorney Docket Number	1586-027
Title	Soybean Cultivar S080190

◉ Please withdraw me as attorney or agent for the above identified patent application and the practitioners of record associated with Customer Number: 32905

The reason(s) for this request are those described in 37 CFR:

10.40(b)(4)

Certifications

☒ I/We have given reasonable notice to the client, prior to the expiration of the response period, that the practitioner(s) intend to withdraw from employment

☒ I/We have delivered to the client or a duly authorized representative of the client all papers and property (including funds) to which the client is entitled

☒ I/We have notified the client of any responses that may be due and the time frame within which the client must respond

Change the correspondence address and direct all future correspondence to:
The address of the first named inventor or assignee that has properly made itself of record pursuant to 37 CFR 3.71, associated with Customer Number: 26263

I am authorized to sign on behalf of myself and all withdrawing practitioners.

Signature	/Robert J. Jondle/
Name	Robert J. Jondle
Registration Number	33915

UNITED STATES PATENT AND TRADEMARK OFFICE

Commissioner for Patents
United States Patent and Trademark Office
P.O. Box 1450
Alexandria, VA 22313-1450
www.uspto.gov

Decision Date : January 26, 2012

In re Application of :

Thomas Hoffman

Application No : 12611777

Filed : 03-Nov-2009

Attorney Docket No : 1586-027

DECISION ON REQUEST TO WITHDRAW AS ATTORNEY/AGENTOF RECORD

This is an electronic decision on the Request to Withdraw as attorney or agent of record under 37 CFR§ 1.36(b), filed January 26, 2012

The request is **APPROVED**

The request was signed by Robert J. Jondle (registration no. 33915) on behalf of all attorneys/agents associated with Customer Number 32905 . All attorneys/agents associated with Customer Number 32905 have been withdrawn.

Since there are no remaining attorneys of record, all future communications from the Office will be directed to the first named inventor or assignee that has properly made itself of record pursuant to 37 CFR 3.71, with Customer number 26263 .

As a reminder, requester is required to inform the first named inventor or assignee that has properly made itself of record pursuant to 37 CFR 3.71 of the electronically processed petition.

Telephone inquiries concerning this decision should be directed to the Patent Electronic Business Center (EBC) at 866-217-9197.

Office of Petitions

UNITED STATES PATENT AND TRADEMARK OFFICE

Commissioner for Patents
United States Patent and Trademark Office
P.O. Box 1450
Alexandria, VA 22313-1450
www.uspto.gov

Patent No. : 8,053,335 B2
Ser. No. : 12/611,791
Inventor(s) : Yonehara
Issued : Nov. 8, 2011
Title : FORMING METHOD OF GALLIUM NITRIDE SYSTEM COMPOUND SEMICONDUCTOR LAYER, TRANSFER METHOD OF THE SAME, AND SUBSTRATE STRUCTURE WITH THE SAME BONDED THERETO
Docket No. : 10066349US01
Re: Request for Certificate of Correction

Consideration has been given your request for the issuance of a certificate of correction for the above-identified patent under the provisions of Rule(s) 1.322 and/or 1.323.

Assignees' names and addresses (assignment data) printed in a patent, are based *solely* on information supplied in the appropriate space for identifying the assignment data, i.e., item 3 of the Issue Fee Transmittal Form PTOL-85B. Granting of a request under 37 CFR 3.81(b) is required to correct applicant's error providing ***incorrect or erroneous*** assignment data, *before* issuance of a Certificate of Correction, under 37 CFR 1.323 *(see Manual of Patent Examining Procedures (M.P.E.P) Chp.1400, sect. 1481).* This procedure is required *at any time after the issue fee is paid*, including after issuance of the patent.

In view of the foregoing, your request, in this matter, is hereby denied.

A request to correct the Assignee under 37 CFR 3.81(b) should include:

A. **the processing fee set forth in 37 CFR 1. 17(i) (currently $130);**
B. a statement that the failure to include the correct assignee name on the PTOL-85B was inadvertent; and
C. a copy of the Notice of Recordation of Assignment Document, reflecting the reel and frame number where the assignment(s) is recorded and/or reflecting proof of *the date* the assignment was submitted for recordation.

In the Request, Applicant(s) may request that the file be forwarded to Certificates of Correction Branch, for issuance of a Certificate of Correction, if the Request is granted.

Any request under 37 CFR 3.81(b) should be directed to the following address or facsimile number:

By mail:
Mail Stop PETITIONS
Commissioner for Patents
Post Office Box 1450
Alexandria, VA 22313-1450

By hand: Customer Service Window
Mail Stop Petitions
Randolph Building
401 Dulany Street
Alexandria, VA 22314

By fax: (703) 872-9306
ATTN: Office of Petitions

If a fee (currently $100) was previously submitted for consideration of a Request for Certificate of Correction, under CFR 1.323, to correct assignment data, no additional fee is required.

Ennis Young
For Mary Diggs
Decisions & Certificates
of Correction Branch
(571) **272-3435** or (703) 756-1814

UNITED STATES PATENT AND TRADEMARK OFFICE

UNITED STATES DEPARTMENT OF COMMERCE
United States Patent and Trademark Office
Address: COMMISSIONER FOR PATENTS
P.O. Box 1450
Alexandria, Virginia 22313-1450
www.uspto.gov

APPLICATION NO.	FILING DATE	FIRST NAMED INVENTOR	ATTORNEY DOCKET NO.	CONFIRMATION NO.
12/611,792	11/03/2009	Thomas Karl Hoffman	1586-028	3153

32905 7590 12/28/2011

JONDLE & ASSOCIATES, P.C.
858 HAPPY CANYON ROAD, SUITE 230
CASTLE ROCK, CO 80108

EXAMINER	
O HARA, EILEEN B	
ART UNIT	PAPER NUMBER
1638	

NOTIFICATION DATE	DELIVERY MODE
12/28/2011	ELECTRONIC

Please find below and/or attached an Office communication concerning this application or proceeding.

The time period for reply, if any, is set in the attached communication.

Notice of the Office communication was sent electronically on above-indicated "Notification Date" to the following e-mail address(es):

JondleOA@jondlelaw.com

UNITED STATES PATENT AND TRADEMARK OFFICE

Commissioner for Patents
United States Patent and Trademark Office
P.O. Box 1450
Alexandria, VA 22313-1450
www.uspto.gov

DEC 2 8 2011

JONDLE & ASSOCIATES P.C.
858 HAPPY CANYON ROAD SUITE 230
CASTLE ROCK CO 80108

In re Application of:	:
Thomas K. Hoffman	:
Serial No.: 12/611,792	: PETITION DECISION
Filed: November 3, 2009	:
Attorney Docket No.: **1586-028**	

This is in response to the petition under 37 CFR § 1.59(b), filed December 9, 2011, to expunge information from the above identified application. This application has not been allowed.

Petitioner requests that the Reply to Request for Information under 37 CFR 1.105, and attachment thereto, submitted to the Patent Office on December 9, 2011, be expunged from the record. Petitioner states either: (A) that the information contains trade secret material, proprietary material and/or material that is subject to a protective order which has not been made public; or (B) that the information submitted was unintentionally submitted and the failure to obtain its return would cause irreparable harm to the party who submitted the information or to the party in interest on whose behalf the information was submitted, and the information has not otherwise been made public. The petition fee set forth in 37 CFR § 1.17(g) has been paid.

This is an examined application which is currently under non-final rejection. As such the information provided has been reviewed, in part, but proceedings in the application have not been terminated. As stated in M.P.E.P. 724, upon allowance or other action closing prosecution in an application, petition may be made for return of Proprietary information. The information cannot be expunged at this time.

The petition is **DISMISSED**. Petitioner may resubmit the petition subsequent to a Notice of Allowability or *ex parte Quayle* action being mailed in the application. No additional petition fee will be required at that time.

Should there be any questions about this decision please contact Marianne C. Seidel by letter addressed to Director, TC 1600, at the address listed above, or by telephone at 571-272-0584 or by facsimile sent to the general Office facsimile number, 571-273-8300.

/MC Seidel/
Marianne C. Seidel, Quality Assurance Specialist
Technology Center 1600

Doc Code: PET.AUTO **Document Description: Petition automatically granted by EFS-Web**	PTO/SB/83 U.S. Patent and Trademark Office Department of Commerce

Electronic Petition Request	**REQUEST FOR WITHDRAWAL AS ATTORNEY OR AGENT AND CHANGE OF CORRESPONDENCE ADDRESS**
Application Number	12611792
Filing Date	03-Nov-2009
First Named Inventor	Thomas Hoffman
Art Unit	1638
Examiner Name	EILEEN O HARA
Attorney Docket Number	1586-028
Title	Soybean Cultivar S080193

◉ Please withdraw me as attorney or agent for the above identified patent application and the practitioners of record associated with Customer Number: 32905

The reason(s) for this request are those described in 37 CFR:

10.40(b)(4)

Certifications

☒ I/We have given reasonable notice to the client, prior to the expiration of the response period, that the practitioner(s) intend to withdraw from employment

☒ I/We have delivered to the client or a duly authorized representative of the client all papers and property (including funds) to which the client is entitled

☒ I/We have notified the client of any responses that may be due and the time frame within which the client must respond

Change the correspondence address and direct all future correspondence to:
The address of the first named inventor or assignee that has properly made itself of record pursuant to 37 CFR 3.71, associated with Customer Number: 26263

I am authorized to sign on behalf of myself and all withdrawing practitioners.

Signature	/Robert J. Jondle/
Name	Robert J. Jondle
Registration Number	33915

UNITED STATES PATENT AND TRADEMARK OFFICE

Commissioner for Patents
United States Patent and Trademark Office
P.O. Box 1450
Alexandria, VA 22313-1450
www.uspto.gov

Decision Date : January 11, 2012

In re Application of :

Thomas Hoffman

Application No : 12611792

Filed : 03-Nov-2009

Attorney Docket No : 1586-028

DECISION ON REQUEST TO WITHDRAW AS ATTORNEY/AGENTOF RECORD

This is an electronic decision on the Request to Withdraw as attorney or agent of record under 37 CFR§ 1.36(b), filed January 11, 2012

The request is **APPROVED**

The request was signed by Robert J. Jondle (registration no. 33915) on behalf of all attorneys/agents associated with Customer Number 32905 . All attorneys/agents associated with Customer Number 32905 have been withdrawn.

Since there are no remaining attorneys of record, all future communications from the Office will be directed to the first named inventor or assignee that has properly made itself of record pursuant to 37 CFR 3.71, with Customer number 26263 .

As a reminder, requester is required to inform the first named inventor or assignee that has properly made itself of record pursuant to 37 CFR 3.71 of the electronically processed petition.

Telephone inquiries concerning this decision should be directed to the Patent Electronic Business Center (EBC) at 866-217-9197.

Office of Petitions

UNITED STATES PATENT AND TRADEMARK OFFICE

Commissioner for Patents
United States Patent and Trademark Office
P.O. Box 1450
Alexandria, VA 22313-1450
www.uspto.gov

Decision Date : February 21, 2012

In re Application of :

Thomas Hoffman

Application No : 12611805

Filed : 03-Nov-2009

Attorney Docket No : 1586-046

DECISION ON REQUEST TO WITHDRAW AS ATTORNEY/AGENTOF RECORD

This is an electronic decision on the Request to Withdraw as attorney or agent of record under 37 CFR§ 1.36(b), filed February 21, 2012

The request is **APPROVED**

The request was signed by Robert J. Jondle (registration no. 33915) on behalf of all attorneys/agents associated with Customer Number 32905 . All attorneys/agents associated with Customer Number 32905 have been withdrawn.

Since there are no remaining attorneys of record, all future communications from the Office will be directed to the first named inventor or assignee that has properly made itself of record pursuant to 37 CFR 3.71, with Customer number 26263 .

As a reminder, requester is required to inform the first named inventor or assignee that has properly made itself of record pursuant to 37 CFR 3.71 of the electronically processed petition.

Telephone inquiries concerning this decision should be directed to the Patent Electronic Business Center (EBC) at 866-217-9197.

Office of Petitions

Doc Code: PET.AUTO **Document Description: Petition automatically granted by EFS-Web**	PTO/SB/83 U.S. Patent and Trademark Office Department of Commerce

Electronic Petition Request	**REQUEST FOR WITHDRAWAL AS ATTORNEY OR AGENT AND CHANGE OF CORRESPONDENCE ADDRESS**
Application Number	12611805
Filing Date	03-Nov-2009
First Named Inventor	Thomas Hoffman
Art Unit	1638
Examiner Name	ANNE KUBELIK
Attorney Docket Number	1586-046
Title	Soybean Cultivar S080119

◉ Please withdraw me as attorney or agent for the above identified patent application and the practitioners of record associated with Customer Number: 32905

The reason(s) for this request are those described in 37 CFR:

10.40(b)(4)

Certifications

☒ I/We have given reasonable notice to the client, prior to the expiration of the response period, that the practitioner(s) intend to withdraw from employment

☒ I/We have delivered to the client or a duly authorized representative of the client all papers and property (including funds) to which the client is entitled

☒ I/We have notified the client of any responses that may be due and the time frame within which the client must respond

Change the correspondence address and direct all future correspondence to:
The address of the first named inventor or assignee that has properly made itself of record pursuant to 37 CFR 3.71, associated with Customer Number: 26263

I am authorized to sign on behalf of myself and all withdrawing practitioners.

Signature	/Robert J. Jondle/
Name	Robert J. Jondle
Registration Number	33915

UNITED STATES PATENT AND TRADEMARK OFFICE

UNITED STATES DEPARTMENT OF COMMERCE
United States Patent and Trademark Office
Address: COMMISSIONER FOR PATENTS
P.O. Box 1450
Alexandria, Virginia 22313-1450
www.uspto.gov

APPLICATION NO.	FILING DATE	FIRST NAMED INVENTOR	ATTORNEY DOCKET NO.	CONFIRMATION NO.
12/611,805	11/03/2009	Thomas Karl Hoffman	1586-046	3181

26263 7590 03/06/2012

SNR DENTON US LLP
P.O. BOX 061080
CHICAGO, IL 60606-1080

EXAMINER	
KUBELIK, ANNE R	
ART UNIT	**PAPER NUMBER**
1638	
MAIL DATE	**DELIVERY MODE**
03/06/2012	PAPER

Please find below and/or attached an Office communication concerning this application or proceeding.

The time period for reply, if any, is set in the attached communication.

UNITED STATES PATENT AND TRADEMARK OFFICE

Commissioner for Patents
United States Patent and Trademark Office
P.O. Box 1450
Alexandria, VA 22313-1450
www.uspto.gov

SNR DENTON US LLP
P.O. BOX 061080
CHICAGO IL 60606-1080

MAR 0 6 2012

In re Application of:
Thomas K. Hoffman
Serial No.: 12/611,805
Filed: November 3, 2009
Attorney Docket No.: **1586-046**

: PETITION DECISION

This is in response to the petition under 37 CFR § 1.59(b), filed February 21, 2012, to expunge information from the above identified application. This application has not been allowed.

Petitioner requests that the Reply to Request for Information under 37 CFR 1.105, and attachment thereto, submitted to the Patent Office on February 21, 2012, be expunged from the record. Petitioner states either: (A) that the information contains trade secret material, proprietary material and/or material that is subject to a protective order which has not been made public; or (B) that the information submitted was unintentionally submitted and the failure to obtain its return would cause irreparable harm to the party who submitted the information or to the party in interest on whose behalf the information was submitted, and the information has not otherwise been made public. The petition fee set forth in 37 CFR § 1.17(g) has been paid.

This is an examined application which is currently under non-final rejection. As such the information provided has been reviewed, in part, but proceedings in the application have not been terminated. As stated in M.P.E.P. 724, upon allowance or other action closing prosecution in an application, petition may be made for return of Proprietary information. The information cannot be expunged at this time.

The petition is **DISMISSED**. Petitioner may resubmit the petition subsequent to a Notice of Allowability or *ex parte Quayle* action being mailed in the application. No additional petition fee will be required at that time.

Should there be any questions about this decision please contact Marianne C. Seidel by letter addressed to Director, TC 1600, at the address listed above, or by telephone at 571-272-0584 or by facsimile sent to the general Office facsimile number, 571-273-8300.

/MC Seidel/
Marianne C. Seidel, Quality Assurance Specialist
Technology Center 1600

UNITED STATES PATENT AND TRADEMARK OFFICE

UNITED STATES DEPARTMENT OF COMMERCE
United States Patent and Trademark Office
Address: COMMISSIONER FOR PATENTS
P.O. Box 1450
Alexandria, Virginia 22313-1450
www.uspto.gov

APPLICATION NO.	FILING DATE	FIRST NAMED INVENTOR	ATTORNEY DOCKET NO.	CONFIRMATION NO.
12/611,806	11/03/2009	Fabienne Guehenneux	1017753-000279	3182

21839 7590 12/28/2011

BUCHANAN, INGERSOLL & ROONEY PC
POST OFFICE BOX 1404
ALEXANDRIA, VA 22313-1404

EXAMINER	
SNYDER, STUART	

ART UNIT	PAPER NUMBER
1648	

NOTIFICATION DATE	DELIVERY MODE
12/28/2011	ELECTRONIC

Please find below and/or attached an Office communication concerning this application or proceeding.

The time period for reply, if any, is set in the attached communication.

Notice of the Office communication was sent electronically on above-indicated "Notification Date" to the following e-mail address(es):

ADIPFDD@bipc.com
offserv@bipc.com

UNITED STATES PATENT AND TRADEMARK OFFICE

Commissioner for Patents
United States Patent and Trademark Office
P.O. Box 1450
Alexandria, VA 22313-1450
www.uspto.gov

DEC 2 3 2011

In re Application of	:	
Fabienne Guehenneux, et al.	:	
Serial No. 12/611806	:	NOTICE OF WITHDRAWAL
Filed: November 3, 2009	:	FROM ISSUE
For: PRODUCTION OF POXVIRUSES WITH ADHERENT OR NON ADHERENT AVIAN CELL LINES	:	UNDER 37 CFR 1.313(b)

The purpose of this communication is to inform you that the above-identified application is being withdrawn from issue pursuant to 37 CFR 1.313.

The application is being withdrawn from issue in order for the examiner to place appropriate art rejections on the record. The reasons therefore will be communicated to you by the examiner.

PTO records reveal that the issue fee has not been paid. If the issue fee has been submitted, the applicant may request a refund or may request that the fee be credited to a deposit account. However, applicant may wait until the application is either again found allowable or held abandoned. If the application is allowed, upon receipt of a new Notice of Allowance and Issue Fee Due, applicant may request that the previously submitted issue fee be applied toward payment of the issue fee in the amount identified on the new Notice of Allowance and Issue Fee Due. If the application is abandoned, applicant may request either a refund or a credit to a deposit account.

The application is being forwarded to the examiner for action.

George C. Elliott, for

Jacqueline M. Stone, Director
Technology Center 1600

BUCHANAN, INGERSOLL & ROONEY PC
POST OFFICE BOX 1401
ALEXANDRIA, VA 22313-1404

UNITED STATES PATENT AND TRADEMARK OFFICE

UNITED STATES DEPARTMENT OF COMMERCE
United States Patent and Trademark Office
Address: COMMISSIONER FOR PATENTS
P.O. Box 1450
Alexandria, Virginia 22313-1450
www.uspto.gov

APPLICATION NO.	FILING DATE	FIRST NAMED INVENTOR	ATTORNEY DOCKET NO.	CONFIRMATION NO.
12/611,812	11/03/2009	Tetsuo Saitoh	6639P821	3192

7590 03/07/2011

BLAKELY SOKOLOFF TAYLOR & ZAFMAN LLP
1279 OAKMEAD PARKWAY
SUNNYVALE, CA 94085-4040

EXAMINER	
YE, LIN	

ART UNIT	PAPER NUMBER
2622	

MAIL DATE	DELIVERY MODE
03/07/2011	PAPER

DECISION GRANTING PETITION UNDER 37 CFR 1.138(d)

The declaration of express abandonment is recognized

This is in response to the petition under 37 CFR 1.138(d), requesting for a refund of any previously paid search fee and excess claims fee in the above-identified application.

The petition is granted.

The express abandonment is recognized. Any previously paid search fee and excess claims fee are hereby refunded.

Telephone inquiries should be directed to the Office of Data Management at (571) 272-4200.

Patent Publication Branch
Office of Data Management

Doc Code: PPH.PCT.652
Document Description: Petition to make special under PCT-Patent Pros Hwy

PTO/SB/20PCT-KR (06-10)
Approved for use through 01/31/2012. OMB 0651-0058
U.S. Patent and Trademark Office; U. S. DEPARTMENT OF COMMERCE
Under the Paperwork Reduction Act of 1995, no persons are required to respond to a collection of information unless it displays a valid OMB control number.

REQUEST FOR PARTICIPATION IN THE PATENT COOPERATION TREATY - PATENT PROSECUTION HIGHWAY (PCT-PPH) PILOT PROGRAM BETWEEN THE KOREAN INTELLECTUAL PROPERTY OFFICE (KIPO) AND THE USPTO

Application No:	12/611,817	Filing date:	November 3, 2009
First Named Inventor:	WEISSMAN, Jonathan		
Title of the invention:	METHODS FOR DETECTING MODIFICATION RESISTANT NUCLEIC ACIDS		

THIS REQUEST FOR PARTICIPATION IN THE PCT-PPH PILOT PROGRAM ALONG WITH THE REQUIRED DOCUMENTS MUST BE SUBMITTED VIA EFS-WEB. INFORMATION REGARDING EFS-WEB IS AVAILABLE AT HTTP://WWW.USPTO.GOV/EBC/EFS_HELP.HTML

APPLICANT HEREBY REQUESTS PARTICIPATION IN THE PCT-PPH PROGRAM AND PETITIONS TO MAKE THE ABOVE-IDENTIFIED APPLICATION SPECIAL UNDER THE PCT-PPH PROGRAM.

The above-identified application is (1) a national stage entry of the corresponding PCT application, or (2) a national stage entry of another PCT application which claims priority to the corresponding PCT application, or (3) a national application that claims domestic/ foreign priority to the corresponding PCT application, or (4) a national application which forms the basis for the priority claim in the corresponding PCT application, or (5) a continuing application of a U.S. application that satisfies one of (1) to (4) above, or (6) a U.S. application that claims domestic benefit to a U.S. provisional application which forms the basis for the priority claim in the corresponding PCT application.

The corresponding PCT application number(s) is/are: PCT/US2009/063165

The international filing date of the corresponding PCT application(s) is/are:
November 3, 2009

I. List of Required Documents:

a. **A copy of the latest international work product (WO/ISA, WO/IPEA, or IPER) in the above-identified corresponding PCT application(s)**

☑ Is attached.

☐ Is not attached because the document is already in the U.S. application.

b. **A copy of all claims which were indicated as having novelty, inventive step and industrial applicability in the above-identified corresponding PCT application(s).**

☑ Is attached.

☐ Is not attached because the document is already in the U.S. application.

c. **English translations of the documents in a. and b. above are attached (if the documents are not in the English language). A statement that the English translation is accurate is attached for the document in b. above.**

This collection of information is required by 35 U.S.C. 119, 37 CFR 1.55, and 37 CFR 1.102(d). The information is required to obtain or retain a benefit by the public, which is to file (and by the USPTO to process) an application. Confidentiality is governed by 35 U.S.C. 122 and 37 CFR 1.11 and 1.14. This collection is estimated to take 2 hours to complete, including gathering, preparing, and submitting the completed application form to the USPTO. Time will vary depending upon the individual case. Any comments on the amount of time you require to complete this form and/or suggestions for reducing this burden should be sent to the Chief Information Officer, U.S. Patent and Trademark Office, U.S. Department of Commerce, P.O. Box 1450, Alexandria, VA 22313-1450. DO NOT SEND FEES OR COMPLETED FORMS TO THIS ADDRESS.

PTO/SB/20PCT-KR (06-10)
Approved for use through 01/31/2012. OMB 0651-0058
U.S.Patent and Trademark Office; U.S. DEPARTMENT OF COMMERCE
Under the Paperwork Reduction Act of 1995, no persons are required to respond to a collection of information unless it displays a valid OMB control number.

REQUEST FOR PARTICIPATION IN THE PCT-PPH PILOT PROGRAM BETWEEN THE KIPO AND THE USPTO

(continued)

Application No.:	12/611,817
First Named Inventor:	WEISSMAN, Jonathan

d. **(1) An information disclosure statement listing the documents cited in the international work products (ISR, WO/ISA, WO/IPEA, IPER) of the corresponding PCT application.**

☐ Is attached

☑ Has already been filed in the above-identified U.S. application on October 29, 2010

(2) Copies of all documents (except) for U.S. patents or U.S. patent application publications)

☐ Are attached.

☑ Have already been filed in the above-identified U.S. application on October 29, 2010

II. Claims Correspondence Table:

Claims in US Application	Patentable Claims in the corresponding PCT Application	Explanation regarding the correspondence
1-16, 23-33	1-16, 23-33	These claims in the two applications are identical to each other.
22	22	Claim 22 (US appl.) has been amended from a dependent to independent claim.

III. All the claims in the US application sufficiently correspond to the patentable claims in the corresponding PCT application.

Signature	Date April 11, 2011
Name (Print/Typed) Kenneth E. Jenkins, Ph.D.	Registration Number 51,846

Privacy Act Statement

The **Privacy Act of 1974 (P.L. 93-579)** requires that you be given certain information in connection with your submission of the attached form related to a patent application or patent. Accordingly, pursuant to the requirements of the Act, please be advised that: (1) the general authority for the collection of this information is 35 U.S.C. 2(b)(2); (2) furnishing of the information solicited is voluntary; and (3) the principal purpose for which the information is used by the U.S. Patent and Trademark Office is to process and/or examine your submission related to a patent application or patent. If you do not furnish the requested information, the U.S. Patent and Trademark Office may not be able to process and/or examine your submission, which may result in termination of proceedings or abandonment of the application or expiration of the patent.

The information provided by you in this form will be subject to the following routine uses:

1. The information on this form will be treated confidentially to the extent allowed under the Freedom of Information Act (5 U.S.C. 552) and the Privacy Act (5 U.S.C 552a). Records from this system of records may be disclosed to the Department of Justice to determine whether disclosure of these records is required by the Freedom of Information Act.
2. A record from this system of records may be disclosed, as a routine use, in the course of presenting evidence to a court, magistrate, or administrative tribunal, including disclosures to opposing counsel in the course of settlement negotiations.
3. A record in this system of records may be disclosed, as a routine use, to a Member of Congress submitting a request involving an individual, to whom the record pertains, when the individual has requested assistance from the Member with respect to the subject matter of the record.
4. A record in this system of records may be disclosed, as a routine use, to a contractor of the Agency having need for the information in order to perform a contract. Recipients of information shall be required to comply with the requirements of the Privacy Act of 1974, as amended, pursuant to 5 U.S.C. 552a(m).
5. A record related to an International Application filed under the Patent Cooperation Treaty in this system of records may be disclosed, as a routine use, to the International Bureau of the World Intellectual Property Organization, pursuant to the Patent Cooperation Treaty.
6. A record in this system of records may be disclosed, as a routine use, to another federal agency for purposes of National Security review (35 U.S.C. 181) and for review pursuant to the Atomic Energy Act (42 U.S.C. 218(c)).
7. A record from this system of records may be disclosed, as a routine use, to the Administrator, General Services, or his/her designee, during an inspection of records conducted by GSA as part of that agency's responsibility to recommend improvements in records management practices and programs, under authority of 44 U.S.C. 2904 and 2906. Such disclosure shall be made in accordance with the GSA regulations governing inspection of records for this purpose, and any other relevant (*i.e.*, GSA or Commerce) directive. Such disclosure shall not be used to make determinations about individuals.
8. A record from this system of records may be disclosed, as a routine use, to the public after either publication of the application pursuant to 35 U.S.C. 122(b) or issuance of a patent pursuant to 35 U.S.C. 151. Further, a record may be disclosed, subject to the limitations of 37 CFR 1.14, as a routine use, to the public if the record was filed in an application which became abandoned or in which the proceedings were terminated and which application is referenced by either a published application, an application open to public inspection or an issued patent.
9. A record from this system of records may be disclosed, as a routine use, to a Federal, State, or local law enforcement agency, if the USPTO becomes aware of a violation or potential violation of law or regulation.

UNITED STATES PATENT AND TRADEMARK OFFICE

UNITED STATES DEPARTMENT OF COMMERCE
United States Patent and Trademark Office
Address: COMMISSIONER FOR PATENTS
P.O. Box 1450
Alexandria, Virginia 22313-1450
www.uspto.gov

APPLICATION NO.	FILING DATE	FIRST NAMED INVENTOR	ATTORNEY DOCKET NO.	CONFIRMATION NO.
12/611,817	11/03/2009	JONATHAN WEISSMAN	84850-802254	3200

20350 7590 05/23/2011

KILPATRICK TOWNSEND & STOCKTON LLP
TWO EMBARCADERO CENTER
EIGHTH FLOOR
SAN FRANCISCO, CA 94111-3834

EXAMINER	
MUMMERT, STEPHANIE KANE	
ART UNIT	**PAPER NUMBER**
1637	

NOTIFICATION DATE	DELIVERY MODE
05/23/2011	ELECTRONIC

Please find below and/or attached an Office communication concerning this application or proceeding.

The time period for reply, if any, is set in the attached communication.

Notice of the Office communication was sent electronically on above-indicated "Notification Date" to the following e-mail address(es):

Docket@kilpatricktownsend.com
ipefiling@kilpatricktownsend.com
jlhice@kilpatrick.foundationip.com

UNITED STATES PATENT AND TRADEMARK OFFICE

Commissioner for Patents
United States Patent and Trademark Office
P.O. Box 1450
Alexandria, VA 22313-1450
www.uspto.gov

MAY 2 3 2011

KILPATR ICK TOWNSEND & STOC KTON, LLP
Two Embarcadero Center, Eighth Floor
San Francisco, CA 94111-3834

In re Application of	:	DECISION ON REQUEST TO
WEISSMAN ET AL.	:	PARTICIPATE IN PATENT
Application No. 12/611,817	:	PROSECUTION HIGHWAY
Filed: November 3, 2009	:	PROGRAM AND PETITION
Attorney Docket No. 18062G-011410US	:	TO MAKE SPECIAL UNDER
	:	37 CFR 1.102(a)

This is a decision on the request to participate in the Patent Cooperation Treaty - Patent Prosecution Highway (PCT-PPH) program and the petition under 37 CFR 1.102(a), filed April 11, 2011, to make the above-identified application special.

The request and petition are **DISMISSED**.

A grantable request to participate in the PCT-PPH program and petition to make special require:

(1) The U.S. application is (1) a national stage entry of the corresponding PCT application, or (2) a national stage entry of another PCT application which claims priority to the corresponding PCT application, or (3) a national stage application that claims domestic/foreign priority to the corresponding PCT application, or (4) a national application which forms the basis for the priority claim in the corresponding PCT application, or (5) a continuing application of a U.S. application that satisfies one of (1) to (4) above, or (6) a U.S. application that claims domestic benefit to a U.S. provisional application which forms the basis for the priority claim in the corresponding PCT application;
(2) The latest work product in the international phase of the PCT application corresponding to the U.S. application, namely the WO/ISA, or the WO/IPEA, or the IPER, indicates at least one claim in the PCT application has novelty, inventive step and industrial applicability;
(3) All the claims in the U.S. application must sufficiently correspond or be amended to sufficiently correspond to one or more of those claims indicated as having novelty, inventive step and industrial applicability and free of any observation described in Box VIII in the latest work product of the corresponding PCT application;
(4) Examination of the U.S. application has not begun;
(5) Applicant must submit a copy of latest international work product, WO/ISA, or WO/IPEA or IPER, which indicated that the claim(s) has/have novelty, inventive step and industrial applicability along with an English translation thereof if the copy of the latest international work product is not in the English language;
(6) Applicant must submit the claims from the corresponding PCT application which were indicated as having novelty, inventive step and industrial applicability in the latest work product of the PCT application along with an English translation thereof and a statement that the English translation is accurate if the claims are not in the English language;

(7) Applicant must submit a claim correspondence table in English; and
(8) Applicant must submit an IDS listing the documents cited in the international work products (ISR, WO/ISA, WO/IPEA, IPER) of the PCT application along with copies of documents except U.S. patents or U.S. patent application publications.

The request to participate in the PCT-PPH program and petition fails to comply with the requirement because:

The claims correspondence table and the remarks filed April 11, 2011 suggest claims 17-21 have been cancelled and claim 22 has been amended, however no amended claim listing has been filed. Therefore, not all of the claims in the U.S. application sufficiently correspond to one or more of those claims indicated as having novelty, inventive step and industrial applicability in the PCT application.

Applicant is given a time period of **ONE MONTH or THIRTY DAYS**, whichever is longer, to correct the deficiencies. **NO EXTENSION OF TIME UNDER 37 CFR 1.136 IS PERMITTED.** If the deficiencies are not corrected with the time period given, the application will await action in its regular turn.

Response must be submitted via EFS-Web with the document description: Petition to make special under Patent Pros Hwy. Information regarding EFS-Web is available at http://www.uspto.gov/ebc/efs_help.html.

Telephone inquiries concerning this decision should be directed to Cecilia Tsang at 571-272-0562.

All other inquiries concerning the examination or status of the application should be directed to Patent Application Information Retrieval (PAIR) system.

Cecilia Tsang
Supervisory Patent Examiner
TC 1600

Doc Code: PPH.PCT.652
Document Description: Petition to make special under PCT-Patent Pros Hwy

PTO/SB/20PCT-KR (06-10)
Approved for use through 01/31/2012. OMB 0651-0058
U.S. Patent and Trademark Office; U. S. DEPARTMENT OF COMMERCE
Under the Paperwork Reduction Act of 1995, no persons are required to respond to a collection of information unless it displays a valid OMB control number.

REQUEST FOR PARTICIPATION IN THE PATENT COOPERATION TREATY - PATENT PROSECUTION HIGHWAY (PCT-PPH) PILOT PROGRAM BETWEEN THE KOREAN INTELLECTUAL PROPERTY OFFICE (KIPO) AND THE USPTO

Application No:	12/611,817	Filing date:	November 3, 2009
First Named Inventor:	WEISSMAN, Jonathan		
Title of the Invention:	METHODS FOR DETECTING MODIFICATION RESISTANT NUCLEIC ACIDS		

THIS REQUEST FOR PARTICIPATION IN THE PCT-PPH PILOT PROGRAM ALONG WITH THE REQUIRED DOCUMENTS MUST BE SUBMITTED VIA EFS-WEB. INFORMATION REGARDING EFS-WEB IS AVAILABLE AT HTTP://WWW.USPTO.GOV/EBC/EFS_HELP.HTML

APPLICANT HEREBY REQUESTS PARTICIPATION IN THE PCT-PPH PROGRAM AND PETITIONS TO MAKE THE ABOVE-IDENTIFIED APPLICATION SPECIAL UNDER THE PCT-PPH PROGRAM.

The above-identified application is (1) a national stage entry of the corresponding PCT application, or (2) a national stage entry of another PCT application which claims priority to the corresponding PCT application, or (3) a national application that claims domestic/ foreign priority to the corresponding PCT application, or (4) a national application which forms the basis for the priority claim in the corresponding PCT application, or (5) a continuing application of a U.S. application that satisfies one of (1) to (4) above, or (6) a U.S. application that claims domestic benefit to a U.S. provisional application which forms the basis for the priority claim in the corresponding PCT application.

The corresponding PCT application number(s) is/are: PCT/US2009/063165

The international filing date of the corresponding PCT application(s) is/are: November 3, 2009

I. List of Required Documents:

a. **A copy of the latest international work product (WO/ISA, WO/IPEA, or IPER) in the above–identified corresponding PCT application(s)**

☑ Is attached.

☐ Is not attached because the document is already in the U.S. application.

b. **A copy of all claims which were indicated as having novelty, inventive step and industrial applicability in the above-identified corresponding PCT application(s).**

☑ Is attached.

☐ Is not attached because the document is already in the U.S. application.

c. **English translations of the documents in a. and b. above are attached (if the documents are not in the English language). A statement that the English translation is accurate is attached for the document in b. above.**

This collection of information is required by 35 U.S.C. 119, 37 CFR 1.55, and 37 CFR 1.102(d). The information is required to obtain or retain a benefit by the public, which is to file (and by the USPTO to process) an application. Confidentiality is governed by 35 U.S.C. 122 and 37 CFR 1.11 and 1.14. This collection is estimated to take 2 hours to complete, including gathering, preparing, and submitting the completed application form to the USPTO. Time will vary depending upon the individual case. Any comments on the amount of time you require to complete this form and/or suggestions for reducing this burden should be sent to the Chief Information Officer, U.S. Patent and Trademark Office, U.S. Department of Commerce, P.O. Box 1450, Alexandria, VA 22313-1450. DO NOT SEND FEES OR COMPLETED FORMS TO THIS ADDRESS.

PTO/SB/20PCT-KR (06-10)
Approved for use through 01/31/2012. OMB 0651-0058
U.S.Patent and Trademark Office; U.S. DEPARTMENT OF COMMERCE
Under the Paperwork Reduction Act of 1995, no persons are required to respond to a collection of information unless it displays a valid OMB control number.

REQUEST FOR PARTICIPATION IN THE PCT-PPH PILOT PROGRAM BETWEEN THE KIPO AND THE USPTO

(continued)

Application No.:	12/611,817
First Named Inventor:	WEISSMAN, Jonathan

d. **(1) An information disclosure statement listing the documents cited in the international work products (ISR, WO/ISA, WO/IPEA, IPER) of the corresponding PCT application.**

☐ Is attached

☑ Has already been filed in the above-identified U.S. application on October 29, 2010

(2) Copies of all documents (except) for U.S. patents or U.S. patent application publications)

☐ Are attached.

☑ Have already been filed in the above-identified U.S. application on October 29, 2010

II. Claims Correspondence Table:

Claims in US Application	Patentable Claims in the corresponding PCT Application	Explanation regarding the correspondence
1-16, 23-33	1-16, 23-33	These claims in the two applications are identical to each other.
22	22	Claim 22 (US appl.) has been amended from a dependent to independent claim.

III. All the claims in the US application sufficiently correspond to the patentable claims in the corresponding PCT application.

Signature /Kenneth E. Jenkins/	Date June 23, 2011
Name (Print/Typed) Kenneth E. Jenkins, Ph.D.	Registration Number 51,846

Privacy Act Statement

The **Privacy Act of 1974 (P.L. 93-579)** requires that you be given certain information in connection with your submission of the attached form related to a patent application or patent. Accordingly, pursuant to the requirements of the Act, please be advised that: (1) the general authority for the collection of this information is 35 U.S.C. 2(b)(2); (2) furnishing of the information solicited is voluntary; and (3) the principal purpose for which the information is used by the U.S. Patent and Trademark Office is to process and/or examine your submission related to a patent application or patent. If you do not furnish the requested information, the U.S. Patent and Trademark Office may not be able to process and/or examine your submission, which may result in termination of proceedings or abandonment of the application or expiration of the patent.

The information provided by you in this form will be subject to the following routine uses:

1. The information on this form will be treated confidentially to the extent allowed under the Freedom of Information Act (5 U.S.C. 552) and the Privacy Act (5 U.S.C 552a). Records from this system of records may be disclosed to the Department of Justice to determine whether disclosure of these records is required by the Freedom of Information Act.
2. A record from this system of records may be disclosed, as a routine use, in the course of presenting evidence to a court, magistrate, or administrative tribunal, including disclosures to opposing counsel in the course of settlement negotiations.
3. A record in this system of records may be disclosed, as a routine use, to a Member of Congress submitting a request involving an individual, to whom the record pertains, when the individual has requested assistance from the Member with respect to the subject matter of the record.
4. A record in this system of records may be disclosed, as a routine use, to a contractor of the Agency having need for the information in order to perform a contract. Recipients of information shall be required to comply with the requirements of the Privacy Act of 1974, as amended, pursuant to 5 U.S.C. 552a(m).
5. A record related to an International Application filed under the Patent Cooperation Treaty in this system of records may be disclosed, as a routine use, to the International Bureau of the World Intellectual Property Organization, pursuant to the Patent Cooperation Treaty.
6. A record in this system of records may be disclosed, as a routine use, to another federal agency for purposes of National Security review (35 U.S.C. 181) and for review pursuant to the Atomic Energy Act (42 U.S.C. 218(c)).
7. A record from this system of records may be disclosed, as a routine use, to the Administrator, General Services, or his/her designee, during an inspection of records conducted by GSA as part of that agency's responsibility to recommend improvements in records management practices and programs, under authority of 44 U.S.C. 2904 and 2906. Such disclosure shall be made in accordance with the GSA regulations governing inspection of records for this purpose, and any other relevant (*i.e.*, GSA or Commerce) directive. Such disclosure shall not be used to make determinations about individuals.
8. A record from this system of records may be disclosed, as a routine use, to the public after either publication of the application pursuant to 35 U.S.C. 122(b) or issuance of a patent pursuant to 35 U.S.C. 151. Further, a record may be disclosed, subject to the limitations of 37 CFR 1.14, as a routine use, to the public if the record was filed in an application which became abandoned or in which the proceedings were terminated and which application is referenced by either a published application, an application open to public inspection or an issued patent.
9. A record from this system of records may be disclosed, as a routine use, to a Federal, State, or local law enforcement agency, if the USPTO becomes aware of a violation or potential violation of law or regulation.

UNITED STATES PATENT AND TRADEMARK OFFICE

Commissioner for Patents
United States Patent and Trademark Office
P.O. Box 1450
Alexandria, VA 22313-1450
www.uspto.gov

BLAKELY SOKOLOFF TAYLOR & ZAFMAN LLP
1279 OAKMEAD PARKWAY
SUNNYVALE CA 94085-4040

MAIL

SEP 03 2010

DIRECTOR'S OFFICE
TECHNOLOGY CENTER 2600

In re Application of :
HONDA, YUICHI :
Application No. 12/611,836 :
Filed: November 03, 2009 :
Attorney Docket No. 6639P827 :

DECISION ON REQUEST TO PARTICIPATE IN PATENT PROSECUTION HIGHWAY PROGRAM AND PETITION TO MAKE SPECIAL UNDER 37 CFR 1.102(d)

This is a decision on the request to participate in the Patent Prosecution Highway (PPH) program and the petition under 37 CFR 1.102(d), filed July 13, 2010 to make the above-identified application special.

The request and petition are **GRANTED**.

A grantable request to participate in the PPH program and petition to make special require:

(1) The U.S. application must validly claim priority under 35 U.S.C. 119(a) to one or more applications filed in the JPO;
(2) Applicant must submit a copy of the allowable/patentable claim(s) from the JPO application(s) along with an English translation thereof and a statement that the English translation is accurate;
(3) All the claims in the U.S. application must sufficiently correspond or be amended to sufficiently correspond to the allowable/patentable claim(s) in the JPO application(s);
(4) Examination of the U.S. application has not begun;
(5) Applicant must submit a copy of all the office actions from each of the JPO application(s) containing the allowable/patentable claim(s) along with an English translation thereof and a statement that the English translation is accurate; and
(6) Applicant must submit an IDS listing the documents cited by the JPO examiner in the JPO office action along with copies of documents except U.S. patents or U.S. patent application publications.

The request to participate in the PPH program and petition comply with the above requirements. Accordingly, the above-identified application has been accorded "special" status.

Telephone inquiries concerning this decision should be directed to Michael Horabik at 571-272-3068.

All other inquiries concerning the examination or status of the application should be directed to Patent Application Information Retrieval (PAIR) system.

The application is being forwarded to the examiner for action on the merits commensurate with this decision.

/Michael Horabik/

Michael Horabik
Quality Assurance Specialist
Technology Center 2600
Communications

UNITED STATES PATENT AND TRADEMARK OFFICE

Commissioner for Patents
United States Patent and Trademark Office
P.O. Box 1450
Alexandria, VA 22313-1450
www.uspto.gov
DIW Feb-11

JELLETT LAW, PS
MATTHEW JELLETT, ESQ.
910 HARRIS AVE
SUITE A205
BELLINGHAM WA 98225

MAILED

FEB 03 2011

OFFICE OF PETITIONS

In re Application of :
Edward Foster Carr :
Application Number: 12/611,854 : ON PETITION
Filing Date: 11/03/2009 :
Attorney Docket Number: :
P208250PAT :

This is a decision on the petition, filed on November 29, 2010, under 37 CFR 1.181, which is treated as a petition to withdraw the holding of abandonment.

The petition is **DISMISSED**.

This application became abandoned on January 19, 2010, for failure to properly reply to the Notice to File Missing Parts of Nonprovisional Application mailed on November 18, 2009, which set a two (2) month shortened period for reply. No extensions of the time for reply were obtained. Notice of Abandonment was mailed on November 9, 2010.

Petitioner's counsel assert that the holding of abandonment should be withdrawn because counsel assumed that no response was due to the Notice to File Missing Parts of Nonprovisional Application mailed on November 18, 2009.

A review of the record reveals that:

1. On November 3, 2009, the application was filed without an executed declaration.

2. On November 9, 2009, an executed declaration was filed.

3. On November 18, 2009, the Notice to File Missing Parts of Nonprovisional Application was mailed, requiring an executed declaration and a surcharge for its late filing.

4. Also on November 18, 2009, a Notice of Incomplete Reply (Nonprovisional) was mailed, stating that the $65.00 surcharge was required.

Petitioner's arguments have been considered, but are not persuasive.

35 U.S.C. 111(a)(3) states, in pertinent part, the fee and oath may be submitted after the specification and any required drawing are submitted, within such period and under such conditions, including the payment of a surcharge, as may be prescribed by the Director.

37 CFR 1.16(f) states, in pertinent part, that the surcharge for filing any of the basic filing fee, the search fee, the examination fee, or the oath or declaration on a date later than the filing date of the application, except provisional applications is, for a small entity..... $65.00.

37 CFR 1.135(b) states, in pertinent part, that prosecution of an application to save it from abandonment must include such complete and proper reply as the condition of the application may require.

It is undisputed that the executed declaration was filed on November 9, 2009, which is after the date the application was filed, November 3, 2009. Accordingly, the surcharge was required to be paid in response to the Notice to File Missing Parts of Nonprovisional Application mailed on November 18, 2009.

Furthermore, petitioner was informed in the both the Notice to File Missing Parts of Nonprovisional Application and in Notice of Incomplete Reply (Nonprovisional) both mailed on November 18, 2009, that the surcharge was required.

In summary, while it is unfortunate that petitioner assumed that no response was due to the Notice to File Missing Parts of Nonprovisional Application mailed on November 18, 2009, said assumption was to the detriment of petitioner, as a response was required. The required surcharge not having been timely filed, the application became abandoned as a matter of law for failure to timely file a proper reply.

ALTERNATIVE VENUE

Petitioner may wish to consider filing a renewed petition under 37 CFR 1.137(b), which now provides that where the delay in reply was unintentional, a petition may be filed to revive an abandoned application or a lapsed patent pursuant to 37 CFR 1.137(b). A grantable petition pursuant to 37 CFR 1.137(b) must be accompanied by:

(1) the required reply, unless previously filed. In a nonprovisional application abandoned for failure to prosecute, the required reply may be met by the filing of a continuing application. In a nonprovisional utility or plant application filed on or after June 8, 1995, and abandoned for failure to prosecute, the required reply may also be met by the filing of a request for continued examination in compliance with § 1.114. In an application or patent, abandoned or lapsed for failure to pay the issue fee or any portion thereof, the required reply must be the payment of the issue fee or any outstanding balance thereof. In an application, abandoned for failure to pay the publication fee, the required reply must include payment of the publication fee.

(2) the petition fee as set forth in 37 CFR 1.17(m);

(3) a statement that the entire delay in filing the required reply from the due date for the reply until the filing of a grantable petition pursuant to 37 CFR 1.137(b) was unintentional. The Director may required additional information where there is a question whether the delay was unintentional; and

(4) any terminal disclaimer (and fee as set forth in 37 CFR 1.20(d)) required pursuant to 37 CFR 1.137(c)).

The filing of a petition under the unintentional standard cannot be intentionally delayed and therefore should be filed promptly. A person seeking revival due to unintentional delay cannot make a statement that the delay was unintentional unless the entire delay, including the delay from the date it was discovered that the application was abandoned until the filing of the petition to revive under 37 CFR 1.137(b), was unintentional. A statement that the delay was unintentional is not appropriate if petitioner intentionally delayed the filing of a petition for revival under 37 CFR 1.137(b).

A copy of the form for filing a petition under 37 CFR 1.137(b) to revive an application unintentionally abandoned is enclosed herewith for petitioner's convenience.

Any request for reconsideration must be filed within **TWO MONTHS** of the date of this decision. **This period may not be extended.**[1]

Further correspondence with respect to this matter should be addressed as follows:

By mail: Mail Stop Petition
Commissioner for Patents
P.O. Box 1450
Alexandria, VA 22313-1450

By FAX: (571) 273-8300
Attn: Office of Petitions

By hand: Customer Service Window
Mail Stop Petition
Randolph Building
401 Dulany Street
Alexandria, VA 22314

A reply may also be filed using the EFS-Web system of the USPTO.

Telephone inquiries concerning this matter may be directed to the undersigned at (571) 272-3231.

DWood

Douglas I. Wood
Senior Petitions Attorney
Office of Petitions

Enclosure: Form PTO/SB/64

[1] 37 CFR 1.181(f).

UNITED STATES PATENT AND TRADEMARK OFFICE

Commissioner for Patents
United States Patent and Trademark Office
P.O. Box 1450
Alexandria, VA 22313-1450
www.uspto.gov

JELLETT LAW, PS
MATTHEW JELLETT, ESQ.
910 HARRIS AVE
SUITE A205
BELLINGHAM WA 98225

MAILED
MAR 18 2011
OFFICE OF PETITIONS

In re Application of :
Edward Foster Carr :
Application Number: 12/611,854 : ON PETITION
Filing Date: 11/03/2009 :
Attorney Docket Number: :
P208250PAT :

This is a decision in response to the petition under 37 CFR 1.137(b) filed on February 6, 2011, to revive the above-identified application.

The petition is **GRANTED**.

This application became abandoned on January 19, 2010, for failure to properly reply to the Notice to File Missing Parts of Nonprovisional Application mailed on November 18, 2009, which set a two (2) month shortened period for reply. No extensions of the time for reply in accordance with 37 CFR 1.136(a) were obtained. Notice of Abandonment was mailed on November 9, 2010. The petition filed on November 29, 2010 was dismissed on February 3, 2011.

Receipt of the surcharge paid on November 29, 2010, is acknowledged.

The application is referred to the Office of Patent Application Processing for further processing.

Telephone inquiries concerning this matter may be directed to the undersigned at (571) 272-3231.

DWood

Douglas I. Wood
Senior Petitions Attorney
Office of Petitions

UNITED STATES PATENT AND TRADEMARK OFFICE

Commissioner for Patents
United States Patent and Trademark Office
P.O. Box 1450
Alexandria, VA 22313-1450
www.uspto.gov

Jellett Law, PS
Matthew Jellett, Esq.
910 Harris Ave
Suite A205
BELLINGHAM WA 98225

MAILED

FEB 27 2012

OFFICE OF PETITIONS

In re Application of :
Edward Foster Carr :
Application No. 12/611,854 : DECISION ON PETITION
Filed: November 3, 2009 : TO WITHDRAW
Attorney Docket No. P208250PAT : FROM RECORD
:

This is a decision on the Request to Withdraw as attorney or agent of record under 37 C.F.R. § 1.36(b), filed February 6, 2012.

The request is **APPROVED**.

A grantable request to withdraw as attorney/agent of record must be signed by every attorney/agent seeking to withdraw or contain a clear indication that one attorney is signing on behalf of another/others. A request to withdraw will not be approved unless at least 30 (thirty) days would remain between the date of approval and the later of the expiration date of a time to file a response or the expiration date of the maximum time period which can be extended under 37 C.F.R. § 1.136(a).

The request was signed by Matthew Jellett, former attorney of record. Currently, employed with the U.S. Patent and Trademark Office, Matthew Jellett, has been withdrawn.

Applicant is reminded that there is no attorney of record at this time.

The correspondence address has been changed and is copied below.

Telephone inquiries concerning this decision should be directed to Kimberly Inabinet at 571-272-4618.

/Kimberly Inabinet/

Kimberly Inabinet
Petitions Examiner
Office of Petitions

cc: Edward Carr
1520 34th Street
Anacortes, WA 98221

UNITED STATES PATENT AND TRADEMARK OFFICE

UNITED STATES DEPARTMENT OF COMMERCE
United States Patent and Trademark Office
Address: COMMISSIONER FOR PATENTS
P.O. Box 1450
Alexandria, Virginia 22313-1450
www.uspto.gov

APPLICATION NUMBER	FILING OR 371(C) DATE	FIRST NAMED APPLICANT	ATTY. DOCKET NO./TITLE
12/611,854	11/03/2009	EDWARD FOSTER CARR	P208250PAT

CONFIRMATION NO. 3252

POWER OF ATTORNEY NOTICE

62772
Jellett Law, PS
Matthew Jellett, Esq.
910 Harris Ave
Suite A205
BELLINGHAM, WA 98225

Date Mailed: 02/22/2012

NOTICE REGARDING CHANGE OF POWER OF ATTORNEY

This is in response to the Power of Attorney filed 02/06/2012.

- The withdrawal as attorney in this application has been accepted. Future correspondence will be mailed to the new address of record. 37 CFR 1.33.

/kainabinet/

Office of Data Management, Application Assistance Unit (571) 272-4000, or (571) 272-4200, or 1-888-786-0101

UNITED STATES PATENT AND TRADEMARK OFFICE

Commissioner for Patents
United States Patent and Trademark Office
P.O. Box 1450
Alexandria, VA 22313-1450
www.uspto.gov

Paper No.

Facebook/Fenwick
Silicon Valley Center
801 California Street
Mountain View CA 94041

MAILED

FEB 15 2011

OFFICE OF PETITIONS

In re Application of :
Hegeman et al. :
Application No. 12/611,874 : DECISION ON PETITION
Filed: November 3, 2009 : UNDER 37 C.F.R. §1.137(f)
Attorney Docket No. 26295-15977 :
Title: USER FEEDBACK-BASED :
SELECTION AND PRIORITIZING OF :
ONLINE ADVERTISEMENTS :

This is a decision on the petition filed on December 7, 2010, pursuant to 37 C.F.R. § 1.137(f), to revive the above-identified application.

A grantable petition pursuant to 37 CFR 1.137(f) must be accompanied by:

(1) Notification of the filing of an application in a foreign country or under a multinational treaty that requires 18 month publication[1];
(2) The petition fee as set forth in 37 C.F.R. § 1.17(m), and;
(3) A statement that the entire delay in filing the notice from the date that the notice was due under 35 U.S.C. § 122(b)(2)(B)(iii) until the date the notice was filed was unintentional. The Commissioner may require additional information where there is a question whether the delay was unintentional.

Petitioner states that the present nonprovisional application is the subject of an application filed in international application

1 See PTO/SB/36 and paragraph on PTO/SB/64a for further information. Both may be downloaded at http://www.uspto.gov/web/forms/index.html.

No. PCT/US10/52956. Petitioner has not indicated when this international application was filed, however Office records show that said international application was filed on October 15, 2010. However, the United States Patent and Trademark Office was unintentionally not notified of this filing within 45 days subsequent to the filing of the subject application in an international application.

In view of the above, this application became abandoned pursuant to 35 U.S.C. § 1.22(b)(2)(B)(iii) and 37 C.F.R. § 1.213(c) for failure to timely notify the Office of the filing of an application under a multilateral international agreement that requires publication of applications 18 months after filing.

Petitioner has submitted the notification of an international filing, paid the petition fee, and has made the proper statement of unintentional delay.

On December 8, 2010, a Notice of Rescission of Nonpublication Request was filed with the Office.

The petition under 37 C.F.R. § 1.137(f) is **GRANTED**.

The present petition has been found to be in compliance with 37 C.F.R. § 1.137(f). Accordingly, the failure to timely notify the Office of a foreign or international filing within 45 days after the date of filing of such foreign or international application as provided by 35 U.S.C. § 122(b)(2)(B)(iii) and 37 C.F.R. § 1.213(c) is accepted as having been unintentionally delayed. The previous Request and Certification under 35 U.S.C. § 122(b)(2)(B)(i), filed with the original application papers, has been rescinded. Office records show that a Communication Regarding Rescission of Nonpublication Request and/or Notice of Foreign Filing was mailed on December 14, 2010, and sets forth a projected publication date of May 5, 2011.

Technology Center 3600 will be notified of this decision.

The general phone number for the Office of Petitions which should be used for status requests is (571) 272-3282. Telephone inquiries regarding *this decision* should be directed to the undersigned at (571) 272-3225.

/Paul Shanoski/
Paul Shanoski
Senior Attorney
Office of Petitions

UNITED STATES PATENT AND TRADEMARK OFFICE

Commissioner for Patents
United States Patent and Trademark Office
P.O. Box 1450
Alexandria, VA 22313-1450
www.uspto.gov

HEWLETT-PACKARD COMPANY
Intellectual Property Administration
3404 E. Harmony Road
Mail Stop 35
FORT COLLINS CO 80528

MAILED
JUL 06 2011
OFFICE OF PETITIONS

In re Application of :
Yoon Kean Wong :
Application No. 12/611,883 : DECISION ON PETITION
Filed: November 3, 2009 :
Attorney Docket No. **PALM-3529.SG.CON** :

This is a decision on the petition, filed March 29, 2011, which is being treated as a petition under 37 CFR 1.181 (no fee) requesting withdrawal of the holding of abandonment in the above-identified application.

The petition is **DISMISSED**.

The Office mailed a Notice to File Corrected Application Papers on February 1, 2010 (Notice), which set a two month extendable period to correct the informalities in the application. No extensions of time were timely obtained. A Notice of Abandonment was mailed November 22, 2010.

DISCUSSION OF PETITION TO WITHDRAW THE HOLDING OF ABANDONMENT

Petitioner has stated in the present petition that the Office withdraw the holding of abandonment because petitioner did not receive the Notice of Incomplete Reply of April 13, 2010 at the correspondence address of record. A review of the record does not indicate any irregularity in the mailing of the Notice and in the absence of any irregularity in the mailing, there is a strong presumption the Notice was properly mailed to the address of record. However, petitioner should note that the Notice mailed on April 13, 2010, merely repeated the requirement (stated below) made earlier in the Notice mailed February 1, 2010:

The required item(s) identified below must be timely submitted to avoid abandonment:

- *Replacement drawings in compliance with 37 CFR 1.84 and 37 CFR 1.12(d) are required. The drawings submitted are not acceptable because:*
  - *The drawing sheets do not have the appropriate margin(s) (see 37 CFR 1.84(g)). Each sheet must include a top margin of at least 2.5 cm. (1 inch), a left side margin of at least 2.5 cm. (1 inch), a right side margin of at least 1.5 cm. (5/8 inch), and a bottom margin of at least 1.0 cm. (3/8 inch).See Figures(s) 4A.*
  - *The drawings must be reasonably free from erasures and must be free from alterations, overwriting, interlineations, folds, and copy marks. See Figure(s) 2A, 3.*

The response filed by the applicant on April 1, 2010 did not meet the above stated requirement concerning replacement drawings. The Notice of April 13, 2010, did not set any new time period of response and noted that the period for reply continued to run from the mail date of the Notice mailed February 1, 2010. The Notice of April 13, 2010, allegedly not received by the applicant, did not set forth any new requirements or any new time period for satisfying the previously stated requirement. Therefore, since petitioner has evidently received the Notice mailed February 1, 2010, the showing required for withdrawing the holding of abandonment is whether petitioner filed a timely response satisfying the above stated requirement concerning replacement drawings. Accordingly, absent any documented evidence to establish a timely filing of a complete reply, the application was abandoned properly and the requested relief of withdrawing the holding of abandonment cannot be granted.

Any request for reconsideration of this decision should be submitted within two (2) months from the mail date of this decision and be entitled "Renewed Petition to Withdraw the Holding of Abandonment under 37 CFR 1.181." *See* 37 CFR 1.181(f). However, petitioner is strongly encouraged to consider filing a petition under 37 CFR 1.137(b) to revive an unintentionally abandoned application instead of filing a renewed petition under 37 CFR 1.181 or a petition under 37 CFR 1.137(a).

ALTERNATIVE VENUE

A grantable petition pursuant to 37 CFR 1.137(b) must be accompanied by:

(1) The reply required to the outstanding Office action or notice, unless previously filed. In nonprovisional utility application abandoned for failure to respond to a non-final Office action, the required reply may be met by filing either (A) an argument or amendment under 37 CFR 1.111 or (B) a continuing application under 37 CFR 1.53(b).

(2) The petition fee as set forth in 37 CFR 1.17(m), **$810 for a small entity**;

(3) A statement that the entire delay in filing the required reply from the due date for the reply until the filing of a grantable petition was unintentional. The Director may require additional information where there is a question whether the delay was unintentional.

A form for filing a petition to revive an unintentionally abandoned application accompanies this decision for petitioner's convenience. If petitioner desires to file a petition under 37 CFR 1.137(b) instead of filing a request for reconsideration, petitioner must complete the enclosed petition form (PTO/SB/64) and pay the appropriate petition fee. In filing a petition under 37 CFR 1.137(b), petitioner is advised to include signed copies of the RCE transmittal and the Amendment.

Petitioner may wish to consider hiring a registered patent attorney or agent to assist in the prosecution of this application. Additionally, petitioner is encouraged to contact the Inventors Assistance Center (IAC) by telephone at 800-786-9199 or 571-272-1000, Monday through Friday from 8:30 AM to 5:30 PM (EST). The IAC provides patent information and services to the public and is staffed by former Supervisory Patent Examiners and experienced Primary Examiners who answer general questions concerning patent examining policy and procedure.

The application file does not indicate a change of address has been filed in this case, although the address given on the petition differs from the address of record. A change of address should be filed in this case in accordance with MPEP 601.03. A courtesy copy of this decision is being mailed to the address noted on the petition. However, until otherwise instructed, all future correspondence regarding this application will be mailed solely to the address of record.

Further correspondence with respect to this matter should be addressed as follows:

By mail: Mail Stop Petition
Commissioner for Patents
P.O. Box 1450
Alexandria, VA 22313-1450

By FAX: (571) 273-8300
Attn: Office of Petitions

By hand: Customer Service Window
Randolph Building
401 Dulany Street
Alexandria, VA 22314

Telephone inquiries related to this decision may be directed to the JoAnne Burke at (571) 272-4584.

/Ramesh Krishnamurthy/
Ramesh Krishnamurthy
Petitions Examiner
Office of Petitions

cc: Anthony C. Murabito
Two North Market Street, Third Floor
San Jose, Ca 95113

Enclosures: Petition For Revival Of An Application For Patent Abandoned Unintentionally Under 37 CFR 1.137(b); Form PTO/SB/64, Privacy Act Statement

UNITED STATES PATENT AND TRADEMARK OFFICE

Commissioner for Patents
United States Patent and Trademark Office
P.O. Box 1450
Alexandria, VA 22313-1450
www.uspto.gov

HEWLETT-PACKARD COMPANY
Intellectual Property Administration
3404 E. Harmony Road
Mail Stop 35
FORT COLLINS CO 80528

MAILED
SEP 12 2011
OFFICE OF PETITIONS

In re Application of :
Yoon Kean Wong :
Application No. 12/611,883 : ON PETITION
Filed: November 3, 2009 :
Attorney Docket No. **PALM-3529.SG.CON** :

This is a decision on the petition under the unintentional provisions of 37 CFR 1.137(b), filed September 1, 2011, to revive the above-identified application.

The petition is **GRANTED**.

The application became abandoned for failure to reply in a timely manner to the Notice to File Corrected Application Papers (Notice), mailed February 1, 2010. The Notice set a period for reply of two (2) months from the mail date of the Notice. No extensions of time under the provisions of 37 CFR 1.136(a) were obtained. Accordingly, the application became abandoned on April 2, 2010.

The petition satisfies the requirements of 37 CFR 1.137(b) in that petitioner has supplied (1) the reply in the form of a replacement drawings, (2) the petition fee of $1,620 (3) a proper statement of unintentional delay.

Telephone inquiries concerning this decision should be directed to JoAnne Burke at 571-272-4584.

This application is being referred to the Office of Patent Application Processing.

JoAnne Burke
Petitions Examiner
Office of Petitions

UNITED STATES PATENT AND TRADEMARK OFFICE

Commissioner for Patents
United States Patent and Trademark Office
P.O. Box 1450
Alexandria, VA 22313-1450
www.uspto.gov

BASF CATALYSTS LLC
100 CAMPUS DRIVE
FLORHAM PARK NJ 07932

MAILED

OCT 07 2010

OFFICE OF PETITIONS

In re Application of	:	
Bull et al.	:	
Application No. 12/612,142	:	DECISION ON PETITION
Filed: November 4, 2009	:	
Attorney Docket No. 5419/5430US/ENG0139-00US	:	

This is a decision on the petition under the unintentional provisions of 37 CFR 1.137(b), filed August 9, 2010, to revive the above-identified application.

The petition is **GRANTED**.

The application became abandoned for failure to reply in a timely manner to the Notice to File Missing Parts of Nonprovisional Application (Notice), mailed November 23, 2009. The Notice set a period for reply of two (2) months from the mail date of the Notice. No extensions of time under the provisions of 37 CFR 1.136(a) were obtained. Accordingly, the application became abandoned on January 24, 2010. A Notice of Abandonment was mailed August 2, 2010.

The petition satisfies the requirements of 37 CFR 1.137(b) in that petitioner has supplied (1) an Oath or Declaration and Surcharge fee of $130.00 (2) the petition fee of $1,620.00, and (3) a proper statement of unintentional delay.

Further, it is not apparent whether the person signing the instant petition was ever given a power of attorney or authorization of agent to prosecute the above-identified application. In accordance with 37 CFR 1.34(a), the signature appearing on the petition shall constitute a representation to the United States Patent and Trademark Office that he/she is authorized to represent the particular party in whose behalf he/she acts.

Additionally, the address given on the petition differs from the address of record. A courtesy copy of this decision is being mailed to the address given on the petition; however, the Office will mail all future correspondence solely to the address of record.

Telephone inquiries concerning this decision should be directed to the undersigned at (571)272-7751.

This application is being referred to the Office of Patent Application Processing for further processing in accordance with this decision on petition.

Joan Olszewski

Joan Olszewski
Petition Examiner
Office of Petitions

cc: Scott S. Servilla
33 Wood Avenue South
2nd Floor, Suite 210
Iselin, NJ 08830

UNITED STATES PATENT AND TRADEMARK OFFICE

Commissioner for Patents
United States Patent and Trademark Office
P.O. Box 1450
Alexandria, VA 22313-1450
www.uspto.gov

MYERS BIGEL SIBLEY & SAJOVEC
PO BOX 37428
RALEIGH, NC 27627

MAILED
SEP 22 2011
OFFICE OF PETITIONS

Applicant: Stafford, et al.
Appl. No.: 12/612,154
Filing Date: November 4, 2009
Title: Methods And Compositions For Producing Vitamin K Dependent Proteins
Attorney Docket No.: 5470-4011PCT2
Pub. No.: US 2010/0255586 A1
Pub. Date: October 7, 2010

This is a decision on the request for a corrected patent application publication under 37 CFR 1.221(b), received on December 7, 2010, for the above-identified application.

The request is DISMISSED.

Applicant requests that the application be republished because the patent application publication contains a material error on the front page of the publication wherein the benefit claim data contain a typographical error.

37 CFR 1.221 (b) is applicable "only when the Office makes a material mistake which is apparent from Office records.... Any request for a corrected publication or revised patent application publication other than provided as provided in paragraph (a) of this section must be filed within two months from the date of the patent application publication. This period is not extendable." A material mistake must affect the public's ability to appreciate the technical disclosure of the patent application publication, to determine the scope of the patent application publication, or to determine the scope of the provisional rights that an applicant may seek to enforce upon issuance of a patent. [1]

The instant request does not identify a material mistake in the publication made by the Office under 37 CFR 1.221(b) with respect to the benefit claim. The benefit claim data is printed on the first page of the specification as it was provided by Applicant on November 4, 2009, which states "The present application is a continuation application of, and claims priority to, U.S. Application No. 11/787,072, filed April 13, 2007, which status is allowed, and which is a continuation-in-part application of U.S. Application No. 10/573,131, pending, which claims the benefit, under 35 U.S.C. 119(e), of U.S. Provisional Application Serial No. 60/505,527, filed September 23, 2003, and is a continuation-in-part of PCT Application No. PCT/US2005/008643, filed March 15,

[1] Changes to Implement Eighteen-Month Publication of Patent Applications, 65 FR 57023, 57038 (Sept. 20, 2000), 1239, Off. Gaz. Pat. Office Notices 63, 75 (Oct. 10, 2000) (final rule).

2005,...." The correct date is printed on the first line of the specification as required by 37 CFR 1.78.

Filing receipt were mailed on May 11, 2010 and July 1, 2010, which improperly listed the benefit claim. To avoid this type of problem in the future applicant's representative should correct the error, if applicable and make a request for a corrected filing receipt prior to export of the application to the publisher and publication of the application.

The applicant is advised that a "request for republication of an application previously published" may be filed under 37 CFR 1.221(a). Such a request for republication "must include a copy of the application compliance with the Office's electronic filing system requirements and be accompanied by the publication fee set forth in § 1.18(d) and the processing fee set forth in § 1.17(i)." If the request for republication does not comply with the electronic filing system requirements, the republication will not take place and the publication fee set forth in § 1.18(d) will be refunded. The processing fee will be retained.

A guide for filing a request for a Pre-Grant Publication, such as a request for republication, may be found on the link below:

http://www.uspto.gov/patents/process/file/efs/guidance/index.jsp

http://www.uspto.gov/ebc/portal/efs/pgpub_quickstart.pdf

Any request for republication under 37 CFR 1.221(a), must be submitted via the EFS system, as a "Pre-Grant Publication".

Inquiries relating to this matter may be directed to Mark Polutta at (571) 272-7709.

Mark Polutta
Senior Legal Advisor
Office of Patent Legal Administration
Office of the Deputy Commissioner
for Patent Examination Policy

Doc Code: PET.GREEN
Document Description: Petition for Green Tech Pilot

PTO/SB/420 (11-10)
Approved for use through 01/31/2011. OMB 0651-0062
U.S. Patent and Trademark Office; U. S. DEPARTMENT OF COMMERCE
Under the Paperwork Reduction Act of 1995, no persons are required to respond to a collection of information unless it displays a valid OMB control number.

PETITION TO MAKE SPECIAL UNDER THE GREEN TECHNOLOGY PILOT PROGRAM

Attorney Docket Number: 238145	Application Number (if known): 12/612170	Filing date: 2009-11-04
First Named Inventor: Ralf Jonczyk		
Title: SYSTEM AND METHOD FOR GROUNDING PHOTOVOLTAIC MODULES		

APPLICANT HEREBY REQUESTS TO PARTICIPATE IN THE GREEN TECHNOLOGY PILOT PROGRAM FOR THE ABOVE-IDENTIFIED APPLICATION. See Instruction Sheet on page 2.

This petition must be timely filed electronically using the USPTO electronic filing system, EFS-Web.

1. By filing this petition:

   Applicant is requesting early publication: Applicant hereby requests early publication under 37 CFR 1.219 and the publication fee set forth in 37 CFR 1.18(d) accompanies this request.

2. By filing this petition: applicant is agreeing to make an election without traverse in a telephonic interview and elect an invention that meets the eligibility requirements for the Green Technology Pilot Program, if the Office determines that the claims are not obviously directed to a single invention. See Instruction Sheet.

3. This request is accompanied by statements of special status for the eligibility requirement.

4. The application contains no more than three (3) independent claims and twenty (20) total claims.

5. The application does not contain any multiple dependent claims.

6. Other attachments: Statement Concerning the Basis for the Special Status

Signature /Allison W. Mages/	Date 2011-11-10
Name (Print/Typed) Allison W .Mages	Registration Number 57,275

Note: *Signatures of all the inventors or assignees of record of the entire interest or their representative(s) are required in accordance with 37 CFR 1.33 and 11.18. Please see 37 CFR 1.4(d) for the form of the signature. If necessary, submit multiple forms for more than one signature see below*.*

☐ *Total of ..... forms are submitted.

The information is required to obtain or retain a benefit by the public which is to file (and by the USPTO to process) an application. Confidentiality is governed by 35 U.S.C. 122 and 37 CFR 1.11 and 1.14. This collection is estimated to take 12 hours to complete, including gathering, preparing, and submitting the completed application form to the USPTO. Time will vary depending upon the individual case. Any comments on the amount of time you require to complete this form and/or suggestions for reducing this burden, should be sent to the Chief Information Officer, U.S. Patent and Trademark Office, U.S. Department of Commerce, P.O. Box 1450, Alexandria, VA 22313-1450. DO NOT SEND FEES OR COMPLETED FORMS TO THIS ADDRESS. **SEND TO: Commissioner for Patents, P.O. Box 1450, Alexandria, VA 22313-1450.**

If you need assistance in completing the form, call 1-800-PTO-9199 and select option 2.

PTO/SB/420 (11-10)
Approved for use through 01/31/2011. OMB 0651-0062
U.S. Patent and Trademark Office; U. S. DEPARTMENT OF COMMERCE
Under the Paperwork Reduction Act of 1995, no persons are required to respond to a collection of information unless it displays a valid OMB control number.

Instruction Sheet for Petition to Make Special Under the Green Technology Pilot Program

(Not to be Submitted to the USPTO)

The following is a summary of the requirements (for more information see the notices (i) "Pilot Program for Green Technologies Including Greenhouse Gas Reduction," (ii) "Elimination of Classification Requirement in the Green Technology Pilot Program," and (iii) "Expansion and Extension of the Green Technology Pilot Program," available on the USPTO web site at http://www.uspto.gov/patents/init_events/green_tech.jsp):

1) The application must be a non-reissue, non-provisional utility application filed under 35 U.S.C. 111 (a), or an international application that has entered the national stage in compliance with 35 U.S.C. 371, irrespective of the filing date of the application. Reexamination proceedings are excluded from this pilot program.

2) The application must contain three or fewer independent claims and twenty or fewer total claims. The application must not contain any multiple dependent claims. For an application that contains more than three independent claims or twenty total claims, or multiple dependent claims, applicant must file a preliminary amendment in compliance with 37 CFR 1.121 to cancel the excess claims and/or the multiple dependent claims at the time the petition to make special is filed.

3) The claims must be directed to a single invention that materially enhances the quality of the environment, or that materially contributes to: (1) the discovery or development of renewable energy resources; (2) the more efficient utilization and conservation of energy resources; or (3) green house gas emission reduction (see the eligibility requirements of sections II and III of the notice (i) cited above). The petition must include a statement that, if the USPTO determines that the claims are directed to multiple inventions (e.g., in a restriction requirement), applicant will agree to make an election without traverse in a telephonic interview, and elect an invention that meets the eligibility requirements in section II or III of the notice (i) cited above.

4) The petition to make special must be timely filed electronically using the USPTO electronic filing system, EFS-Web, and selecting the document description of "Petition for Green Tech Pilot" on the EFS-Web screen. Applicant should use form PTO/SB/420, which is available as a Portable Document Format (PDF) fillable form in EFS-Web and on the USPTO Web site.

5) The petition to make special must be filed at least one day prior to the date that a first Office action (which may be an Office action containing only a restriction requirement) appears in the Patent Application Information Retrieval (PAIR) system. Applicant may check the status of the application using PAIR.

6) The petition to make special must be accompanied by a request for early publication in compliance with 37 CFR 1.219 and the publication fee set forth in 37 CFR 1.18(d).

Privacy Act Statement

The **Privacy Act of 1974 (P.L. 93-579)** requires that you be given certain information in connection with your submission of the attached form related to a patent application or patent. Accordingly, pursuant to the requirements of the Act, please be advised that: (1) the general authority for the collection of this information is 35 U.S.C. 2(b)(2); (2) furnishing of the information solicited is voluntary; and (3) the principal purpose for which the information is used by the U.S. Patent and Trademark Office is to process and/or examine your submission related to a patent application or patent. If you do not furnish the requested information, the U.S. Patent and Trademark Office may not be able to process and/or examine your submission, which may result in termination of proceedings or abandonment of the application or expiration of the patent.

The information provided by you in this form will be subject to the following routine uses:

1. The information on this form will be treated confidentially to the extent allowed under the Freedom of Information Act (5 U.S.C. 552) and the Privacy Act (5 U.S.C 552a). Records from this system of records may be disclosed to the Department of Justice to determine whether disclosure of these records is required by the Freedom of Information Act.
2. A record from this system of records may be disclosed, as a routine use, in the course of presenting evidence to a court, magistrate, or administrative tribunal, including disclosures to opposing counsel in the course of settlement negotiations.
3. A record in this system of records may be disclosed, as a routine use, to a Member of Congress submitting a request involving an individual, to whom the record pertains, when the individual has requested assistance from the Member with respect to the subject matter of the record.
4. A record in this system of records may be disclosed, as a routine use, to a contractor of the Agency having need for the information in order to perform a contract. Recipients of information shall be required to comply with the requirements of the Privacy Act of 1974, as amended, pursuant to 5 U.S.C. 552a(m).
5. A record related to an International Application filed under the Patent Cooperation Treaty in this system of records may be disclosed, as a routine use, to the International Bureau of the World Intellectual Property Organization, pursuant to the Patent Cooperation Treaty.
6. A record in this system of records may be disclosed, as a routine use, to another federal agency for purposes of National Security review (35 U.S.C. 181) and for review pursuant to the Atomic Energy Act (42 U.S.C. 218(c)).
7. A record from this system of records may be disclosed, as a routine use, to the Administrator, General Services, or his/her designee, during an inspection of records conducted by GSA as part of that agency's responsibility to recommend improvements in records management practices and programs, under authority of 44 U.S.C. 2904 and 2906. Such disclosure shall be made in accordance with the GSA regulations governing inspection of records for this purpose, and any other relevant (*i.e.*, GSA or Commerce) directive. Such disclosure shall not be used to make determinations about individuals.
8. A record from this system of records may be disclosed, as a routine use, to the public after either publication of the application pursuant to 35 U.S.C. 122(b) or issuance of a patent pursuant to 35 U.S.C. 151. Further, a record may be disclosed, subject to the limitations of 37 CFR 1.14, as a routine use, to the public if the record was filed in an application which became abandoned or in which the proceedings were terminated and which application is referenced by either a published application, an application open to public inspection or an issued patent.
9. A record from this system of records may be disclosed, as a routine use, to a Federal, State, or local law enforcement agency, if the USPTO becomes aware of a violation or potential violation of law or regulation.

UNITED STATES PATENT AND TRADEMARK OFFICE

UNITED STATES DEPARTMENT OF COMMERCE
United States Patent and Trademark Office
Address: COMMISSIONER FOR PATENTS
P.O. Box 1450
Alexandria, Virginia 22313-1450
www.uspto.gov

APPLICATION NO.	FILING DATE	FIRST NAMED INVENTOR	ATTORNEY DOCKET NO.	CONFIRMATION NO.
12/612,170	11/04/2009	Ralf JONCZYK	238145/25229-0048	3884

77749 7590 11/17/2011

McNees Wallace & Nurick LLC
100 Pine Street
P.O. Box 1166
Harrisburg, PA 17108-1166

EXAMINER	
GARDNER, SHANNON M	
ART UNIT	PAPER NUMBER
1723	
MAIL DATE	DELIVERY MODE
11/17/2011	PAPER

Please find below and/or attached an Office communication concerning this application or proceeding.

The time period for reply, if any, is set in the attached communication.

UNITED STATES PATENT AND TRADEMARK OFFICE

Commissioner for Patents
United States Patent and Trademark Office
P.O. Box 1450
Alexandria, VA 22313-1450
www.uspto.gov

11/17/2011

McNees Wallace & Nurick LLC
100 Pine Street
P.O. Box 1166
Harrisburg PA 17108-1166

In re Application of	:	
Jonczyk	:	DECISION ON PETITION
Application No. 12/612,170	:	TO MAKE SPECIAL UNDER
Filed: 11/04/2009	:	THE GREEN TECHNOLOGY
Attorney Docket No. **238145/25229-0048**	:	PILOT PROGRAM

This is a decision on the petition under 37 CFR 1.102, filed 11/10/2011, to make the above-identified application special under the pilot program for applications pertaining to Green Technologies as set forth in 74 Federal Register Notice 64666 (December 8, 2009) and amended by 75 Federal Register Notice 28554 (May 21, 2010) and 75 Federal Register Notice 69049 (November 10, 2010).

The petition is **GRANTED**.

A grantable petition to make an application special under 37 CFR 1.102 and the pilot program as set forth in 74 FR 64666 must be directed to a nonprovisional application filed under 35 USC 111(a) or be a national stage entry under 35 USC 371, exclusive of any reissue applications.

In order to qualify for special status, the following requirements must be met. 1) The application must have no more than 3 independent claims and no more than 20 total claims. 2) The application must not contain any multiple dependent claims. 3) The petition must state the basis for seeking special status, i.e., the claimed invention either: A) materially enhances the quality of the environment or B) materially contributes to: i) the discovery or development of renewable energy resources, ii) the more efficient utilization and conservation of energy resources, or iii) greenhouse gas emission reduction. 4) If the disclosure is not clear on its face that the claimed invention materially contributes under category (A) or (B), the petition must be accompanied by a statement by the applicant, assignee, or an attorney/agent registered to practice before the Office explaining how the materiality standard is met. 5) A statement that applicant will agree to make an election without traverse in a telephonic interview if a restriction requirement is made by the examiner. 6) The petition to make special must be filed electronically. 7) The petition must be filed at least one day prior to the date that a first Office Action appears in the Patent Application Information Retrieval (PAIR) system. 8) The petition must be accompanied by a

request for early publication in compliance with 37 CFR 1.219 and include the publication fee as set forth in 37 CFR 1.18(d).

The requirement for a fee for consideration of the petition to make special for applications pertaining to Green Technologies has been waived.

The instant petition complies with items 1 – 8 above. Accordingly, the above-identified application has been accorded "special" status.

Telephone inquires concerning this decision should be directed to Tom Dunn at 571-272-1171.

The application is being forwarded to the Technology Center Art Unit 1723 for action on the merits commensurate with this decision.

/Tom Dunn/

Tom Dunn
Quality Assurance Specialist
Technology Center 1700

UNITED STATES PATENT AND TRADEMARK OFFICE

UNITED STATES DEPARTMENT OF COMMERCE
United States Patent and Trademark Office
Address: COMMISSIONER FOR PATENTS
P.O. Box 1450
Alexandria, Virginia 22313-1450
www.uspto.gov

APPLICATION NO.	FILING DATE	FIRST NAMED INVENTOR	ATTORNEY DOCKET NO.	CONFIRMATION NO.
12/612,220	11/04/2009	Atsushi SHIMURA	01-1940	3978

23400 7590 11/08/2011

POSZ LAW GROUP, PLC
12040 SOUTH LAKES DRIVE
SUITE 101
RESTON, VA 20191

EXAMINER	
DOLLINGER, TONIA LYNN MEONSKE	
ART UNIT	**PAPER NUMBER**
2443	

NOTIFICATION DATE	DELIVERY MODE
11/08/2011	ELECTRONIC

Please find below and/or attached an Office communication concerning this application or proceeding.

The time period for reply, if any, is set in the attached communication.

Notice of the Office communication was sent electronically on above-indicated "Notification Date" to the following e-mail address(es):

mailbox@poszlaw.com
lwebbers@poszlaw.com
dposz@poszlaw.com

UNITED STATES PATENT AND TRADEMARK OFFICE

MAILED

NOV 08 2011

DIRECTOR OFFICE
TECHNOLOGY CENTER 2400

Commissioner for Patents
United States Patent and Trademark Office
P.O. Box 1450
Alexandria, VA 22313-1450
www.uspto.gov

POSZ LAW GROUP, PLC
12040 SOUTH LAKES DRIVE
SUITE 101
RESTON VA 20191

In re Application of: Atsushi Shimura
Application No. 12/612, 220
Filed: November 4, 2009
For: IMAGE SHOOTING DEVICE AND METHOD FOR SHOOTING IMAGE

DECISION ON REQUEST TO PARTICIPATE IN PATENT PROSECUTION HIGHWAY PROGRAM AND PETITION TO MAKE SPECIAL UNDER 37 CFR 1.102(a)

This is a decision on the request to participate in the Patent Prosecution Highway (PPH) program and the petition under 37 CFR 1.102(a), filed September 30, 2011, to make the above-identified application special.

The petition is **GRANTED.**

A grantable request to participate in the PPH program and petition to make special require:

1. The U.S. application for which participation in the PPH program is requested and the corresponding JPO application must have the same priority/filing date; In particular, the U.S. application (including national stage entry of a PCT application and a so-called bypass application filed under 35 U.S.C. § 111(a) which validly claims benefit under 35 U.S.C. § 120 to a PCT application):

   (a) is an application that validly claims priority under 35 U.S.C. § 119(a) and 37 CFR 1.55 to one or more applications filed with JPO,

   or

   (b) is an application which is the basis of a valid priority claim under the Paris Convention for the application filed in JPO,

   or

   (c) is an application which shares a common priority document with the application filed in JPO,

   or

   (d) and the JPO application are derived from/related to a PCT application having no priority claim.

2. Applicant must submit a copy of:
    a. The allowable/patentable claim(s) from the JPO application(s);
    b. An English translation of the allowable/patentable claim(s); and
    c. A statement that the English translation is accurate;

3. Applicant must
    a. Ensure all the claims in the U.S. application must sufficiently correspond or be amended to sufficiently correspond to one or more of those claims indicated as allowable/patentable claim(s) in the JPO application(s). Claims are considered to "sufficiently correspond" where, accounting for differences due to translations and claim format, the claims in the USPTO are of the same or similar scope as the claims in the JPO, or the claims in the USPTO are narrower in scope than the claims in the JPO. In this regard, a claim that is narrower in scope occurs when a JPO claim is amended to be further limited by an additional feature that is supported in the specification (description and/or claims). A claim in the USPTO which introduces a new/different category of claims to those claims indicated as allowable in the JPO is not considered to sufficiently correspond. For example, if the JPO claims only contain claims to a process of manufacturing a product, then the claims in the USPTO are not considered to sufficiently correspond if the USPTO claims introduce product claims that are dependent on the corresponding process claims; and

    b. Submit a claims correspondence table in English;

4. Examination of the U.S. application has not begun;

5. Applicant must submit:
    a. Documentation of prior office action:
        i. a copy of the office action(s) just prior to the "Decision to Grant a Patent" from each of the JPO application(s) containing the allowable/patentable claim(s) or
        ii. if the allowable/patentable claims(s) are from a "Notification of Reasons for Refusal" then the Notification of Reasons for Refusal or
        iii. if the JPO application is a first action allowance then no office action from the JPO is necessary should be indicated on the request/petition form;
    b. An English language translation of the JPO Office action from (5)(a)(i)-(ii) above
    c. A statement that the English translation is accurate (if the translation is not a machine translation provided by the JPO);

6. Applicant must submit:
    a. An IDS listing the documents cited by the JPO examiner in the JPO office action (unless already submitted in this application)
    b. Copies of the documents except U.S. patents or U.S. patent application publications (unless already submitted in this application).

The request to participate in the PPH program and petition are found to comply with the above requirements. Accordingly, the above-identified application has been accorded "special" status.

Telephone inquiries concerning this decision should be directed to Christopher Grant at 571-272-7294.

All other inquiries concerning the examination or status of the application is accessible in the PAIR system at http://www.uspto.gov/ebc/index.html.

The application is being forwarded to the examiner for action on the merits commensurate with this decision.

/Christopher Grant/
Christopher Grant
Quality Assurance Specialist
Technology Center 2400

UNITED STATES PATENT AND TRADEMARK OFFICE

Commissioner for Patents
United States Patent and Trademark Office
P.O. Box 1450
Alexandria, VA 22313-1450
www.uspto.gov

GENERAL ELECTRIC COMPANY
GLOBAL PATENT OPERATION-AVIATION
2 CORPORATE DRIVE
STE 648
SHELTON CT 06484

MAILED

DEC 27 2010

OFFICE OF PETITIONS

In re Application of :
Roy L. STONE, et al :
Application No. 12/612,349 : DECISION ON PETITION
Filed: November 4, 2009 :
Attorney Docket No. 233986-2 :

This is a decision on the renewed petition under the unintentional provisions of 37 CFR 1.137(b), filed November 29, 2010, to revive the above-identified application.

The petition is **GRANTED**.

The application became abandoned for failure to reply in a timely manner to the Notice to File Missing Parts of Nonprovisional Application (Notice), mailed November 19, 2009. The Notice set a period for reply of **two (2) months** from the mail date of the Notice. Two extensions of time under the provisions of 37 CFR 1.136(a) were obtained. Accordingly, the application became abandoned on January 20, 2010.

The petition satisfies the requirements of 37 CFR 1.137(b) in that petitioner has supplied (1) the reply in the form of a properly signed declaration and required fees; (2) the petition fee of $1620; and (3) the required statement of unintentional delay.

The application file does not indicate a change of address has been filed in this case, although the address given on the petition differs from the address of record. A change of address should be filed in this case in accordance with MPEP 601.03. A courtesy copy of this decision is being mailed to the address noted on the petition. However, until otherwise instructed, all future correspondence regarding this application will be mailed solely to the address of record.

Telephone inquiries concerning this decision should be directed to the undersigned at (571) 272-6735.

All other inquiries should be directed to the Office of Data Management at (571) 272-4000.

This application is being referred to the Office of Data Management for further pre-examination processing.

/DCG/
Diane C. Goodwyn
Petitions Examiner
Office of Petitions

Cc: WILLIAM SCOTT ANDES
ONE NEUMAN WAY, MD F16
CINCINNATI, OH 45215

UNITED STATES PATENT AND TRADEMARK OFFICE

Commissioner for Patents
United States Patent and Trademark Office
P.O. Box 1450
Alexandria, VA 22313-1450
www.uspto.gov

GENERAL ELECTRIC COMPANY
Global Patent Operation-Aviation
2 Corporate Drive
STE 648
Shelton CT 06484

MAILED

JAN 25 2011

OFFICE OF PETITIONS

In re Application of :
Stone, et al. :
Application No. 12/612,355 : ON PETITION
Filed: November 4, 2009 :
Attorney Docket No. 233986-3 :
For: METHOD OF WASHING A GAS TURBINE ENGINE

This is a decision on the petition under 37 CFR 1.137(b), filed November 29, 2010, to revive the above-identified application.

The petition under 37 CFR 1.137(b) is **GRANTED**.

This application became abandoned for failure to timely reply to the Notice to File Missing Parts of Nonprovisional Application, mailed November 20, 2009, which set a two month shortened statutory period for reply. No extensions of time having been obtained pursuant to 37 CFR 1.136(a) and no reply being received in the Office, this application became abandoned on January 21, 2010. A Notice of Abandonment was mailed on July 29, 2010.

Applicants have submitted a proper reply to the November 29, 2009 Notice in the form of an executed declaration and $130.00 surcharge, an acceptable statement of the unintentional nature of the delay in responding to the November 29,2 009 Notice, and the $1,620.00 petition fee. Accordingly, the petition under 37 CFR 1.137(b) is granted.

The file does not indicate a change of address has been submitted, although the address given on the petition differs from the address of record. If appropriate, a change of address should be filed in accordance with MPEP 601.03. A courtesy copy of this decision is being mailed to the address given on the petition; however, the Office will mail all future correspondence solely to the address of record.

After the mailing of this decision, the file will be returned to the Office of Patent Application Processing for further pre-examination processing.

Telephone inquiries concerning this matter may be directed to the undersigned at (571) 272-3230.

Shirene Willis Brantley
Senior Petitions Attorney
Office of Petitions

CC: WILLIAM SCOTT ANDES
ONE NEUMAN WAY, MD F16
CINCINNATI OH 45215

Doc Code: PET.GREEN
Document Description: Petition for Green Tech Pilot

PTO/SB/420 (05-10)
Approved for use through 05/31/2010. OMB 0651-0062
U.S. Patent and Trademark Office; U. S. DEPARTMENT OF COMMERCE
Under the Paperwork Reduction Act of 1995, no persons are required to respond to a collection of information unless it displays a valid OMB control number.

PETITION TO MAKE SPECIAL UNDER THE GREEN TECHNOLOGY PILOT PROGRAM

Attorney Docket Number: ID0076USG	Application Number (if known): 12/612,378	Filing date: November 4, 2009

First Named Inventor: Robert Bartek

Title: BIOMASS CONVERSION PROCESS

APPLICANT HEREBY REQUESTS TO PARTICIPATE IN THE GREEN TECHNOLOGY PILOT PROGRAM FOR THE ABOVE-IDENTIFIED APPLICATION. **See Instruction Sheet on page 2.**

This petition must be timely filed electronically using the USPTO electronic filing system, EFS-Web.

1. By filing this petition:

   Applicant is requesting early publication: Applicant hereby requests early publication under 37 CFR 1.219 and the publication fee set forth in 37 CFR 1.18(d) accompanies this request.

2. By filing this petition: applicant is agreeing to make an election without traverse in a telephonic interview and elect an invention that meets the eligibility requirements set forth in the notice titled "Pilot Program for Green Technologies Including Greenhouse Gas Reduction," as modified by the notice titled "Elimination of Classification Requirement in the Green Technology Pilot Program," each of which was published in the Federal Register, if the Office determines that the claims are not obviously directed to a single invention.

3. This request is accompanied by statements of special status for the eligibility requirement.

4. The application contains no more than three (3) independent claims and twenty (20) total claims.

5. The application does not contain any multiple dependent claims.

6. Other attachments: Statement of Special Status and Preliminary Amendment

Signature /jra/	Date January 25, 2011
Name (Print/Typed) Jeffrey R. Anderson	Registration Number 42,263

Note: *Signatures of all the inventors or assignees of record of the entire interest or their representative(s) are required in accordance with 37 CFR 1.33 and 11.18. Please see 37 CFR 1.4(d) for the form of the signature. If necessary, submit multiple forms for more than one signature, see below*.*

☐ *Total of _____ forms are submitted.

The information is required to obtain or retain a benefit by the public which is to file (and by the USPTO to process) an application. Confidentiality is governed by 35 U.S.C. 122 and 37 CFR 1.11 and 1.14. This collection is estimated to take 12 hours to complete, including gathering, preparing, and submitting the completed application form to the USPTO. Time will vary depending upon the individual case. Any comments on the amount of time you require to complete this form and/or suggestions for reducing this burden, should be sent to the Chief Information Officer, U.S. Patent and Trademark Office, U.S. Department of Commerce, P.O. Box 1450, Alexandria, VA 22313-1450. DO NOT SEND FEES OR COMPLETED FORMS TO THIS ADDRESS. **SEND TO: Commissioner for Patents, P.O. Box 1450, Alexandria, VA 22313-1450.**

If you need assistance in completing the form, call 1-800-PTO-9199 and select option 2.

PTO/SB/420 (05-10)
Approved for use through 05/31/2010. OMB 0651-0062
U.S. Patent and Trademark Office; U. S. DEPARTMENT OF COMMERCE
Under the Paperwork Reduction Act of 1995, no persons are required to respond to a collection of information unless it displays a valid OMB control number.

Instruction Sheet for
Petition to Make Special Under the Green Technology Pilot Program

(Not to be Submitted to the USPTO)

***The following is a summary of the requirements** (for more information see the notices (i) "Pilot Program for Green Technologies Including Greenhouse Gas Reduction" and (ii) "Elimination of Classification Requirement in the Green Technology Pilot Program," available on the USPTO web site at http://www.uspto.gov/patents/init_events/green_tech.jsp):*

(1) The application must be a non-reissue, non-provisional utility application filed under 35 U.S.C. 111(a), or an international application that has entered the national stage in compliance with 35 U.S.C. 371. The application must be previously filed before the publication date of the notice cited above. Reexamination proceedings are excluded from this pilot program.

(2) The application must contain three or fewer independent claims and twenty or fewer total claims. The application must not contain any multiple dependent claims. For an application that contains more than three independent claims or twenty total claims, or multiple dependent claims, applicant must file a preliminary amendment in compliance with 37 CFR 1.121 to cancel the excess claims and/or the multiple dependent claims at the time the petition to make special is filed.

(3) The claims must be directed to a single invention that materially enhances the quality of the environment, or that materially contributes to: (1) the discovery or development of renewable energy resources; (2) the more efficient utilization and conservation of energy resources; or (3) green house gas emission reduction (see the eligibility requirements of sections II and III of the notice (i) cited above). The petition must include a statement that, if the USPTO determines that the claims are directed to multiple inventions (e.g., in a restriction requirement), applicant will agree to make an election without traverse in a telephonic interview, and elect an invention that meets the eligibility requirements in section II or III of the notice (i) cited above.

(4) The petition to make special must be timely filed electronically using the USPTO electronic filing system, EFS-Web, and selecting the document description of "Petition for Green Tech Pilot" on the EFS-Web screen. Applicant should use form PTO/SB/420, which is available as a Portable Document Format (PDF) fillable form in EFS-Web and on the USPTO Web site.

(5) The petition to make special must be filed at least one day prior to the date that a first Office action (which may be an Office action containing only a restriction requirement) appears in the Patent Application Information Retrieval (PAIR) system. Applicant may check the status of the application using PAIR.

(6) The petition to make special must be accompanied by a request for early publication in compliance with 37 CFR 1.219 and the publication fee set forth in 37 CFR 1.18(d).

Privacy Act Statement

The **Privacy Act of 1974 (P.L. 93-579)** requires that you be given certain information in connection with your submission of the attached form related to a patent application or patent. Accordingly, pursuant to the requirements of the Act, please be advised that: (1) the general authority for the collection of this information is 35 U.S.C. 2(b)(2); (2) furnishing of the information solicited is voluntary; and (3) the principal purpose for which the information is used by the U.S. Patent and Trademark Office is to process and/or examine your submission related to a patent application or patent. If you do not furnish the requested information, the U.S. Patent and Trademark Office may not be able to process and/or examine your submission, which may result in termination of proceedings or abandonment of the application or expiration of the patent.

The information provided by you in this form will be subject to the following routine uses:

1. The information on this form will be treated confidentially to the extent allowed under the Freedom of Information Act (5 U.S.C. 552) and the Privacy Act (5 U.S.C 552a). Records from this system of records may be disclosed to the Department of Justice to determine whether disclosure of these records is required by the Freedom of Information Act.
2. A record from this system of records may be disclosed, as a routine use, in the course of presenting evidence to a court, magistrate, or administrative tribunal, including disclosures to opposing counsel in the course of settlement negotiations.
3. A record in this system of records may be disclosed, as a routine use, to a Member of Congress submitting a request involving an individual, to whom the record pertains, when the individual has requested assistance from the Member with respect to the subject matter of the record.
4. A record in this system of records may be disclosed, as a routine use, to a contractor of the Agency having need for the information in order to perform a contract. Recipients of information shall be required to comply with the requirements of the Privacy Act of 1974, as amended, pursuant to 5 U.S.C. 552a(m).
5. A record related to an International Application filed under the Patent Cooperation Treaty in this system of records may be disclosed, as a routine use, to the International Bureau of the World Intellectual Property Organization, pursuant to the Patent Cooperation Treaty.
6. A record in this system of records may be disclosed, as a routine use, to another federal agency for purposes of National Security review (35 U.S.C. 181) and for review pursuant to the Atomic Energy Act (42 U.S.C. 218(c)).
7. A record from this system of records may be disclosed, as a routine use, to the Administrator, General Services, or his/her designee, during an inspection of records conducted by GSA as part of that agency's responsibility to recommend improvements in records management practices and programs, under authority of 44 U.S.C. 2904 and 2906. Such disclosure shall be made in accordance with the GSA regulations governing inspection of records for this purpose, and any other relevant (*i.e.*, GSA or Commerce) directive. Such disclosure shall not be used to make determinations about individuals.
8. A record from this system of records may be disclosed, as a routine use, to the public after either publication of the application pursuant to 35 U.S.C. 122(b) or issuance of a patent pursuant to 35 U.S.C. 151. Further, a record may be disclosed, subject to the limitations of 37 CFR 1.14, as a routine use, to the public if the record was filed in an application which became abandoned or in which the proceedings were terminated and which application is referenced by either a published application, an application open to public inspection or an issued patent.
9. A record from this system of records may be disclosed, as a routine use, to a Federal, State, or local law enforcement agency, if the USPTO becomes aware of a violation or potential violation of law or regulation.

UNITED STATES PATENT AND TRADEMARK OFFICE

UNITED STATES DEPARTMENT OF COMMERCE
United States Patent and Trademark Office
Address: COMMISSIONER FOR PATENTS
P.O. Box 1450
Alexandria, Virginia 22313-1450
www.uspto.gov

APPLICATION NO.	FILING DATE	FIRST NAMED INVENTOR	ATTORNEY DOCKET NO.	CONFIRMATION NO.
12/612,378	11/04/2009	Robert Bartek	ID0076US	4280

90394 7590 02/04/2011

Kior Inc.
13001 Bay Park Rd.
Pasadena, TX 77507

EXAMINER	
BHAT, NINA NMN	
ART UNIT	PAPER NUMBER
1771	
MAIL DATE	DELIVERY MODE
02/04/2011	PAPER

Please find below and/or attached an Office communication concerning this application or proceeding.

The time period for reply, if any, is set in the attached communication.

UNITED STATES PATENT AND TRADEMARK OFFICE

Commissioner for Patents
United States Patent and Trademark Office
P.O. Box 1450
Alexandria, VA 22313-1450
www.uspto.gov

2/4/2011

Kior Inc.
13001 Bay Park Rd.
Pasadena TX 77507

In re Application of	:	
Robert Bartek et al.	:	DECISION ON PETITION
Application No. 12/612,378	:	TO MAKE SPECIAL UNDER
Filed: November 04, 2009	:	THE GREEN TECHNOLOGY
Attorney Docket No. ID0076US	:	PILOT PROGRAM

This is a decision on the petition under 37 CFR 1.102, filed January 25, 2011, to make the above-identified application special under the pilot program for applications pertaining to Green Technologies as set forth in 74 Federal Register Notice 64666 (December 8, 2009) and amended by 75 Federal Register Notice 28554 (May 21, 2010) and 75 Federal Register Notice 69049 (November 10, 2010).

The petition is **GRANTED**.

A grantable petition to make an application special under 37 CFR 1.102 and the pilot program as set forth in 74 FR 64666 must be directed to a nonprovisional application filed under 35 USC 111(a) or be a national stage entry under 35 USC 371, exclusive of any reissue applications.

In order to qualify for special status, the following requirements must be met. 1) The application must have no more than 3 independent claims and no more than 20 total claims. 2) The application must not contain any multiple dependent claims. 3) The petition must state the basis for seeking special status, i.e., the claimed invention either: A) materially enhances the quality of the environment or B) materially contributes to: i) the discovery or development of renewable energy resources, ii) the more efficient utilization and conservation of energy resources, or iii) greenhouse gas emission reduction. 4) If the disclosure is not clear on its face that the claimed invention materially contributes under category (A) or (B), the petition must be accompanied by a statement by the applicant, assignee, or an attorney/agent registered to practice before the Office explaining how the materiality standard is met. 5) A statement that applicant will agree to make an election without traverse in a telephonic interview if a restriction requirement is made by the examiner. 6) The petition to make special must be filed electronically. 7) The petition must be filed at least one day prior to the date that a first Office Action appears in the Patent Application Information Retrieval (PAIR) system. 8) The petition must be accompanied by a request for early publication in compliance with 37 CFR 1.219 and include the publication fee as set forth in 37 CFR 1.18(d).

The requirement for a fee for consideration of the petition to make special for applications pertaining to Green Technologies has been waived.

The instant petition complies with items 1 – 8 above. Accordingly, the above-identified application has been accorded "special" status.

Telephone inquires concerning this decision should be directed to Blaine Copenheaver at 571-272-1156.

The application is being forwarded to the examiner for action on the merits commensurate with this decision.

/Blaine Copenheaver/

Blaine Copenheaver
Quality Assurance Specialist
Technology Center 1700

Doc Code: PPH.PCT.652
Document Description: Petition to make special under PCT-Patent Pros Hwy

PTO/SB/20PCT-KR (06-10)
Approved for use through 01/31/2012. OMB 0651-0058
U.S. Patent and Trademark Office; U. S. DEPARTMENT OF COMMERCE
Under the Paperwork Reduction Act of 1995, no persons are required to respond to a collection of information unless it displays a valid OMB control number.

REQUEST FOR PARTICIPATION IN THE PATENT COOPERATION TREATY - PATENT PROSECUTION HIGHWAY (PCT-PPH) PILOT PROGRAM BETWEEN THE KOREAN INTELLECTUAL PROPERTY OFFICE (KIPO) AND THE USPTO

Application No:	12/612,428	Filing date:	11/04/2009
First Named Inventor:	Jeffrey Paynter		
Title of the Invention:	Anti-rotation Coaxial Connector		

THIS REQUEST FOR PARTICIPATION IN THE PCT-PPH PILOT PROGRAM ALONG WITH THE REQUIRED DOCUMENTS MUST BE SUBMITTED VIA EFS-WEB. INFORMATION REGARDING EFS-WEB IS AVAILABLE AT HTTP://WWW.USPTO.GOV/EBC/EFS_HELP.HTML

APPLICANT HEREBY REQUESTS PARTICIPATION IN THE PCT-PPH PROGRAM AND PETITIONS TO MAKE THE ABOVE-IDENTIFIED APPLICATION SPECIAL UNDER THE PCT-PPH PROGRAM.

The above-identified application is (1) a national stage entry of the corresponding PCT application, or (2) a national stage entry of another PCT application which claims priority to the corresponding PCT application, or (3) a national application that claims domestic/ foreign priority to the corresponding PCT application, or (4) a national application which forms the basis for the priority claim in the corresponding PCT application, or (5) a continuing application of a U.S. application that satisfies one of (1) to (4) above, or (6) a U.S. application that claims domestic benefit to a U.S. provisional application which forms the basis for the priority claim in the corresponding PCT application.

The corresponding PCT application number(s) is/are: PCT/US09/63320

The international date of the corresponding PCT application(s) is/are: 11/04/2009

I. List of Required Documents:

a. **A copy of the latest international work product (WO/ISA, WO/IPEA, or IPER) in the above–identified corresponding PCT application(s)**

☑ Is attached.

☐ Is not attached because the document is already in the U.S. application.

b. **A copy of all claims which were indicated as having novelty, inventive step and industrial applicability in the above-identified corresponding PCT application(s).**

☑ Is attached.

☐ Is not attached because the document is already in the U.S. application.

c. **English translations of the documents in a. and b. above are attached (if the documents are not in the English language). A statement that the English translation is accurate is attached for the document in b. above.**

This collection of information is required by 35 U.S.C. 119, 37 CFR 1.55, and 37 CFR 1.102(d). The information is required to obtain or retain a benefit by the public, which is to file (and by the USPTO to process) an application. Confidentiality is governed by 35 U.S.C. 122 and 37 CFR 1.11 and 1.14. This collection is estimated to take 2 hours to complete, including gathering, preparing, and submitting the completed application form to the USPTO. Time will vary depending upon the individual case. Any comments on the amount of time you require to complete this form and/or suggestions for reducing this burden should be sent to the Chief Information Officer, U.S. Patent and Trademark Office, U.S. Department of Commerce, P.O. Box 1450, Alexandria, VA 22313-1450. DO NOT SEND FEES OR COMPLETED FORMS TO THIS ADDRESS.

PTO/SB/20PCT-KR (06-10)
Approved for use through 01/31/2012. OMB 0651-0058
U.S.Patent and Trademark Office; U.S. DEPARTMENT OF COMMERCE
Under the Paperwork Reduction Act of 1995, no persons are required to respond to a collection of information unless it displays a valid OMB control number.

REQUEST FOR PARTICIPATION IN THE PCT-PPH PILOT PROGRAM BETWEEN THE KIPO AND THE USPTO

(continued)

Application No.:	12/612,428
First Named Inventor:	Jeffrey Paynter

d. **(1) An information disclosure statement listing the documents cited in the international work products (ISR, WO/ISA, WO/IPEA, IPER) of the corresponding PCT application.**

☑ Is attached

☐ Has already been filed in the above-identified U.S. application on _____

(2) Copies of all documents (except) for U.S. patents or U.S. patent application publications)

☑ Are attached.

Have already been filed in the above-identified U.S. application on _____

II. Claims Correspondence Table:

Claims in US Application	Patentable Claims in the corresponding PCT Application	Explanation regarding the correspondence
1	1	direct
2	2	direct
3	3	direct
4	4	direct
5	5	direct
6	6	direct
7	7	direct
8	8	direct
9	9	direct
10	10	direct
11	11	direct
12	12	direct
13	13	direct
14	14	direct
15	15	direct
16	16	direct
17	17	direct
18	18	direct
19	19	direct

III. All the claims in the US application sufficiently correspond to the patentable claims in the corresponding PCT application.

Signature /Andrew Babcock, Reg. #44517/	Date 10/20/2010
Name (Print/Typed) Andrew Babcock	Registration Number 44517

Privacy Act Statement

The **Privacy Act of 1974 (P.L. 93-579)** requires that you be given certain information in connection with your submission of the attached form related to a patent application or patent. Accordingly, pursuant to the requirements of the Act, please be advised that: (1) the general authority for the collection of this information is 35 U.S.C. 2(b)(2); (2) furnishing of the information solicited is voluntary; and (3) the principal purpose for which the information is used by the U.S. Patent and Trademark Office is to process and/or examine your submission related to a patent application or patent. If you do not furnish the requested information, the U.S. Patent and Trademark Office may not be able to process and/or examine your submission, which may result in termination of proceedings or abandonment of the application or expiration of the patent.

The information provided by you in this form will be subject to the following routine uses:

1. The information on this form will be treated confidentially to the extent allowed under the Freedom of Information Act (5 U.S.C. 552) and the Privacy Act (5 U.S.C 552a). Records from this system of records may be disclosed to the Department of Justice to determine whether disclosure of these records is required by the Freedom of Information Act.
2. A record from this system of records may be disclosed, as a routine use, in the course of presenting evidence to a court, magistrate, or administrative tribunal, including disclosures to opposing counsel in the course of settlement negotiations.
3. A record in this system of records may be disclosed, as a routine use, to a Member of Congress submitting a request involving an individual, to whom the record pertains, when the individual has requested assistance from the Member with respect to the subject matter of the record.
4. A record in this system of records may be disclosed, as a routine use, to a contractor of the Agency having need for the information in order to perform a contract. Recipients of information shall be required to comply with the requirements of the Privacy Act of 1974, as amended, pursuant to 5 U.S.C. 552a(m).
5. A record related to an International Application filed under the Patent Cooperation Treaty in this system of records may be disclosed, as a routine use, to the International Bureau of the World Intellectual Property Organization, pursuant to the Patent Cooperation Treaty.
6. A record in this system of records may be disclosed, as a routine use, to another federal agency for purposes of National Security review (35 U.S.C. 181) and for review pursuant to the Atomic Energy Act (42 U.S.C. 218(c)).
7. A record from this system of records may be disclosed, as a routine use, to the Administrator, General Services, or his/her designee, during an inspection of records conducted by GSA as part of that agency's responsibility to recommend improvements in records management practices and programs, under authority of 44 U.S.C. 2904 and 2906. Such disclosure shall be made in accordance with the GSA regulations governing inspection of records for this purpose, and any other relevant (*i.e.*, GSA or Commerce) directive. Such disclosure shall not be used to make determinations about individuals.
8. A record from this system of records may be disclosed, as a routine use, to the public after either publication of the application pursuant to 35 U.S.C. 122(b) or issuance of a patent pursuant to 35 U.S.C. 151. Further, a record may be disclosed, subject to the limitations of 37 CFR 1.14, as a routine use, to the public if the record was filed in an application which became abandoned or in which the proceedings were terminated and which application is referenced by either a published application, an application open to public inspection or an issued patent.
9. A record from this system of records may be disclosed, as a routine use, to a Federal, State, or local law enforcement agency, if the USPTO becomes aware of a violation or potential violation of law or regulation.

UNITED STATES PATENT AND TRADEMARK OFFICE

UNITED STATES DEPARTMENT OF COMMERCE
United States Patent and Trademark Office
Address: COMMISSIONER FOR PATENTS
P.O. Box 1450
Alexandria, Virginia 22313-1450
www.uspto.gov

APPLICATION NO.	FILING DATE	FIRST NAMED INVENTOR	ATTORNEY DOCKET NO.	CONFIRMATION NO.
12/612,428	11/04/2009	Jeffrey Paynter	8100	4377

78847 7590 11/16/2010

Babcock IP, PLLC
P.O. Box 488
Bridgman, MI 49106

EXAMINER	
GIRARDI, VANESSA MARY	
ART UNIT	**PAPER NUMBER**
2833	
MAIL DATE	**DELIVERY MODE**
11/16/2010	PAPER

Please find below and/or attached an Office communication concerning this application or proceeding.

The time period for reply, if any, is set in the attached communication.

UNITED STATES PATENT AND TRADEMARK OFFICE

Commissioner for Patents
United States Patent and Trademark Office
P.O. Box 1450
Alexandria, VA 22313-1450
www.uspto.gov

Babcock IP, PLLC
P.O. Box 488
Bridgman MI 49106

In re Application of
PAYNTER et al.
Application No.: 12/612,428
Filed: 04 November 2009
Attorney Docket No.: 8100
For: ANTI-ROTATION COAXIAL CONNECTOR

: DECISION ON REQUEST TO
: PARTICIPATE IN THE PCT PATENT
: PROSECUTION HIGHWAY PILOT
: PROGRAM AND PETITION
: TO MAKE SPECIAL UNDER
: 37 CFR 1.102(d)

This is a decision on the request to participate in the PCT Patent Prosecution Highway (PCT-PPH) pilot program and the petition under 37 CFR 1.102(a), filed 20 October 2010, to make the above-identified application special.

The request and petition are **GRANTED**.

Discussion

A grantable request to participate in the PCT-PPH pilot program and petition to make special require:

(1) The U.S. application must disclose an eligible relationship to one or more PCT applications where the ISA or IPEA are the JPO, EPO, KIPO, or USPTO;

(2) At least one claim in the PCT application has novelty, inventive step, and industrial applicability and must be free of any observations in Box VIII in the latest work product in the international stage or applicant must identify and explain why the claim(s) is/are not subject to the observation in Box VIII;

(3) Applicant must submit a copy of the claim(s) from the PCT application(s) that have novelty, inventive step, and industrial applicability along with an English translation thereof and a statement that the English translation is accurate, if the claims are not in the English language;

(4) All the claims in the U.S. application must sufficiently correspond or be amended to sufficiently correspond to the claim(s) that have novelty, inventive step, and industrial applicability in the PCT application(s);

(5) Examination of the U.S. application has not begun;

(6) Applicant must submit a copy of the latest international work product from the PCT application indicating that the claim(s) have novelty, inventive step, and industrial applicability along with an English translation thereof and a statement that the English translation is accurate

if the latest international work product is not in the English language;

(7) Applicant must submit an IDS listing the documents cited by the PCT examiner in the international work product along with copies of documents except U.S. patents or U.S. patent application publications.

The request to participate in the PCT-PPH pilot program and petition comply with the above requirements. Accordingly, the above-identified application has been accorded "special" status.

Telephone inquiries concerning this decision should be directed to Lee W. Young at 571-272-4549.

All other inquiries concerning the examination or status of the application is accessible in the PAIR system at http://www.uspto.gov/ebc.index.html.

This application will be forwarded to the examiner for action on the merits commensurate with this decision once this application's formality reviews have been completed.

Lee W. Young
TQAS Technology Center 2800 - Semiconductors,
Electrical & Optical Systems & Components

UNITED STATES PATENT AND TRADEMARK OFFICE

UNITED STATES DEPARTMENT OF COMMERCE
United States Patent and Trademark Office
Address: COMMISSIONER FOR PATENTS
P.O. Box 1450
Alexandria, Virginia 22313-1450
www.uspto.gov

APPLICATION NO.	FILING DATE	FIRST NAMED INVENTOR	ATTORNEY DOCKET NO.	CONFIRMATION NO.
12/612,518	11/04/2009	Steven H. Jury	2213.2016-005	4578

21005 7590 01/11/2011
HAMILTON, BROOK, SMITH & REYNOLDS, P.C.
530 VIRGINIA ROAD
P.O. BOX 9133
CONCORD, MA 01742-9133

EXAMINER	
ABBOTT, YVONNE RENEE	
ART UNIT	PAPER NUMBER
3644	
MAIL DATE	DELIVERY MODE
01/11/2011	PAPER

Please find below and/or attached an Office communication concerning this application or proceeding.

The time period for reply, if any, is set in the attached communication.

UNITED STATES PATENT AND TRADEMARK OFFICE

Commissioner for Patents
United States Patent and Trademark Office
P.O. Box 1450
Alexandria, VA 22313-1450
www.uspto.gov

January 11, 2011

HAMILTON, BROOK, SMITH & REYNOLDS, P.C.
530 VIRGINIA ROAD
P.O. BOX 9133
CONCORD MA 01742-9133

In re Application of :
Jury, Steven H., et al. : **DECISION ON PETITION**
Application No. **12/612518** :
Filed: **11/04/2009** :
Attorney Docket No **2213.2016-005**

This is a decision on the Petition to Accept Color Drawings under 37 C.F.R 1.84 (a) (2), received in the United States Patent and Trademark Office (USPTO) February 25, 2010.

The petition is **DISMISSED.**

A grantable petition under 37 C.F.R. 1.84(a) (2) must be accompanied by the following.

1. The fee set forth under 37 C.F.R. 1.17(h),
2. Three (3) sets of the color drawings in question, (One (1) set for EFW filings, and
3. The specification containing the following language as the first paragraph in that portion of the specification relating to the brief description of the drawings

"The patent or application file contains at least one drawing executed in color. Copies of this patent or patent application publication with color drawing(s) will be provided by the Office upon request and payment of the necessary fee."

The petition did not meet the following requirement(s). 1 ☐ 2 ☐ 3 ☑

A renewed petition filed under 37 C.F.R. 1.84 (a) (2) must be filed within TWO (2) MONTHS of this decision. If a renewed petition is not filed within the TWO (2) Months of this decision the drawings will be printed in black and white.

Telephone inquires relating to this decision may be directed to the undersigned in the Office of Data Management at 571-272-4200.

/Bernadette Queen/
Quality Control Specialist
Office of Data Management
Publications Branch

UNITED STATES PATENT AND TRADEMARK OFFICE

UNITED STATES DEPARTMENT OF COMMERCE
United States Patent and Trademark Office
Address: COMMISSIONER FOR PATENTS
P.O. Box 1450
Alexandria, Virginia 22313-1450
www.uspto.gov

APPLICATION NO.	FILING DATE	FIRST NAMED INVENTOR	ATTORNEY DOCKET NO.	CONFIRMATION NO.
12/612,518	11/04/2009	Steven H. Jury	2213.2016-005	4578

7590 02/02/2011

HAMILTON, BROOK, SMITH & REYNOLDS, P.C.
530 VIRGINIA ROAD
P.O. BOX 9133
CONCORD, MA 01742-9133

EXAMINER	
ABBOTT, YVONNE RENEE	
ART UNIT	PAPER NUMBER
3644	
MAIL DATE	DELIVERY MODE
02/02/2011	PAPER

ACKNOWLEDGEMENT OF REQUEST

Notice of Allowance/Allowability Mailed

The request to print a color drawing reference as the first paragraph in the portion of the specification containing a brief description of the drawings as required by 37 CFR 1.84 and MPEP § 608.02 has been received by the United States Patent and Trademark Office and will be entered into the specification.

571-272-4200 or 1-888-786-0101
Application Assistance Unit
Office of Data Management

FORM PTOM327-5 (Rev. 02/08)

UNITED STATES PATENT AND TRADEMARK OFFICE

Commissioner for Patents
United States Patent and Trademark Office
P.O. Box 1450
Alexandria, VA 22313-1450
www.uspto.gov

February 1, 2011

HAMILTON, BROOK, SMITH & REYNOLDS, P.C.
530 VIRGINIA ROAD
P.O. BOX 9133
CONCORD MA 01742-9133

In re Application of
Jury, Steven H.,et al.
Application No. **12/612518**
Filed: **11/04/2009**
Attorney Docket No **2213.2016-005**

: **DECISION ON PETITION**
: **ACCEPTANCE OF COLOR**
: **DRAWINGS**
:

This is a decision on the Petition to Accept Color Drawings under 37 C.F.R 1.84 (a) (2), received in the United States Patent and Trademark Office (USPTO) February 25, 2010.

The petition is **GRANTED**.

A grantable petition under 37 C.F.R. 1.84(a) (2) must be accompanied by the following.

1. The fee set forth under 37 C.F.R. 1.17(h),
2. Three (3) sets of the color drawings in question, or (1) set if filed via EFS, and
3. The specification containing the following language as the first paragraph in that portion of the specification relating to the brief description of the drawings.

   "The file of this patent contains at least one drawing executed in color. Copies of this patent with color drawing(s) will be provided by the Patent and Trademark Office upon request and payment of the necessary fee."

The petition was accompanied by all of the required fees and drawings. The specification contains the appropriate language. Therefore, the petition is GRANTED.

Telephone inquires relating to this decision may be directed to the undersigned in the Office of Data Management at 571-272-4200.

/Bernadette Queen/
Quality Control Specialist
Office of Data Management
Publications Branch

UNITED STATES PATENT AND TRADEMARK OFFICE

Commissioner for Patents
United States Patent and Trademark Office
P.O. Box 1450
Alexandria, VA 22313-1450
www.uspto.gov

MAILED

MAR 28 2011

OFFICE OF PETITIONS

STAAS & HALSEY LLP
Suite 700
1201 New York Avenue, N.W.
Washington, DC 20005

In re Application of	:	
David S. Dyer	:	
Application No. 12/612,547	:	DECISION ON PETITION
Filed: November 4, 2009	:	TO WITHDRAW
Attorney Docket No. 2138.1002	:	FROM RECORD
	:	

This is a decision on the Request to Withdraw as attorney or agent of record under 37 C.F.R. § 1.36(b), filed February 10, 2011.

The request is **APPROVED**.

A grantable request to withdraw as attorney/agent of record must be signed by every attorney/agent seeking to withdraw or contain a clear indication that one attorney is signing on behalf of another/others. A request to withdraw will not be approved unless at least 30 (thirty) days would remain between the date of approval and the later of the expiration date of a time to file a response or the expiration date of the maximum time period which can be extended under 37 C.F.R. § 1.136(a).

The request was signed by William F. Herbert on behalf of all attorneys of record. All attorneys/agents have been withdrawn. Applicant is reminded that there is no attorney of record at this time.

All future correspondence will be directed to the first named inventor Dyer Holding, LLC at the address indicated below.

Telephone inquiries concerning this decision should be directed to Terri Johnson at 571-272-2991.

/Terri Johnson/
Terri Johnson
Petitions Examiner
Office of Petitions

cc: **Dyer Holding, LLC**
14632 S. Halsey Street
Olathe, KS 66062

UNITED STATES PATENT AND TRADEMARK OFFICE

UNITED STATES DEPARTMENT OF COMMERCE
United States Patent and Trademark Office
Address: COMMISSIONER FOR PATENTS
P.O. Box 1450
Alexandria, Virginia 22313-1450
www.uspto.gov

APPLICATION NUMBER	FILING OR 371(C) DATE	FIRST NAMED APPLICANT	ATTY. DOCKET NO./TITLE
12/612,547	11/04/2009	David S. DYER	2138.1002

CONFIRMATION NO. 4636

POWER OF ATTORNEY NOTICE

21171
STAAS & HALSEY LLP
SUITE 700
1201 NEW YORK AVENUE, N.W.
WASHINGTON, DC 20005

Date Mailed: 03/24/2011

NOTICE REGARDING CHANGE OF POWER OF ATTORNEY

This is in response to the Power of Attorney filed 02/10/2011.

- The withdrawal as attorney in this application has been accepted. Future correspondence will be mailed to the new address of record. 37 CFR 1.33.

/tsjohnson/

Office of Data Management, Application Assistance Unit (571) 272-4000, or (571) 272-4200, or 1-888-786-0101

UNITED STATES PATENT AND TRADEMARK OFFICE

Commissioner for Patents
United States Patent and Trademark Office
P.O. Box 1450
Alexandria, VA 22313-1450
www.uspto.gov

Decision Date : March 2, 2012

In re Application of :

Shivshankar Sundaram

Application No : 12612573

Filed : 04-Nov-2009

Attorney Docket No : CFDRCbet019

DECISION ON REQUEST TO WITHDRAW AS ATTORNEY/AGENTOF RECORD

This is an electronic decision on the Request to Withdraw as attorney or agent of record under 37 CFR § 1.36(b), filed March 2, 2012

The request is **APPROVED.**

The request was signed by Tomas Friend (registration no. 54789) on behalf of all attorneys/agents associated with Customer Number 53371 . All attorneys/agents associated with Cusotmer Number 53371 have been withdrawn.

Since there are no remaining attorneys of record, all future communications from the Office will be directed to the first named inventor or assignee that has properly made itself of record pursuant to 37 CFR 3.71, with correspondence address:

Name	CFD Research Corporation
Name2	Att.: Vincent Harrand
Address 1	215 Wynn Drive
Address 2	Suite 501
City	Huntsville
State	AL
Postal Code	35805
Country	US

As a reminder, requester is required to inform the first named inventor or assignee that has properly made itself of record pursuant to 37 CFR 3.71 of the electronically processed petition.

Telephone inquiries concerning this decision should be directed to the Patent Electronic Business Center (EBC) at 866-217-9197.

Office of Petitions

Doc Code: PET.AUTO **Document Description: Petition automatically granted by EFS-Web**	PTO/SB/83 U.S. Patent and Trademark Office Department of Commerce

Electronic Petition Request	**REQUEST FOR WITHDRAWAL AS ATTORNEY OR AGENT AND CHANGE OF CORRESPONDENCE ADDRESS**
Application Number	12612573
Filing Date	04-Nov-2009
First Named Inventor	Shivshankar Sundaram
Art Unit	1631
Examiner Name	JERRY LIN
Attorney Docket Number	CFDRCbet019
Title	Microfluidic Assay for Characterization of the Leukocyte Adhesion Cascade

◉ Please withdraw me as attorney or agent for the above identified patent application and the practitioners of record associated with Customer Number: 53371

The reason(s) for this request are those described in 37 CFR:

10.40(c)(5)

Certifications

☒ I/We have given reasonable notice to the client, prior to the expiration of the response period, that the practitioner(s) intend to withdraw from employment

☒ I/We have delivered to the client or a duly authorized representative of the client all papers and property (including funds) to which the client is entitled

☒ I/We have notified the client of any responses that may be due and the time frame within which the client must respond

Change the correspondence address and direct all future correspondence to the first named inventor or assignee that has properly made itself of record pursuant to 37 CFR 3.71:

Name	CFD Research Corporation Att.: Vincent Harrand
Address	215 Wynn Drive Suite 501
City	Huntsville
State	AL
Postal Code	35805
Country	US

I am authorized to sign on behalf of myself and all withdrawing practitioners.	
Signature	/Tomas Friend/
Name	Tomas Friend
Registration Number	54789

Doc Code: PET.GREEN
Document Description: Petition for Green Tech Pilot

PTO/SB/420 (11-10)
Approved for use through 01/31/2011. OMB 0651-0062
U.S. Patent and Trademark Office; U. S. DEPARTMENT OF COMMERCE
Under the Paperwork Reduction Act of 1995, no persons are required to respond to a collection of information unless it displays a valid OMB control number.

PETITION TO MAKE SPECIAL UNDER THE GREEN TECHNOLOGY PILOT PROGRAM

Attorney Docket Number: CEP09301	Application Number (if known): 12/612,574	Filing date: November 4, 2009
First Named Inventor: Jason M. Tang		
Title: Corrosion Testing of Fuel-Cell Separator Plate Materials		

APPLICANT HEREBY REQUESTS TO PARTICIPATE IN THE GREEN TECHNOLOGY PILOT PROGRAM FOR THE ABOVE-IDENTIFIED APPLICATION. See Instruction Sheet on page 2.

This petition must be timely filed electronically using the USPTO electronic filing system, EFS-Web.

1. By filing this petition:

   Applicant is requesting early publication: Applicant hereby requests early publication under 37 CFR 1.219 and the publication fee set forth in 37 CFR 1.18(d) accompanies this request.

2. By filing this petition: applicant is agreeing to make an election without traverse in a telephonic interview and elect an invention that meets the eligibility requirements for the Green Technology Pilot Program, if the Office determines that the claims are not obviously directed to a single invention. See Instruction Sheet.

3. This request is accompanied by statements of special status for the eligibility requirement.

4. The application contains no more than three (3) independent claims and twenty (20) total claims.

5. The application does not contain any multiple dependent claims.

6. Other attachments: Preliminary Amendment

Signature /John D. Russell/	Date October 10, 2011
Name (Print/Typed) John D. Russell	Registration Number 47,048

Note: Signatures of all the inventors or assignees of record of the entire interest or their representative(s) are required in accordance with 37 CFR 1.33 and 11.18. Please see 37 CFR 1.4(d) for the form of the signature. If necessary, submit multiple forms for more than one signature see below.*

☒ *Total of 1 forms are submitted.

The information is required to obtain or retain a benefit by the public which is to file (and by the USPTO to process) an application. Confidentiality is governed by 35 U.S.C. 122 and 37 CFR 1.11 and 1.14. This collection is estimated to take 12 hours to complete, including gathering, preparing, and submitting the completed application form to the USPTO. Time will vary depending upon the individual case. Any comments on the amount of time you require to complete this form and/or suggestions for reducing this burden, should be sent to the Chief Information Officer, U.S. Patent and Trademark Office, U.S. Department of Commerce, P.O. Box 1450, Alexandria, VA 22313-1450. DO NOT SEND FEES OR COMPLETED FORMS TO THIS ADDRESS. **SEND TO: Commissioner for Patents, P.O. Box 1450, Alexandria, VA 22313-1450.**

If you need assistance in completing the form, call 1-800-PTO-9199 and select option 2.

IN THE UNITED STATES PATENT AND TRADEMARK OFFICE

Applicants	:	Jason M. Tang, et al.
Application No.	:	12/612,574
Filed	:	November 4, 2009
Title	:	Corrosion Testing of Fuel-Cell Separator Plate Materials
Group Art Unit	:	1795
Confirmation No.	:	4690
Docket No.	:	CEP09301

Commissioner for Patents
P.O. Box 1450
Alexandria, VA 22313-1450

CERTIFICATE OF TRANSMISSION

I hereby certify that this correspondence is being transmitted via the U.S. Patent and Trademark Office electronic filing system (EFS-Web) to the USPTO on:

October 10, 2011	/Angie C. Farr/
Date	Angie C. Farr

STATEMENTS OF SPECIAL STATUS

Applicants respectfully request consideration of the following statement concerning the basis for the special status as well as the following statement pertaining to the materiality standard.

I. Statement concerning the basis for special status.

Applicants submit that special status is sought on the following basis: the claimed invention materially contributes to the more efficient utilization and conservation of energy resources.

II. Statement pertaining to the materiality standard.

As a preliminary matter, Applicants note that the following statement refers explicitly to the elements of independent claim 1, which is the broadest claim in many respects.

Applicants submit that the claimed invention materially contributes to the more efficient utilization and conservation of energy resources by reducing the consumption of fossil fuels. Specifically, the claimed invention increases the efficiency of production and durability of fuel cells. As explained in the Background and Summary of the subject

application, a fuel cell may include a solid, liquid, or gel-like electrolyte that separates a catalyzed anode from a catalyzed cathode. The catalyzed anode may support electrochemical oxidation of a fuel, such as hydrogen or methanol, and the catalyzed cathode may support electrochemical reduction of oxygen. As these reactions occur, electric current flows from the cathode to the anode, via an external circuit.

Accordingly, the fuel cell may include two separator plates—a first separator plate disposed in contact with the catalyzed anode, and a second separator plate disposed in contact with the catalyzed cathode. Each separator plate may conduct electric current to or from its respective electrode and may further constrain the flow of electrode gases (reaction products, fuel, or air) along a prescribed flow path. It is generally desired that the separator plates of a fuel cell be resistant to corrosion, particularly within the working fuel cell. However, achieving adequate corrosion resistance for separator plate materials may require effort and experimentation, as some constituents of the fuel cell—notably the electrolyte—may be highly corrosive. For instance, some fuel cells include concentrated phosphoric acid as an electrolyte; some others include a polymer-electrolyte membrane in which phosphoric acid is sorbed.

The process of developing a durable fuel cell may therefore include a materials-testing phase, where candidate separator plate materials are characterized for corrosion resistance in environments comparable to that of a working fuel cell. However, such testing phases are typically time-consuming, labor-intensive, and therefore inapplicable to the rapid screening of novel separator plate materials. This may result in a delay of getting usable fuel cells to the market, and may contribute to the production of less durable fuel cells.

The claimed invention addresses this issue by providing a rapid screening method for determining the corrosion properties of candidate separator plates. In doing so, material resistant to corrosion may be selected for the construction of separator plates included in fuel cells, and thus more durable, longer lasting fuel cells may be produced. For example, claim 1 recites:

> A method for conducting a corrosion test on a specimen immersed in an electrolyte in an electrochemical cell, the method comprising:
>
> experimentally relating a plurality of potentials of the specimen to a plurality of currents drawn through the specimen by applying the plurality

of potentials to the specimen while measuring the plurality of currents, or, by drawing the plurality of currents through the specimen while measuring the plurality of potentials; wherein the plurality of potentials are referenced to a hydrogen reference electrode also immersed in the electrolyte;

supplying hydrogen to the hydrogen reference electrode via an electrolysis cathode distinct from the hydrogen reference electrode;

measuring a corrosion property of a material from which the specimen is constructed based on the relating; and

forming separator plates a fuel cell, the separator plates including the material based on the measured corrosion property.

By experimentally relating the potentials to the currents, an electrochemical property of the specimen—e.g., a potential-dependent corrosion property—may be measured. In this way, the material or materials from which the separator plates are formed may be chosen based *inter alia* on resistance to corrosion within the fuel-cell environment. For example, the membrane of the fuel cell includes phosphoric acid, the separator plates may be formed from a material shown to resist corrosion in phosphoric-acid media over the range of potentials experienced by the separator plates in a working fuel cell. By selecting a corrosion-resistant material for the separator plates, the performance and longevity of the fuel cell may be improved. Because fuel cells utilize non-fossil fuels such as hydrogen and methanol, extending the amount of time a fuel cell is operational results in decreased consumption of fossil fuels. And, by more efficiently using the non-fossil fuels, still further reductions in fossil fuel use are achieved. Furthermore, one factor preventing more widespread use of fuel cells is their high cost. By extending the duration over which a fuel cell can be operated and decreasing the production time of the fuel cell, the claimed invention lowers the lifetime cost of a fuel cell, making it more likely fuel cells will be utilized to produce energy, thus lowering the consumption of fossil fuels.

Please charge any cost incurred in this filing, along with any other costs, to Deposit Account No. 50-3397.

Respectfully submitted,

ALLEMAN HALL MCCOY RUSSELL & TUTTLE LLP

/John D. Russell/
John D. Russell
Registration No. 47,048
Customer No. 50488
Attorney/Agent for Applicants/Assignee
806 S.W. Broadway, Suite 600
Portland, Oregon 97205
Telephone: (503) 459-4141
Facsimile: (503) 459-4142

UNITED STATES PATENT AND TRADEMARK OFFICE

UNITED STATES DEPARTMENT OF COMMERCE
United States Patent and Trademark Office
Address: COMMISSIONER FOR PATENTS
P.O. Box 1450
Alexandria, Virginia 22313-1450
www.uspto.gov

APPLICATION NO.	FILING DATE	FIRST NAMED INVENTOR	ATTORNEY DOCKET NO.	CONFIRMATION NO.
12/612,574	11/04/2009	Jason M. Tang	CEP09301	4690

50488 7590 11/10/2011

ALLEMAN HALL MCCOY RUSSELL & TUTTLE LLP
806 SW BROADWAY
SUITE 600
PORTLAND, OR 97205-3335

EXAMINER	
BALL, JOHN C	

ART UNIT	PAPER NUMBER
1759	

MAIL DATE	DELIVERY MODE
11/10/2011	PAPER

Please find below and/or attached an Office communication concerning this application or proceeding.

The time period for reply, if any, is set in the attached communication.

UNITED STATES PATENT AND TRADEMARK OFFICE

Commissioner for Patents
United States Patent and Trademark Office
P.O. Box 1450
Alexandria, VA 22313-1450
www.uspto.gov

11/10/11

ALLEMAN HALL MCCOY RUSSELL & TUTTLE LLP
806 SW BROADWAY
SUITE 600
PORTLAND OR 97205-3335

In re Application of	:	
Tang et al.	:	DECISION ON PETITION
Application No. 12/612,574	:	TO MAKE SPECIAL UNDER
Filed: 11/4/2009	:	THE GREEN TECHNOLOGY
Attorney Docket No. **CEP09301**	:	PILOT PROGRAM

This is a decision on the petition under 37 CFR 1.102, filed 10/10/2011, to make the above-identified application special under the pilot program for applications pertaining to Green Technologies as set forth in 74 Federal Register Notice 64666 (December 8, 2009) and amended by 75 Federal Register Notice 28554 (May 21, 2010) and 75 Federal Register Notice 69049 (November 10, 2010).

The petition is **GRANTED**.

A grantable petition to make an application special under 37 CFR 1.102 and the pilot program as set forth in 74 FR 64666 must be directed to a nonprovisional application filed under 35 USC 111(a) or be a national stage entry under 35 USC 371, exclusive of any reissue applications.

In order to qualify for special status, the following requirements must be met. 1) The application must have no more than 3 independent claims and no more than 20 total claims. 2) The application must not contain any multiple dependent claims. 3) The petition must state the basis for seeking special status, i.e., the claimed invention either: A) materially enhances the quality of the environment or B) materially contributes to: i) the discovery or development of renewable energy resources, ii) the more efficient utilization and conservation of energy resources, or iii) greenhouse gas emission reduction. 4) If the disclosure is not clear on its face that the claimed invention materially contributes under category (A) or (B), the petition must be accompanied by a statement by the applicant, assignee, or an attorney/agent registered to practice before the Office explaining how the materiality standard is met. 5) A statement that applicant will agree to make an election without traverse in a telephonic interview if a restriction requirement is made by the examiner. 6) The petition to make special must be filed electronically. 7) The petition must be filed at least one day prior to the date that a first Office Action appears in the Patent Application Information Retrieval (PAIR) system. 8) The petition must be accompanied by a

request for early publication in compliance with 37 CFR 1.219 and include the publication fee as set forth in 37 CFR 1.18(d).

The requirement for a fee for consideration of the petition to make special for applications pertaining to Green Technologies has been waived.

The instant petition complies with items 1 – 8 above. Accordingly, the above-identified application has been accorded "special" status.

Telephone inquires concerning this decision should be directed to Tom Dunn at 571-272-1171.

The application is being forwarded to the Technology Center Art Unit 1759 for action on the merits commensurate with this decision.

/Tom Dunn/

Tom Dunn
Quality Assurance Specialist
Technology Center 1700

UNITED STATES PATENT AND TRADEMARK OFFICE

Commissioner for Patents
United States Patent and Trademark Office
P.O. Box 1450
Alexandria, VA 22313-1450
www.uspto.gov

FULBRIGHT AND JAWORSKI LLP
555 S. FLOWER STREET, 41ST FLOOR
LOS ANGELES CA 90071

MAILED

MAY 02 2011

OFFICE OF PETITIONS

In re Application of :
LINDER, et al :
Application No. 12/612,587 : DECISION ON PETITION
Filed: November 4, 2009 : TO WITHDRAW
Attorney Docket No. LA-7784-103US/10911103 : FROM RECORD
:

This is a decision on the Request to Withdraw as attorney or agent under 37 C.F.R. § 1.36(b) filed March 4, 2011.

The request is **NOT APPROVED**.

The Office will no longer approve requests from practitioners to withdraw from applications where the requesting practitioner is acting, or has acted, in a representative capacity pursuant to 37 CFR 1.34. In these situations, the practitioner is responsible for the correspondence the practitioner files in the application while acting in a representative capacity. As such, there is no need for the practitioner to obtain the Office's permission to withdraw from representation. However, practitioners acting in a representative capacity, like practitioners who have a power of attorney in the application, remain responsible for noncompliance with 37 CFR 1.56, as well as 37 CFR 10.18, with respect to documents they file.

A review of the file record indicates that Marc L. Deflache does not have power of attorney in this patent application. See 37 C.F.R. § 10.40. Accordingly, the request to withdraw under 37 C.F.R. § 1.36(b) is not applicable.

All future communications from the Office will continue to be directed to the above-identified address until otherwise properly notified.

Telephone inquires concerning this decision should be directed to the undersigned at (571) 272-6735.

/Diane C. Goodwyn/
Diane C. Goodwyn
Petitions Examiner
Office of Petitions

cc: STUART A. LINDER, M.D.
9675 BRIGHTON WAY, SUITE 420
BEVERLY HILLS, CA 90210

cc: MARC L. DEFLACHE
FULBRIGHT & JAWORSKI, L.L.P.
2200 ROSS AVENUE, SUITE 2800
DALLAS TX 75201

UNITED STATES PATENT AND TRADEMARK OFFICE

Commissioner for Patents
United States Patent and Trademark Office
P.O. Box 1450
Alexandria, VA 22313-1450
www.uspto.gov

FULBRIGHT AND JAWORSKI LLP
555 S. FLOWER STREET, 41ST FLOOR
LOS ANGELES CA 90071

MAILED

JUN 08 2011

OFFICE OF PETITIONS

In re Application of :
LINDER, et al :
Application No. 12/612,587 : DECISION ON PETITION
Filed: November 4, 2009 : TO WITHDRAW
Attorney Docket No. LA-7784-103US/10911103 : FROM RECORD
:

This is a decision on the Request to Withdraw as attorney or agent under 37 C.F.R. § 1.36(b) filed May 13, 2011.

The request is **APPROVED**.

A grantable request to withdraw as attorney/agent of record must be signed by every attorney/agent seeking to withdraw or contain a clear indication that one attorney is signing on behalf of another/others. The Office requires the practitioner(s) requesting withdrawal to certify that he, she, or they have: (1) given reasonable notice to the client, prior to the expiration of the response period, that the practitioner(s) intends to withdraw from employment; (2) delivered to the client or a duly authorized representative of the client all papers and property (including funds) to which the client is entitled; and (3) notified the client of any responses that may be due and the time frame within which the client must respond, pursuant 37 CFR 10.40(c).

The request was signed by Ross Viguet on behalf of the attorneys of record associated with Customer No. 00167.

The attorneys of record associated with Customer No. 00167 have been withdrawn.

Applicant is reminded that there is no attorney of record at this time.

The correspondence address of record has been changed and the new correspondence address is the address first copied below until otherwise properly notified.

Telephone inquires concerning this decision should be directed to the undersigned at (571) 272-6735.

/Diane C. Goodwyn/
Diane C. Goodwyn
Petitions Examiner
Office of Petitions

cc: STUART A. LINDER, M.D.
9675 BRIGHTON WAY, SUITE 420
BEVERLY HILLS, CA 90210

cc: ROSS VIGUET
FULBRIGHT & JAWORSKI, LLP:
2200 ROSS AVENUE, SUITE 2800
DALLAS TX 75201

UNITED STATES PATENT AND TRADEMARK OFFICE

UNITED STATES DEPARTMENT OF COMMERCE
United States Patent and Trademark Office
Address: COMMISSIONER FOR PATENTS
P.O. Box 1450
Alexandria, Virginia 22313-1450
www.uspto.gov

APPLICATION NUMBER	FILING OR 371(C) DATE	FIRST NAMED APPLICANT	ATTY. DOCKET NO./TITLE
12/612,587	11/04/2009	STUART LINDER	LA-7784-103US/10911103

CONFIRMATION NO. 4715

167
FULBRIGHT AND JAWORSKI LLP
555 S. FLOWER STREET, 41ST FLOOR
LOS ANGELES, CA 90071

POWER OF ATTORNEY NOTICE

OC000000048003608

Date Mailed: 06/02/2011

NOTICE REGARDING CHANGE OF POWER OF ATTORNEY

This is in response to the Power of Attorney filed 05/13/2011.

- The withdrawal as attorney in this application has been accepted. Future correspondence will be mailed to the new address of record. 37 CFR 1.33.

/dcgoodwyn/

Office of Data Management, Application Assistance Unit (571) 272-4000, or (571) 272-4200, or 1-888-786-0101

UNITED STATES PATENT AND TRADEMARK OFFICE

Commissioner for Patents
United States Patent and Trademark Office
P.O. Box 1450
Alexandria, VA 22313-1450
www.uspto.gov

GREENBERG TRAURIG (NJ)
200 PARK AVE.
P.O. BOX 677
FLORHAM PARK NJ 07932

MAILED

NOV 07 2011

OFFICE OF PETITIONS

In re Application of	:	DECISION ON PETITION
Tezapsidis et al.	:	UNDER 37 CFR 1.78(a)(3)
Application No. 12/612,613	:	and
Filed: November 4, 2009	:	DECISION ON PETITION
Attorney Docket No.	:	UNDER 37 CFR 1.78(a)(6)
117468.010101	:	

This is a decision on the PETITION TO ACCEPT AN UNINTENTIONALLY DELAYED CLAIM FOR PRIORITY UNDER 37 C.F.R. 1.78(a)(3) and 1.78(a)(6) filed September 30, 2011, to accept an unintentionally delayed claim to prior-filed application number 12/470,427, which claims the benefit of priority from provisional application No. 61/055,009, and to application number 11/516,224, which claims the benefit of priority from provisional application No. 60/714,948.

The petition is **GRANTED**.

A petition for acceptance of a claim for late priority under 37 CFR §§ 1.78(a)(3) and 37 CFR 1.78(a)(6) is only applicable to those applications filed on or after November 29, 2000. Further, the petition is appropriate only after the expiration of the period specified in 37 CFR §§ 1.78(a)(2)(ii) and 37 CFR 1.78(a)(5)(ii), respectively, and must be filed during the pendency of the nonprovisional application. In addition, the petition under 37 CFR § 1.78(a)(3) and 37 CFR § 1.78(a)(6), respectively, must be accompanied by:

(1) the reference required by 35 U.S.C. § 120 and 37 CFR § 1.78(a)(2)(i) 35 U.S.C. § 119(e) and 37 CFR 1.78(a)(5)(i), respectively, of the prior-filed application, unless previously submitted;
(2) the surcharge set forth in § 1.17(t); and

(3) a statement that the entire delay between the date the claim was due under 37 CFR §§ 1.78(a)(2)(ii) and 37 CFR 1.78(a)(5)(ii), respectively, and the date the claim was filed was unintentional. The Director may require additional where there is a question whether the delay was unintentional.

The instant application was filed after November 29, 2000. A review of the application as filed reveals that the claims for priority set forth on petition were not submitted on filing in the first sentence of the specification or in an application data sheet. The four and sixteen-month periods specified in 37 CFR §§ 1.78(a)(2)(ii) and 37 CFR 1.78(a)(5)(ii) have expired. Thus, the instant petition is appropriate. In addition, the petition includes the required statement of unintentional delay and the required surcharge.

On petition, a reference to the prior-filed nonprovisional and provisional applications has been included in an amendment, as required by 37 CFR 1.78(a)(2)(iii) and (a)(5)(iii). With respect to the applications so incorporated, the incorporation by reference statement included in the amendment was present on filing of the application.

With respect to 35 U.S.C. 120 and 37 CFR 1.78(a)(3), the amendment includes a reference to prior-filed application Nos. 12/470,427 and 11/516,224, with the appropriate relationships both stated as continuation-in-part.

With respect to 35 U.S.C. 119(e) and 37 CFR 1.78(a)(6), the claim for benefit of priority under 35 U.S.C. § 119(e) of provisional application no. 61/055,009 was properly made in intermediate application no. 12/470,427 on filing, on May 21, 2009. The filing date of provisional application no. 61/055,009 for which priority is claimed is, May 21, 2008, which is within twelve months of the filing date of intermediate application No. 12/470,427.

Likewise, the claim for benefit of priority under 35 U.S.C. § 119(e) of provisional application no. 60/714,948 was properly made in intermediate application no. 11/516,224 on filing, on September 6, 2006. The filing date of provisional application no. 60/714,948 for which priority is claimed is, September 7, 2005, which is within twelve

months of the filing date of intermediate application No. 11/516,224.

All of the above requirements having been satisfied, the late claim for benefit of priority to the prior-filed applications under 35 U.S.C. § 120 and 35 U.S.C. § 119(e) is accepted as being unintentionally delayed.

The granting of the petition to accept the delayed benefit claim to the prior-filed applications under 37 CFR §§ 1.78(a)(3) and (a)(6) should not be construed as meaning that this application is entitled to the benefit of the filing date of the prior-filed applications. In order for this application to be entitled to the benefit of the prior-filed application, all other requirements under 35 U.S.C. §§120 and 1.78(a)(1) and (a)(2) and §§119(e) and 1.78(a)(4) and (a)(5) must be met. Similarly, the fact that the corrected Filing Receipt accompanying this decision on petition includes the prior-filed applications should not be construed as meaning that applicant is entitled to the claim for benefit of priority to the prior-filed applications noted thereon. Accordingly, the examiner will, in due course, consider this benefit claim and determine whether the application is entitled to the benefit of the earlier filing date.

A corrected Filing Receipt, which includes the priority claim to the prior-filed applications, accompanies this decision on petition.

Any questions concerning this matter may be directed to the undersigned at (571) 272-3219. All other inquiries concerning either the examination procedures or status of the application should be directed to the Technology Center.

This application is being referred to Technology Center Art Unit 1649 for consideration by the examiner of the claim for benefit of priority under 35 U.S.C. §§ 120 and 119(e) of the prior-filed applications as set forth in the amendment filed September 30, 2011.

/NancyJohnson/

Nancy Johnson
Senior Petitions Attorney
Office of Petitions

ATTACHMENT: Corrected Filing Receipt

UNITED STATES PATENT AND TRADEMARK OFFICE

UNITED STATES DEPARTMENT OF COMMERCE
United States Patent and Trademark Office
Address: COMMISSIONER FOR PATENTS
P.O. Box 1450
Alexandria, Virginia 22313-1450
www.uspto.gov

APPLICATION NUMBER	FILING or 371(c) DATE	GRP ART UNIT	FIL FEE REC'D	ATTY.DOCKET.NO	TOT CLAIMS	IND CLAIMS
12/612,613	11/04/2009	1649	1195	117468.010101	43	3

CONFIRMATION NO. 4771

CORRECTED FILING RECEIPT

67395
GREENBERG TRAURIG (NJ)
200 PARK AVE.
P.O. BOX 677
FLORHAM PARK, NJ 07932

Date Mailed: 11/07/2011

Receipt is acknowledged of this non-provisional patent application. The application will be taken up for examination in due course. Applicant will be notified as to the results of the examination. Any correspondence concerning the application must include the following identification information: the U.S. APPLICATION NUMBER, FILING DATE, NAME OF APPLICANT, and TITLE OF INVENTION. Fees transmitted by check or draft are subject to collection. Please verify the accuracy of the data presented on this receipt. **If an error is noted on this Filing Receipt, please submit a written request for a Filing Receipt Correction. Please provide a copy of this Filing Receipt with the changes noted thereon. If you received a "Notice to File Missing Parts" for this application, please submit any corrections to this Filing Receipt with your reply to the Notice. When the USPTO processes the reply to the Notice, the USPTO will generate another Filing Receipt incorporating the requested corrections**

Applicant(s)

Nikolaos Tezapsidis, West Orange, NJ;
Steven J. Greco, Carlstadt, NJ;
Mark Smith, Cleveland, OH;

Power of Attorney: The patent practitioners associated with Customer Number 67395

Domestic Priority data as claimed by applicant

This appln claims benefit of 61/186,102 06/11/2009
and claims benefit of 61/111,197 11/04/2008
and is a CIP of 12/470,427 05/21/2009
which claims benefit of 61/055,009 05/21/2008
and is a CIP of 11/516,224 09/06/2006
which claims benefit of 60/714,948 09/07/2005

Foreign Applications (You may be eligible to benefit from the **Patent Prosecution Highway** program at the USPTO. Please see http://www.uspto.gov for more information.)

Permission to Access - A proper **Authorization to Permit Access to Application by Participating Offices** (PTO/SB/39 or its equivalent) has been received by the USPTO.

If Required, Foreign Filing License Granted: 11/18/2009

The country code and number of your priority application, to be used for filing abroad under the Paris Convention, is **US 12/612,613**

Projected Publication Date: Not Applicable

Non-Publication Request: No

Early Publication Request: No
**** SMALL ENTITY ****
Title

LEPTIN COMPOSITIONS AND METHODS FOR TREATING PROGRESSIVE COGNITIVE FUNCTION DISORDERS RESULTING FROM ACCUMULATION OF NEUROFIBRILLARY TANGLES AND AMLYOID BETA

Preliminary Class

514

PROTECTING YOUR INVENTION OUTSIDE THE UNITED STATES

Since the rights granted by a U.S. patent extend only throughout the territory of the United States and have no effect in a foreign country, an inventor who wishes patent protection in another country must apply for a patent in a specific country or in regional patent offices. Applicants may wish to consider the filing of an international application under the Patent Cooperation Treaty (PCT). An international (PCT) application generally has the same effect as a regular national patent application in each PCT-member country. The PCT process **simplifies** the filing of patent applications on the same invention in member countries, but **does not result** in a grant of "an international patent" and does not eliminate the need of applicants to file additional documents and fees in countries where patent protection is desired.

Almost every country has its own patent law, and a person desiring a patent in a particular country must make an application for patent in that country in accordance with its particular laws. Since the laws of many countries differ in various respects from the patent law of the United States, applicants are advised to seek guidance from specific foreign countries to ensure that patent rights are not lost prematurely.

Applicants also are advised that in the case of inventions made in the United States, the Director of the USPTO must issue a license before applicants can apply for a patent in a foreign country. The filing of a U.S. patent application serves as a request for a foreign filing license. The application's filing receipt contains further information and guidance as to the status of applicant's license for foreign filing.

Applicants may wish to consult the USPTO booklet, "General Information Concerning Patents" (specifically, the section entitled "Treaties and Foreign Patents") for more information on timeframes and deadlines for filing foreign patent applications. The guide is available either by contacting the USPTO Contact Center at 800-786-9199, or it can be viewed on the USPTO website at http://www.uspto.gov/web/offices/pac/doc/general/index.html.

For information on preventing theft of your intellectual property (patents, trademarks and copyrights), you may wish to consult the U.S. Government website, http://www.stopfakes.gov. Part of a Department of Commerce initiative, this website includes self-help "toolkits" giving innovators guidance on how to protect intellectual property in specific countries such as China, Korea and Mexico. For questions regarding patent enforcement issues, applicants may call the U.S. Government hotline at 1-866-999-HALT (1-866-999-4158).

LICENSE FOR FOREIGN FILING UNDER

Title 35, United States Code, Section 184

Title 37, Code of Federal Regulations, 5.11 & 5.15

GRANTED

The applicant has been granted a license under 35 U.S.C. 184, if the phrase "IF REQUIRED, FOREIGN FILING LICENSE GRANTED" followed by a date appears on this form. Such licenses are issued in all applications where the conditions for issuance of a license have been met, regardless of whether or not a license may be required as set forth in 37 CFR 5.15. The scope and limitations of this license are set forth in 37 CFR 5.15(a) unless an earlier license has been issued under 37 CFR 5.15(b). The license is subject to revocation upon written notification. The date indicated is the effective date of the license, unless an earlier license of similar scope has been granted under 37 CFR 5.13 or 5.14.

This license is to be retained by the licensee and may be used at any time on or after the effective date thereof unless it is revoked. This license is automatically transferred to any related applications(s) filed under 37 CFR 1.53(d). This license is not retroactive.

The grant of a license does not in any way lessen the responsibility of a licensee for the security of the subject matter as imposed by any Government contract or the provisions of existing laws relating to espionage and the national security or the export of technical data. Licensees should apprise themselves of current regulations especially with respect to certain countries, of other agencies, particularly the Office of Defense Trade Controls, Department of State (with respect to Arms, Munitions and Implements of War (22 CFR 121-128)); the Bureau of Industry and Security, Department of Commerce (15 CFR parts 730-774); the Office of Foreign AssetsControl, Department of Treasury (31 CFR Parts 500+) and the Department of Energy.

NOT GRANTED

No license under 35 U.S.C. 184 has been granted at this time, if the phrase "IF REQUIRED, FOREIGN FILING LICENSE GRANTED" DOES NOT appear on this form. Applicant may still petition for a license under 37 CFR 5.12, if a license is desired before the expiration of 6 months from the filing date of the application. If 6 months has lapsed from the filing date of this application and the licensee has not received any indication of a secrecy order under 35 U.S.C. 181, the licensee may foreign file the application pursuant to 37 CFR 5.15(b).

SelectUSA

The United States represents the largest, most dynamic marketplace in the world; an unparalleled location for innovation and commercialization of new technologies. Through SelectUSA, our nation works to encourage, facilitate, and accelerate business investment. Go to www.SelectUSA.gov for more information. Whether you choose to visit www.SelectUSA.gov will have no effect on the examination of your patent application.

UNITED STATES PATENT AND TRADEMARK OFFICE

Commissioner for Patents
United States Patent and Trademark Office
P.O. Box 1450
Alexandria, VA 22313-1450
www.uspto.gov

TEXAS INSTRUMENTS
INCORPORATED
P O BOX 655474, M/S 3999
DALLAS TX 75265

MAILED
AUG 18 2011
OFFICE OF PETITIONS

In re Application of

Rajendran, et al. :

Application No. 12/612,691

: DECISION ON PETITION

Filed: November 5, 2009

:

Attorney Docket No. **TI-67219**

This is a decision on the petition under 37 CFR 1.137(b), filed August 5, 2011, to revive the above-identified application.

The petition is **GRANTED**.

The above-cited application became abandoned for failure to reply in a timely manner to the non-final Office action mailed, December 10, 2010, which set a shortened statutory period for reply of three (3) months from its mailing date. No extension of time pursuant to 37 CFR 1.136(a) was obtained within the allowable period. Accordingly, the application became abandoned on March 11, 2011. A Notice of Abandonment was mailed June 24, 2011.

The amendment filed August 5, 2011, is noted.

The application is being forwarded to Technology Center 2800, GAU 2817 for further processing.

Telephone inquiries concerning this decision should be directed to the undersigned at (571) 272-3222.

/Kenya A. McLaughlin/

Kenya A. McLaughlin
Petitions Attorney
Office of Petitions

Doc Code: PET.AUTO Document Description: Petition automatically granted by EFS-Web	PTO/SB/140 U.S. Patent and Trademark Office Department of Commerce

Electronic Petition Request	**PETITION TO WITHDRAW AN APPLICATION FROM ISSUE AFTER PAYMENT OF THE ISSUE FEE UNDER 37 CFR 1.313(c)**
Application Number	12612779
Filing Date	05-Nov-2009
First Named Inventor	Tsunenori Suzuki
Art Unit	2879
Examiner Name	PETER MACCHIAROLO
Attorney Docket Number	0553-0590.01
Title	LIGHT-EMITTING ELEMENT, LIGHT-EMITTING DEVICE, AND ELECTRONIC DEVICE

An application may be withdrawn from issue for further action upon petition by the applicant. To request that the Office withdraw an application from issue, applicant must file a petition under this section including the fee set forth in § 1.17(h) and a showing of good and sufficient reasons why withdrawal of the application from issue is necessary.

APPLICANT HEREBY PETITIONS TO WITHDRAW THIS APPLICATION FROM ISSUE UNDER 37 CFR 1.313(c).

A grantable petition requires the following items:
(1) Petition fee; and
(2) One of the following reasons:
(a) Unpatentability of one or more claims, which must be accompanied by an unequivocal statement that one or more claims are unpatentable, an amendment to such claim or claims, and an explanation as to how the amendment causes such claim or claims to be patentable;
(b) Consideration of a request for continued examination in compliance with § 1.114 (for a utility or plant application only); or
(c) Express abandonment of the application. Such express abandonment may be in favor of a continuing application, but not a CPA under 37 CFR 1.53(d).

Petition Fee

☐ Applicant claims SMALL ENTITY status. See 37 CFR 1.27.

☐ Applicant is no longer claiming SMALL ENTITY status. See 37 CFR 1.27(g)(2).

☐ Applicant(s) status remains as SMALL ENTITY.

☒ Applicant(s) status remains as other than SMALL ENTITY

Reason for withdrawal from issue

◯ One or more claims are unpatentable ◉ Consideration of a request for continued examination (RCE) (List of Required Documents and Fees) ◯ Applicant hereby expressly abandons the instant application (any attorney/agent signing for this reason must have power of attorney pursuant to 37 CFR 1.32(b)).
RCE request,submission, and fee. ☐ I certify, in accordance with 37 CFR 1.4(d)(4) that : The RCE request ,submission, and fee have already been filed in the above-identified application on ☒ Are attached.
THIS PORTION MUST BE COMPLETED BY THE SIGNATORY OR SIGNATORIES I certify, in accordance with 37 CFR 1.4(d)(4) that I am: ◉ An attorney or agent registered to practice before the Patent and Trademark Office who has been given power of attorney in this application. ◯ An attorney or agent registered to practice before the Patent and Trademark Office, acting in a representative capacity. ◯ A sole inventor ◯ A joint inventor; I certify that I am authorized to sign this submission on behalf of all of the inventors ◯ A joint inventor; all of whom are signing this e-petition ◯ The assignee of record of the entire interest that has properly made itself of record pursuant to 37 CFR 3.71

Signature	/Mark J Murphy/
Name	Mark J Murphy
Registration Number	34225

UNITED STATES PATENT AND TRADEMARK OFFICE

Commissioner for Patents
United States Patent and Trademark Office
P.O. Box 1450
Alexandria, VA 22313-1450
www.uspto.gov

Decision Date : February 2, 2012

In re Application of :

Tsunenori Suzuki

DECISION ON PETITION

UNDER CFR 1.313(c)(2)

Application No : 12612779

Filed : 05-Nov-2009

Attorney Docket No : 0553-0590.01

This is an electronic decision on the petition under 37 CFR 1.313(c)(2), filed February 2, 2012 , to withdraw the above-identified application from issue after payment of the issue fee.

The petition is **GRANTED.**

The above-identified application is withdrawn from issue for consideration of a submission under 37 CFR 1.114 (request for continued examination). See 37 CFR 1.313(c)(2).

Petitioner is advised that the issue fee paid in this application cannot be refunded. If, however, this application is again allowed, petitioner may request that it be applied towards the issue fee required by the new Notice of Allowance.

Telephone inquiries concerning this decision should be directed to the Patent Electronic Business Center (EBC) at 866-217-9197.

This application file is being referred to Technology Center AU 2879 for processing of the request for continuing examination under 37 CFR 1.114 .

Office of Petitions

UNITED STATES PATENT AND TRADEMARK OFFICE

Commissioner for Patents
United States Patent and Trademark Office
P.O. Box 1450
Alexandria, VA 22313-1450
www.uspto.gov

December 23, 2011

Davidson, Davidson & Kappel, LLC
485 7th Avenue
14th Floor
New York NY 10018

In re Application of	:	
Ebright, Richard H.	:	**DECISION ON PETITION**
Application No. 12/612,787	:	
Filed: 11/05/2009	:	***ACCEPTANCE OF COLOR***
Attorney Docket No. 614.1028CON	:	***DRAWINGS***

This is a decision on the Petition to Accept Color Drawings under 37 C.F.R 1.84 (a) (2), received in the United States Patent and Trademark Office (USPTO) July 15, 2010.

The petition is **GRANTED**.

A grantable petition under 37 C.F.R. 1.84(a) (2) must be accompanied by the following.

1. The fee set forth under 37 C.F.R. 1.17(h),
2. Three (3) sets of the color drawings in question, or (1) set if filed via EFS, and
3. The specification contains appropriate language referring to the color drawings as the first paragraph in that portion of the specification relating to the brief description of the drawings.

The petition was accompanied by all of the required fees and drawings. The specification contains the appropriate language. Therefore, the petition is GRANTED.

Telephone inquires relating to this decision may be directed to the undersigned in the Office of Data Management at 571-272-4200.

/Diane Terry/
Quality Control Specialist
Office of Data Management
Publications Branch

UNITED STATES PATENT AND TRADEMARK OFFICE

Commissioner for Patents
United States Patent and Trademark Office
P.O. Box 1450
Alexandria, VA 22313-1450
www.uspto.gov

CANTOR COLBURN, LLP
20 CHURCH STREET
22ND FLOOR
HARTFORD CT 06103

MAILED

SEP 09 2010

OFFICE OF PETITIONS

In re Application of :
Georges BRIGHAM :
Application No. 12/612,810 : DECISION ON PETITION
Filed: November 5, 2009 : TO MAKE SPECIAL UNDER
Attorney Docket No. GGB0001USC : 37 CFR 1.102(c)(1)
:

This is a decision on the petition under 37 CFR 1.102(c)(1), filed August 20, 2010, to make the above-identified application special based on applicant's age as set forth in M.P.E.P. § 708.02, Section IV.

The petition is **GRANTED**.

A grantable petition to make an application special under 37 CFR 1.102(c)(1) and MPEP § 708.02, Section IV: Applicant's Age must be accompanied by evidence showing that at least one of the applicants is 65 years of age, or more, such as a birth certificate or a statement by applicant. No fee is required

The instant petition includes a statement made by registered attorney Dave S. Christensen, which will be treated as the result of the attorney having evidence that at least one of the applicants is 65 years of age or more. In the event that such evidence is not with the attorney, the Office should be notified immediately. Accordingly, the above-identified application has been accorded "special" status.

Telephone inquiries concerning this decision should be directed to undersigned at (571) 272-6735.

All other inquiries concerning either the examination or status of the application should be directed to the Technology Center at (571) 272-3600.

The application is being forwarded to Technology Center Art Unit 3617 for action on the merits commensurate with this decision.

/DCG/
Diane C. Goodwyn
Petitions Examiner
Office of Petitions

UNITED STATES PATENT AND TRADEMARK OFFICE

UNITED STATES DEPARTMENT OF COMMERCE
United States Patent and Trademark Office
Address: COMMISSIONER FOR PATENTS
P.O. Box 1450
Alexandria, Virginia 22313-1450
www.uspto.gov

APPLICATION NO.	FILING DATE	FIRST NAMED INVENTOR	ATTORNEY DOCKET NO.	CONFIRMATION NO.
12/612,829	11/05/2009	Eriko Nonaka	TTCIP192US	5223

7590 03/14/2012

TUROCY & WATSON, LLP
127 Public Square
57th Floor, Key Tower
CLEVELAND, OH 44114

EXAMINER	
MONIKANG, GEORGE C	
ART UNIT	PAPER NUMBER
2614	
NOTIFICATION DATE	DELIVERY MODE
03/14/2012	ELECTRONIC

DECISION DISMISSING PETITION UNDER 37 CFR 1.138(c)

The declaration of express abandonment will not be recognized

This is in response to the petition under 37 CFR 1.138(c), for express abandonment to avoid publication of the above-identified application.

The petition is dismissed.

The express abandonment will **not** be recognized for the reason(s) indicated below:

1. ☐ The petition under 37 CFR 1.138(c) was not filed in sufficient time to permit the appropriate officials to recognize the abandonment and remove the application from the publication process.
2. ☐ The petition was not signed by a party authorized by 37 CFR 1.33(b)(1), (3) or (4).
3. ☑ The Application was published in compliance with 35 U.S.C. 122(b), and it is available on the USPTO web site at http://www.uspto.gov/patft/index.html.
4. ☐ Petition fee was not paid.

The application **has/will be published** as scheduled.

Telephone inquiries should be directed to the Office of Data Management at (571) 272-4200.

Patent Publication Branch
Office of Data Management

UNITED STATES PATENT AND TRADEMARK OFFICE

UNITED STATES DEPARTMENT OF COMMERCE
United States Patent and Trademark Office
Address: COMMISSIONER FOR PATENTS
P.O. Box 1450
Alexandria, Virginia 22313-1450
www.uspto.gov

APPLICATION NO.	FILING DATE	FIRST NAMED INVENTOR	ATTORNEY DOCKET NO.	CONFIRMATION NO.
12/612,829	11/05/2009	Eriko Nonaka	TTCIP192US	5223

7590 03/14/2012

TUROCY & WATSON, LLP
127 Public Square
57th Floor, Key Tower
CLEVELAND, OH 44114

EXAMINER	
MONIKANG, GEORGE C	
ART UNIT	PAPER NUMBER
2614	
NOTIFICATION DATE	DELIVERY MODE
03/14/2012	ELECTRONIC

DECISION GRANTING PETITION UNDER 37 CFR 1.138(d)

The declaration of express abandonment is recognized

This is in response to the petition under 37 CFR 1.138(d), requesting for a refund of any previously paid search fee and excess claims fee in the above-identified application.

The petition is granted.

The express abandonment is recognized. Any previously paid search fee and excess claims fee are hereby refunded.

Telephone inquiries should be directed to the Office of Data Management at (571) 272-4200.

Patent Publication Branch
Office of Data Management

UNITED STATES PATENT AND TRADEMARK OFFICE

Commissioner for Patents
United States Patent and Trademark Office
P.O. Box 1450
Alexandria, VA 22313-1450
www.uspto.gov

MAILED

APR 18 2011

OFFICE OF PETITIONS

NIXON PEABODY, LLP
300 S. Riverside Plaza, 16th Floor
CHICAGO IL 60606-6613

In re Application of	:	
Alfred Rosen	:	
Application No. 12/612,830	:	DECISION ON PETITION
Filed: November 5, 2009	:	TO MAKE SPECIAL UNDER
Attorney Docket No. 046354-000002USP1	:	37 CFR 1.102(c)(1)
	:	

This is a decision on the petition under 37 CFR 1.102(c)(1), filed February 25, 2011, to make the above-identified application special based on applicant's age as set forth in M.P.E.P. § 708.02, Section IV.

The petition is **GRANTED.**

A grantable petition to make an application special under 37 CFR 1.102(c)(1) and MPEP § 708.02, Section IV: Applicant's Age must be accompanied by evidence showing that at least one of the applicants is 65 years of age, or more, such as a birth certificate or a statement by applicant. No fee is required

The instant petition includes a statement from the attorney of record declaring that he is in possession of such evidence that proves the applicant is 65 years of age or older. Accordingly, the above-identified application has been accorded "special" status.

Telephone inquiries concerning this decision should be directed to Terri Johnson at 571-272-2991.

All other inquiries concerning either the examination or status of the application should be directed to the Technology Center.

The application is being forwarded to the Technology Center Art Unit 1778 for action on the merits commensurate with this decision.

/Terri Johnson/
Terri Johnson
Petitions Examiner
Office of Petitions

UNITED STATES PATENT AND TRADEMARK OFFICE

Commissioner for Patents
United States Patent and Trademark Office
P.O. Box 1450
Alexandria, VA 22313-1450
www.uspto.gov

BUCHANAN, INGERSOLL
& ROONEY PC
POST OFFICE BOX 1404
ALEXANDRIA VA 22313-1404

MAILED

SEP 08 2010

OFFICE OF PETITIONS

In re Application of :
Karles, et al. : DECISION ON PETITION
Application No. 12/612,881 :
Filed: 5 November, 2009 :
Attorney Docket No. 1021238-000932 :

This is a decision on the petition filed on 8 July, 2010, under 37 C.F.R. §1.47.

The petition pursuant to 37 C.F.R. §1.47(a) is **DISMISSED**.

Rule 47 applicant is given TWO (2) MONTHS from the mailing date of this decision to reply, correcting the below-noted deficiencies. Any reply should be entitled "Request for Reconsideration of Petition Pursuant to 37 C.F.R. §1.47(a)," and should only address the deficiencies noted below, except that the reply may include an oath or declaration executed by the non-signing inventor. **FAILURE TO RESPOND WILL RESULT IN ABANDONMENT OF THE APPLICATION.** Any extensions of time will be governed by 37 C.F.R. §1.136(a).

This is **not** a final agency action within the meaning of 5 U.S.C. §704.

A grantable petition pursuant to 37 C.F.R. §1.47(a) requires: (1) petition and fee; (2) proof that the non-signing inventor cannot be reached or refuses to sign the oath or declaration after having been presented with the application papers (specification: description, claims and drawings); (3) an acceptable oath or declaration in compliance with 35 U.S.C. §§ 115 and 116; and (4) a statement of the last known address of the non-signing inventor(s)—with diligence in the effort to ascertain the validity of the address set forth as the reasonably believed to be last known/current/valid address.

Petitioner does not seem to have worked through the requirements of the petition, as set forth above, in satisfaction of those requirements. (*See, generally:* MPEP §409.03, and §409.03(a)—the applicable statute (35 U.S.C.§ 116).

In particular, Petitioner has not as of this writing satisfied the requirement(s) of the petition as listed above and discussed below.

Petitioners always are reminded that for transmission by Email of any document to be accepted by the Office, written acknowledgment of receipt and readability of the message and all applicable attachments of required materials must be provided.

BACKGROUND

The record reflects as follows:

The application was deposited on 5 November, 2009, without, *inter alia*, a fully executed oath/declaration

On 8 December, 2009, the Office mailed a Notice of Missing Parts requiring, *inter alia*, a fully executed oath/declaration.

On 8 July, 2010, Petitioner Peter K. Skiff (Reg. No.31,917) filed, *inter alia*, a request and fee for extension of time with an oath/declaration executed by co-inventors Karles and Zhuang for themselves and on behalf of non-signing co-inventor Daquing Wu (Mr. Wu); a statement by Danielle Durham (Ms. Durham), averred Sr. Specialist/Intellectual Property of the averred assignee; but no showing whatsoever that the entire application (description, claims, abstract and drawings) were sent to Mr. Wu—rather an express statement by Ms. Durham that she transmitted only the oath/declaration and possibly an assignment document; with no copy of the transmittal letter and no evidence of delivery; and thus no support for the statement by Petitioner and Ms. Durham of the current/valid/reasonably believed to be last known address for the non-signing inventor.

Ms. Durham is not averred to be (and Office records do not reveal her to be) one registered to practice before the Office; thus, she is not presumed to be aware of the statutory, regulatory and policy requirements for the showing herein, as set forth above. Such is not the case of Petitioner, who is registered to practice before the Office, with attendant duties of candor to—with requirement for diligent inquiry before—the Office and to satisfy the Rules of Practice and the guidance in the Commentary at MPEP §409.03, and §409.03(a), et seq.

Petitioner may find it beneficial to step through the requirements of a grantable petition under 37 C.F.R. §1.47(a) (i.e., (1) petition and fee; (2) proof that the non-signing inventor cannot be reached or refuses to sign the oath or declaration after having been presented with the application papers (specification: description, claims and drawings); (3) an acceptable oath or declaration in compliance with 35 U.S.C. §§ 115 and 116; and (4) a statement of the last known address of the non-signing inventor(s)—with diligence in the effort to ascertain the validity of the address set forth as the reasonably believed to be last known/current/valid address) and satisfy himself that he has complied with these requirements on submission of any renewed petition. (*See also*: the guidance in the Commentary at MPEP §409.03, and §409.03(a), et seq.)

Again, Petitioner has not worked through the requirements of the petition.

Thus, the present incompleteness of the record makes granting of the instant petition inappropriate.

The availability of applications and application papers online to applicants/practitioners who diligently associate their Customer Number with the respective application(s) now provides an applicant/practitioner on-demand information as to events/transactions in an application. Thus, now if one wishes to know the progress in and/or status of an application or the accuracy of the data therein, one need only look at the file online.

Out of an abundance of caution, Petitioners always are reminded that those registered to practice *and* all others who make representations before the Office **must** inquire into the underlying facts of representations made to the Office and support averments with the appropriate documentation–since all owe to the Office the continuing duty to disclose.[1]

The instant petition under 37 C.F.R. §1.47(a) is **dismissed**.

Further correspondence with respect to this matter should be addressed as follows:

By mail:
Mail Stop PETITIONS
Commissioner for Patents
Post Office Box 1450
Alexandria, VA 22313-1450

By hand:
Customer Service Window
Mail Stop Petitions
Randolph Building
401 Dulany Street
Alexandria, VA 22314

By FAX:
(571) 273-8300
ATTN: Office of Petitions

[1] See supplement of 17 June, 1999. The Patent and Trademark Office is relying on petitioner's duty of candor and good faith and accepting a statement made by Petitioner. See Changes to Patent Practice and Procedure, 62 Fed. Reg. at 53160 and 53178, 1203 Off. Gaz. Pat. Office at 88 and 103 (responses to comments 64 and 109)(applicant obligated under 37 C.F.R. §10.18 to inquire into the underlying facts and circumstances when providing statements to the Patent and Trademark Office). See specifically, the regulations at 37 C.F.R. §10.18.

While telephone inquiries regarding this decision may be directed to the undersigned at (571) 272-3214—it is noted, however, that all practice before the Office is in writing (see: 37 C.F.R. §1.2[2]) and the proper authority for action on any matter in this regard are the statutes (35 U.S.C.), regulations (37 C.F.R.) and the commentary on policy (MPEP). Therefore, no telephone discussion may be controlling or considered authority for Petitioner's action(s).

/John J. Gillon, Jr./
John J. Gillon, Jr.
Senior Attorney
Office of Petitions

[2] The regulations at 37 C.F.R. §1.2 provide:

§1.2 Business to be transacted in writing.
All business with the Patent and Trademark Office should be transacted in writing. The personal attendance of applicants or their attorneys or agents at the Patent and Trademark Office is unnecessary. The action of the Patent and Trademark Office will be based exclusively on the written record in the Office. No attention will be paid to any alleged oral promise, stipulation, or understanding in relation to which there is disagreement or doubt.

UNITED STATES PATENT AND TRADEMARK OFFICE

Commissioner for Patents
United States Patent and Trademark Office
P.O. Box 1450
Alexandria, VA 22313-1450
www.uspto.gov

BUCHANAN, INGERSOLL
& ROONEY PC
POST OFFICE BOX 1404
ALEXANDRIA VA 22313-1404

MAILED

OCT 04 2010

OFFICE OF PETITIONS

In re Application of :
Karles, et al. : DECISION ON PETITION
Application No. 12/612,881 :
Filed: 5 November, 2009 :
Attorney Docket No. 1021238-000932 :

This is a decision on the petition filed on 16 September, 2010, under 37 C.F.R. §1.47.

The petition pursuant to 37 C.F.R. §1.47(a) is **DISMISSED**.

A grantable petition pursuant to 37 C.F.R. §1.47(a) requires: (1) petition and fee; (2) proof that the non-signing inventor cannot be reached or refuses to sign the oath or declaration after having been presented with the application papers (specification: description, claims and drawings); (3) an acceptable oath or declaration in compliance with 35 U.S.C. §§ 115 and 116; and (4) a statement of the last known address of the non-signing inventor(s)—with diligence in the effort to ascertain the validity of the address set forth as the reasonably believed to be last known/current/valid address.

Petitioners always are reminded that for transmission by Email of any document to be accepted by the Office, written acknowledgment of receipt and readability of the message and all applicable attachments of required materials must be provided.

BACKGROUND

The record reflects as follows:

The application was deposited on 5 November, 2009, without, *inter alia*, a fully executed oath/declaration

On 8 December, 2009, the Office mailed a Notice of Missing Parts requiring, *inter alia*, a fully executed oath/declaration.

On 8 July, 2010, Petitioner Peter K. Skiff (Reg. No.31,917) filed, *inter alia*, a request and fee for extension of time with petition (with fee) pursuant to 37 C.F.R. §1.47(a) an oath/declaration executed by co-inventors Karles and Zhuang for themselves and on behalf of non-signing co-inventor Daquing Wu (Mr. Wu); a statement by Danielle Durham (Ms. Durham), averred Sr. Specialist/Intellectual Property of the averred assignee; but no showing whatsoever that the entire application (description, claims, abstract and drawings) were sent to Mr. Wu—rather an express statement by Ms. Durham that she transmitted only the oath/declaration and possibly an assignment document; with no copy of the transmittal letter and no evidence of delivery; and thus no support for the statement by Petitioner and Ms. Durham of the current/valid/reasonably believed to be last known address for the non-signing inventor. The petition was dismissed on 8 September, 2010.

On 16 September, 2010, Petitioner re-advanced the petition with an averment of the signing/joining of the previously non-signing co-inventor Mr. Wu, and a copy of the signed oath/declaration in support of that averment, in compliance with 37 C.F.R. §1.63—and so evidencing his joinder.

The availability of applications and application papers online to applicants/practitioners who diligently associate their Customer Number with the respective application(s) now provides an applicant/practitioner on-demand information as to events/transactions in an application. Thus, now if one wishes to know the progress in and/or status of an application or the accuracy of the data therein, one need only look at the file online.

Out of an abundance of caution, Petitioners always are reminded that those registered to practice *and* all others who make representations before the Office must inquire into the underlying facts of representations made to the Office and support averments with the appropriate documentation–since all owe to the Office the continuing duty to disclose.[1]

CONCLUSION

The instant petition under 37 C.F.R. §1.47 is **dismissed as moot for joinder**.

In view of the joinder of the inventor, further consideration under 37 C.F.R. §1.47 is not necessary. This application does not have any Rule 1.47 status and no such status should appear on the record for this file. This application should not be returned to this Office for any further consideration under 37 C.F.R. §1.47.

---

[1] See supplement of 17 June, 1999. The Patent and Trademark Office is relying on petitioner's duty of candor and good faith and accepting a statement made by Petitioner. See Changes to Patent Practice and Procedure, 62 Fed. Reg. at 53160 and 53178, 1203 Off. Gaz. Pat. Office at 88 and 103 (responses to comments 64 and 109)(applicant obligated under 37 C.F.R. §10.18 to inquire into the underlying facts and circumstances when providing statements to the Patent and Trademark Office). See specifically, the regulations at 37 C.F.R. §10.18.

Application No. 12/612,881

The instant application is released to the Office of Patent Application Processing (OPAP) for further processing in due course.

While telephone inquiries regarding this decision may be directed to the undersigned at (571) 272-3214—it is noted, however, that all practice before the Office is in writing (see: 37 C.F.R. §1.2[2]) and the proper authority for action on any matter in this regard are the statutes (35 U.S.C.), regulations (37 C.F.R.) and the commentary on policy (MPEP). Therefore, no telephone discussion may be controlling or considered authority for Petitioner's action(s).

/John J. Gillon, Jr./
John J. Gillon, Jr.
Senior Attorney
Office of Petitions

[2] The regulations at 37 C.F.R. §1.2 provide:

§1.2 Business to be transacted in writing.

All business with the Patent and Trademark Office should be transacted in writing. The personal attendance of applicants or their attorneys or agents at the Patent and Trademark Office is unnecessary. The action of the Patent and Trademark Office will be based exclusively on the written record in the Office. No attention will be paid to any alleged oral promise, stipulation, or understanding in relation to which there is disagreement or doubt.

UNITED STATES PATENT AND TRADEMARK OFFICE

Commissioner for Patents
United States Patent and Trademark Office
P.O. Box 1450
Alexandria, VA 22313-1450
www.uspto.gov

LANDO & ANASTASI, LLP
ONE MAIN STREET, SUITE 1100
CAMBRIDGE, MA 02142

MAILED

AUG 18 2010

OFFICE OF PETITIONS

In re Application of	:	
Richard H. Theriault	:	DECISION ON PETITION
Application No. 12/612,887	:	TO WITHDRAW
Filed: November 5, 2009	:	FROM RECORD
Attorney Docket No. S2082-700010	:	

This is a decision on the Request to Withdraw as attorney or agent of record under 37 C.F.R. § 1.36(b), filed on June 30, 2010.

The request is **NOT APPROVED**.

The Office no longer accepts address changes to a new practitioner or law firm filed with requests under 37 C.F.R. § 1.36(b). The Office will only accept correspondence address changes to the most current address information provided for the assignee of the entire interest *who properly became of record under 37 CFR 3.71,* or, if no assignee of the entire interest has properly been made of record, the most current address information provided for the first named inventor. 37 CFR 3.71(c) states:

> *An assignee becomes of record either in a national patent application or a reexamination proceeding by filing a statement in compliance with § 3.73(b) that is signed by a party who is authorized to act on behalf of the assignee.*

All future communications from the Office will be directed to above-listed address until otherwise properly notified by the applicant or a proper change of correspondence address have been submitted. A form for filing Request to Withdraw as attorney or agent of record under 37 C.F.R. § 1.36(b) accompanies this decision

There are no outstanding Office actions that require a reply from the applicant.

Telephone inquires concerning this decision should be directed to the undersigned at (571) 272-6059. All other inquires concerning either the examination or status of the application should be directed to the Technology Center.

A. Kelley

Alicia Kelley
Petitions Examiner
Office of Petitions

Enclosure: Request for Withdrawal as Attorney or Agent and Change Correspondence Address PTO/SB/83

UNITED STATES PATENT AND TRADEMARK OFFICE

Commissioner for Patents
United States Patent and Trademark Office
P.O. Box 1450
Alexandria, VA 22313-1450
www.uspto.gov

LANDO & ANASTASI, LLP
ONE MAIN STREET, SUITE 1100
CAMBRIDGE, MA 02142

MAILED

FEB 18 2011

OFFICE OF PETITIONS

In re Application of	:	
Richard H. Theriault	:	DECISION ON PETITION
Application No. 12/612,887	:	TO WITHDRAW
Filed: November 5, 2009	:	FROM RECORD
Attorney Docket No. S2082-700010	:	

This is a decision on the renewed Request to Withdraw as attorney or agent of record under 37 C.F.R. § 1.36(b), filed February 7, 2011.

The request is **APPROVED**.

A grantable request to withdraw as attorney/agent of record must be signed by every attorney/agent seeking to withdraw or contain a clear indication that one attorney is signing on behalf of another/others. The Office will require the practitioner(s) to certify that he, she or they have: (1) given reasonable notice to the client, prior to the expiration of the reply period, which the practitioner(s) intends to withdraw from employment; (2) delivered to the client or a duly authorized representative of the client all papers and property (including funds) to which the client is entitled; and (3) notified the client of any replies that may be due and the time frame within which the client must respond, pursuant to 37 CFR 10.40 (c).

The request was signed by David M. Roccio on behalf of all the practitioners of record associated with Customer Number 37462.

Customer Number 37462 has been withdrawn as attorney from record. Applicant is reminded that there is no attorney of record at this time.

The correspondence address of record has been changed and the new correspondence address is the address indicated below.

There are no outstanding Office actions that require a reply from the applicant.

Telephone inquires concerning this decision should be directed to the undersigned at (571) 272-6059. All other inquires concerning either the examination or status of the application should be directed to the Technology Center.

A. Kelley

Alicia Kelley
Petitions Examiner
Office of Petitions

cc: RICHARD H. THERIAULT
5 BROOKS HILL ROAD
LINCOLN, MA 01773

UNITED STATES PATENT AND TRADEMARK OFFICE

UNITED STATES DEPARTMENT OF COMMERCE
United States Patent and Trademark Office
Address: COMMISSIONER FOR PATENTS
P.O. Box 1450
Alexandria, Virginia 22313-1450
www.uspto.gov

APPLICATION NUMBER	FILING OR 371(C) DATE	FIRST NAMED APPLICANT	ATTY. DOCKET NO./TITLE
12/612,887	11/05/2009	Richard H. Theriault	S2082-700010

CONFIRMATION NO. 5326

37462
LANDO & ANASTASI, LLP
ONE MAIN STREET, SUITE 1100
CAMBRIDGE, MA 02142

POWER OF ATTORNEY NOTICE

OC000000046057588

Date Mailed: 02/17/2011

NOTICE REGARDING CHANGE OF POWER OF ATTORNEY

This is in response to the Power of Attorney filed 02/07/2011.

- The withdrawal as attorney in this application has been accepted. Future correspondence will be mailed to the new address of record. 37 CFR 1.33.

/atkelley/

Office of Data Management, Application Assistance Unit (571) 272-4000, or (571) 272-4200, or 1-888-786-0101

UNITED STATES PATENT AND TRADEMARK OFFICE

Commissioner for Patents
United States Patent and Trademark Office
P.O. Box 1450
Alexandria, VA 22313-1450
www.uspto.gov

THE LAW OFFICES OF MARK S. KING, P.C.
2018 EASTWOOD ROAD, SUITE #204
WILMINGTON NC 28403

MAILED

NOV 21 2011

OFFICE OF PETITIONS

In re Application of :
KING, et al :
Application No. 12/612,991 : DECISION ON PETITION
Filed: November 5, 2009 : TO WITHDRAW
Attorney Docket No. 2009 11 25 KING : FROM RECORD
:

This is a decision on the Request to Withdraw as attorney or agent under 37 C.F.R. § 1.36(b) filed October 26, 2011.

The request is **NOT APPROVED**.

A review of the file record indicates that Mark Stephen King does not have power of attorney in this patent application. See 37 C.F.R. § 10.40. Accordingly, the request to withdraw under 37 C.F.R. § 1.36(b) is not applicable.

The Office will no longer approve requests from practitioners to withdraw from applications where the requesting practitioner is acting, or has acted, in a representative capacity pursuant to 37 CFR 1.34. In these situations, the practitioner is responsible for the correspondence the practitioner files in the application while acting in a representative capacity. As such, there is no need for the practitioner to obtain the Office's permission to withdraw from representation. However, practitioners acting in a representative capacity, like practitioners who have a power of attorney in the application, remain responsible for noncompliance with 37 CFR 1.56, as well as 37 CFR 10.18, with respect to documents they file.

All future communications from the Office will continue to be directed to the above-identified address until otherwise properly notified.

Telephone inquires concerning this decision should be directed to the undersigned at (571) 272-6735.

/Diane Goodwyn/
Diane Goodwyn
Petitions Examiner
Office of Petitions

cc: VAUGHN M. KING
324 WILMINGTON STREET
RALEIGH NC 27601

UNITED STATES PATENT AND TRADEMARK OFFICE

Commissioner for Patents
United States Patent and Trademark Office
P.O. Box 1450
Alexandria, VA 22313-1450
www.uspto.gov

WENDEROTH, LIND & PONACK, L.L.P.
1030 15th Street NW, Suite 400 East
Washington, DC 20005-1503

MAILED

JAN 13 2011

OFFICE OF PETITIONS

In re Application of :
Akira FUKUDA, et *al.* :
Application No. 12/613,044 : DECISION GRANTING PETITION
Filed: November 5, 2009 : UNDER 37 CFR 1.313(c)(2)
Attorney Docket No. **2009_1746** :

This is a decision on the petition under 37 CFR 1.313(c)(2), filed January 11, 2011, to withdraw the above-identified application from issue after payment of the issue fee.

The petition is **GRANTED**.

The above-identified application is withdrawn from issue for consideration of a submission under 37 CFR 1.114 (request for continued examination). *See* 37 CFR 1.313(c)(2).

Petitioner is advised that the issue fee paid on December 27, 2010 cannot be refunded. If, however, this application is again allowed, petitioner may request that it be applied towards the issue fee required by the new Notice of Allowance.[1]

Telephone inquiries should be directed to the undersigned at (571) 272-7253.

This application is being referred to Technology Center AU 3723 for processing of the request for continued examination under 37 CFR 1.114 and for consideration of the concurrently filed information disclosure statement.

/Monica A. Graves/
Petitions Examiner, Office of Petitions

[1] *The request to apply the issue fee to the new Notice may be satisfied by completing and returning the new Part B – Fee(s) Transmittal Form (along with any balance due at the time of submission). Petitioner is advised that the Issue Fee Transmittal Form* ***must*** *be completed and timely submitted to avoid abandonment of the application.*

UNITED STATES PATENT AND TRADEMARK OFFICE

UNITED STATES DEPARTMENT OF COMMERCE
United States Patent and Trademark Office
Address: COMMISSIONER FOR PATENTS
P.O. Box 1450
Alexandria, Virginia 22313-1450
www.uspto.gov

APPLICATION NO.	FILING DATE	FIRST NAMED INVENTOR	ATTORNEY DOCKET NO.	CONFIRMATION NO.
12/613,084	11/05/2009	Ming Xu	321.129/US	5661

40842 7590 09/16/2010

B. CRAIG KILLOUGH
P. O. DRAWER H
CHARLESTON, SC 29402

EXAMINER	
ART UNIT	PAPER NUMBER
1785	

MAIL DATE	DELIVERY MODE
09/16/2010	PAPER

Please find below and/or attached an Office communication concerning this application or proceeding.

The time period for reply, if any, is set in the attached communication.

UNITED STATES PATENT AND TRADEMARK OFFICE

Commissioner for Patents
United States Patent and Trademark Office
P.O. Box 1450
Alexandria, VA 22313-1450
www.uspto.gov

SEP 16 2010

CT

In re application of Ming Xu et al Serial No. 12/613,084 Filed: November 5, 2009 For: IMAGE RECEIVER MEDIA AND PRINTING PROCESS	: : : : : :	DECISION ON REQUEST TO PARTICIPATE IN PATENT PROSECUTION HIGHWAY PROGRAM AND PETITION TO MAKE SPECIAL UNDER 37 CFR 1.102(d)

This is a decision on the request to participate in the PCT Patent Prosecution Highway (PCT-PPH) pilot program and the petition under 37 CFR 1.102(a), filed July 14, 2010, to make the above-identified application special.

The request and petition are **GRANTED**.

A grantable request to participate in the PCT-PPH pilot program and petition to make special require:

(1) The U.S. application must disclose an eligible relationship to one or more PCT applications where the ISA or IPEA are the JPO, EPO, USPTO or KIPO;

(2) At least one claim in the PCT application has novelty, inventive step, and industrial applicability and must be free of any observations in Box VIII in the latest work product in the international stage or applicant must identify and explain why the claim(s) is/are not subject to the observation in Box VIII;

(3) Applicant must submit a copy of the claim(s) from the PCT application(s) that have novelty, inventive step, and industrial applicability along with an English translation thereof and a statement that the English translation is accurate, if the claims are not in the English language;

(4) Applicant must submit a claims correspondence table in English and all the independent claims in the U.S. application must sufficiently correspond or be amended to sufficiently correspond to the claim(s) that have novelty, inventive step, and industrial applicability in the PCT application(s);

(5) Examination of the U.S. application has not begun;

(6) Applicant must submit a copy of the latest international work product from the PCT application indicating that the claim(s) have novelty, inventive step, and industrial

applicability along with an English translation thereof if the latest international work product is not in the English language;

(7) Applicant must submit an IDS listing the documents cited by the PCT examiner in the international work product along with copies of documents except U.S. patents or U.S. patent application publications; and

The request to participate in the PPH program and petition comply with the above requirements. Accordingly, the above-identified application has been accorded "special" status.

The application is being forwarded to the examiner for action on the merits commensurate with this decision.

Any inquiry regarding this decision should be directed to Christine Tierney, Quality Assurance Specialist, at (571) 272-1055.

All other inquiries concerning the examination or status of the application is accessible in the PAIR system at http://www.uspto.gov/ebc/index.html.

/Christine Tierney/

Christine Tierney
Quality Assurance Specialist
Technology Center 1700

UNITED STATES PATENT AND TRADEMARK OFFICE

UNITED STATES DEPARTMENT OF COMMERCE
United States Patent and Trademark Office
Address: COMMISSIONER FOR PATENTS
P.O. Box 1450
Alexandria, Virginia 22313-1450
www.uspto.gov

APPLICATION NO.	FILING DATE	FIRST NAMED INVENTOR	ATTORNEY DOCKET NO.	CONFIRMATION NO.
12/613,099	11/05/2009	Daiji FURUHASHI	MNL-2018-2418	5682

7590 01/27/2012

NIXON & VANDERHYE, PC
901 NORTH GLEBE ROAD, 11TH FLOOR
ARLINGTON, VA 22203

EXAMINER
JACOBS, TODD D

ART UNIT	PAPER NUMBER
3746	

NOTIFICATION DATE	DELIVERY MODE
01/27/2012	ELECTRONIC

DECISION GRANTING PETITION UNDER 37 CFR 1.138(d)

The declaration of express abandonment is recognized

This is in response to the petition under 37 CFR 1.138(d), requesting for a refund of any previously paid search fee and excess claims fee in the above-identified application.

The petition is granted.

The express abandonment is recognized. Any previously paid search fee and excess claims fee are hereby refunded.

Telephone inquiries should be directed to the Office of Data Management at (571) 272-4200.

Patent Publication Branch
Office of Data Management

UNITED STATES PATENT AND TRADEMARK OFFICE

COMMISSIONER FOR PATENTS
UNITED STATES PATENT AND TRADEMARK OFFICE
P.O. BOX 1450
ALEXANDRIA, VA 22313-1450
www.uspto.gov

Paper No.

PHILIP S. JOHNSON
JOHNSON & JOHNSON
ONE JOHNSON & JOHNSON PLAZA
NEW BRUNSWICK NJ 08933-7003

MAILED

FEB 17 2011

OFFICE OF PETITIONS

In re Application of :
Yoav Lichtenstein : DECISION ON PETITION
Application No. 12/613,109 :
Filed: November 5, 2009 :
Atty Docket No. BIO5210USNP :

This is a decision on the PETITION FOR REVIVAL OF AN APPLICATION FOR PATENT ABANDONED UNINTENTIONALLY UNDER 37 CFR 1.137(b) filed November 10, 2010.

The petition is **GRANTED**.

The above-identified application became abandoned for failure to properly reply to the Notice to File Missing Parts of Application mailed November 18, 2009. The Notice set a period for reply of two (2) months from the mail date of the Notice to supply a signed oath or declaration, the late surcharge and replacement drawings. A reply, a signed declaration and late surcharge, was filed on November 25, 2009. However, by Notice mailed December 3, 2009, applicant was advised that the reply was incomplete as it did not include replacement drawings. A further reply, another copy of the signed declaration and late surcharge[1], were filed on January 28, 2010. Accompanying this reply was an extension of time for response within the first month, including the required extension fee. As no further extension of time was obtained and no replacement drawings were filed, the above-identified application became abandoned on February 19, 2010. A courtesy Notice of Abandonment was mailed on November 9, 2010.

[1] The duplicate payment of the late surcharge is being refunded as an overpayment.

Petitioner has satisfied the requirements of 37 CFR 1.137(b). The petition included the required reply in the form of replacement drawings; the petition fee of $1620; and the required statement of unintentional delay.

The application is being forwarded to the Office of Patent Application Processsing for completion of pre-examination processing, including processing of the response submitted on petition filed November 10, 2010.

Telephone inquiries specific to this decision should be directed to the undersigned at (571) 272-3219.

Nancy Johnson
Senior Petitions Attorney
Office of Petitions

Doc Code: PET.RELIEF
Document Description: Certification and Request for Japan Events Relief

PTO/SB/425 (03-11)

CERTIFICATION AND REQUEST FOR RELIEF DUE TO EVENTS OF MARCH 11, 2011, IN JAPAN (Page 1 of 2)

Nonprovisional Application Number or Control Number (if applicable):	Patent Number (if applicable):
12/613,255	
First Named Inventor:	Title of Invention:
Tomoyuki ASANO, et al.	Information Recording/Reproducing Apparatus and Method

APPLICANT/PATENTEE/REEXAMINATION PARTY HEREBY CERTIFIES AND REQUESTS THE FOLLOWING FOR THE ABOVE-IDENTIFIED APPLICATION/PATENT/REEXAMINATION PROCEEDING.

1. FOR PATENT APPLICATIONS AND REEXAMINATION PROCEEDINGS PENDING IN THE USPTO AS OF MARCH 11, 2011, IN WHICH A COMMUNICATION FROM THE USPTO IS SOUGHT TO BE REMAILED:

   a. One or more inventors, an assignee, or a correspondence address (for the application/proceeding) is in an area of Japan affected by the earthquake and/or tsunami of March 11, 2011.

   b. A reply or response to an Office action (final, non-final, or other), a notice of allowance, or other Office notice (hereinafter collectively referred to as "Office communication") is outstanding.

   c. The statutory or non-statutory time period set for response has not yet expired.

   d. Withdrawal and reissuance of the Office communication is requested.

   e. It is acknowledged that if this request is not made within sufficient time so that withdrawal and reissuance of the Office communication occur prior to expiration of the statutory or non-statutory time period (as permitted to be extended under 37 CFR 1.136(a), or as extended under 37 CFR 1.550(c) or 1.956), this request may not be granted.

   f. The need for the reissuance of the Office communication was due to the effects of the earthquake and/or tsunami of March 11, 2011.

   g. This request is being sent via EFS-Web or by mail directed to Mail Stop Petition, Commissioner for Patents, P.O. Box 1450, Alexandria, VA 22313-1450.

2. FOR PATENTEES WHO WERE UNABLE TO TIMELY PAY A PATENT MAINTENANCE FEE DURING THE SIX-MONTH GRACE PERIOD FOLLOWING THE WINDOW TO PAY THE MAINTENANCE FEE:

   a. The original window of time to pay the maintenance fee without the surcharge required by 37 CFR 1.20(h) expired on or after March 11, 2011.

   b. The delay in paying the fee was due to the effects of the earthquake and/or tsunami of March 11, 2011.

   c. The USPTO is requested to *sua sponte* waive the surcharge in 37 CFR 1.20(h) for paying a maintenance fee during the six-month grace period following the window to pay the maintenance fee.

   d. This request and payment of the maintenance fee during the six-month grace period following the window to pay the maintenance fee is being mailed to: Director of the United States Patent and Trademark Office, Attn: Maintenance Fee, 2051 Jamieson Avenue, Suite 300, Alexandria, VA 22314; or being transmitted via facsimile to: 571-273-6500.

CERTIFICATION AND REQUEST FOR RELIEF DUE TO EVENTS OF MARCH 11, 2011, IN JAPAN (Page 2 of 2)

3. FOR PATENTEES WHO NEED TO FILE A PETITION TO ACCEPT A DELAYED MAINTENANCE FEE PAYMENT UNDER 37 CFR 1.378(c):

   a. The maintenance fee payment was required to have been paid after March 10, 2011.

   b. A petition under 37 CFR 1.378(c) (using USPTO form PTO/SB/66 – Petition to Accept Unintentionally Delayed Payment of Maintenance Fee in an Expired Patent (37 CFR 1.378(c))) is being promptly filed accompanied by the applicable maintenance fee payment (but not the surcharge under 37 CFR 1.20(i)).

   c. The delay in payment of the maintenance fee was due to the effects of the earthquake and/or tsunami of March 11, 2011.

   d. The USPTO is requested to *sua sponte* waive the surcharge in 37 CFR 1.20(i) for accepting a delayed maintenance fee payment.

   e. It is acknowledged that the petition to accept a delayed maintenance fee payment under 37 CFR 1.378(c) must be filed by March 11, 2012, in order to be entitled to a waiver of the surcharge under 37 CFR 1.20(i).

   f. It is acknowledged that the petition to accept a delayed maintenance fee payment under 37 CFR 1.378(c) must be filed within twenty-four months from the expiration date of the patent. *See* 35 U.S.C 41(c).

   g. This request and the petition to accept a delayed maintenance fee payment under 37 CFR 1.378(c) is being submitted via EFS-Web or by mail directed to Mail Stop Petition, Commissioner for Patents, P.O. Box 1450, Alexandria, VA 22313-1450.

4. FOR NONPROVISIONAL PATENT APPLICATIONS FILED WITHOUT AN EXECUTED OATH OR DECLARATION OR PAYMENT OF THE BASIC FILING FEE, SEARCH FEE, AND/OR EXAMINATION FEE:

   a. The nonprovisional patent application was filed on or after March 11, 2011, and prior to April 12, 2011.

   b. The late filing of the oath or declaration or the basic filing fee, search fee, or examination fee was due to the effects of the earthquake and/or tsunami of March 11, 2011.

   c. The USPTO is requested to *sua sponte* waive the surcharge set forth in 37 CFR 1.16(f) for the late filing of the oath or declaration or basic filing fee, search fee, and/or examination fee.

   d. This request, together with the executed oath or declaration or the basic filing fee, search fee, or examination fee, as well as the reply to the Notice to File Missing Parts, is being submitted via EFS-Web or by mail directed to Mail Stop Missing Parts, Commissioner for Patents, P.O. Box 1450, Alexandria, VA 22313-1450.

Signature Kurt M. Berger	Date 4-28-11
Name (Print/Typed) Kurt M. Berger, Ph.D.	Practitioner Registration Number 51,461

***Note**: Signatures of all the inventors, § 1.41(b) applicants, or assignees of record of the entire interest or their representative(s), or reexamination requesters at the appeal stage are required in accordance with 37 CFR 1.33 and 11.18. Please see 37 CFR 1.4(d) for the form of the signature. If necessary, submit multiple forms for more than one signature, see below*.*

■ *Total of 1 forms are submitted.

UNITED STATES PATENT AND TRADEMARK OFFICE

Commissioner for Patents
United States Patent and Trademark Office
P.O. Box 1450
Alexandria, VA 22313-1450
www.uspto.gov

OBLON, SPIVAK, MCCLELLAND MAIER & NEUSTADT, L.L.P.
1940 DUKE STREET
ALEXANDRIA VA 22314

MAILED

MAY 04 2011

OFFICE OF PETITIONS

In re Application of
Asano et al.
Application No. 12/613,255
Filed: November 5, 2009
Attorney Docket No. 350137US8 DIV

DECISION ON PETITION

This is a decision on the request filed April 28, 2011, seeking relief under the provisions of "Relief Available to Patent and Trademark Applicants, Patentees and Trademark Owners Affected by the Catastrophic Events of March 11, 2011 in Japan," 1365 Off. Gaz. Pat. Office 170 (April 19, 2011).

The request for relief is **GRANTED**.

In the above-identified application, an Office action was mailed on November 30, 2010. The instant petition was filed prior to the expiration of the period for reply and the certifications for granting of relief are considered to be met by the submission of the request.

Telephone inquires concerning this decision should be directed to the undersigned at 571-272-7751. All other inquires concerning either the examination or status of the application should be directed to the Technology Center.

This application is being referred to the Technology Center, Art Unit 2435 for re-mailing the Office action of November 30, 2010. The period for reply will run from the mailing date of the Office action.

/Joan Olszewski/
Joan Olszewski
Petitions Examiner
Office of Petitions

Doc Code: PPH.PCT.652
Document Description: Petition to make special under PCT-Patent Pros Hwy

PTO/SB/20PCT-KR (06-10)
Approved for use through 01/31/2012. OMB 0651-0058
U.S. Patent and Trademark Office; U. S. DEPARTMENT OF COMMERCE
Under the Paperwork Reduction Act of 1995, no persons are required to respond to a collection of information unless it displays a valid OMB control number.

REQUEST FOR PARTICIPATION IN THE PATENT COOPERATION TREATY - PATENT PROSECUTION HIGHWAY (PCT-PPH) PILOT PROGRAM BETWEEN THE KOREAN INTELLECTUAL PROPERTY OFFICE (KIPO) AND THE USPTO

Application No:	12/613,262 (048559-0016)	Filing date:	November 5, 2009
First Named Inventor:	Steven B. Gold		
Title of the Invention:	METHOD AND SYSTEM TO CONTROL AND ENHANCE PRESCRIBING AND DISPENSING OF MEDIC		

THIS REQUEST FOR PARTICIPATION IN THE PCT-PPH PILOT PROGRAM ALONG WITH THE REQUIRED DOCUMENTS MUST BE SUBMITTED VIA EFS-WEB. INFORMATION REGARDING EFS-WEB IS AVAILABLE AT HTTP://WWW.USPTO.GOV/EBC/EFS_HELP.HTML

APPLICANT HEREBY REQUESTS PARTICIPATION IN THE PCT-PPH PROGRAM AND PETITIONS TO MAKE THE ABOVE-IDENTIFIED APPLICATION SPECIAL UNDER THE PCT-PPH PROGRAM.

The above-identified application is (1) a national stage entry of the corresponding PCT application, or (2) a national stage entry of another PCT application which claims priority to the corresponding PCT application, or (3) a national application that claims domestic/ foreign priority to the corresponding PCT application, or (4) a national application which forms the basis for the priority claim in the corresponding PCT application, or (5) a continuing application of a U.S. application that satisfies one of (1) to (4) above, or (6) a U.S. application that claims domestic benefit to a U.S. provisional application which forms the basis for the priority claim in the corresponding PCT application.

The corresponding PCT application number(s) is/are: PCT/US2009/063429. Both present US application and the PCT application claim priority to provisional application numbers 61/213,014 and 61/198,322, (diagram E2 in the PPH-PCT notice).

The international date of the corresponding PCT application(s) is/are: November 5, 2009

I. List of Required Documents:

a. **A copy of the latest international work product (WO/ISA, WO/IPEA, or IPER) in the above-identified corresponding PCT application(s)**

☒ Is attached.

☐ Is not attached because the document is already in the U.S. application.

b. **A copy of all claims which were indicated as having novelty, inventive step and industrial applicability in the above-identified corresponding PCT application(s).**

☒ Is attached.

☐ Is not attached because the document is already in the U.S. application.

c. **English translations of the documents in a. and b. above are attached (if the documents are not in the English language). A statement that the English translation is accurate is attached for the document in b. above.**

This collection of information is required by 35 U.S.C. 119, 37 CFR 1.55, and 37 CFR 1.102(d). The information is required to obtain or retain a benefit by the public, which is to file (and by the USPTO to process) an application. Confidentiality is governed by 35 U.S.C. 122 and 37 CFR 1.11 and 1.14. This collection is estimated to take 2 hours to complete, including gathering, preparing, and submitting the completed application form to the USPTO. Time will vary depending upon the individual case. Any comments on the amount of time you require to complete this form and/or suggestions for reducing this burden should be sent to the Chief Information Officer, U.S. Patent and Trademark Office, U.S. Department of Commerce, P.O. Box 1450, Alexandria, VA 22313-1450. DO NOT SEND FEES OR COMPLETED FORMS TO THIS ADDRESS.

Approved for use through 01/31/2012. OMB 0651-0058
U.S.Patent and Trademark Office; U.S. DEPARTMENT OF COMMERCE

Under the Paperwork Reduction Act of 1995, no persons are required to respond to a collection of information unless it displays a valid OMB control number.

REQUEST FOR PARTICIPATION IN THE PCT-PPH PILOT PROGRAM BETWEEN THE KIPO AND THE USPTO

(continued)

Application No.:	12/613,262
First Named Inventor:	Steven B. Gold

d. **(1) An information disclosure statement listing the documents cited in the international work products (ISR, WO/ISA, WO/IPEA, IPER) of the corresponding PCT application.**

☐ Is attached

☒ Has already been filed in the above-identified U.S. application on September 22, 2010

(2) Copies of all documents (except) for U.S. patents or U.S. patent application publications)

☐ Are attached.

Have already been filed in the above-identified U.S. application on September 22, 2010

II. Claims Correspondence Table:

Claims in US Application	Patentable Claims in the corresponding PCT Application	Explanation regarding the correspondence
1-28	1-28	Same

III. All the claims in the US application sufficiently correspond to the patentable claims in the corresponding PCT application.

Signature	Date September 22, 2010
Name (Print/Typed) Aamer S. Ahmed	Registration Number 58,958

Privacy Act Statement

The **Privacy Act of 1974 (P.L. 93-579)** requires that you be given certain information in connection with your submission of the attached form related to a patent application or patent. Accordingly, pursuant to the requirements of the Act, please be advised that: (1) the general authority for the collection of this information is 35 U.S.C. 2(b)(2); (2) furnishing of the information solicited is voluntary; and (3) the principal purpose for which the information is used by the U.S. Patent and Trademark Office is to process and/or examine your submission related to a patent application or patent. If you do not furnish the requested information, the U.S. Patent and Trademark Office may not be able to process and/or examine your submission, which may result in termination of proceedings or abandonment of the application or expiration of the patent.

The information provided by you in this form will be subject to the following routine uses:

1. The information on this form will be treated confidentially to the extent allowed under the Freedom of Information Act (5 U.S.C. 552) and the Privacy Act (5 U.S.C 552a). Records from this system of records may be disclosed to the Department of Justice to determine whether disclosure of these records is required by the Freedom of Information Act.
2. A record from this system of records may be disclosed, as a routine use, in the course of presenting evidence to a court, magistrate, or administrative tribunal, including disclosures to opposing counsel in the course of settlement negotiations.
3. A record in this system of records may be disclosed, as a routine use, to a Member of Congress submitting a request involving an individual, to whom the record pertains, when the individual has requested assistance from the Member with respect to the subject matter of the record.
4. A record in this system of records may be disclosed, as a routine use, to a contractor of the Agency having need for the information in order to perform a contract. Recipients of information shall be required to comply with the requirements of the Privacy Act of 1974, as amended, pursuant to 5 U.S.C. 552a(m).
5. A record related to an International Application filed under the Patent Cooperation Treaty in this system of records may be disclosed, as a routine use, to the International Bureau of the World Intellectual Property Organization, pursuant to the Patent Cooperation Treaty.
6. A record in this system of records may be disclosed, as a routine use, to another federal agency for purposes of National Security review (35 U.S.C. 181) and for review pursuant to the Atomic Energy Act (42 U.S.C. 218(c)).
7. A record from this system of records may be disclosed, as a routine use, to the Administrator, General Services, or his/her designee, during an inspection of records conducted by GSA as part of that agency's responsibility to recommend improvements in records management practices and programs, under authority of 44 U.S.C. 2904 and 2906. Such disclosure shall be made in accordance with the GSA regulations governing inspection of records for this purpose, and any other relevant (*i.e.*, GSA or Commerce) directive. Such disclosure shall not be used to make determinations about individuals.
8. A record from this system of records may be disclosed, as a routine use, to the public after either publication of the application pursuant to 35 U.S.C. 122(b) or issuance of a patent pursuant to 35 U.S.C. 151. Further, a record may be disclosed, subject to the limitations of 37 CFR 1.14, as a routine use, to the public if the record was filed in an application which became abandoned or in which the proceedings were terminated and which application is referenced by either a published application, an application open to public inspection or an issued patent.
9. A record from this system of records may be disclosed, as a routine use, to a Federal, State, or local law enforcement agency, if the USPTO becomes aware of a violation or potential violation of law or regulation.

Claims

1. A machine implemented method for controlling the dispensation of a drug to a patient comprising the steps of:

(a) providing the patient with a first prescription for a drug,

(b) entering patient data and drug information into a database comprising a national patient registry, and dispensing the drug and a drug test kit to the patient,

(c) submitting test kit data from the patient test kit to a centralized data collection center,

(d) analyzing the patient test kit data, sending an analysis report to the patient's physician, and storing electronically the outcome the analysis report into the national patient registry database,

(e) determining whether the patient should receive a second prescription of the drug, a modified prescription of the drug, or no subsequent prescription of the drug based on the analysis report, and

(g) restricting dispensation of the second prescription or modified prescription based on the analysis report.

2. The method of claim 1 wherein the drug information comprises information sufficient to identify the drug and its labeler, strength and dosage form.

3. The method of claim 2 wherein the drug information comprises a portion of the drug's National Drug Code Number (NDC #).

4. The method of claim 1, wherein the test kit data comprises patient drug response information and side effect information.

5. The method of claim 1, wherein said analysis report is accessed electronically.

6. The method of claim 1, wherein the physician diagnoses a patient's illness based on said analysis report.

7. The method of claim 1, wherein step (d) further comprises comparing the patient kit data to efficacy data stored in the national patient drug registry database for the drug and determining the effectiveness of the drug in the patient.

8. The method of claim 7, further comprising a step (h) wherein dispensation of the refill is restricted if the outcome of the analysis report does not indicate that the drug is effective.

9. The method of claim 7, wherein the drug effectiveness is further determined by evaluating the patient kit data for serious side effects.

10. The method of claim 1 wherein, the method is repeated if a refill or modified refill is prescribed.

11. The method of claim 1, wherein dispensation of the drug is blocked if the test kit data is not submitted within a predetermined time.

12. The method of claim 11, wherein the predetermined time is 1 month after completion of the prescription course.

13. The method of claim 1, wherein the national patient registry stored on a computer readable medium and is accessible by dispensing pharmacies.

14. The method of claim 1, wherein the drug is associated with serious side effects.

15. The method of claim 14, wherein the drug is a black box drug.

16. A machine-implemented method for restricting refills of a prescription drug to a patient comprising:

a) using a computer for analyzing data submitted by the patient to a national patient registry database after the patient takes the prescription drug and preparing an analysis report indicating the effectiveness of the drug in the patient,

b) providing a refill prescription of the drug, a modified refill prescription of the drug with a patient test kit, or no prescription of the drug based on the analysis report,

c) restricting dispensation of the drug refill if the refill or modified refill prescription is not in accordance with the analysis report.

17. The method of claim 16, wherein the analysis report is stored in the national patient registry database and stored on a computer readable medium.

18. The method of claim 17, wherein the national patient registry database is accessible by dispensing pharmacies.

19. The method of claim 16, wherein the patient submitted data comprises patient drug response information and side effect information.

20. The method of claim 19, further comprising a step of comparing the patient submitted data to efficacy data stored in the national patient drug registry database for the drug and determining whether the drug is effective in the patient.

21. The method of claim 20, wherein dispensation of the refill is restricted in step (c) if the analysis report does not indicate that the drug is effective.

22. The method of claim 19, wherein the drug effectiveness is further determined by evaluating the patient submitted data for serious side effects.

23. The method of claim 16 wherein, the method is repeated if a refill or modified refill is prescribed.

24. The method of claim 16, further comprising a step of blocking refills of the prescription drug if the patient does not submit the data within a predetermined period of time.

25. The method of claim 16, wherein the drug is associated with serious side effects.

26. The method of claim 25, wherein the drug is a black box drug.

27. A pharmacy dispensation control system comprising:

a national patient registry stored on a computer readable medium comprising patient identifying information, a national drug code number for each drug prescribed to a patient, and data submitted by the patient after using the prescription drug, and

a computer programmed to generate an analysis report based in part on the national drug code and data submitted by a patient after using the prescribed drug, and a report restricting the dispensation of a refill prescription of the drug generated in response to the refill prescription not being in accordance with the analysis report.

28. A machine implemented method for controlling dispensation of a drug to a patient comprising the steps of:

providing the patient with a first prescription for a drug,

entering patient data and a drug information into database comprising a national patient registry, and dispensing the drug to the patient, and

restricting dispensation of a refill prescription to patients in the national patient registry.

PCT/US2009/063429

PATENT COOPERATION TREATY

From the INTERNATIONAL SEARCHING AUTHORITY

RECEIVED
AUG 02 2010
McDermott Will & Emery LLP
DC Office

To:

BECKER STEPHEN A.

MCDERMOTT WILL & EMERY LLP 600 13TH STREET, N.W. WASHINGTON DC 20005-3096 USA

PCT

NOTIFICATION OF TRANSMITTAL OF THE INTERNATIONAL SEARCH REPORT AND THE WRITTEN OPINION OF THE INTERNATIONAL SEARCHING AUTHORITY, OR THE DECLARATION

(PCT Rule 44.1)

	Date of mailing *(day/month/year)* 28 JULY 2010 (28.07.2010)
Applicant's or agent's file reference 048559-0017	**FOR FURTHER ACTION** See paragraphs 1 and 4 below
International application No. **PCT/US2009/063429**	International filing date *(day/month/year)* **05 NOVEMBER 2009 (05.11.2009)**
Applicant **GOLD STEPHEN B. et al**	

1. ☒ The applicant is hereby notified that the international search report and the written opinion of the International Searching Authority have been established and are transmitted herewith.

   Filing of amendments and statement under Article 19:

   The applicant is entitled, if he so wishes, to amend the claims of the international application (see Rule 46):

   When? The time limit for filing such amendments is normally two months from the date of transmittal of the international search report.

   Where? Directly to the International Bureau of WIPO, 34 chemin des Colombettes 1211 Geneva 20, Switzerland, Facsimile No.: +41 22 338 82 70

   For more detailed instructions, see *PCT Applicant's Guide*, International Phase, paragraphs 9.004 . 9.011.

2. ☐ The applicant is hereby notified that no international search report will be established and that the declaration under Article 17(2)(a) to that effect and the written opinion of the International Searching Authority are transmitted herewith.

3. ☐ **With regard to any protest** against payment of (an) additional fee(s) under Rule 40.2, the applicant is notified that:

   ☐ the protest together with the decision thereon has been transmitted to the International Bureau together with any request to forward the texts of both the protest and the decision thereon to the designated Offices.

   ☐ no decision has been made yet on the protest; the applicant will be notified as soon as a decision is made.

4. **Reminders**

The applicant may submit comments on an informal basis on the written opinion of the International Searching Authority to the International Bureau. The International Bureau will send a copy of such comments to all designated Offices unless an international preliminary examination report has been or is to be established. Following the expiration of 30 months from the priority date, these comments will also be made available to the public.

Shortly after the expiration of **18 months** from the priority date, the international application will be published by the International Bureau. If the applicant wishes to avoid or postpone publication, a notice of withdrawal of the international application, or of the priority claim, must reach the International Bureau before the completion of the technical preparations for international publication (Rules 90bis.1 and 90bis.3).

Within **19 months** from the priority date, but only in respect of some designated Offices, a demand for international preliminary examination must be filed if the applicant wishes to postpone the entry into the national phase **until 30 months** from the priority date (in some Offices even later); otherwise, the applicant must, **within 20 months** from the priority date, perform the prescribed acts for entry into the national phase before those designated Offices. In respect of other designated Offices, the time limit of **30 months** (or later) will apply even if no demand is filed within 19months.

For details about the applicable time limits, Office by Office, see www.wipo.int/pct/en/texts/time_limits.html and the PCT Applicant's Guide, National Chapters.

Name and mailing address of the ISA/KR Korean Intellectual Property Office Government Complex-Daejeon, 139 Seonsa-ro, Seo-gu, Daejeon 302-701, Republic of Korea Facsimile No. 82-42-472-7140	Authorized officer COMMISSIONER Telephone No. 82-42-481-8752

* Attention

Copies of the documents cited in the international search report can be searched in the following Korean Intellectual Property Office English website for three months from the date of mailing of the international search report.

http://www.kipo.go.kr/en/ => Patent Search => PCT-Service

ID : PCT international application number
PW : **NALC5GSM**

Inquiries related to PCT International Search Report or Written Opinion prepared by KIPO as an International Searching Authority can be answered not only by KIPO but also through IPKC (Intellectual Property Korea Center), located in Vienna, VA, which functions as a PCT Help Desk for PCT applicants.

Homepage: http://www.ipkcenter.com
Email: ipkc@ipkcenter.com
Phone: +1 703 388 1066
Fax: +1 703 388 1084

PATENT COOPERATION TREATY

PCT

INTERNATIONAL SEARCH REPORT

(PCT Article 18 and Rules 43 and 44)

Applicant's or agent's file reference	**FOR FURTHER ACTION**	see Form PCT/ISA/220 as well as, where applicable, item 5 below.
048559-0017		
International application No.	International filing date *(day/month/year)*	(Earliest) Priority Date *(day/month/year)*
PCT/US2009/063429	**05 NOVEMBER 2009 (05.11.2009)**	05 NOVEMBER 2008 (05.11.2008)
Applicant		
GOLD STEPHEN B. et al		

This International search report has been prepared by this International Searching Authority and is transmitted to the applicant according to Article 18. A copy is being transmitted to the International Bureau.

This international search report consists of a total of 6 sheets.

☒ It is also accompanied by a copy of each prior art document cited in this report.

1. **Basis of the report**
   a. With regard to the **language**, the international search was carried out on the basis of:
      ☒ the international application in the language in which it was filed
      ☐ a translation of the international application into _____, which is the language of a translation furnished for the purposes of international search (Rules 12.3(a) and 23.1(b))
   b. ☐ This international search report has been established taking into account the **rectification of an obvious mistake** authorized by or notified to this Authority under Rule 91 (Rule 43.6*bis*(a)).
   c. ☐ With regard to any **nucleotide and/or amino acid sequence** disclosed in the international application, see Box No. I.
2. ☐ **Certain claims were found unsearchable** (See Box No. II)
3. ☐ **Unity of invention is lacking** (See Box No. III)
4. With regard to the **title,**
   ☒ the text is approved as submitted by the applicant.
   ☐ the text has been established by this Authority to read as follows:

5. With regard to the **abstract,**
   ☒ the text is approved as submitted by the applicant.
   ☐ the text has been established, according to Rule 38.2, by this Authority as it appears in Box No. IV. The applicant may, within one month from the date of mailing of this international search report, submit comments to this Authority.

6. With regard to the drawings,
   a. the figure of the **drawings** to be published with the abstract is Figure No. 1
      ☒ as suggested by the applicant.
      ☐ as selected by this Authority, because the applicant failed to suggest a figure.
      ☐ as selected by this Authority, because this figure better characterizes the invention.
   b. ☐ none of the figure is to be published with the abstract.

INTERNATIONAL SEARCH REPORT

International application No.
PCT/US2009/063429

A. CLASSIFICATION OF SUBJECT MATTER

A61J 7/04(2006.01)i, A61J 7/00(2006.01)i, G06F 19/00(2006.01)i

According to International Patent Classification (IPC) or to both national classification and IPC

B. FIELDS SEARCHED

Minimum documentation searched (classification system followed by classification symbols)

IPC A61J, G06F

Documentation searched other than minimum documentation to the extent that such documents are included in the fields searched

Korean utility models and applications for utility models

Japanese utility models and applications for utility models

Electronic data base consulted during the international search (name of data base and, where practicable, search terms used)

eKOMPASS(KPA, PAJ, FPD, USPATFULL) in KIPO, CA online, google & keywords: dispensation, drug, pharmacy, implementation, computer, national drug code number(NDC #), serious adverse effects(SAE), black box drug

C. DOCUMENTS CONSIDERED TO BE RELEVANT

Category*	Citation of document, with indication, where appropriate, of the relevant passages	Relevant to claim No.
A	US 07304913 B2 (NIEMIEC et al.) 04 December 2007 See the abstract; figures 1-6D; claims 1-10	1-28
A	US 06315720 B1 (WILLIAMS et al.) 13 November 2001 See the abstract; claims 1-32	1-28
A	US 2007-0260491 A1 (PALMER et al.) 08 November 2007 See the abstract; figure 1; claims 1-55	1-28
A	US 2006-0206066 A1 (FEREK-PETRIC) 14 September 2006 See the abstract; figures 1, 4, 6; claims 1-21	1-28

☒ Further documents are listed in the continuation of Box C. ☒ See patent family annex.

* Special categories of cited documents:

"A" document defining the general state of the art which is not considered to be of particular relevance

"E" earlier application or patent but published on or after the international filing date

"L" document which may throw doubts on priority claim(s) or which is cited to establish the publication date of citation or other special reason (as specified)

"O" document referring to an oral disclosure, use, exhibition or other means

"P" document published prior to the international filing date but later than the priority date claimed

"T" later document published after the international filing date or priority date and not in conflict with the application but cited to understand the principle or theory underlying the invention

"X" document of particular relevance; the claimed invention cannot be considered novel or cannot be considered to involve an inventive step when the document is taken alone

"Y" document of particular relevance; the claimed invention cannot be considered to involve an inventive step when the document is combined with one or more other such documents,such combination being obvious to a person skilled in the art

"&" document member of the same patent family

Date of the actual completion of the international search	Date of mailing of the international search report
27 JULY 2010 (27.07.2010)	**28 JULY 2010 (28.07.2010)**

Name and mailing address of the ISA/KR

Korean Intellectual Property Office
Government Complex-Daejeon, 139 Seonsa-ro, Seo-gu, Daejeon 302-701, Republic of Korea

Facsimile No. 82-42-472-7140

Authorized officer

Jang, Ki Wan

Telephone No. 82-42-481-5567

INTERNATIONAL SEARCH REPORT

International application No.
PCT/US2009/063429

C (Continuation). DOCUMENTS CONSIDERED TO BE RELEVANT

Category*	Citation of document, with indication, where appropriate, of the relevant passages	Relevant to claim No.
A	US 2005-0182656 A1 (MOREY) 18 August 2005 See the abstract; figures 1-12; claims 1-14	1-28
A	US 2005-0216307 A1 (CLEMENTS et al.) 29 September 2005 See the abstract; figures 1-5; claims 1-51	1-28
A	US 2005-0033606 A1 (MILLER) 10 February 2005 See the abstract; figure 9; claims 1-23	1-28
A	US 2002-0032581 A1 (REITBERG) 14 March 2002 See the abstract; figure 1; claims 1-17	1-28

INTERNATIONAL SEARCH REPORT

Information on patent family members

International application No.
PCT/US2009/063429

Patent document cited in search report	Publication date	Patent family member(s)	Publication date
US 07304913 B2	04.12.2007	AU 2003-263038 A1	29.03.2004
		AU 2001-73336 A1	21.01.2002
		AU 2001-273336 B2	18.10.2007
		CA 2415891 A1	17.01.2002
		CA 2415891 C	17.11.2009
		CA 2497766 A1	18.03.2004
		CN 100433026 C	12.11.2008
		CN 1688946 A	26.10.2005
		CN 100433026 C0	12.11.2008
		CN 1688946 C0	12.11.2008
		CN 100433026 C	12.11.2008
		EP 1546819 A4	28.11.2007
		EP 1307788 A1	07.05.2003
		EP 1546819 A2	29.06.2005
		JP 2004-503271 A	05.02.2004
		JP 2005-539300 T	22.12.2005
		JP 2005-539300 A	22.12.2005
		US 2008-0104669 A1	01.05.2008
		US 2008-0103827 A1	01.05.2008
		US 2008-0099367 A1	01.05.2008
		US 2008-0099366 A1	01.05.2008
		US 2008-0080319 A1	03.04.2008
		US 2005-0254348 A1	17.11.2005
		US 06411567 B1	25.06.2002
		US 06574166 B2	03.06.2003
		US 06839304 B2	04.01.2005
		US 06961285 B2	01.11.2005
		US 07035168 B2	25.04.2006
		US 07612662 B2	03.11.2009
		US 07755478 B2	13.07.2010
		US 2002-0017996 A1	14.02.2002
		US 2003-0007421 A1	09.01.2003
		US 2003-0063524 A1	03.04.2003
		US 2003-0111477 A1	19.06.2003
		WO 2004-023245 A2	18.03.2004
		WO 2004-021965 A2	18.03.2004
		WO 2002-005039 A1	17.01.2002
		WO 2004-023245 A3	13.01.2005
		WO 2004-023245 A3	18.03.2004

INTERNATIONAL SEARCH REPORT

Information on patent family members

International application No.
PCT/US2009/063429

Patent document cited in search report	Publication date	Patent family member(s)	Publication date
US 06315720 B1	13.11.2001	AU 1437201 A	06.05.2002
		AU 2005-201675 A1	12.05.2005
		AU 2005-201675 B2	13.03.2008
		AU 2001-14372 A1	06.05.2002
		AU 2001-14372 B2	24.03.2005
		BR 0016903 A	17.12.2002
		CA 2352629 A1	23.04.2002
		CN 1425167 A	18.06.2003
		CN 1425167 A0	18.06.2003
		EP 1970827 A1	17.09.2008
		EP 1330765 A1	30.07.2003
		IL 150307 D0	01.12.2002
		JP 2006-209801 A	10.08.2006
		JP 2004-512617 A	22.04.2004
		JP 2004-512617 T	22.04.2004
		JP 2009-233326 A	15.10.2009
		PA 02006176 A	05.12.2002
		NZ 541736 A	22.12.2006
		US 2006-0224052 A1	05.10.2006
		US 06561977 B2	13.05.2003
		US 06755784 B2	29.06.2004
		US 06869399 B2	22.03.2005
		US 07141018 B2	28.11.2006
		US 2002-0052543 A1	02.05.2002
		US 2003-0149345 A1	07.08.2003
		US 2004-0152959 A1	05.08.2004
		US 2005-0176768 A1	11.08.2005
		WO 2002-035440 A1	02.05.2002
US 2007-0260491 A1	08.11.2007	WO 2007-133478 A2	22.11.2007
		WO 2007-133478 A3	22.11.2007
US 2006-0206066 A1	14.09.2006	CA 2600703 A1	21.09.2006
		EP 1877024 A1	16.01.2008
		JP 2008-532644 T	21.08.2008
		JP 2008-532644 A	21.08.2008
		WO 2006-099038 A9	01.03.2007
		WO 2006-099038 A1	21.09.2006
US 2005-0182656 A1	18.08.2005	None	
US 2005-0216307 A1	29.09.2005	US 2005-0216310 A1	29.09.2005
		US 07761311 B2	20.07.2010
		WO 2006-041678 A2	20.04.2006
		WO 2005-096209 A3	13.10.2005
		WO 2005-096209 A2	13.10.2005
		WO 2006-041678 A3	20.04.2006
US 2005-033606 A1	10.02.2005	None	

INTERNATIONAL SEARCH REPORT

Information on patent family members

International application No.
PCT/US2009/063429

Patent document cited in search report	Publication date	Patent family member(s)	Publication date
US 2002-032581 A1	14.03.2002	None	

PATENT COOPERATION TREATY

From the
INTERNATIONAL SEARCHING AUTHORITY

To:
BECKER STEPHEN A.

MCDERMOTT WILL & EMERY LLP 600 13TH STREET, N.W. WASHINGTON DC 20005-3096 USA

PCT

WRITTEN OPINION OF THE INTERNATIONAL SEARCHING AUTHORITY

(PCT Rule 43bis.1)

Date of mailing *(day/month/year)*	**28 JULY 2010 (28.07.2010)**
Applicant's or agent's file reference 048559-0017	**FOR FURTHER ACTION** See paragraph 2 below

International application No.	International filing date *(day/month/year)*	Priority date *(day/month/year)*
PCT/US2009/063429	**05 NOVEMBER 2009 (05.11.2009)**	05 NOVEMBER 2008 (05.11.2008)

International Patent Classification (IPC) or both national classification and IPC

A61J 7/04(2006.01)i, A61J 7/00(2006.01)i, G06F 19/00(2006.01)i

Applicant

GOLD STEPHEN B. et al

1. This opinion contains indications relating to the following items:

- [x] Box No. I Basis of the opinion
- [ ] Box No. II Priority
- [ ] Box No. III Non-establishment of opinion with regard to novelty, inventive step and industrial applicability
- [ ] Box No. IV Lack of unity of invention
- [x] Box No. V Reasoned statement under Rule 43bis.1(a)(i) with regard to novelty, inventive step or industrial applicability; citations and explanations supporting such statement
- [ ] Box No. VI Certain documents cited
- [ ] Box No. VII Certain defects in the international application
- [ ] Box No. VIII Certain observations on the international application

2. **FURTHER ACTION**

If a demand for international preliminary examination is made, this opinion will be considered to be a written opinion of the International Preliminary Examining Authority ("IPEA") except that this does not apply where the applicant chooses an Authority other than this one to be the IPEA and the chosen IPEA has notified the International Bureau under Rule 66.1bis(b) that written opinions of this International Searching Authority will not be so considered.

If this opinion is, as provided above, considered to be a written opinion of the IPEA, the applicant is invited to submit to the IPEA a written reply together, where appropriate, with amendments, before the expiration of 3 months from the date of mailing of Form PCT/ISA/220 or before the expiration of 22 months from the priority date, whichever expires later.
For further options, see Form PCT/ISA/220.

3. For further details, see notes to Form PCT/ISA/220.

Name and mailing address of the ISA/KR	Date of completion of this opinion	Authorized officer
Korean Intellectual Property Office Government Complex-Daejeon, 139 Seonsa-ro, Seo-gu, Daejeon 302-701, Republic of Korea Facsimile No. 82-42-472-7140	27 JULY 2010 (27.07.2010)	Jang, Ki Wan Telephone No.82-42-481-5567

WRITTEN OPINION OF THE
INTERNATIONAL SEARCHING AUTHORITY

International application No.
PCT/US2009/063429

Box No. I Basis of this opinion

1. With regard to the **language**, this opinion has been established on the basis of:

   ☒ the international application in the language in which it was filed

   ☐ a translation of the international application into _____, which is the language of a translation furnished for the purposes of international search (Rules 12.3(a) and 23.1(b))

2. ☐ This opinion has been established taking into account the **rectification of an obvious mistake** authorized by or notified to this Authority under Rule 91 (Rule 43*bis*.1(a))

3. With regard to any **nucleotide and/or amino acid sequence** disclosed in the international application, this opinion has been established on the basis of:

   a. a sequence listing filed or furnished
      ☐ on paper
      ☐ in electronic form

   b. time of filing or furnishing
      ☐ contained in the international application as filed.
      ☐ filed together with the international application in electronic form.
      ☐ furnished subsequently to this Authority for the purposes of search.

4. ☐ In addition, in the case that more than one version or copy of a sequence listing has been filed or furnished, the required statements that the information in the subsequent or additioanl copies is identical to that in the application as filed or does not go beyond the application as filed, as appropriate, were furnished.

5. Additional comments:

WRITTEN OPINION OF THE INTERNATIONAL SEARCHING AUTHORITY

International application No.
PCT/US2009/063429

Box No. V Reasoned statement under Rule 43bis.1(a)(i) with regard to novelty, inventive step or industrial applicability; citations and explanations supporting such statement

1. Statement

Novelty (N)	Claims	1-28	YES
	Claims	None	NO
Inventive step (IS)	Claims	1-28	YES
	Claims	None	NO
Industrial applicability (IA)	Claims	1-28	YES
	Claims	None	NO

2. Citations and explanations :

Reference is made to the following documents:

D1 : US 07304913 B2
D2 : US 06315720 B1
D3 : US 2007-0260491 A1
D4 : US 2006-0206066 A1
D5 : US 2005-0182656 A1
D6 : US 2005-0216307 A1
D7 : US 2005-0033606 A1
D8 : US 2002-0032581 A1

1. Novelty and Inventive Step

Subject matter of claim 1 differs from these prior art documents in that a machine implemented method comprises the steps of: (b) entering patient data and drug information into a database comprising a national patient registry, and dispensing the drug and a drug test kit to the patient, (c) submitting test kit data from the patient test kit to a centralized data collection center, (d) analyzing the patient test kit data, sending an analysis report to the patient's physician, and storing electronically the outcome the analysis report into the national patient registry database, and (g) restricting dispensation of the second prescription or modified prescription based on the analysis report.

Subject matter of claim 16 differs from these prior art documents in that a machine-implemented method comprises the step of (a) using a computer for analyzing data submitted by the patient to a national patient registry database after the patient takes the prescription drug and preparing an analysis report indicating the effectiveness of the drug in the patient.

Subject matter of claim 27 differs from these prior art documents in that a pharmacy dispensation control system comprises : a national patient registry stored on a computer readable medium comprising patient identifying information, a national drug code number for each drug prescribed to a patient, and data submitted by the patient after using the prescription drug; and a computer programmed to generate an analysis report based in part on the national drug code and data submitted by a patient after using the prescribed drug.

(Continued on Supplemental Box)

Supplemental Box

In case the space in any of the preceding boxes is not sufficient.
Continuation of:

Box V.

Subject matter of claim 28 differs from these prior art documents in that a machine implemented method comprises the steps of : entering the patient data and a drug information into database comprising a national patient registry, and dispensing the drug to the patient, and restricting dispensation of a refill prescription to patients in the national patient registry.

Claims 2-15 and 17-26 are dependent on claims 1 and 16, respectively.

Therefore, claims 1-28 meet the requirements of PCT Article 33(2) and (3) with respect to novelty and inventive step.

2. Industrial Applicability

Claims 1-28 are industrially applicable under PCT Article 33(4).

UNITED STATES PATENT AND TRADEMARK OFFICE

OCT 18 2010

Commissioner for Patents
United States Patent and Trademark Office
P.O. Box 1450
Alexandria, VA 22313-1450
www.uspto.gov

MCDERMOTT WILL & EMERY LLP
600 13TH STREET, N.W.
WASHINGTON DC 20005-3096

In re application of:	:	**DECISION ON REQUEST TO**
Gold, Steven B., et al.	:	**PARTICIPATE IN PATENT**
Application No.: 12/613,262	:	**PROSECUTION HIGHWAY**
Filed: November 5, 2009	:	**PROGRAM AND PETITION**
For: METHOD AND SYSTEM TO CONTROL AND ENHANCE PRESCRIBING AND DISPENSING OF MEDICATION	:	**TO MAKE SPECIAL UNDER 37 C.F.R. 1.102(d)**

This is a decision on the request to participate in the pilot Patent Prosecution Highway (PPH) program between the USPTO and the KIPO based on PCT treaty work products and the petition under 37 C.F.R. § 1.102(d), filed September 22, 2010 to make the above-identified application special.

The request and petition are **GRANTED**.

A grantable request to participate in this PPH pilot program and petition to make special require (see 1355 OG 319):

> (1) The relationship between the corresponding U.S. application for which participation in the PCT-PPH pilot program is requested and the PCT application satisfies one of the following requirements:
>
> (a) The U.S. application is a national stage entry of the corresponding PCT application.
>
> (b) The U.S. application is a national application which forms the basis for the priority claim in the corresponding PCT application.
>
> (c) The U.S. application is a national stage entry of another PCT application (which can be filed in any competent receiving office) which claims priority to the corresponding PCT application.
>
> (d) The U.S. application is a national application claiming foreign/domestic priority to the corresponding PCT application.
>
> (e) The U.S. application is a continuing application (continuation, divisional, or continuation-in-part) of the U.S. application which satisfies one of the above (a) through (d) scenarios.

2) The latest work product in the international phase of the PCT application corresponding to the U.S. application, namely, the WO/ISA, or the WO/IPEA, or the IPER, indicates at least one claim in the PCT application has novelty, inventive step and industrial applicability. In case any observation is described in Box VIII of the WO/ISA, WO/IPEA, or IPER which forms the basis for the PCT-PPH request, applicant must identify and explain why the claim(s) is/are not subject to any observation described in Box VIII irrespective of whether an amendment is submitted to correct the observation described in Box VIII. The U.S. application will not be eligible to participate in the PCT-PPH pilot program if applicant does not identify and explain why the claim(s) is/are not subject to the observation described in Box VIII.

(3) Claim Correspondence:

(a) All of the claims in each U.S. application for which a request for participation in the PCT-PPH pilot program is made must sufficiently correspond to or be amended to sufficiently correspond to one or more of those claims indicated as having novelty, inventive step and industrial applicability and be free of any observation described in Box VIII in the latest work product of the corresponding PCT application.

(b) Claims are considered to "sufficiently correspond" where, accounting for differences due to translations and claim format requirements, the claims in the U.S. application are of the same or similar scope as the claims indicated as having novelty, inventive step and industrial applicability and free of any observation described in Box VIII in the latest work product of the corresponding PCT application, or the claims in the U.S. application are narrower in scope than the claims indicated as having novelty, inventive step and industrial applicability and free of any observation described in Box VIII in the latest work product of the corresponding PCT application.

(c) In this regard, a claim that is narrower in scope occurs when a claim indicated as having novelty, inventive step and industrial applicability and free of any observation described in Box VIII in the latest work product of the corresponding PCT application is amended to be further limited by an additional feature that is supported in the written description of the U.S. application. The claim(s) with the narrower scope must be written in dependent form in the U.S. application for which participation in the PCT-PPH pilot program is requested.

(4) Substantive examination of the U.S. application for which participation in the PCT-PPH pilot program is requested has not begun.

(5) Applicant must file a request for participation in the PCT-PPH pilot program and a request that the U.S. application be advanced out of turn for examination by order of the Director to expedite the business of the Office under 37 CFR 1.102(a).

(6) Unless already filed in the U.S. application for which participation in the PCT-PPH pilot program is requested, applicant must submit a copy of the latest international work product, WO/ISA, or WO/IPEA or IPER, which indicated that the claim(s) has/have novelty, inventive step and industrial applicability along with an English translation thereof if the copy of the latest international work product is not in the English language. A statement that the English translation is accurate is not required. Where the required documents have been previously filed in the U.S. application, applicant may simply refer to these documents and indicate in the request for participation in the PCT-PPH pilot program when these documents were previously filed in the U.S. application. Where the U.S. application and the corresponding PCT application satisfy the relationship noted in (1)(a) above, applicant need not submit a copy of the latest international work product along with an English translation thereof since a copy of these documents is already contained in the file wrapper of the U.S. application.

(7) Unless already filed in the U.S. application for which participation in the PCT-PPH pilot program is requested, applicant must submit a copy of the claims from the corresponding PCT application which were indicated as having novelty, inventive step and industrial applicability in the latest work product of the PCT application along with an English translation thereof and a statement that the English translation is accurate if the claims are not in the English language. Where the required documents have been previously filed in the U.S. application, applicant may simply refer to these documents and indicate in the request for participation in the PCT-PPH pilot program when these documents were previously filed in the U.S. application. If the claims in the U.S. application for which participation in the PCT-PPH pilot program is requested are identical to the claims from the corresponding PCT application, and are in the English language, applicant may just indicate such in the PCT-PPH request and it will not be necessary for applicant to submit a copy of the claims from the corresponding PCT application.

(8) Applicant is required to submit a claims correspondence table in English. The claims correspondence table must indicate how all the claims in the U.S. application sufficiently correspond to the claims indicated as having novelty, inventive step and industrial applicability in the latest international work product.

(9) Applicant must submit an information disclosure statement (IDS) listing the documents cited in the international work products (ISR, WO/ISA, WO/IPEA, IPER) of the PCT application corresponding to the U.S. application for which participation in the PCT-PPH pilot program is requested (unless such an IDS has already been filed in the U.S. application, in which case applicant may simply refer to the previously filed

IDS and indicate in the request for participation in the PCT-PPH pilot program when the IDS was previously filed in the U.S. application). Applicant must submit copies of all the documents cited in the international work products of the PCT application corresponding to the U.S. application (unless the copies have already been filed in the U.S. application, in which case applicant may simply refer to the previously filed copies of the documents and indicate in the request for participation in the PCT-PPH pilot program when the copies were previously filed in the U.S. application) except U.S. patents or U.S. patent application publications.

(10) The request for participation in the PCT-PPH pilot program and all the supporting documents must be submitted to the USPTO via EFS-Web and indexed with the following document description: "Petition to make special under PCT-Patent Pros Hwy."

In light of the petition and supporting submissions filed September 22, 2010, the request to participate in the PPH program complies with the above requirements and the above identified application has been accorded "special" status.

The application is being forwarded to the examiner for action on the merits commensurate with this decision.

Any inquiry regarding this decision should be directed to Robert Weinhardt, Business Practice Specialist, at (571) 272-6633.

All other queries concerning the examination or status of the application should be directed to the Patent Application Information Retrieval (PAIR) system or the examiner of record in the application.

Robert Weinhardt
Business Practice Specialist
Technology Center 3600

RW/10/17/10

UNITED STATES PATENT AND TRADEMARK OFFICE

Commissioner for Patents
United States Patent and Trademark Office
P.O. Box 1450
Alexandria, VA 22313-1450
www.uspto.gov

Polster, Lieder, Woodruff & Lucchesi, L.C.
12412 Powerscourt Dr. Suite 200
St. Louis, MO 63131-3615

MAILED

JUN 15 2011

OFFICE OF PETITIONS

In re Application of :

Karen Pratt :
Application No. 12/613,271 : DECISION ON PETITION
Filed: November 5, 2009 : TO WITHDRAW
Attorney Docket No. PRAK D514US : FROM RECORD

This is a decision on the Request to Withdraw as attorney or agent under 37 CFR § 1.36(b) or 37 CFR § 10.40 filed May 12, 2011.

The request is **NOT APPROVED**.

It is noted that the present request is signed by J. Joseph Muller on behalf of himself and the attorneys/agents associated with Customer Number 162201. However, a review of the file record indicates that the attorneys/agents associated with Customer Number 162201 do not have power of attorney in this patent application nor is there any statement or evidence of record of employment in or otherwise being engaged in the proceedings in this patent application. Accordingly, the request to withdraw under 37 C.F.R. § 1.36(b) is not applicable.

The Office strongly encourages practitioner(s) requesting withdrawal from representation as practitioner of record in an application to review the record to determine whether he or she is, in fact, of record and how he or she was made of record. The practitioner(s) should determine whether he or she was appointed by naming each practitioner individually or through the use of a Customer Number. If the practitioner(s) were appointed by a specific designation, then the request should ask that each specified practitioner be withdrawn and should list each practitioner(s) in the Request. Similarly, if practitioner(s) was appointed by a Customer Number, the practitioner(s) should ensure that the correct number is provided in the Request.

There is an outstanding Office action mailed May 4, 2011, that requires a reply from the applicant.

All future communications from the Office will continue to be directed to the above-listed address until otherwise properly notified by the applicant.

Telephone inquiries concerning this decision should be directed to the undersigned at (571) 272-3226.

Andrea Smith
Petitions Examiner
Office of Petitions

cc: Karen Pratt
102 S. Rod Lane
Carbondale, IL 72901

UNITED STATES PATENT AND TRADEMARK OFFICE

Commissioner for Patents
United States Patent and Trademark Office
P.O. Box 1450
Alexandria, VA 22313-1450
www.uspto.gov

Polster, Lieder, Woodruff & Lucchesi, L.C.
12412 Powerscourt Dr. Suite 200
St. Louis, MO 63131-3615

MAILED

JUL 05 2011

OFFICE OF PETITIONS

In re Application of	:	
Karen Pratt	:	
Application No. 12/613,271	:	DECISION ON PETITION
Filed: November 5, 2009	:	TO WITHDRAW
Attorney Docket No. PRAK D514US	:	FROM RECORD

This is a decision on the renewed Request to Withdraw as attorney or agent under 37 CFR § 1.36(b) or 37 CFR § 10.40 filed June 23, 2011.

The request is **APPROVED**.

The request was signed by J. Joseph Muller on behalf of himself and all attorneys/agents associated with Customer Number 01688. Therefore, J. Joseph Muller and all the attorneys/agents associated with Customer Number 01688 have been withdrawn.

Applicant is reminded that there are no attorneys/agents of record at this time.

There is an outstanding Office action mailed May 4, 2011, that requires a reply from the applicant.

All future communications from the Office will be directed to the address listed below until otherwise properly notified by the applicant.

Telephone inquiries concerning this decision should be directed to the undersigned at (571) 272-3226.

Andrea Smith
Petitions Examiner
Office of Petitions

cc: Karen Pratt
102 S. Rod Lane
Carbondale, IL 72901

UNITED STATES PATENT AND TRADEMARK OFFICE

UNITED STATES DEPARTMENT OF COMMERCE
United States Patent and Trademark Office
Address: COMMISSIONER FOR PATENTS
P.O. Box 1450
Alexandria, Virginia 22313-1450
www.uspto.gov

APPLICATION NUMBER	FILING OR 371(C) DATE	FIRST NAMED APPLICANT	ATTY. DOCKET NO./TITLE
12/613,271	11/05/2009	Karen Pratt	PRAK D514US

CONFIRMATION NO. 5977

1688
Polster, Lieder, Woodruff & Lucchesi, L.C.
12412 Powerscourt Dr. Suite 200
St. Louis, MO 63131-3615

POWER OF ATTORNEY NOTICE

OC000000048552196

Date Mailed: 07/01/2011

NOTICE REGARDING CHANGE OF POWER OF ATTORNEY

This is in response to the Power of Attorney filed 06/23/2011.

- The withdrawal as attorney in this application has been accepted. Future correspondence will be mailed to the new address of record. 37 CFR 1.33.

/amsmith/

Office of Data Management, Application Assistance Unit (571) 272-4000, or (571) 272-4200, or 1-888-786-0101

Doc Code: PET.GREEN
Document Description: Petition for Green Tech Pilot

PTO/SB/420 (05-10)
Approved for use through 01/31/2011. OMB 0651-0062
U.S. Patent and Trademark Office; U. S. DEPARTMENT OF COMMERCE
Under the Paperwork Reduction Act of 1995, no persons are required to respond to a collection of information unless it displays a valid OMB control number.

PETITION TO MAKE SPECIAL UNDER THE GREEN TECHNOLOGY PILOT PROGRAM

Attorney Docket Number: O2-0599	Application Number (if known): 12/613,333	Filing date: 11-05-2009

First Named Inventor: William DENSHAM

Title: CHARGING SYSTEMS WITH CELL BALANCING FUNCTIONS

APPLICANT HEREBY REQUESTS TO PARTICIPATE IN THE GREEN TECHNOLOGY PILOT PROGRAM FOR THE ABOVE-IDENTIFIED APPLICATION. **See Instruction Sheet on page 2.**

This petition must be timely filed electronically using the USPTO electronic filing system, EFS-Web.

1. By filing this petition:

   Applicant is requesting early publication: Applicant hereby requests early publication under 37 CFR 1.219 and the publication fee set forth in 37 CFR 1.18(d) accompanies this request.

2. By filing this petition: applicant is agreeing to make an election without traverse in a telephonic interview and elect an invention that meets the eligibility requirements set forth in the notice titled "Pilot Program for Green Technologies Including Greenhouse Gas Reduction," as modified by the notice titled "Elimination of Classification Requirement in the Green Technology Pilot Program," each of which was published in the Federal Register, if the Office determines that the claims are not obviously directed to a single invention.

3. This request is accompanied by statements of special status for the eligibility requirement.

4. The application contains no more than three (3) independent claims and twenty (20) total claims.

5. The application does not contain any multiple dependent claims.

6. Other attachments: _____

Signature /James P. Hao/	Date 11-29-2010
Name (Print/Typed) James P. Hao	Registration Number 36398

Note: *Signatures of all the inventors or assignees of record of the entire interest or their representative(s) are required in accordance with 37 CFR 1.33 and 11.18. Please see 37 CFR 1.4(d) for the form of the signature. If necessary, submit multiple forms for more than one signature, see below*.*

☐ *Total of _____ forms are submitted.

The information is required to obtain or retain a benefit by the public which is to file (and by the USPTO to process) an application. Confidentiality is governed by 35 U.S.C. 122 and 37 CFR 1.11 and 1.14. This collection is estimated to take 1 hour to complete, including gathering, preparing, and submitting the completed application form to the USPTO. Time will vary depending upon the individual case. Any comments on the amount of time you require to complete this form and/or suggestions for reducing this burden, should be sent to the Chief Information Officer, U.S. Patent and Trademark Office, U.S. Department of Commerce, P.O. Box 1450, Alexandria, VA 22313-1450. DO NOT SEND FEES OR COMPLETED FORMS TO THIS ADDRESS. **SEND TO: Commissioner for Patents, P.O. Box 1450, Alexandria, VA 22313-1450.**

If you need assistance in completing the form, call 1-800-PTO-9199 and select option 2.

PTO/SB/420 (05-10)
Approved for use through 01/31/2011. OMB 0651-0062
U.S. Patent and Trademark Office; U. S. DEPARTMENT OF COMMERCE
Under the Paperwork Reduction Act of 1995, no persons are required to respond to a collection of information unless it displays a valid OMB control number.

Instruction Sheet for Petition to Make Special Under the Green Technology Pilot Program

(Not to be Submitted to the USPTO)

***The following is a summary of the requirements** (for more information see the notices (i) "Pilot Program for Green Technologies Including Greenhouse Gas Reduction" and (ii) "Elimination of Classification Requirement in the Green Technology Pilot Program," available on the USPTO web site at http://www.uspto.gov/patents/init_events/green_tech.jsp):*

(1) The application must be a non-reissue, non-provisional utility application filed under 35 U.S.C. 111(a), or an international application that has entered the national stage in compliance with 35 U.S.C. 371. The application must be previously filed before the publication date of the notice cited above. Reexamination proceedings are excluded from this pilot program.

(2) The application must contain three or fewer independent claims and twenty or fewer total claims. The application must not contain any multiple dependent claims. For an application that contains more than three independent claims or twenty total claims, or multiple dependent claims, applicant must file a preliminary amendment in compliance with 37 CFR 1.121 to cancel the excess claims and/or the multiple dependent claims at the time the petition to make special is filed.

(3) The claims must be directed to a single invention that materially enhances the quality of the environment, or that materially contributes to: (1) the discovery or development of renewable energy resources; (2) the more efficient utilization and conservation of energy resources; or (3) green house gas emission reduction (see the eligibility requirements of sections II and III of the notice (i) cited above). The petition must include a statement that, if the USPTO determines that the claims are directed to multiple inventions (e.g., in a restriction requirement), applicant will agree to make an election without traverse in a telephonic interview, and elect an invention that meets the eligibility requirements in section II or III of the notice (i) cited above.

(4) The petition to make special must be timely filed electronically using the USPTO electronic filing system, EFS-Web, and selecting the document description of "Petition for Green Tech Pilot" on the EFS-Web screen. Applicant should use form PTO/SB/420, which is available as a Portable Document Format (PDF) fillable form in EFS-Web and on the USPTO Web site.

(5) The petition to make special must be filed at least one day prior to the date that a first Office action (which may be an Office action containing only a restriction requirement) appears in the Patent Application Information Retrieval (PAIR) system. Applicant may check the status of the application using PAIR.

(6) The petition to make special must be accompanied by a request for early publication in compliance with 37 CFR 1.219 and the publication fee set forth in 37 CFR 1.18(d).

Privacy Act Statement

The **Privacy Act of 1974 (P.L. 93-579)** requires that you be given certain information in connection with your submission of the attached form related to a patent application or patent. Accordingly, pursuant to the requirements of the Act, please be advised that: (1) the general authority for the collection of this information is 35 U.S.C. 2(b)(2); (2) furnishing of the information solicited is voluntary; and (3) the principal purpose for which the information is used by the U.S. Patent and Trademark Office is to process and/or examine your submission related to a patent application or patent. If you do not furnish the requested information, the U.S. Patent and Trademark Office may not be able to process and/or examine your submission, which may result in termination of proceedings or abandonment of the application or expiration of the patent.

The information provided by you in this form will be subject to the following routine uses:

1. The information on this form will be treated confidentially to the extent allowed under the Freedom of Information Act (5 U.S.C. 552) and the Privacy Act (5 U.S.C 552a). Records from this system of records may be disclosed to the Department of Justice to determine whether disclosure of these records is required by the Freedom of Information Act.
2. A record from this system of records may be disclosed, as a routine use, in the course of presenting evidence to a court, magistrate, or administrative tribunal, including disclosures to opposing counsel in the course of settlement negotiations.
3. A record in this system of records may be disclosed, as a routine use, to a Member of Congress submitting a request involving an individual, to whom the record pertains, when the individual has requested assistance from the Member with respect to the subject matter of the record.
4. A record in this system of records may be disclosed, as a routine use, to a contractor of the Agency having need for the information in order to perform a contract. Recipients of information shall be required to comply with the requirements of the Privacy Act of 1974, as amended, pursuant to 5 U.S.C. 552a(m).
5. A record related to an International Application filed under the Patent Cooperation Treaty in this system of records may be disclosed, as a routine use, to the International Bureau of the World Intellectual Property Organization, pursuant to the Patent Cooperation Treaty.
6. A record in this system of records may be disclosed, as a routine use, to another federal agency for purposes of National Security review (35 U.S.C. 181) and for review pursuant to the Atomic Energy Act (42 U.S.C. 218(c)).
7. A record from this system of records may be disclosed, as a routine use, to the Administrator, General Services, or his/her designee, during an inspection of records conducted by GSA as part of that agency's responsibility to recommend improvements in records management practices and programs, under authority of 44 U.S.C. 2904 and 2906. Such disclosure shall be made in accordance with the GSA regulations governing inspection of records for this purpose, and any other relevant (*i.e.*, GSA or Commerce) directive. Such disclosure shall not be used to make determinations about individuals.
8. A record from this system of records may be disclosed, as a routine use, to the public after either publication of the application pursuant to 35 U.S.C. 122(b) or issuance of a patent pursuant to 35 U.S.C. 151. Further, a record may be disclosed, subject to the limitations of 37 CFR 1.14, as a routine use, to the public if the record was filed in an application which became abandoned or in which the proceedings were terminated and which application is referenced by either a published application, an application open to public inspection or an issued patent.
9. A record from this system of records may be disclosed, as a routine use, to a Federal, State, or local law enforcement agency, if the USPTO becomes aware of a violation or potential violation of law or regulation.

UNITED STATES PATENT AND TRADEMARK OFFICE

UNITED STATES DEPARTMENT OF COMMERCE
United States Patent and Trademark Office
Address: COMMISSIONER FOR PATENTS
P.O. Box 1450
Alexandria, Virginia 22313-1450
www.uspto.gov

APPLICATION NO.	FILING DATE	FIRST NAMED INVENTOR	ATTORNEY DOCKET NO.	CONFIRMATION NO.
12/613,333	11/05/2009	William DENSHAM	O2-0599	6083

74878 7590 12/22/2010

O2MICRO INC
C/O MURABITO, HAO & BARNES LLP
TWO NORTH MARKET STREET
THIRD FLOOR
SAN JOSE, CA 95113

EXAMINER	
ASSOUAD, PATRICK J	
ART UNIT	**PAPER NUMBER**
2858	

MAIL DATE	DELIVERY MODE
12/22/2010	PAPER

Please find below and/or attached an Office communication concerning this application or proceeding.

The time period for reply, if any, is set in the attached communication.

UNITED STATES PATENT AND TRADEMARK OFFICE

Commissioner for Patents
United States Patent and Trademark Office
P.O. Box 1450
Alexandria, VA 22313-1450
www.uspto.gov

O2MICRO INC
C/O MURABITO, HAO & BARNES LLP
TWO NORTH MARKET STREET
THIRD FLOOR
SAN JOSE CA 95113

In re Application of	:	
DENSHAM et al.	:	DECISION ON PETITION
Application No. 12/613,333	:	TO MAKE SPECIAL UNDER
Filed: November 05, 2009	:	THE GREEN TECHNOLOGY
Attorney Docket No. O2-0599	:	PILOT PROGRAM

This is a decision on the petition under 37 CFR 1.102, filed on November 29, 2010, to make the above-identified application special under the pilot program for applications pertaining to Green Technologies as set forth 74 Federal Register Notice 64666 (December 8, 2009) and amended by 75 Federal Register Notice 28554 (May 21, 2010) and 75 Federal Register Notice 69049 (November 10, 2010).

The petition is **DISMISSED**.

If reconsideration of this decision is desired, a petition for reconsideration must be filed within ONE (1) MONTH OR THIRTY (30) DAYS from the mail date of this decision, whichever is longer. No extension of this time limit can be granted under 37 CFR 1.136(a) or (b). The petition for reconsideration should include an exhaustive attempt to provide the lacking item(s) noted below, since, after a decision on the petition for reconsideration, no further reconsideration or review of the matter will be undertaken by the Director.

A grantable petition to make an application special under 37 CFR 1.102 and the pilot program as set forth in 74 FR 64666 must be directed to a nonprovisional application filed under 35 USC 111(a) or be a national stage entry under 35 USC 371, exclusive of any reissue applications and be filed prior to the date of the notice, December 8, 2009.

In order to qualify for special status, the following requirements must be met. 1) The application must have no more than 3 independent claims and no more than 20 total claims. 2) The application must not contain any multiple dependent claims. 3) The petition must state the basis for seeking special status, i.e., the claimed invention either: A) materially enhances the quality of the environment or B) materially contributes to: i) the discovery or development of renewable energy resources, ii) the more efficient utilization and conservation of energy resources, or iii) greenhouse gas emission reduction. 4) If the disclosure is not clear on its face that the claimed invention materially contributes under category (A) or (B), the petition must be accompanied by

a statement by the applicant, assignee, or an attorney/agent registered to practice before the Office explaining how the materiality standard is met. 5) A statement that applicant will agree to make an election without traverse in a telephonic interview if a restriction requirement is made by the examiner. 6) The petition to make special must be filed electronically. 7) The petition must be filed at least one day prior to the date that a first Office Action appears in the Patent Application Information Retrieval (PAIR) system. 8) The petition must be accompanied by a request for early publication in compliance with 37 CFR 1.219 and include the publication fee as set forth in 37 CFR 1.18(d).

The requirement for a fee for consideration of the petition to make special for applications pertaining to Green Technologies has been waived.

The petition lacks item 4.

In regard to item 4, applicant's statement pertaining to how the materiality standard is met does not satisfy the requirements for this pilot. The instant petition includes a statement identifying the basis for the special status as contributing to more efficient utilization and conservation of energy. The claims are directed to a power converter, a method for charging battery cells, and a charging system. The materiality standard does not permit an applicant to speculate as to how a hypothetical end-user might specially apply the invention in a manner that could contribute to the development of more efficient utilization and conservation of energy. Any argument that the claimed invention involves energy conservation is considered speculate as to how a hypothetical end-user might specially apply the claimed invention.

Any reconsideration of this decision should be submitted through the USPTO electronic filing system, EFS-Web, and selecting the document description of "Petition for Green Tech Pilot" on the EFS-Web screen.

Telephone inquiries concerning this decision should be directed to Lee W. Young at 571-272-4549.

The application is being forwarded to the Technology Center Art Unit 2858 for action in its regular turn.

Lee W. Young
Quality Assurance Specialist
Technology Center 2800

O2-0599
12/613,333

IN THE UNITED STATES PATENT AND TRADEMARK OFFICE

Applicant:	DENSHAM, William et al.	Examiner: ASSOUAD, P.	
Serial No.:	12/613,333	Group Art Unit: 2858	
Filed:	11-05-2009		
Confirmation No.:	6083		
Title:	CHARGING SYSTEMS WITH CELL BALANCING FUNCTIONS		

Mail Stop Petition
Commissioner for Patents
P.O Box 1450
Alexandria, VA 22313-1450

PETITION FOR RECONSIDERATION OF DISMISSAL OF PETITION TO MAKE SPECIAL UNDER THE GREEN TECHNOLOGY PILOT PROGRAM

1. Applicant hereby petitions to reconsider the dismissal of the Petition to Make Special Under the Green Technology Pilot Program ("the Petition").

2. According to the Decision on Petition to Make Special Under the Green Technology Pilot Program, the Petition was dismissed because it was contended Applicant's statement pertaining to how the materiality standard is met did not satisfy the requirements for the Green Technology Pilot Program. Applicant disagrees with this contention.

3. Applicant hereby submits a Supplemental Statement of Special Status and a Preliminary Amendment in support of this Petition for Reconsideration.

The Commissioner is hereby authorized to charge fees associated with this communication or credit any overpayment to Deposit Account No.: 50-4160.

Please direct all correspondence concerning the above-identified application to the following address:

MURABITO HAO & BARNES LLP
Two North Market Street, Third Floor
San Jose, California 95113
(408) 938-9060
74878

Respectfully submitted,

Date: 01/20/2011

By: /James P. Hao/
James P. Hao
Reg. No. 36,398

O2-0599
12/613,333

IN THE UNITED STATES PATENT AND TRADEMARK OFFICE

Applicant:	DENSHAM, William et al.	Examiner: ASSOUAD, P.
Serial No.:	12/613,333	Group Art Unit: 2858
Filed:	11-05-2009	
Confirmation No.:	6083	
Title:	CHARGING SYSTEMS WITH CELL BALANCING FUNCTIONS	

SUPPLEMENTAL STATEMENT OF SPECIAL STATUS FOR PETITION TO MAKE SPECIAL UNDER THE GREEN TECHNOLOGY PILOT PROGRAM

Commissioner for Patents
P.O. Box 1450
Alexandria, VA 22313-1450

Dear Sir:

BASIS FOR SPECIAL STATUS

Special status under the Green Technology Pilot program is sought because the claimed subject matter of this Application materially contributes to the more efficient utilization and conservation of energy resources. Further, the claimed subject matter of this Application materially enhances the quality of the environment through energy conservation.

HOW THE MATERIALITY STANDARD IS MET

The claimed subject matter of this Application is directed to method for reduced power consumption balancing and charging of a plurality of cells of a rechargeable multi-cell battery pack, power converter for reduced power consumption balancing and charging of a plurality of battery cells of a rechargeable multi-cell battery pack, and charging system for reduced power consumption balancing and charging of a plurality of battery cells of a rechargeable multi-cell battery pack. The method for reduced power consumption balancing and charging of a plurality of cells of a rechargeable multi-cell battery pack, power converter for reduced power consumption balancing and charging of a plurality of battery cells of a rechargeable multi-cell battery pack, and charging system for reduced power consumption balancing and charging of a plurality of battery cells of a rechargeable multi-cell battery pack materially contribute to the more efficient utilization and conservation of energy resources by implementing a balancing technique that reduces power consumption compared to existing balancing technology. Consequently, a rechargeable multi-cell battery pack employing the claimed subject matter of this Application consumes less power during balancing than existing technology, which leads to the more efficient utilization and conservation of energy resources.

Specific passages of the Specification discuss the claimed subject matter of this Application in connection with the efficient utilization and conservation of energy. According to paragraph 0028 of the Specification, "In one such embodiment, the conventional bypasses and the conventional bypass controller are omitted, which

reduces the power consumption of the charging system 200. In addition, the time needed for cell balancing can be reduced." Additionally, "By using the power converter, the charging system can charge the set of cells and at the same time balance the set of cells," according to paragraph 0062 of the Specification.

Furthermore, rechargeable multi-cell battery packs can provide electrical power without the constraint of a power cord. They are widely used in portable devices such as cell phones, personal digital assistants (PDAs), laptops, and power tools, and now even can be used in electrical vehicles. The rechargeable multi-cell battery packs may utilize nickel-cadmium (NiCd), nickel-metal hydride (NiMH), or lithium ion (LiIon).

In a rechargeable multi-cell battery pack, cells may differ from each other due to cell aging and/or different cell temperatures. A voltage difference among the cells may increase as the number of charging/discharging cycles increases, which may cause imbalance between the cells and may shorten a battery life. Traditional cell balancing methods include discharging cells having relatively high cell voltages by selecting a corresponding bypass. However, such traditional cell balancing methods may cause power losses via the bypass to be relatively high and may induce considerable thermal energy dissipation, e.g., in electric vehicle (EV) applications.

The Commissioner is hereby authorized to charge fees associated with this communication or credit any overpayment to Deposit Account No.: 50-4160.

Please direct all correspondence concerning the above-identified application to the following address:

MURABITO HAO & BARNES LLP
Two North Market Street, Third Floor
San Jose, California 95113
(408) 938-9060
74878

Respectfully submitted,

Date: 01/20/2011

By: /James P. Hao/
James P. Hao
Reg. No. 36,398

UNITED STATES PATENT AND TRADEMARK OFFICE

UNITED STATES DEPARTMENT OF COMMERCE
United States Patent and Trademark Office
Address: COMMISSIONER FOR PATENTS
P.O. Box 1450
Alexandria, Virginia 22313-1450
www.uspto.gov

APPLICATION NO.	FILING DATE	FIRST NAMED INVENTOR	ATTORNEY DOCKET NO.	CONFIRMATION NO.
12/613,333	11/05/2009	William DENSHAM	O2-0599	6083

74878 7590 03/10/2011

O2MICRO INC
C/O MURABITO, HAO & BARNES LLP
TWO NORTH MARKET STREET
THIRD FLOOR
SAN JOSE, CA 95113

EXAMINER	
FANTU, YALKEW	
ART UNIT	**PAPER NUMBER**
2858	

MAIL DATE	DELIVERY MODE
03/10/2011	PAPER

Please find below and/or attached an Office communication concerning this application or proceeding.

The time period for reply, if any, is set in the attached communication.

UNITED STATES PATENT AND TRADEMARK OFFICE

Commissioner for Patents
United States Patent and Trademark Office
P.O. Box 1450
Alexandria, VA 22313-1450
www.uspto.gov

O2MICRO INC
C/O MURABITO, HAO & BARNES LLP
TWO NORTH MARKET STREET
THIRD FLOOR
SAN JOSE CA 95113

In re Application of	:	
DENSHAM et al.	:	DECISION ON PETITION
Application No. 12/613,333	:	TO MAKE SPECIAL UNDER
Filed: November 05, 2009	:	THE GREEN TECHNOLOGY
Attorney Docket No. O2-0599	:	PILOT PROGRAM

This is a decision on the petition under 37 CFR 1.102, filed on November 29, 2010 and renewed on January 20, 2011, to make the above-identified application special under the pilot program for applications pertaining to Green Technologies as set forth 74 Federal Register Notice 64666 (December 8, 2009) and amended by 75 Federal Register Notice 28554 (May 21, 2010) and 75 Federal Register Notice 69049 (November 10, 2010).

The petition is **GRANTED**.

A grantable petition to make an application special under 37 CFR 1.102 and the pilot program as set forth in 74 FR 64666 must be directed to a nonprovisional application filed under 35 USC 111(a) or be a national stage entry under 35 USC 371, exclusive of any reissue applications.

In order to qualify for special status, the following requirements must be met. 1) The application must have no more than 3 independent claims and no more than 20 total claims. 2) The application must not contain any multiple dependent claims. 3) The petition must state the basis for seeking special status, i.e., the claimed invention either: A) materially enhances the quality of the environment or B) materially contributes to: i) the discovery or development of renewable energy resources, ii) the more efficient utilization and conservation of energy resources, or iii) greenhouse gas emission reduction. 4) If the disclosure is not clear on its face that the claimed invention materially contributes under category (A) or (B), the petition must be accompanied by a statement by the applicant, assignee, or an attorney/agent registered to practice before the Office explaining how the materiality standard is met. 5) A statement that applicant will agree to make an election without traverse in a telephonic interview if a restriction requirement is made by the examiner. 6) The petition to make special must be filed electronically. 7) The petition must be filed at least one day prior to the date that a first Office Action appears in the Patent Application Information Retrieval (PAIR) system. 8) The petition must be accompanied by a request for early publication in compliance with 37 CFR 1.219 and include the publication fee as set forth in 37 CFR 1.18(d).

The requirement for a fee for consideration of the petition to make special for applications pertaining to Green Technologies has been waived.

The instant petition complies with items 1 – 8 above. Accordingly, the above-identified application has been accorded "special" status.

Telephone inquires concerning this decision should be directed to Lee W. Young at 571-272-4549.

The application is being forwarded to the Technology Center Art Unit 2836 for action in its regular turn.

Lee W. Young
Quality Assurance Specialist
Technology Center 2800

2800

UNITED STATES PATENT AND TRADEMARK OFFICE

Commissioner for Patents
United States Patent and Trademark Office
P.O. Box 1450
Alexandria, VA 22313-1450
www.uspto.gov

O2MICRO INC
C/O MURABITO, HAO & BARNES LLP
TWO NORTH MARKET STREET
THIRD FLOOR
SAN JOSE, CA 95113

MAILED
JAN 23 2012
OFFICE OF PETITIONS

In re Application of :
William Densham, et al. :
Application No.: 12/613,333 : ON PETITION
Filed: November 5, 2009 :
Attorney Docket No.: O2-0599 :

This is a decision on the petition, filed January 19, 2012, under 37 CFR 1.313(c)(2) to withdraw the above-identified application from issue after payment of the issue fee.

The petition is **GRANTED**.

The above-identified application is withdrawn from issue for consideration of a submission under 37 CFR 1.114 (request for continued examination). See 37 CFR 1.313(c)(2).

Petitioner is advised that the issue fee paid on September 23, 2011, cannot be refunded. If, however, this application is again allowed, petitioner may request that it be applied towards the issue fee required by the new Notice of Allowance.[1]

Telephone inquiries relating to this decision should be directed to the undersigned at (571) 272-3204.

The application is being referred to Technology Center AU 2858 for further processing of the request for continued examination and for consideration of the concurrently filed Information Disclosure Statement (IDS).

/SDB/

Sherry D. Brinkley
Petitions Examiner
Office of Petitions

[1] *The request to apply the issue fee to the new Notice may be satisfied by completing and returning the new Part B – Fee(s) Transmittal Form (along with any balance due at the time of submission). Petitioner is advised that the Issue Fee Transmittal Form must be completed and timely submitted to avoid abandonment of the application.*

IN THE UNITED STATES PATENT AND TRADEMARK OFFICE

Attorney Docket No.: 02-0599

Inventor(s): DENSHAM, et al. Group Art Unit: 2858

Filed: 11/05/2009 Examiner: FANTU, Yalkew

Serial No.: 12/613,333

Confirmation No. 6083

Title: CHARGING SYSTEMS WITH CELL BALANCING FUNCTIONS

Commissioner for Patents
P.O. Box 1450
Alexandria, VA 22313-1450

Sir:

PETITION UNDER (37 C.F.R. § 1.313(C))
WITHDRAWAL FROM ISSUE- ISSUE FEE PAID

1. Applicant petitions that the above identified application be withdrawn from issue. The issue fee was paid on **09/23/2011**

2. Reason for withdrawal from issue:
The reason applicant seeks withdrawal from issue of the application is:

[X] RCE to permit consideration of a request for continued examination (RCE) in compliance with § 1.114.

[X] An Information Disclosure Statement (IDS) accompanies the RCE.

[ ] The IDS is of a size which makes it impractical to file with the RCE and the IDS will be filed later in the RCE.

3. Petition Fee (37 C.F.R. § 1.17(i)):

The full fee due in connection with this communication is provided as follows:

[x] The Commissioner is hereby authorized to charge $130.00 or any additional fees associated with this communication or credit any overpayment to Deposit Account No.: 50-4160.

[ ] A check in the amount of _____

01/24/2012 CKHLOK 00000001 504160 12613333
Sale Ref: 00000001 DAN: 504160 12613333
01 FC:1464 130.00 DA

Please direct all correspondence concerning the above-identified application to the following address:

MURABITO, HAO & BARNES LLP
Two North Market Street
Third Floor
San Jose, CA 95113
(408) 938-9060
Customer No.: 74878

Respectfully submitted,

Date: January 19, 2012

By: /James P. Hao/
James P. Hao
Reg. No.: 36,398

UNITED STATES PATENT AND TRADEMARK OFFICE

UNITED STATES DEPARTMENT OF COMMERCE
United States Patent and Trademark Office
Address: COMMISSIONER FOR PATENTS
P.O. Box 1450
Alexandria, Virginia 22313-1450
www.uspto.gov

APPLICATION NO.	FILING DATE	FIRST NAMED INVENTOR	ATTORNEY DOCKET NO.	CONFIRMATION NO.
12/613,392	11/05/2009	Byoung Ohan Shim	5038-092605	6184

28289 7590 12/16/2010

THE WEBB LAW FIRM, P.C.
700 KOPPERS BUILDING
436 SEVENTH AVENUE
PITTSBURGH, PA 15219

EXAMINER	
ART UNIT	PAPER NUMBER
3744	

MAIL DATE	DELIVERY MODE
12/16/2010	PAPER

Please find below and/or attached an Office communication concerning this application or proceeding.

The time period for reply, if any, is set in the attached communication.

UNITED STATES PATENT AND TRADEMARK OFFICE

Commissioner for Patents
United States Patent and Trademark Office
P.O. Box 1450
Alexandria, VA 22313-1450
www.uspto.gov

THE WEBB LAW FIRM, P.C.
700 KOPPERS BUILDING
436 SEVENTH AVENUE
PITTSBURGH PA 15219

In re Application of:
SHIM, BYOUNG OHAN et al
Application No.: 12/613,392
Filed: Nov. 5, 2009
Docket: 5038-092605
Title: GROUND WATER RESTORATION TYPE TERRESTRIAL HEAT EXCHANGER USING AUTO TEMPERATURE BYPASS APPARATUS

:: DECISION ON REQUEST TO PARTICIPATE IN PATENT PROSECUTION HIGHWAY PILOT PROGRAM AND PETITION TO MAKE SPECIAL UNDER 37 CFR 1.102(a)

This is a decision on the request to participate in the Patent Prosecution Highway (PPH) pilot program and the petition under 37 CFR 1.102(a), filed Dec. 15, 2010 to make the above-identified application special. The required petition fee under 37 CFR 1.17(h) was charged to the deposit account as authorized.

The request and petition are **dismissed**

A grantable request to participate in the PPH pilot program and petition to make special require:

(1) The U.S. application must validly claim priority under 35 U.S.C. 119(a) to one or more applications filed in the KIPO;
(2) Applicant must submit a copy of the allowable/patentable claim(s) from the KIPO application(s) along with an English translation thereof and a statement that the English translation is accurate;
(3) All the claims in the U.S. application must sufficiently correspond or be amended to sufficiently correspond to the allowable/patentable claim(s) in the KIPO application(s);
(4) Examination of the U.S. application has not begun;
(5) Applicant must submit a copy of all the office actions from each of the KIPO application(s) containing the allowable/patentable claim(s) along with an English translation thereof and a statement that the English translation is accurate; and
(6) Applicant must submit an IDS listing the documents cited by the KIPO examiner in the KIPO office action along with copies of documents except U.S. patents or U.S. patent application publications.

The request to participate in the PPH pilot program and petition do not comply with the above requirements. The request to participate in the PPH program and petition fails to include Item #6.

With regard to Item #6, a copy of cited prior art references from the KIPO is required. In particular, a copy of cited JP2004225936 A; JP2007085644 A and JP2008069576 A is required. An IDS list is also required.

Applicant is given a time period of **ONE MONTH or THIRTY DAYS**, whichever is longer, from the mailing date of this decision to correct the deficiencies. **NO EXTENSION OF TIME UNDER 37 CFR 1.136 IS PERMITTED.** If the deficiencies are not corrected with the time period given, the application will await action in its regular turn. The application will be forwarded to the examiner for action in its regular turn.

Telephone inquiries concerning this decision should be directed to Henry C. Yuen at 571-272-4856.

Petition is **dismissed**.

/Henry C. Yuen/

_____

Henry C. Yuen, Special Programs Examiner
Technology Center 3700 – Mechanical Engineering,
Manufacturing and Products
571-272-4856

UNITED STATES PATENT AND TRADEMARK OFFICE

UNITED STATES DEPARTMENT OF COMMERCE
United States Patent and Trademark Office
Address: COMMISSIONER FOR PATENTS
P.O. Box 1450
Alexandria, Virginia 22313-1450
www.uspto.gov

APPLICATION NO.	FILING DATE	FIRST NAMED INVENTOR	ATTORNEY DOCKET NO.	CONFIRMATION NO.
12/613,392	11/05/2009	Byoung Ohan Shim	5038-092605	6184

28289 7590 01/13/2011

THE WEBB LAW FIRM, P.C.
700 KOPPERS BUILDING
436 SEVENTH AVENUE
PITTSBURGH, PA 15219

EXAMINER	
ART UNIT	PAPER NUMBER
3744	

MAIL DATE	DELIVERY MODE
01/13/2011	PAPER

Please find below and/or attached an Office communication concerning this application or proceeding.

The time period for reply, if any, is set in the attached communication.

UNITED STATES PATENT AND TRADEMARK OFFICE

Commissioner for Patents
United States Patent and Trademark Office
P.O. Box 1450
Alexandria, VA 22313-1450
www.uspto.gov

THE WEBB LAW FIRM, P.C.
700 KOPPERS BUILDING
436 SEVENTH AVENUE
PITTSBURGH PA 15219

In re Application of:
SHIM, BYOUNG OHAN et al
Application No.: 12/613,392
Filed: Nov. 5, 2009
Docket: 5038-092605
Title: GROUND WATER RESTORATION TYPE TERRESTRIAL HEAT EXCHANGER USING AUTO TEMPERATURE BYPASS APPARATUS

:: DECISION ON REQUEST TO PARTICIPATE IN PATENT PROSECUTION HIGHWAY PILOT PROGRAM AND PETITION TO MAKE SPECIAL UNDER 37 CFR 1.102(a)

This is a decision on the renewed request to participate in the Patent Prosecution Highway (PPH) pilot program and the petition under 37 CFR 1.102(a), filed Jan. 10, 2011 to make the above-identified application special. The required petition fee under 37 CFR 1.17(h) was charged to the deposit account as authorized.

The request and petition are **granted.**

A grantable request to participate in the PPH pilot program and petition to make special require:

(1) The U.S. application must validly claim priority under 35 U.S.C. 119(a) to one or more applications filed in the KIPO;
(2) Applicant must submit a copy of the allowable/patentable claim(s) from the KIPO application(s) along with an English translation thereof and a statement that the English translation is accurate;
(3) All the claims in the U.S. application must sufficiently correspond or be amended to sufficiently correspond to the allowable/patentable claim(s) in the KIPO application(s);
(4) Examination of the U.S. application has not begun;
(5) Applicant must submit a copy of all the office actions from each of the KIPO application(s) containing the allowable/patentable claim(s) along with an English translation thereof and a statement that the English translation is accurate; and
(6) Applicant must submit an IDS listing the documents cited by the KIPO examiner in the KIPO office action along with copies of documents except U.S. patents or U.S. patent application publications.

In light of the petition being properly submitted, the request to participate in the PPH program and the petition comply with the above requirements. Accordingly, the above-identified application has been accorded "special" status.

The applicant is encouraged to cite and submit all relevant prior art references, if any, to facilitate examination in this application.

Other inquiries concerning the examination or status of the application should be directed to Cheryl Tyler, the SPE of Art Unit 3744 and 571-272-4834 for Class 165/45 and also accessible in the PAIR system at http://www.uspto.gov/ebc.index.html.

All other inquiries concerning the examination or status of the application should be directed to the Patent Application Information Retrieval (PAIR) system.

This application will be forwarded and docketed to an examiner for action on the merits commensurate with this decision.

Telephone inquiries concerning this decision should be directed to Henry C. Yuen, at 571-272-4856.

The petition is **granted.**

/Henry C. Yuen/

_____

Henry C. Yuen, Special Programs Examiner
Technology Center 3700 – Mechanical Engineering,
Manufacturing and Products
571-272-4856

UNITED STATES PATENT AND TRADEMARK OFFICE

Commissioner for Patents
United States Patent and Trademark Office
P.O. Box 1450
Alexandria, VA 22313-1450
www.uspto.gov

THE NATH LAW GROUP
112 SOUTH WEST STREET
ALEXANDRIA VA 22314

MAILED

OCT 06 2010

OFFICE OF PETITIONS

In re Application of :
Thyagarajan et al. :
Application No. 12/613,430 : DECISION ON PETITION
Filed: November 5, 2009 TO WITHDRAW FROM RECORD
Attorney Docket No. 93114U :
:

This is a decision on the Request to Withdraw as attorney or agent of record under 37 C.F.R. § 1.36(b), filed July 29, 2010.

The request is **APPROVED**.

A grantable request to withdraw as attorney/agent of record must be signed by every attorney/agent seeking to withdraw or contain a clear indication that one attorney is signing on behalf of another/others. The Office will require the practitioner(s) to certify that he, she or they have: (1) given reasonable notice to the client, prior to the expiration of the reply period, which the practitioner(s) intends to withdraw from employment; (2) delivered to the client or a duly authorized representative of the client all papers and property (including funds) to which the client is entitled; and (3) notified the client of any replies that may be due and the time frame within which the client must respond, pursuant to 37 CFR 10.40 (c).

The request was signed by Brooks Gifford, III, for Laurie A. Axford, on behalf of all attorneys of record who are associated with Customer Number 20529.

All attorneys/agents associated with the Customer Number 20529 have been withdrawn. Applicant is reminded that there is no attorney of record at this time.

All future correspondence will be directed to the assignee at the address indicated below.

Currently, there is no outstanding Office action that requires a reply.

Telephone inquiries concerning this decision should be directed to the undersigned at (571) 272-7751. All other inquires concerning either the examination or status of the application should be directed to the Technology Center.

Joan Olszewski
Petitions Examiner
Office of Petitions

cc: Micro USA, Inc.
Attn: Arjun Jain
12875 Brookprinter Place, #200
Poway, CA 92064

UNITED STATES PATENT AND TRADEMARK OFFICE

Commissioner for Patents
United States Patent and Trademark Office
P.O. Box 1450
Alexandria, VA 22313-1450
www.uspto.gov

MARSHALL, GERSTEIN & BORUN LLP
233 SOUTH WACKER DRIVE
6300 WILLIS TOWER
CHICAGO IL 60606-6357

MAILED

DEC 21 2010

OFFICE OF PETITIONS

In re Application of	:	
Carl W. Hastings	:	
Application No. 12/613,443	:	DECISION ON PETITION
Filed: November 5, 2009	:	TO MAKE SPECIAL UNDER
Attorney Docket No. 30106/44269A	:	37 CFR 1.102(c)(1)
	:	

This is a decision on the petition under 37 CFR 1.102(c)(1), filed November 18, 2010, to make the above-identified application special based on applicant's age as set forth in M.P.E.P. § 708.02, Section IV.

The petition is **GRANTED**.

A grantable petition to make an application special under 37 CFR 1.102(c)(1) and MPEP § 708.02, Section IV: Applicant's Age must be accompanied by evidence showing that at least one of the applicants is 65 years of age, or more, such as a birth certificate or a statement by applicant. No fee is required

The instant petition includes a statement from the attorney of record certifying that he is in possession of evidence, and will retain such in the application file record, that shows the inventor is 65 years of age or older. Accordingly, the above-identified application has been accorded "special" status.

Telephone inquiries concerning this decision should be directed to Terri Johnson at 571-272-2991.

All other inquiries concerning either the examination or status of the application should be directed to the Technology Center.

The application is being forwarded to the Technology Center Art Unit 1776 for action on the merits commensurate with this decision.

/Terri Johnson/
Terri Johnson
Petitions Examiner
Office of Petitions

UNITED STATES PATENT AND TRADEMARK OFFICE

Commissioner for Patents
United States Patent and Trademark Office
P.O. Box 1450
Alexandria, VA 22313-1450
www.uspto.gov

ESCO CORPORATION
2141 NW 25TH AVENUE
P.O. BOX 10123
PORTLAND OR 97210

MAILED

APR 26 2011

PCT LEGAL ADMINISTRATION

In re Application of :
Charles G. Ollinger IV, et al. :
Application No. 12/613,467 : DECISION ON PETITION
Filed: November 05, 2009 : UNDER 37 CFR 1.78(a)(3)
Attorney Docket No. 372 :

This is a decision on the petition under 37 CFR 1.78(a)(3), filed 08 February 2011, to accept an unintentionally delayed claim under 35 U.S.C. § 120 for the benefit of priority to the prior-filed international application set forth in the amendment filed concurrently with the instant petition.

The petition under 37 CFR 1.78(a)(3) is DISMISSED without prejudice.

The present nonprovisional application was filed after November 29, 2000, and the claim herein for the benefit of priority to the prior-filed applications is submitted after expiration of the period specified in 37 CFR 1.78(a)(2)(ii). Therefore, this is a proper petition under 37 CFR 1.78(a)(3).

A petition for acceptance of a claim for late priority under 37 CFR 1.78(a)(3) is only applicable to those applications filed on or after November 29, 2000. Further, the petition is appropriate only after the expiration of the period specified in 37 CFR 1.78(a)(2)(ii). In addition, the petition under 37 CFR 1.78(a)(3) must be accompanied by:

(1) the reference required by 35 U.S.C. § 120 and 37 CFR 1.78(a)(2)(i) of the prior-filed application, unless previously submitted;

(2) the surcharge set forth in § 1.17(t); and

(3) a statement that the entire delay between the date the claim was due under 37 CFR 1.78(a)(2)(ii) and the date the claim was filed was unintentional. The Director may require additional information where there is a question whether the delay was unintentional.

The petition fails to comply with item (1) above.

The petition fails to comply with item (1) above in that applicant has failed to provide an

amendment to the first sentence(s) of the specification (37 CFR 1.121) or a supplemental application data sheet (37 CFR 1.76) adding the priority claims. Applicant's request that page one of the specification be amended to include the desired priority claim is contained in the filed petition. Pursuant to 37 CFR 1.121(h) each section of an amendment document must begin on a separate sheet.

Therefore, before the petition under 37 CFR § 1.78(a)(3) can be granted, a renewed petition and either an Application Data Sheet (37 CFR 1.76(a)(5)) or a proper amendment (complying with the provisions of 37 CFR 1.121) to correct the above matters are required.

Any further correspondence with respect to this matter may be filed electronically via EFS-Web selecting the document description "Petition for review and processing by the PCT Legal Office" or by mail addressed to Mail Stop PCT, Commissioner for Patents, Office of PCT Legal Administration, P.O. Box 1450, Alexandria, Virginia 22313-1450, with the contents of the letter marked to the attention of the Office of PCT Legal Administration.

Any questions concerning this matter may be directed to Derek A. Putonen at (571) 272-3294.

Bryan Lin
PCT Legal Examiner
Office of PCT Legal Administration

UNITED STATES PATENT AND TRADEMARK OFFICE

Commissioner for Patents
United States Patent and Trademark Office
P.O. Box 1450
Alexandria, VA 22313-1450
www.uspto.gov

ESCO CORPORATION
2141 NW 25TH AVENUE
P.O. BOX 10123
PORTLAND OR 97210

MAILED

JUN 21 2011

PCT LEGAL ADMINISTRATION

In re Application of :
Charles G. Ollinger IV, et al. :
Application No. 12/613,467 : DECISION ON PETITION
Filed: November 05, 2009 :
Attorney Docket No. 372 :

This is a decision on the renewed petition under 37 CFR 1.78(a)(3) and (a)(6) filed 12 May 2011, to accept an unintentionally delayed claim under 35 U.S.C. §§ 120 and 119(e) for the benefit of the prior-filed international application and provisional applications.

The renewed petition is GRANTED.

The present nonprovisional application was filed after November 29, 2000, and the claim herein for the benefit of priority to the prior-filed nonprovisional applications is submitted after expiration of the period specified in 37 CFR 1.78(a)(2)(ii) and 1.78(a)(5)(ii). Therefore, this is a proper petition under 37 CFR 1.78(a)(3) and 1.78(a)(6).

A petition for acceptance of a claim for late priority under 37 CFR §§ 1.78(a)(3) and 1.78(a)(6) is only applicable to those applications filed on or after November 29, 2000. Further, the petition is appropriate only after the expiration of the period specified in 37 CFR §§ 1.78(a)(2)(ii) and 1.78(a)(5)(ii). In addition, the petition under 37 CFR §§ 1.78(a)(3) and 1.78(a)(6) must be accompanied by:

(1) the reference required by 35 U.S.C. §§ 120 and 119(e) and 37 CFR §§ 1.78(a)(2)(i) and 1.78(a)(5)(i) of the prior-filed application, unless previously submitted;
(2) the surcharge set forth in § 1.17(t); and
(3) a statement that the entire delay between the date the claim was due under 37 CFR §§ 1.78(a)(2)(ii) and 1.78(a)(5)(ii) and the date the claim was filed was unintentional. The Director may require additional where there is a question whether the delay was unintentional.

Applicant previously satisfied items 2 and 3.

The renewed petition complies with the requirements for a grantable petition under 37 CFR §§1.78(a)(3) and 1.78(a)(6) in that (1) a proper reference to the prior-filed applications

has been included in an amendment to the first sentence of the specification, as provided by 37 CFR §§ 1.78(a)(2)(iii) and 1.78(a)(5)(iii). Accordingly, having found that the petition for acceptance of an unintentionally delayed claim for the benefit of priority under 35 U.S.C. §§ 120 and 119(e) to the prior-filed applications satisfies the conditions of 37 CFR §§ 1.78(a)(3) and 1.78(a)(6), the renewed petition is granted.

The granting of the petition to accept the delayed benefit claim to the prior-filed applications under 37 CFR §§ 1.78(a)(3) and 1.78(a)(6) should not be construed as meaning that this application is entitled to the benefit of the filing date of the prior-filed applications. In order for this application to be entitled to the benefit of the prior-filed applications, all other requirements under 35 U.S.C. §§120 and 365(c) and 1.78(a)(1) and (a)(2) and under 35 U.S.C. §119(e) and 37 CFR 1.78(a)(4) and (a)(5) must be met. Similarly, the fact that the corrected Filing Receipt accompanying this decision on petition includes the prior-filed applications should not be construed as meaning that applicant is entitled to the claim for benefit of priority to the prior-filed applications noted thereon. Accordingly, the examiner will, in due course, consider this benefit claim and determine whether this application is entitled to the benefit of the earlier filing date.

A corrected Filing Receipt, which includes the priority claim to the prior-filed applications, accompanies this decision on petition.

Any questions concerning this matter may be directed to Derek A. Putonen at (571) 272-3294. All other inquiries concerning either the examination procedures or status of the application should be directed to the Technology Center.

This matter is being referred to Technology Center Art Unit 3671 for appropriate action on the amendment submitted May 12, 2011, including consideration by the examiner of the claim for benefit of the prior-filed applications.

Bryan Lin
PCT Legal Examiner
Office of PCT Legal Administration

UNITED STATES PATENT AND TRADEMARK OFFICE

Commissioner for Patents
United States Patent and Trademark Office
P.O. Box 1450
Alexandria, VA 22313-1450
www.uspto.gov

SCHLUMBERGER OILFIELD SERVICES
200 GILLINGHAM LANE
MD 200-9
SUGAR LAND, TX 77478

MAILED
SEP 27 2010
OFFICE OF PETITIONS

In re Application of :
Benoit Froelich :
Application No. 12/613,548 : DECISION ON PETITION
Filed: November 6, 2009 :
Attorney Docket No. 21.1645 :

This is a decision on the petition under the unintentional provisions of 37 CFR 1.137(b), filed August 12, 2010, to revive the above-identified application.

There is no indication that the person signing the instant petition was ever given a power of attorney or authorization of agent to prosecute the above-identified application. In accordance with 37 CFR 1.34(a), the signature appearing on the petition shall constitute a representation to the United States Patent and Trademark Office that he/she is authorized to represent the particular party in whose behalf he/she acts. However, if petitioner desires to receive future correspondence regarding this application, the appropriate power of attorney or authorization of agent must be submitted. All future correspondence regarding this application file will be directed solely to the address of record until otherwise instructed.

The application became abandoned for failure to reply in a timely manner to the Notice to File Missing Parts of Non-provisional Application (Notice), mailed November 30, 2009. The Notice set a period for reply of two (2) months from the mail date of the Notice. No extensions of time under the provisions of 37 CFR 1.136(a) were obtained. Accordingly, the application became abandoned on January 31, 2010.

The petition satisfies the requirements of 37 CFR 1.137(b) in that petitioner has supplied (1) the reply in the form of a reply, (2) the petition fee of $1620, and (3) a proper statement of unintentional delay.

In view of the above, the petition is **GRANTED**.

Telephone inquiries concerning this decision should be directed to undersigned at (571) 272-1642. All other inquiries concerning the examination or status of this application should be directed to the Office of Patent Application Processing at their hotline 571-272-4000.

This application is being referred back to the Office of Patent Application Processing for pre-examination processing of the reply received August 12, 2010.

April M. Wise
Petitions Examiner
Office of Petitions

UNITED STATES PATENT AND TRADEMARK OFFICE

Commissioner for Patents
United States Patent and Trademark Office
P.O. Box 1450
Alexandria, VA 22313-1450
www.uspto.gov
DIW Jun-11

GABE CHERIAN
P.O. BOX 1335
SUN VALLEY ID 83353

MAILED
JUN 29 2011
OFFICE OF PETITIONS

In re Application of :
Gabe Cherian :
Application No. 12/613,549 : ON PETITION
Filed: 11/06/2009 :
Attorney Docket No. PTI-2 :
:

This is a decision in response to the petition under 37 CFR 1.137(b) filed on June 1, 2011, to revive the above-identified application.

The petition is **GRANTED**.

This application became abandoned on January 31, 2010, for failure to timely file a reply to the Notice to File Corrected Application Papers mailed on November 30, 2009, which set a two (2)-month shortened period for reply. No extensions of the time for reply in accordance with 37 CFR 1.136(a) were obtained. Notice of Abandonment was mailed on August 6, 2010.

Receipt of the reply filed on June 1, 2011 is acknowledged.

The application is referred to the Office of Patent Application Processing for further processing.

Telephone inquiries concerning this matter may be directed to the undersigned at (571) 272-3231.

Douglas I. Wood
Senior Petitions Attorney
Office of Petitions

UNITED STATES PATENT AND TRADEMARK OFFICE

UNITED STATES DEPARTMENT OF COMMERCE
United States Patent and Trademark Office
Address: COMMISSIONER FOR PATENTS
P.O. Box 1450
Alexandria, Virginia 22313-1450
www.uspto.gov

APPLICATION NO.	FILING DATE	FIRST NAMED INVENTOR	ATTORNEY DOCKET NO.	CONFIRMATION NO.
12/613,590	11/06/2009	Hiroaki Nagasaki	US-415	6640

38108 7590 11/18/2010

CERMAK NAKAJIMA LLP
ACS LLC
127 S. Peyton Street
Suite 210
ALEXANDRIA, VA 22314

EXAMINER	
ART UNIT	PAPER NUMBER
1654	

NOTIFICATION DATE	DELIVERY MODE
11/18/2010	ELECTRONIC

Please find below and/or attached an Office communication concerning this application or proceeding.

The time period for reply, if any, is set in the attached communication.

Notice of the Office communication was sent electronically on above-indicated "Notification Date" to the following e-mail address(es):

cgoode@cermaknakajima.com
ip@cermaknakajima.com
scermak@cermaknakajima.com

UNITED STATES PATENT AND TRADEMARK OFFICE

Commissioner for Patents
United States Patent and Trademark Office
P.O. Box 1450
Alexandria, VA 22313-1450
www.uspto.gov

NOV 1 8 2010

CERMAK NAKAJIMA LLP
ACS LLC
127 S. Peyton Street
Suite 210
ALEXANDRIA VA 22314

In re Application of	:	
NAGASAKI, HIROAKI et. al.	:	DECISION ON REQUEST TO
Application No. 12/613,590	:	PARTICIPATE IN PCT-PATENT
Filed: November 6, 2009	:	PROSECUTION HIGHWAY PILOT
Attorney Docket No. US-415	:	PROGRAM AND PETITION
	:	TO MAKE SPECIAL UNDER
	:	37 CFR 1.102(d)

This is a decision on the request to participate in the PCT-Patent Prosecution Highway (PPH) Pilot program and the petition under 37 CFR 1.102(d), filed July 27, 2010, to make the above-identified application special.

The request and petition are **GRANTED**.

A grantable request to participate in the PCT- PPH Pilot program and petition to make special require:

(1) The U.S. application is a national stage entry of the corresponding JPO PCT application;
(2) The latest work product in the international phase of the PCT application corresponding to the US application, namely the WO/ISA, or the WO/IPEA, or the IPER, indicates at least one claim in the PCT claim has novelty, inventive step and industrial applicability.
(3) Applicant must submit a copy of the allowable/patentable claim(s) from the corresponding PCT application(s) along with an English translation thereof;
(4) All the claims in the U.S. application must sufficiently correspond or be amended to sufficiently correspond to the allowable/patentable claim(s) in the PCT application;
(5) Examination of the U.S. application has not begun;
(6) Unless already filed in the U.S. application for which participation in the PCT-PPH pilot program is requested, applicant must submit a copy of the latest international work product, WO/ISA, or WO/IPEA or IPER, which indicated that the claim(s) has/have novelty, inventive step and industrial applicability along with an English translation thereof;
(7) Applicant must submit an IDS listing the documents cited international work product, WO/ISA, or WO/IPEA or IPER along with copies of documents except U.S. patents or U.S. patent application publications; and

The request to participate in the PCT-PPH Pilot program and petition comply with the above requirements. Accordingly, the above-identified application has been accorded "special" status.

Telephone inquiries concerning this decision should be directed to Ram R. Shukla at 571-272-0735.

All other inquiries concerning the examination or status of the application should be directed to Patent Application Information Retrieval (PAIR) system at the http://www.uspto.gov/ebc/index.html.

The application is being forwarded to the examiner for action on the merits commensurate with this decision.

RAM R. SHUKLA, PH.D.
SUPERVISORY PATENT EXAMINER

Ram R. Shukla, Ph.D.
Supervisory Patent Examiner
TC 1600

UNITED STATES PATENT AND TRADEMARK OFFICE

Commissioner for Patents
United States Patent and Trademark Office
P.O. Box 1450
Alexandria, VA 22313-1450
www.uspto.gov

MEGAN LYMAN
1816 SILVER MIST CT.
RALEIGH, NC 27613

MAILED

APR 20 2011

OFFICE OF PETITIONS

In re Application of	:	
Jennifer A. Ritchie	:	DECISION ON PETITION
Application No. 12/613,593	:	TO WITHDRAW
Filed: November 6, 2009	:	FROM RECORD
Attorney Docket No. 1048.2	:	

This is a decision on the Request to Withdraw as attorney or agent of record under 37 C.F.R. § 1.36(b), filed April 4, 2011.

The request is **APPROVED**.

A grantable request to withdraw as attorney/agent of record must be signed by every attorney/agent seeking to withdraw or contain a clear indication that one attorney is signing on behalf of another/others. The Office will require the practitioner(s) to certify that he, she or they have: (1) given reasonable notice to the client, prior to the expiration of the reply period, which the practitioner(s) intends to withdraw from employment; (2) delivered to the client or a duly authorized representative of the client all papers and property (including funds) to which the client is entitled; and (3) notified the client of any replies that may be due and the time frame within which the client must respond, pursuant to 37 CFR 10.40 (c).

The request was signed by Megan Lyman on behalf of all the practitioners of record associated with Customer Number 68533.

Customer Number 68533 has been withdrawn as attorney from record. Applicant is reminded that there is no attorney of record at this time.

The correspondence address of record has been changed and the new correspondence address is the address indicated below.

There are no outstanding Office actions that require a reply.

Telephone inquires concerning this decision should be directed to the undersigned at (571) 272-6059. All other inquires concerning either the examination or status of the application should be directed to the Technology Center.

Alicia Kelley
Petitions Examiner
Office of Petitions

cc: JENNIFER RITCHIE
27111 ALISO CREEK ROAD, STE. 195
ALISO VIEJO, CA 92656

UNITED STATES PATENT AND TRADEMARK OFFICE

UNITED STATES DEPARTMENT OF COMMERCE
United States Patent and Trademark Office
Address: COMMISSIONER FOR PATENTS
P.O. Box 1450
Alexandria, Virginia 22313-1450
www.uspto.gov

APPLICATION NUMBER	FILING OR 371(C) DATE	FIRST NAMED APPLICANT	ATTY. DOCKET NO./TITLE
12/613,593	11/06/2009	Jennifer A. Ritchie	1048.2

CONFIRMATION NO. 6649

68533
MEGAN LYMAN
1816 SILVER MIST CT.
RALEIGH, NC 27613

POWER OF ATTORNEY NOTICE

OC000000047252728

Date Mailed: 04/20/2011

NOTICE REGARDING CHANGE OF POWER OF ATTORNEY

This is in response to the Power of Attorney filed 04/04/2011.

- The withdrawal as attorney in this application has been accepted. Future correspondence will be mailed to the new address of record. 37 CFR 1.33.

/atkelley-collier/

Office of Data Management, Application Assistance Unit (571) 272-4000, or (571) 272-4200, or 1-888-786-0101

UNITED STATES PATENT AND TRADEMARK OFFICE

UNITED STATES DEPARTMENT OF COMMERCE
United States Patent and Trademark Office
Address: COMMISSIONER FOR PATENTS
P.O. Box 1450
Alexandria, Virginia 22313-1450
www.uspto.gov

APPLICATION NO.	FILING DATE	FIRST NAMED INVENTOR	ATTORNEY DOCKET NO.	CONFIRMATION NO.
12/613,603	11/06/2009	Takashi Amano	TMCI-10802/08	6670

25006 7590 05/12/2011

GIFFORD, KRASS, SPRINKLE,ANDERSON & CITKOWSKI, P.C
PO BOX 7021
TROY, MI 48007-7021

EXAMINER	
WALTERS, JOHN DANIEL	

ART UNIT	PAPER NUMBER
3618	

MAIL DATE	DELIVERY MODE
05/12/2011	PAPER

Please find below and/or attached an Office communication concerning this application or proceeding.

The time period for reply, if any, is set in the attached communication.

UNITED STATES PATENT AND TRADEMARK OFFICE

Commissioner for Patents
United States Patent and Trademark Office
P.O. Box 1450
Alexandria, VA 22313-1450
www.uspto.gov

MAY 12 2011

GIFFORD, KRASS, SPRINKLE,
ANDERSON & CITKOWSKI, P.C
PO BOX 7021
TROY MI 48007-7021

In re application of	:	**DECISION ON REQUEST TO**
Amano et al.	:	**PARTICIPATE IN PATENT**
Application No. 12/613,603	:	**PROSECUTION HIGHWAY**
Filed: November 06, 2009	:	**PROGRAM AND PETITION**
For: MOTOR VEHICLE AND CONTROL METHOD OF MOTOR VEHICLE	:	**TO MAKE SPECIAL UNDER 37 CFR 1.102(a)**

This is a decision on the request to participate in the Patent Prosecution Highway (PPH) program and the petition under 37 CFR 1.102(a), filed April 26, 2011, to make the above-identified application special.

The request and petition are **GRANTED**.

A grantable request to participate in the PPH program and petition to make special require:

(1) The U.S. application must validly claim priority under 35 U.S.C. 119(a) to one or more applications filed in the JPO;
(2) Applicant must submit a copy of the allowable/patentable claim(s) from the JPO application(s) along with an English translation thereof and a statement that the English translation is accurate;
(3) All the claims in the U.S. application must sufficiently correspond or be amended to sufficiently correspond to the allowable/patentable claim(s) in the JPO application(s);
(4) Examination of the U.S. application has not begun;
(5) Applicant must submit a copy of the latest Office action from each of the JPO application(s) containing the allowable/patentable claim(s) along with an English translation thereof and a statement that the English translation is accurate;
(6) Applicant must submit an IDS listing the documents cited by the JPO examiner in the JPO Office action along with copies of documents except U.S. patents or U.S. patent application publications.

In light of the preliminary amendment filed April 26, 2011. The request to participate in the PPH pilot program complies with the above requirements. Therefore, the above-identified application has been accorded "special" status.

All other inquiries concerning the examination or status of the application should be directed to the Patent Application Information Retrieval (PAIR) system.

The application is being forwarded to the examiner for action on the merits commensurate with this decision.

Any inquiry regarding this decision should be directed to Mikado Buiz, Quality Assurance Specialist, at (571) 272-6578.

/ Mikado Buiz /

Mikado Buiz,
Quality Assurance Specialist
Technology Center 3600

MB/MB: 05/12/11

UNITED STATES PATENT AND TRADEMARK OFFICE

Commissioner for Patents
United States Patent and Trademark Office
P.O. Box 1450
Alexandria, VA 22313-1450
www.uspto.gov

ALSTON & BIRD LLP
BANK OF AMERICA PLAZA
101 SOUTH TRYON STREET, SUITE 4000
CHARLOTTE, NC 28280-4000

MAILED

MAR 14 2011

OFFICE OF PETITIONS

In re Application of :
ROUSE, Alan S. et al. :
Application No. 12/613,620 : DECISION ON PETITION
Filed: November 06, 2009 : TO WITHDRAW
Attorney Docket No. **P29558-US1** : FROM RECORD
:

This is a decision on the Request to Withdraw as attorney or agent of record under 37 C.F.R. § 1.36(b), filed February 07, 2011.

The request is moot because a revocation of power of attorney has been previously filed.

A review of the file record indicates that the power of attorney to **ALSTON & BIRD LLP** has been revoked by the assignee of the patent application on February 14, 2011. Accordingly, the request to withdraw under 37 C.F.R. § 1.36(b) is moot.

All future communications from the Office will continue to be directed to the below-listed address until otherwise notified by applicant.

Telephone inquires concerning this decision should be directed to Tredelle Jackson at 571-272-2783.

/Tredelle D. Jackson/
Paralegal Specialist
Office of Petitions

cc: **ERICSSON INC.**
6300 LEGACY DRIVE
M/S EVR 1-C-11
PLANO TX 75024

Doc Code: PET.AUTO Document Description: Petition automatically granted by EFS-Web	PTO/SB/140 U.S. Patent and Trademark Office Department of Commerce

Electronic Petition Request	**PETITION TO WITHDRAW AN APPLICATION FROM ISSUE AFTER PAYMENT OF THE ISSUE FEE UNDER 37 CFR 1.313(c)**
Application Number	12613686
Filing Date	06-Nov-2009
First Named Inventor	Andre Kurs
Art Unit	2836
Examiner Name	HAL KAPLAN
Attorney Docket Number	WTCY-0026-P02
Title	WIRELESS ENERGY TRANSFER USING PLANAR CAPACITIVELY LOADED CONDUCTING LOOP RESONATORS

An application may be withdrawn from issue for further action upon petition by the applicant. To request that the Office withdraw an application from issue, applicant must file a petition under this section including the fee set forth in § 1.17(h) and a showing of good and sufficient reasons why withdrawal of the application from issue is necessary.

APPLICANT HEREBY PETITIONS TO WITHDRAW THIS APPLICATION FROM ISSUE UNDER 37 CFR 1.313(c).

A grantable petition requires the following items:
(1) Petition fee; and
(2) One of the following reasons:
(a) Unpatentability of one or more claims, which must be accompanied by an unequivocal statement that one or more claims are unpatentable, an amendment to such claim or claims, and an explanation as to how the amendment causes such claim or claims to be patentable;
(b) Consideration of a request for continued examination in compliance with § 1.114 (for a utility or plant application only); or
(c) Express abandonment of the application. Such express abandonment may be in favor of a continuing application, but not a CPA under 37 CFR 1.53(d).

Petition Fee

☐ Applicant claims SMALL ENTITY status. See 37 CFR 1.27.

☐ Applicant is no longer claiming SMALL ENTITY status. See 37 CFR 1.27(g)(2).

☐ Applicant(s) status remains as SMALL ENTITY.

☒ Applicant(s) status remains as other than SMALL ENTITY

Reason for withdrawal from issue

◯ One or more claims are unpatentable ◉ Consideration of a request for continued examination (RCE) (List of Required Documents and Fees) ◯ Applicant hereby expressly abandons the instant application (any attorney/agent signing for this reason must have power of attorney pursuant to 37 CFR 1.32(b)).
RCE request,submission, and fee. ☐ I certify, in accordance with 37 CFR 1.4(d)(4) that : The RCE request ,submission, and fee have already been filed in the above-identified application on ☒ Are attached.
THIS PORTION MUST BE COMPLETED BY THE SIGNATORY OR SIGNATORIES I certify, in accordance with 37 CFR 1.4(d)(4) that I am: ◉ An attorney or agent registered to practice before the Patent and Trademark Office who has been given power of attorney in this application. ◯ An attorney or agent registered to practice before the Patent and Trademark Office, acting in a representative capacity. ◯ A sole inventor ◯ A joint inventor; I certify that I am authorized to sign this submission on behalf of all of the inventors ◯ A joint inventor; all of whom are signing this e-petition ◯ The assignee of record of the entire interest that has properly made itself of record pursuant to 37 CFR 3.71

Signature	/John Nortrup/
Name	John H. Nortrup
Registration Number	59063

UNITED STATES PATENT AND TRADEMARK OFFICE

Commissioner for Patents
United States Patent and Trademark Office
P.O. Box 1450
Alexandria, VA 22313-1450
www.uspto.gov

Decision Date : May 2,2011

In re Application of :

Andre Kurs

DECISION ON PETITION

UNDER CFR 1.313(c)(2)

Application No : 12613686

Filed : 06-Nov-2009

Attorney Docket No : WTCY-0026-P02

This is an electronic decision on the petition under 37 CFR 1.313(c)(2), filed May 2,2011 , to withdraw the above-identified application from issue after payment of the issue fee.

The petition is **GRANTED.**

The above-identified application is withdrawn from issue for consideration of a submission under 37 CFR 1.114 (request for continued examination). See 37 CFR 1.313(c)(2).

Petitioner is advised that the issue fee paid in this application cannot be refunded. If, however, this application is again allowed, petitioner may request that it be applied towards the issue fee required by the new Notice of Allowance.

Telephone inquiries concerning this decision should be directed to the Patent Electronic Business Center (EBC) at 866-217-9197.

This application file is being referred to Technology Center AU 2836 for processing of the request for continuing examination under 37 CFR 1.114 .

Office of Petitions

Doc Code: PET.AUTO Document Description: Petition automatically granted by EFS-Web	PTO/SB/140 U.S. Patent and Trademark Office Department of Commerce

Electronic Petition Request	**PETITION TO WITHDRAW AN APPLICATION FROM ISSUE AFTER PAYMENT OF THE ISSUE FEE UNDER 37 CFR 1.313(c)**
Application Number	12613725
Filing Date	06-Nov-2009
First Named Inventor	Shunpei Yamazaki
Art Unit	2871
Examiner Name	JAMES DUDEK
Attorney Docket Number	07977-0084004 / US3151D1D
Title	LIQUID CRYSTAL DISPLAY AND METHOD OF DRIVING SAME

An application may be withdrawn from issue for further action upon petition by the applicant. To request that the Office withdraw an application from issue, applicant must file a petition under this section including the fee set forth in § 1.17(h) and a showing of good and sufficient reasons why withdrawal of the application from issue is necessary.

APPLICANT HEREBY PETITIONS TO WITHDRAW THIS APPLICATION FROM ISSUE UNDER 37 CFR 1.313(c).

A grantable petition requires the following items:
(1) Petition fee; and
(2) One of the following reasons:
(a) Unpatentability of one or more claims, which must be accompanied by an unequivocal statement that one or more claims are unpatentable, an amendment to such claim or claims, and an explanation as to how the amendment causes such claim or claims to be patentable;
(b) Consideration of a request for continued examination in compliance with § 1.114 (for a utility or plant application only); or
(c) Express abandonment of the application. Such express abandonment may be in favor of a continuing application, but not a CPA under 37 CFR 1.53(d).

Petition Fee

☐ Applicant claims SMALL ENTITY status. See 37 CFR 1.27.

☐ Applicant is no longer claiming SMALL ENTITY status. See 37 CFR 1.27(g)(2).

☐ Applicant(s) status remains as SMALL ENTITY.

☒ Applicant(s) status remains as other than SMALL ENTITY

Reason for withdrawal from issue

◯ One or more claims are unpatentable ◉ Consideration of a request for continued examination (RCE) (List of Required Documents and Fees) ◯ Applicant hereby expressly abandons the instant application (any attorney/agent signing for this reason must have power of attorney pursuant to 37 CFR 1.32(b)).	
RCE request,submission, and fee. ☐ I certify, in accordance with 37 CFR 1.4(d)(4) that : The RCE request ,submission, and fee have already been filed in the above-identified application on ☒ Are attached.	
THIS PORTION MUST BE COMPLETED BY THE SIGNATORY OR SIGNATORIES I certify, in accordance with 37 CFR 1.4(d)(4) that I am: ◯ An attorney or agent registered to practice before the Patent and Trademark Office who has been given power of attorney in this application. ◉ An attorney or agent registered to practice before the Patent and Trademark Office, acting in a representative capacity. ◯ A sole inventor ◯ A joint inventor; I certify that I am authorized to sign this submission on behalf of all of the inventors ◯ A joint inventor; all of whom are signing this e-petition ◯ The assignee of record of the entire interest that has properly made itself of record pursuant to 37 CFR 3.71	
Signature	/John F. Hayden/
Name	John F. Hayden
Registration Number	37640

UNITED STATES PATENT AND TRADEMARK OFFICE

Commissioner for Patents
United States Patent and Trademark Office
P.O. Box 1450
Alexandria, VA 22313-1450
www.uspto.gov

Decision Date : November 17,2011

In re Application of :

Shunpei Yamazaki

DECISION ON PETITION

UNDER CFR 1.313(c)(2)

Application No : 12613725

Filed : 06-Nov-2009

Attorney Docket No : 07977-0084004 / US3151D1D

This is an electronic decision on the petition under 37 CFR 1.313(c)(2), filed November 17,2011 to withdraw the above-identified application from issue after payment of the issue fee.

The petition is **GRANTED.**

The above-identified application is withdrawn from issue for consideration of a submission under 37 CFR 1.114 (request for continued examination). See 37 CFR 1.313(c)(2).

Petitioner is advised that the issue fee paid in this application cannot be refunded. If, however, this application is again allowed, petitioner may request that it be applied towards the issue fee required by the new Notice of Allowance.

Telephone inquiries concerning this decision should be directed to the Patent Electronic Business Center (EBC) at 866-217-9197.

This application file is being referred to Technology Center AU 2871 for processing of the request for continuing examination under 37 CFR 1.114 .

Office of Petitions

UNITED STATES PATENT AND TRADEMARK OFFICE

Commissioner for Patents
United States Patent and Trademark Office
P.O. Box 1450
Alexandria, VA 22313-1450
www.uspto.gov

LESAVICH HIGH-TECH LAW GROUP, P.C.
Suite 325
39 S. LaSalle Street
Chicago, IL 60603

MAILED

JUN 14 2011

OFFICE OF PETITIONS

In re Application of
Leslie Rosenthal, et al.
Application No. 12/613,817
Filed: November 6, 2009
Attorney Docket No. 05,136-D

DECISION ON PETITION
TO WITHDRAW
FROM RECORD

This is a decision on the Request to Withdraw as attorney or agent of record under 37 C.F.R. § 1.36(b), filed May 4, 2011.

The request is **APPROVED**.

A grantable request to withdraw as attorney/agent of record must be signed by every attorney/agent seeking to withdraw or contain a clear indication that one attorney is signing on behalf of another/others. A request to withdraw will not be approved unless at least 30 (thirty) days would remain between the date of approval and the later of the expiration date of a time to file a response or the expiration date of the maximum time period which can be extended under 37 C.F.R. § 1.136(a).

The request was signed by Stephen Lesavich, Ph.D on behalf of all attorneys of record. All attorneys/agents have been withdrawn. Applicant is reminded that there is no attorney of record at this time.

All future communications from the Office will be directed to the assignee of the entire interest at the first copied address below until otherwise properly notified by the applicant.

Telephone inquiries concerning this decision should be directed to Terri Johnson at 571-272-2991.

/Terri Johnson/
Terri Johnson
Petitions Examiner
Office of Petitions

cc: **Rosenthal Collins Group, LLC (Assignee)**
c/o Mr. Gerry Fishman Esq. (General Counsel)
216 W. Jackson, Suite 400
Chicago, IL 60606

UNITED STATES PATENT AND TRADEMARK OFFICE

UNITED STATES DEPARTMENT OF COMMERCE
United States Patent and Trademark Office
Address: COMMISSIONER FOR PATENTS
P.O. Box 1450
Alexandria, Virginia 22313-1450
www.uspto.gov

APPLICATION NUMBER	FILING OR 371(C) DATE	FIRST NAMED APPLICANT	ATTY. DOCKET NO./TITLE
12/613,817	11/06/2009	Leslie Rosenthal	05,136-D

CONFIRMATION NO. 7139

POWER OF ATTORNEY NOTICE

32097
LESAVICH HIGH-TECH LAW GROUP, P.C.
SUITE 325
39 S. LASALLE STREET
CHICAGO, IL 60603

OC000000048069387

Date Mailed: 06/07/2011

NOTICE REGARDING CHANGE OF POWER OF ATTORNEY

This is in response to the Power of Attorney filed 05/04/2011.

- The withdrawal as attorney in this application has been accepted. Future correspondence will be mailed to the new address of record. 37 CFR 1.33.

/tsjohnson/

Office of Data Management, Application Assistance Unit (571) 272-4000, or (571) 272-4200, or 1-888-786-0101

UNITED STATES PATENT AND TRADEMARK OFFICE

Commissioner for Patents
United States Patent and Trademark Office
P.O. Box 1450
Alexandria, VA 22313-1450
www.uspto.gov

MAILED

OCT 08 2010

OFFICE OF PETITIONS

DR. HERBERT A. WERTHEIM
4470 SW 74TH AVE
MIAMI, FL 33155

In re Application of	:	
Wertheim et al.	:	
Application No. 12/613,859	:	ON PETITION
Filed: November 6, 2009	:	
Attorney Docket No. TG-4-PATENT	:	

This is a decision on the petition filed August 2, 2010, under 37 CFR 1.181 (no fee) requesting withdrawal of the holding of abandonment in the above-identified application.

The petition under 1.181 is **DISMISSED**.

Any request for reconsideration of this decision should be submitted within two (2) months from the mail date of this decision and be entitled "Renewed Petition to Withdraw the Holding of Abandonment under 37 CFR 1.181." *See* 37 CFR 1.181(f).

On November 20, 2009, the Office mailed a Notice to File Missing Parts of Nonprovisional Application (Notice), which set a two month shortened statutory period to reply. The application became abandoned on January 21, 2010, for failure to submit a timely response to the Notice. On July 28, 2010, the Office mailed a Notice of Abandonment.

In the present petition, petitioner requests that the Office withdraw the holding of abandonment due to nonreceipt of the Notice to File Missing Parts of Nonprovisional Application. Specifically, petitioner asserts that the Notice mailed November 20, 2009, was not received.

DISCUSSION OF PETITION TO WITHDRAW THE HOLDING OF ABANDONMENT

A review of the record indicates no irregularity in the mailing of the Notice and in the absence of any irregularity in the mailing, there is a strong presumption that the Office action was properly mailed to the address of record.

As petitioner is a pro-se applicant, the Office understands that petitioner may not keep a formal docket record system for his correspondence. Nevertheless, petitioner must provide some sort of showing explaining the manner in which petitioner receives mail from the USPTO, maintains files for patent matters, and treats mail received for such matter. Specifically, petitioner must explain the system for keeping track of patent matters - where petitioner keeps the correspondence; where he writes down due dates; how he knows replies are due, etc. In essence, petitioner must explain how

he reminds himself of response due dates and show that the due date for the Notice of November 20, 2009, was not entered into that system. Petitioner should include any available documentary evidence of the mail received, covering a reasonable period after November 20, 2009, to demonstrate nonreceipt of the Notice. Petitioner should also provide the USPTO with copies of any records or other methods, which could serve as a reminder of the due date for a response to an Office action,

and where petitioner would have entered the receipt date of the Office action had petitioner received it (for example, a copy of the outside of a file or a calendar maintained by petitioner), if these documents are available. Furthermore, petitioner must include a statement from himself, or any other person at the address who may have handled the Office action, indicating that a search was conducted of the location where the correspondence from the USPTO would have been kept; however, the Notice was not found. Lastly, petitioner must state that he was, in fact, residing at the correspondence address of record for a reasonable time after November 20, 2008; the period when he would have received the Notice.

As the petition is not signed by all the inventors, the petitioner's attention is directed to 37 CFR 1.33(b), which states that Amendments and other papers filed in the application, must be signed by:

> (1) A registered patent attorney or patent agent of record appointed in compliance with § 1.32(b);
> (2) A registered patent attorney or patent agent not of record who acts in a representative capacity under the provisions of § 1.34;
> (3) An assignee as provided for under §3.71(b) of this chapter; or
> (4) All of the applicants (§ 1.41(b)) for patent, unless there is an assignee of the entire interest and such assignee has taken action in the application in accordance with § 3.71 of this chapter.

Although the petitioner submitted a copy of a daily log, the log should be resubmitted in typewritten form so that it is legible. In the present petition, petitioner did not submit all of the required statements, legible documentary evidence that specifically identifies the above mentioned application, an explanation of his method for tracking due dates for filing responses to communications from the USPTO to show that the Notice was not received.

In view of the above, the request to withdraw of the holding of abandonment in the above-identified application cannot be granted.

ALTERNATIVE VENUE

Petitioner is strongly encouraged to consider filing a petition under 37 CFR 1.137(b) to revive an unintentionally abandoned application instead of filing a renewed petition under 37 CFR 1.181 or a petition under 37 CFR 1.137(a).

A grantable petition pursuant to 37 CFR 1.137(b) must be accompanied by:

> (1) The reply required to the outstanding Office action or notice, unless previously filed. In nonprovisional utility application abandoned for failure to respond to a non-final Office action, the required reply may be met by filing either (A) an argument or amendment under 37 CFR 1.111 or (B) a continuing application under 37 CFR 1.53(b).
>
> (2) The petition fee as set forth in 37 CFR 1.17(m), **$810.00 for a small entity**;
>
> (3) A statement that the entire delay in filing the required reply from the due date for the reply until the filing of a grantable petition was unintentional. The Director may require additional information where there is a question whether the delay was unintentional.

A form for filing a petition to revive an unintentionally abandoned application accompanies this decision for petitioner's convenience. If petitioner desires to file a petition under 37 CFR 1.137(b) instead of filing a request for reconsideration, petitioner must complete the enclosed petition form (PTO/SB/64) and pay the $810.00 petition fee.

Petitioner may wish to consider hiring a registered patent attorney or agent to assist in the prosecution of this application. Additionally, petitioner is encouraged to contact the Inventors Assistance Center (IAC) by telephone at 800-786-9199 or 571-272-1000, Monday through Friday from 8:30 AM to 5:30 PM (EST). The IAC provides patent information and services to the public and is staffed by former Supervisory Patent Examiners and experienced Primary Examiners who answer general questions concerning patent examining policy and procedure.

Further correspondence with respect to this matter should be addressed as follows:

By Mail: Mail Stop Petition
Commissioner for Patents
P.O. Box 1450
Alexandria, VA 22313-1450

By Hand: Customer Service Window
Randolph Building
401 Dulany Street
Alexandria, VA 22314

By Fax: (571) 273-8300
Attn: Office of Petitions

Telephone inquiries related to this decision may be directed to Alicia Kelley at (571) 272-6059.

/Carl Friedman/
Carl Friedman
Petitions Examiner
Office of Petitions

Enclosures: Notice to File Missing Parts of Nonprovisional Application
Petition For Revival Of An Application For Patent Abandoned Unintentionally Under CFR 1.137(b); Form PTO/SB/64, Privacy Act Statement.

UNITED STATES PATENT AND TRADEMARK OFFICE

UNITED STATES DEPARTMENT OF COMMERCE
United States Patent and Trademark Office
Address: COMMISSIONER FOR PATENTS
P.O. Box 1450
Alexandria, Virginia 22313-1450
www.uspto.gov

APPLICATION NUMBER	FILING OR 371(C) DATE	FIRST NAMED APPLICANT	ATTY. DOCKET NO./TITLE
12/613,859	11/06/2009	Herbert A. Wertheim	TG-4-PATENT

CONFIRMATION NO. 7218

92084
Dr. Herbert A. Wertheim
4470 SW 74th Ave
Miami, FL 33155

FORMALITIES LETTER

OC000000038849646

Date Mailed: 11/20/2009

NOTICE TO FILE MISSING PARTS OF NONPROVISIONAL APPLICATION

FILED UNDER 37 CFR 1.53(b)

Filing Date Granted

Items Required To Avoid Abandonment:

An application number and filing date have been accorded to this application. The item(s) indicated below, however, are missing. Applicant is given **TWO MONTHS** from the date of this Notice within which to file all required items and pay any fees required below to avoid abandonment. Extensions of time may be obtained by filing a petition accompanied by the extension fee under the provisions of 37 CFR 1.136(a).

- The signature of the following inventor(s) is missing from the oath or declaration:
  William F. Moore, Phillip R. Bartick

The applicant needs to satisfy supplemental fees problems indicated below.

The required item(s) identified below must be timely submitted to avoid abandonment:

- To avoid abandonment, a surcharge (for late submission of filing fee, search fee, examination fee or oath or declaration) as set forth in 37 CFR 1.16(f) of **$65** for a small entity in compliance with 37 CFR 1.27, must be submitted with the missing items identified in this notice.

SUMMARY OF FEES DUE:

Total additional fee(s) required for this application is **$65** for a small entity
- **$65** Surcharge.

Replies should be mailed to:

Mail Stop Missing Parts
Commissioner for Patents
P.O. Box 1450
Alexandria VA 22313-1450

Registered users of EFS-Web may alternatively submit their reply to this notice via EFS-Web.
https://sportal.uspto.gov/authenticate/AuthenticateUserLocalEPF.html

For more information about EFS-Web please call the USPTO Electronic Business Center at **1-866-217-9197** or visit our website at http://www.uspto.gov/ebc.

If you are not using EFS-Web to submit your reply, you must include a copy of this notice.

/tvo/

Office of Data Management, Application Assistance Unit (571) 272-4000, or (571) 272-4200, or 1-888-786-0101

UNITED STATES PATENT AND TRADEMARK OFFICE

Commissioner for Patents
United States Patent and Trademark Office
P.O. Box 1450
Alexandria, VA 22313-1450
www.uspto.gov

DR. HERBERT A. WERTHEIM
4470 SW 74TH AVE
MIAMI, FL 33155

MAILED
DEC 10 2010
OFFICE OF PETITIONS

In re Application of :
Wertheim et al. :
Application No. 12/613,859 : ON PETITION
Filed: November 6, 2009 :
Attorney Docket No. TG-4-PATENT :

This is a decision on the petition under the unintentional provisions of 37 CFR 1.137(b), filed October 29, 2010, to revive the above-identified application.

The petition is **DISMISSED.**

Any request for reconsideration of this decision must be submitted within TWO (2) MONTHS from the mail date of this decision. Extensions of time under 37 CFR 1.136(a) are permitted. The reconsideration request should include a cover letter entitled "Renewed Petition under 37 CFR 1.137(b)." This is **not** a final agency action within the meaning of 5 U.S.C. § 704.

The application became abandoned for failure to reply in a timely manner to the Notice to File Missing Parts of Nonprovisional Application (Notice), mailed November 20, 2009. The Notice set a period for reply of two (2) months from the mail date of the Notice. No extensions of time under the provisions of 37 CFR 1.136(a) were obtained. Accordingly, the application became abandoned on January 21, 2010. A Notice of Abandonment was mailed July 28, 2010.

A grantable petition under 37 CFR 1.137(b) must be accompanied by: (1) the required reply, unless previously filed; (2) the petition fee as set forth in 37 CFR 1.17(m); and (3) a statement that the entire delay in filing the required reply from the due date for the reply until the filing of a grantable petition pursuant to 37 CFR 1.137(b) was unintentional. Where there is a question as to whether either the abandonment or the delay in filing a petition under 37 CFR 1.137 was unintentional, the Director may require additional information. See MPEP 711.03(c)(II)(C) and (D).

This petition lacks item (3) above. While the Office recognizes that the petitioner submitted a declaration and surcharge of $65 for late submission of the declaration, the statement of unintentional delay cannot be accepted at this time. The petition containing the statement of unintentional delay is signed by Herbert A. Wertheim, who is one of the applicants in the above-identified application. Petitioner's attention is directed to 37 CFR 1.33(b), which states:

Amendments and other papers filed in the application must be signed by:

(1) A registered patent attorney or patent agent of record appointed in compliance with § 1.32(b);
(2) A registered patent attorney or patent agent not of record who acts in a representative capacity under the provisions of § 1.34;
(3) An assignee as provided for under §3.71(b) of this chapter; or
(4) All of the applicants (§ 1.41(b)) for patent, unless there is an assignee of the entire interest and such assignee has taken action in the application in accordance with § 3.71 of this chapter.

As the petition is not signed by all the inventors and the record herein fails to disclose that petitioner herein (Herbert A. Wertheim) was properly given power of attorney to act on behalf of the other inventors, or that he is an assignee of the entire interest and has complied with the provisions of 37 CFR 3.73(b)[1], the petition is considered to not contain a proper statement of unintentional delay.

Further correspondence with respect to this matter should be addressed as follows:

By Mail: Mail Stop PETITION
Commissioner for Patents
P. O. Box 1450
Alexandria, VA 22313-1450

By Hand: U. S. Patent and Trademark Office
Customer Service Window, Mail Stop Petitions
Randolph Building
401 Dulany Street
Alexandria, VA 22314

By Internet: EFS-Web[2]

The centralized facsimile number is **(571) 273-8300.**

Telephone inquiries concerning this decision should be directed to the undersigned at (571) 272-6059.

Alicia Kelley
Petitions Examiner
Office of Petitions

[1] 37 CFR 3.73(b) provides that: (1) when an assignee seeks to take action in a matter before the Office, the assignee must establish its ownership of the property to the satisfaction of the Commissioner; (2) ownership is established by submitting to the Office, in the Office file related to the matter in which action is sought to be taken, documentary evidence of a chain of title from the original owner to the assignee (*e.g.*, copy of an executed assignment submitted for recording) or by specifying (*e.g.*, reel and frame number) where such evidence is recorded in the Office; (3) the submission establishing ownership must be signed by a party authorized to act on behalf of the assignee; and (4) documents submitted to establish ownership may be required to be recorded as a condition to permitting the assignee to take action in a matter pending before the Office.

[2] www.uspto.gov/ebc/efs_help.html (for help using EFS-Web call the Patent Electronic Business Center at (866) 217-9197)

UNITED STATES PATENT AND TRADEMARK OFFICE

Commissioner for Patents
United States Patent and Trademark Office
P.O. Box 1450
Alexandria, VA 22313-1450
www.uspto.gov

DR. HERBERT A. WERTHEIM
4470 SW 74TH AVE
MIAMI, FL 33155

MAILED

JAN 21 2011

OFFICE OF PETITIONS

In re Application of :
Wertheim et al. :
Application No. 12/613,859 : ON PETITION
Filed: November 6, 2009 :
Attorney Docket No. TG-4-PATENT :

This is a decision on the renewed petition under the unintentional provisions of 37 CFR 1.137(b), filed December 28, 2010, to revive the above-identified application.

The petition is **GRANTED.**

The application became abandoned for failure to reply in a timely manner to the Notice to File Missing Parts of Nonprovisional Application (Notice), mailed November 20, 2009. The Notice set a period for reply of two (2) months from the mail date of the Notice. No extensions of time under the provisions of 37 CFR 1.136(a) were obtained. Accordingly, the application became abandoned on January 21, 2010. A Notice of Abandonment was mailed July 28, 2010.

The petition satisfies the requirements of 37 CFR 1.137(b) in that petitioner has supplied (1) the reply in the form of a declaration and surcharge of $65, (2) the petition fee of $810, and (3) a proper statement of unintentional delay.

This application file is being referred to the Office of Patent Application Processing (OPAP) for further pre-examination processing.

Telephone inquiries concerning this decision should be directed to the undersigned at (571) 272-6059. Telephone inquiries related to OPAP processing should be directed to their hotline at (271) 272-4000

A. Kelley

Alicia Kelley
Petitions Examiner
Office of Petitions

UNITED STATES PATENT AND TRADEMARK OFFICE

Commissioner for Patents
United States Patent and Trademark Office
P.O. Box 1450
Alexandria, VA 22313-1450
www.uspto.gov

LESAVICH HIGH-TECH LAW GROUP, P.C.
SUITE 325
39 S. LASALLE STREET
CHICAGO IL 60603

MAILED

APR 11 2011

OFFICE OF PETITIONS

In re Application of :
WILLIAMS, Donald S. :
Application No. 12/613,879 : DECISION ON PETITION
Filed: November 06, 2009 : TO WITHDRAW
Attorney Docket No. **06,124-C** : FROM RECORD
:

This is a decision on the Request to Withdraw as attorney or agent of record under 37 C.F.R. § 1.36(b), filed March 15, 2011.

The request is **APPROVED**.

A grantable request to withdraw as attorney/agent of record must be signed by every attorney/agent seeking to withdraw or contain a clear indication that one attorney is signing on behalf of another/others. The Office requires the practitioner(s) requesting withdrawal to certify that he, she, or they have: (1) given reasonable notice to the client, prior to the expiration of the response period, that the practitioner(s) intends to withdraw from employment; (2) delivered to the client or a duly authorized representative of the client all papers and property (including funds) to which the client is entitled; and (3) notified the client of any responses that may be due and the time frame within which the client must respond, pursuant 37 CFR 10.40(c).

The request was signed by Stephen Lesavich, the sole attorney of record. Stephen Lesavich has been withdrawn as attorney or agent of record. Applicant is reminded that there is no attorney of record at this time.

All future correspondence will be directed to the inventor Donald Williams at the address indicated below.

Telephone inquiries concerning this decision should be directed to Tredelle Jackson at 571-272-2783.

/Tredelle D. Jackson/
Paralegal Specialist
Office of Petitions

cc: **DONALD WILLIAMS**
C/O DURATEL, LLC
212 WEST KINZIE STREET 4TH FLOOR
CHICAGO IL 60654

UNITED STATES PATENT AND TRADEMARK OFFICE

Commissioner for Patents
United States Patent and Trademark Office
P.O. Box 1450
Alexandria, VA 22313-1450
www.uspto.gov

DEERE & COMPANY
ONE JOHN DEERE PLACE
MOLINE IL 61265

MAILED

SEP 08 2010

OFFICE OF PETITIONS

In re Application of :
William Allan Byrd :
Application No. 12/613,894 : DECISION ON PETITION
Filed: November 6, 2009 :
Attorney Docket No. 16215-US :

This is a decision on the petition under the unintentional provisions of 37 CFR 1.137(b), filed July 9, 2010, to revive the above-identified application.

The petition is **GRANTED**.

The above-identified application became abandoned for failure to reply in a timely manner to the Notice to File Missing Parts of Nonprovisional Application (Notice) mailed November 18, 2009. The Notice set a period for reply of two (2) months from the mail date of the Notice. No extensions of time under the provisions of 37 CFR 1.136(a) were obtained. Accordingly, the above-identified application became abandoned on January 19, 2010.

The petition satisfies the requirements of 37 CFR 1.137(b) in that petitioner has supplied (1) an Oath or Declaration and the $130.00 Surcharge fee, (2) the petition fee of $1,620.00, and (3) a proper statement of unintentional delay.

Telephone inquiries concerning this decision should be directed to the undersigned at (571) 272-7751.

This application is being referred to the Office of Patent Application Processing for further processing in accordance with this decision on petition.

Joan Olszewski
Petitions Examiner
Office of Petitions

UNITED STATES PATENT AND TRADEMARK OFFICE

Commissioner for Patents
United States Patent and Trademark Office
P.O. Box 1450
Alexandria, VA 22313-1450
www.uspto.gov

VIDAS ARRETT & STEINKRAUS PA
SUITE 400, 6640 SHADY OAK ROAD
EDEN PRAIRIE MN 55344

MAILED

JUN 09 2011

OFFICE OF PETITIONS

In re
Dirk Adam
Application No. 12/613,910
Filed: November 6, 2009
Attorney Docket No. H01.2-14680-US01

DECISION

This is a decision on the fee deficiency submission under 37 CFR 1.28(c), filed May 18, 2011.

The fee deficiency submission under 37 CFR 1.28 of $628 is hereby accepted.

The change of status to large entity has been entered.

Telephone inquiries concerning this matter may be directed to the undersigned at (571) 272-3207.

Cliff Congo
Petitions Attorney
Office of Petitions

UNITED STATES PATENT AND TRADEMARK OFFICE

UNITED STATES DEPARTMENT OF COMMERCE
United States Patent and Trademark Office
Address: COMMISSIONER FOR PATENTS
P.O. Box 1450
Alexandria, Virginia 22313-1450
www.uspto.gov

APPLICATION NO.	FILING DATE	FIRST NAMED INVENTOR	ATTORNEY DOCKET NO.	CONFIRMATION NO.
12/613,974	11/06/2009	Melanie REICH	029310.60947US	7467

23911 7590 08/29/2011
CROWELL & MORING LLP
INTELLECTUAL PROPERTY GROUP
P.O. BOX 14300
WASHINGTON, DC 20044-4300

EXAMINER	
GRAZIER, NYEEMAH A	

ART UNIT	PAPER NUMBER
1626	

MAIL DATE	DELIVERY MODE
08/29/2011	PAPER

Please find below and/or attached an Office communication concerning this application or proceeding.

The time period for reply, if any, is set in the attached communication.

AUG 29 2011

UNITED STATES PATENT AND TRADEMARK OFFICE

Commissioner for Patents
United States Patent and Trademark Office
P.O. Box 1450
Alexandria, VA 22313-1450

J. D. Evans
CROWELL & MORING LLP
INTELLECTUAL PROPERTY GROUP
P.O. BOX 14300
WASHINGTON DC 20044-4300

In re Application of	:
REICH	:Decision on Petition
Serial No.: 12/613,974	:
Filed : 6 November 2009	:
Attorney Docket No.:029310.60947US	:

This letter is in response to the Petition under 37 C.F.R. 1.144 filed on 29 April 2011 requesting reconsideration of the restriction requirement dated 13 September 2010.

BACKGROUND

This application was filed as a national application under 35 USC 111(a). As such, this application is entitled to US restriction practice.

On 13 September 2010, the examiner required a 2-way restriction between Claims 1-23.

On 10 October 2010, applicants elected Group I, with traverse.

On 7 December 2010, the examiner considered the traversal and made the restriction requirement final. Claims 22-23 were withdrawn from further consideration, pursuant to 37 CFR 1.142(b). Claims 1-21 were examined. Claim 5 was rejected under 35 U.S.C. 112, 2nd paragraph. Claims 7, 8, 12 and 14-21 were objected to for depending upon a rejected base claim. (No rejection was made for claims 7, 8, 12 and 14-21.) Claims 1-6, 9-11 and 13 were rejected under 35 U.S.C. 102(b) as being anticipated by Smith. Claims 1-6, 9-11 and 13 were provisionally rejected under nonstatutory double patenting.

On 29 April 2011, applicants filed a response and this petition.

DISCUSSION

The file history and petition have been considered carefully.

At the onset, it is noted that the Office must indicate exactly how an application is to be restricted. See MPEP 814.

> The examiner must provide a clear and detailed record of the restriction requirement to provide a clear demarcation between restricted inventions so that it can be determined whether inventions claimed in a continuing application are consonant with the restriction requirement and therefore subject to the prohibition against double patenting rejections under 35 U.S.C. 121. Geneva Pharms. Inc. v. GlaxoSmithKline PLC, 349 F.3d 1373, 1381, 68 USPQ2d 1865, 1871 (Fed. Cir. 2003). See also MPEP § 804.01.

Applicants have requested reconsideration of the restriction required between Group I and II. This request is persuasive. Here the examiner has reasoned that the "process of treating diseases such as pain can be accomplished with products that materially different from the instant products." The examiner did not provide any particular example of a materially different product. This is counter to MPEP 806.05(h) sets forth the following guidance for distinction between products and process of use:

> The burden is on the examiner to provide an example, but the example need not be documented. If the applicant either proves or provides a convincing argument that the alternative use suggested by the examiner cannot be accomplished, the burden is on the examiner to support a viable alternative use or withdraw the requirement.

The petition argues that the product and processes are not distinct because the process claims of Group II depend from and require the products of Group I. These arguments are persuasive. Process Claims 22-23 all either dependent from or require all the limitations of the product claims. For this reason, the process claims do not encompass use of a product that is materially different from the product of Group I.

Further, Applicants elected the invention of Group I, with traverse and pointed out that the examiner had provide insufficient reasons as to why it distinction had not been established between Group I and Group II. MPEP 821.01 provides the following guidance for the examiner after an election with traverse:

> Where the initial requirement is traversed, it should be reconsidered. If, upon reconsideration, the examiner is still of the opinion that restriction is proper, it should be repeated and made final in the next Office action. (See MPEP § 803.01.) In doing so, the examiner should reply to the reasons or arguments advanced by applicant in the traverse.

In contrast to this guidance, the non-final Office action mailed 7 December 2010 failed to adequately reply to the reasons and arguments advanced by applicants. The examiner simply stated that the traversal was not persuasive for "reasons presented in the Restriction

Requirement." The act of maintained the requirement and making it final without addressing the substance of the traversal was counter to MPEP 821.01.

DECISION

The petition filed under 37 CFR 1.144 on 29 April 2011 is **GRANTED**.

The restriction requirement made between Groups I-II has been withdrawn.

The application will be forwarded to the examiner for consideration of the papers filed on 29 April 2011 and for preparation of an Office action on the merits consistent with this decision.

Should there be any questions regarding this decision, please contact Quality Assurance Specialist Julie Burke, by mail addressed to Director, Technology Center 1600, PO BOX 1450, ALEXANDRIA, VA 22313-1450, or by telephone at (571) 272-0512 or by Official Fax at 703-272-8300.

Remy Yucel
Director, Technology Center 1600

UNITED STATES PATENT AND TRADEMARK OFFICE

UNITED STATES DEPARTMENT OF COMMERCE
United States Patent and Trademark Office
Address: COMMISSIONER FOR PATENTS
P.O. Box 1450
Alexandria, Virginia 22313-1450
www.uspto.gov

APPLICATION NO.	FILING DATE	FIRST NAMED INVENTOR	ATTORNEY DOCKET NO.	CONFIRMATION NO.
12/614,006	11/06/2009	Vacit Arat	P-US233-B-MF	7543

7590 10/12/2011

MICROFABRICA INC.
ATT: DENNIS R. SMALLEY
7911 HASKELL AVENUE
VAN NUYS, CA 91406

EXAMINER	
SHI, KATHERINE	

ART UNIT	PAPER NUMBER
3731	

MAIL DATE	DELIVERY MODE
10/12/2011	PAPER

DECISION GRANTING PETITION UNDER 37 CFR 1.138(d)

The declaration of express abandonment is recognized

This is in response to the petition under 37 CFR 1.138(d), requesting for a refund of any previously paid search fee and excess claims fee in the above-identified application.

The petition is granted.

The express abandonment is recognized. Any previously paid search fee and excess claims fee are hereby refunded.

Telephone inquiries should be directed to the Office of Data Management at (571) 272-4200.

Patent Publication Branch
Office of Data Management

UNITED STATES PATENT AND TRADEMARK OFFICE

Commissioner for Patents
United States Patent and Trademark Office
P.O. Box 1450
Alexandria, VA 22313-1450
www.uspto.gov

SCHWEGMAN, LUNDBERG & WOESSNER, PA
P.O. BOX 2938
MINNEAPOLIS MN 55402

MAILED

AUG 17 2010

OFFICE OF PETITIONS

In re Application of
David J. Grainger, et al.
Application No. 12/614,008
Filed: November 6, 2009
Attorney Docket No. 1543.011US2

DECISION ON PETITION
TO WITHDRAW
FROM RECORD

This is a decision on the Request to Withdraw as attorney or agent of record under 37 C.F.R. § 1.36(b), filed July 15, 2010.

The request is **APPROVED**.

A grantable request to withdraw as attorney/agent of record must be signed by every attorney/agent seeking to withdraw or contain a clear indication that one attorney is signing on behalf of another/others.

The request was signed by Janet E. Embretson on behalf of all attorneys of record who are associated with customer No. 21186. All attorneys/agents associated with the Customer Number 21186 have been withdrawn. Applicant is reminded that there is no attorney of record at this time.

The request to change the correspondence of record is not acceptable as the requested correspondence address is not that of: (1) the first named signing inventor; or (2) an intervening assignee of the entire interest under 37 C.F.R 3.71. All future communications from the Office will be directed to the first named signing inventor at the first copied address below until otherwise properly notified by the applicant.

In order to request or take action in a patent matter, the assignee must establish its ownership of the patent to the satisfaction of the Director. In this regard, a Statement under 37 CFR 3.73(b) must have either: (i) documentary evidence of a chain of title from the original owner to the assignee (*e.g.*, copy of an executed assignment), and a statement affirming that the documentary evidence of the chain of title from the original owner to the assignee was or concurrently is being submitted for recordation pursuant to § 3.11; or (ii) a statement specifying where documentary evidence of a chain of title from the original owner to the assignee is recorded in the assignment records of the Office (*e.g.*, reel and frame number).

There are no pending Office actions at the present time.

Telephone inquiries concerning this decision should be directed to undersigned at 571-272-1642. All other inquiries concerning the examination or status of this application should be directed to the Technology Center.

/AMW/
April M. Wise
Petitions Examiner
Office of Petitions

cc: DAVID J. GRAINGER
9 ST. JOHN'S STREET
DUXFORD, CAMBRIDGE CB2 4RA
UNITEND KINGDOM

cc: CAMBRIDGE ENTERPRISE LIMITED
THE OLD SCHOOLS, TRINITY LANE
CAMBRIDGE CB2 1TS
UNITED KINGDOM

UNITED STATES PATENT AND TRADEMARK OFFICE

UNITED STATES DEPARTMENT OF COMMERCE
United States Patent and Trademark Office
Address: COMMISSIONER FOR PATENTS
P.O. Box 1450
Alexandria, Virginia 22313-1450
www.uspto.gov

APPLICATION NUMBER	FILING OR 371(C) DATE	FIRST NAMED APPLICANT	ATTY. DOCKET NO./TITLE
12/614,008	11/06/2009	David J. Grainger	1543.011US2

CONFIRMATION NO. 7545

POWER OF ATTORNEY NOTICE

21186
SCHWEGMAN, LUNDBERG & WOESSNER, P.A.
P.O. BOX 2938
MINNEAPOLIS, MN 55402

OC000000043059043

Date Mailed: 08/16/2010

NOTICE REGARDING CHANGE OF POWER OF ATTORNEY

This is in response to the Power of Attorney filed 07/15/2010.

- The withdrawal as attorney in this application has been accepted. Future correspondence will be mailed to the new address of record. 37 CFR 1.33.

/amwise/

Office of Data Management, Application Assistance Unit (571) 272-4000, or (571) 272-4200, or 1-888-786-0101

UNITED STATES PATENT AND TRADEMARK OFFICE

Commissioner for Patents
United States Patent and Trademark Office
P.O. Box 1450
Alexandria, VA 22313-1450
www.uspto.gov

Sprinkle IP Law Group
1301 W. 25th Street
Suite 408
Austin, TX 78705

MAILED

FEB 09 2012

OFFICE OF PETITIONS

In re Application of Chen et al. :
Application No. 12/614,016 : Letter
Filing Date: November 6, 2009 :
Attorney Docket No. BAZA1120-1 :

This is a notice regarding the request for acceptance of a fee deficiency submission under 37 CFR 1.28(c) filed January 6, 2012.

The deficiency payment of $85 is hereby accepted.

The change of status to large entity has been entered and made of record.

Telephone inquiries regarding this communication should be directed to Petitions Attorney Steven Brantley at (571) 272-3203.

Charles Steven Brantley
Senior Petitions Attorney
Office of Petitions

UNITED STATES PATENT AND TRADEMARK OFFICE

Commissioner for Patents
United States Patent and Trademark Office
P.O. Box 1450
Alexandria, VA 22313-1450
www.uspto.gov

MAILED

MAR 23 2012

OFFICE OF PETITIONS

MCANDREWS HELD & MALLOY, LTD
500 WEST MADISON STREET
SUITE 3400
CHICAGO, IL 60661

In re Application of Pinguet et al.
Application No. 12/614,024
Filing Date: November 6, 2009
Attorney Docket No. 22721US02

DECISION ON PETITION
UNDER 37 CFR 1.78(a)(3)

This is a decision on the petition under 37 CFR 1.78(a)(3) filed January 30, 2012, to accept an unintentionally delayed claim under 35 U.S.C. § 120 for the benefit of priority to the prior-filed nonprovisional application set forth in the amendment filed with the petition.

The petition is **GRANTED**.

A petition for acceptance of a claim for late priority under 37 CFR 1.78(a)(3) is only applicable to those applications filed on or after November 29, 2000. Further, the petition is appropriate only after the expiration of the period specified in 37 CFR 1.78(a)(2)(ii). In addition, the petition under 37 CFR 1.78(a)(3) must be accompanied by:

(1) the reference required by 35 U.S.C. § 120 and 37 CFR 1.78(a)(2)(i) of the prior-filed application, unless previously submitted;
(2) the surcharge set forth in § 1.17(t); and
(3) a statement that the entire delay between the date the claim was due under 37 CFR 1.78(a)(2)(ii) and the date the claim was filed was unintentional. The Director may require additional information where there is a question whether the delay was unintentional.

All of the above requirements having been satisfied, the late claim for priority under 35 U.S.C. § 120 is accepted as being unintentionally delayed.

The granting of the petition to accept the delayed benefit claim to the prior-filed application under 37 CFR 1.78(a)(3) should not be construed as meaning that this application is entitled to the benefit of the prior-filed application. In order for this application to be entitled to the benefit of the prior-filed application, all other requirements under 35 U.S.C. § 120 and 37 CFR 1.78(a)(1) and (a)(2) must be met. Similarly, the fact that the corrected Filing Receipt accompanying this decision on petition includes the

prior-filed application should not be construed as meaning that applicant is entitled to the claim for benefit of priority to the prior-filed application noted thereon. Accordingly, the examiner will, in due course, consider this benefit claim and determine whether the application is entitled to the benefit of the earlier filing date.

A corrected Filing Receipt, which includes the priority claim to the prior-filed nonprovisional application, accompanies this decision on petition.

The petition fee of $1,410 has been charged to Deposit Account No. 13-0017.

This application is being forwarded to Technology Center Art Unit 2874 for consideration by the examiner of applicant's entitlement to claim benefit of priority under 35 U.S.C. § 120 to the prior-filed application.

Any inquiries concerning this decision may be directed to Senior Petitions Attorney Steven Brantley at (571) 272-3203. All other inquiries concerning either the examination procedures or status of the application should be directed to the Technology Center.

Charles Steven Brantley
Senior Petitions Attorney
Office of Petitions

ATTACHMENT: Corrected Filing Receipt

UNITED STATES PATENT AND TRADEMARK OFFICE

UNITED STATES DEPARTMENT OF COMMERCE
United States Patent and Trademark Office
Address: COMMISSIONER FOR PATENTS
P.O. Box 1450
Alexandria, Virginia 22313-1450
www.uspto.gov

APPLICATION NUMBER	FILING or 371(c) DATE	GRP ART UNIT	FIL FEE REC'D	ATTY.DOCKET.NO	TOT CLAIMS	IND CLAIMS
12/614,024	11/06/2009	2874	462	22721US02	20	2

CONFIRMATION NO. 7579

CORRECTED FILING RECEIPT

23446
MCANDREWS HELD & MALLOY, LTD
500 WEST MADISON STREET
SUITE 3400
CHICAGO, IL 60661

Date Mailed: 03/15/2012

Receipt is acknowledged of this non-provisional patent application. The application will be taken up for examination in due course. Applicant will be notified as to the results of the examination. Any correspondence concerning the application must include the following identification information: the U.S. APPLICATION NUMBER, FILING DATE, NAME OF APPLICANT, and TITLE OF INVENTION. Fees transmitted by check or draft are subject to collection. Please verify the accuracy of the data presented on this receipt. **If an error is noted on this Filing Receipt, please submit a written request for a Filing Receipt Correction. Please provide a copy of this Filing Receipt with the changes noted thereon. If you received a "Notice to File Missing Parts" for this application, please submit any corrections to this Filing Receipt with your reply to the Notice. When the USPTO processes the reply to the Notice, the USPTO will generate another Filing Receipt incorporating the requested corrections**

Applicant(s)

Thierry Pinguet, Cardiff-by-the-Sea, CA;
Attila Mekis, Carlsbad, CA;
Steffen Gloeckner, San Diego, CA;

Power of Attorney: None

Domestic Priority data as claimed by applicant

This appln claims benefit of 61/198,660 11/06/2008
and is a CIP of 12/500,465 07/09/2009

Foreign Applications (You may be eligible to benefit from the **Patent Prosecution Highway** program at the USPTO. Please see http://www.uspto.gov for more information.)

If Required, Foreign Filing License Granted: 11/18/2009

The country code and number of your priority application, to be used for filing abroad under the Paris Convention, is **US 12/614,024**

Projected Publication Date: Not Applicable

Non-Publication Request: No

Early Publication Request: No
**** SMALL ENTITY ****

Title

Method and System For Coupling Optical Signals Into Silicon Optoelectronic Chips

Preliminary Class

385

PROTECTING YOUR INVENTION OUTSIDE THE UNITED STATES

Since the rights granted by a U.S. patent extend only throughout the territory of the United States and have no effect in a foreign country, an inventor who wishes patent protection in another country must apply for a patent in a specific country or in regional patent offices. Applicants may wish to consider the filing of an international application under the Patent Cooperation Treaty (PCT). An international (PCT) application generally has the same effect as a regular national patent application in each PCT-member country. The PCT process **simplifies** the filing of patent applications on the same invention in member countries, but **does not result** in a grant of "an international patent" and does not eliminate the need of applicants to file additional documents and fees in countries where patent protection is desired.

Almost every country has its own patent law, and a person desiring a patent in a particular country must make an application for patent in that country in accordance with its particular laws. Since the laws of many countries differ in various respects from the patent law of the United States, applicants are advised to seek guidance from specific foreign countries to ensure that patent rights are not lost prematurely.

Applicants also are advised that in the case of inventions made in the United States, the Director of the USPTO must issue a license before applicants can apply for a patent in a foreign country. The filing of a U.S. patent application serves as a request for a foreign filing license. The application's filing receipt contains further information and guidance as to the status of applicant's license for foreign filing.

Applicants may wish to consult the USPTO booklet, "General Information Concerning Patents" (specifically, the section entitled "Treaties and Foreign Patents") for more information on timeframes and deadlines for filing foreign patent applications. The guide is available either by contacting the USPTO Contact Center at 800-786-9199, or it can be viewed on the USPTO website at http://www.uspto.gov/web/offices/pac/doc/general/index.html.

For information on preventing theft of your intellectual property (patents, trademarks and copyrights), you may wish to consult the U.S. Government website, http://www.stopfakes.gov. Part of a Department of Commerce initiative, this website includes self-help "toolkits" giving innovators guidance on how to protect intellectual property in specific countries such as China, Korea and Mexico. For questions regarding patent enforcement issues, applicants may call the U.S. Government hotline at 1-866-999-HALT (1-866-999-4158).

LICENSE FOR FOREIGN FILING UNDER

Title 35, United States Code, Section 184

Title 37, Code of Federal Regulations, 5.11 & 5.15

GRANTED

The applicant has been granted a license under 35 U.S.C. 184, if the phrase "IF REQUIRED, FOREIGN FILING LICENSE GRANTED" followed by a date appears on this form. Such licenses are issued in all applications where the conditions for issuance of a license have been met, regardless of whether or not a license may be required as

set forth in 37 CFR 5.15. The scope and limitations of this license are set forth in 37 CFR 5.15(a) unless an earlier license has been issued under 37 CFR 5.15(b). The license is subject to revocation upon written notification. The date indicated is the effective date of the license, unless an earlier license of similar scope has been granted under 37 CFR 5.13 or 5.14.

This license is to be retained by the licensee and may be used at any time on or after the effective date thereof unless it is revoked. This license is automatically transferred to any related applications(s) filed under 37 CFR 1.53(d). This license is not retroactive.

The grant of a license does not in any way lessen the responsibility of a licensee for the security of the subject matter as imposed by any Government contract or the provisions of existing laws relating to espionage and the national security or the export of technical data. Licensees should apprise themselves of current regulations especially with respect to certain countries, of other agencies, particularly the Office of Defense Trade Controls, Department of State (with respect to Arms, Munitions and Implements of War (22 CFR 121-128)); the Bureau of Industry and Security, Department of Commerce (15 CFR parts 730-774); the Office of Foreign AssetsControl, Department of Treasury (31 CFR Parts 500+) and the Department of Energy.

NOT GRANTED

No license under 35 U.S.C. 184 has been granted at this time, if the phrase "IF REQUIRED, FOREIGN FILING LICENSE GRANTED" DOES NOT appear on this form. Applicant may still petition for a license under 37 CFR 5.12, if a license is desired before the expiration of 6 months from the filing date of the application. If 6 months has lapsed from the filing date of this application and the licensee has not received any indication of a secrecy order under 35 U.S.C. 181, the licensee may foreign file the application pursuant to 37 CFR 5.15(b).

SelectUSA

The United States represents the largest, most dynamic marketplace in the world and is an unparalleled location for business investment, innovation and commercialization of new technologies. The USA offers tremendous resources and advantages for those who invest and manufacture goods here. Through SelectUSA, our nation works to encourage, facilitate, and accelerate business investment. To learn more about why the USA is the best country in the world to develop technology, manufacture products, and grow your business, visit SelectUSA.gov.

Doc Code: PPH.PCT.652
Document Description: Petition to make special under PCT-Patent Pros Hwy

PTO/SB/20PCT-KR (06-10)
Approved for use through 01/31/2012. OMB 0651-0058
U.S. Patent and Trademark Office; U. S. DEPARTMENT OF COMMERCE
Under the Paperwork Reduction Act of 1995, no persons are required to respond to a collection of information unless it displays a valid OMB control number.

REQUEST FOR PARTICIPATION IN THE PATENT COOPERATION TREATY - PATENT PROSECUTION HIGHWAY (PCT-PPH) PILOT PROGRAM BETWEEN THE KOREAN INTELLECTUAL PROPERTY OFFICE (KIPO) AND THE USPTO

Application No:	12/614,042	Filing date:	11-06-2009
First Named Inventor:	Dan Bryce		
Title of the Invention:	DIE STRUCTURE		

THIS REQUEST FOR PARTICIPATION IN THE PCT-PPH PILOT PROGRAM ALONG WITH THE REQUIRED DOCUMENTS MUST BE SUBMITTED VIA EFS-WEB. INFORMATION REGARDING EFS-WEB IS AVAILABLE AT HTTP://WWW.USPTO.GOV/EBC/EFS_HELP.HTML

APPLICANT HEREBY REQUESTS PARTICIPATION IN THE PCT-PPH PROGRAM AND PETITIONS TO MAKE THE ABOVE-IDENTIFIED APPLICATION SPECIAL UNDER THE PCT-PPH PROGRAM.

The above-identified application is (1) a national stage entry of the corresponding PCT application, or (2) a national stage entry of another PCT application which claims priority to the corresponding PCT application, or (3) a national application that claims domestic/ foreign priority to the corresponding PCT application, or (4) a national application which forms the basis for the priority claim in the corresponding PCT application, or (5) a continuing application of a U.S. application that satisfies one of (1) to (4) above, or (6) a U.S. application that claims domestic benefit to a U.S. provisional application which forms the basis for the priority claim in the corresponding PCT application.

The corresponding PCT application number(s) is/are: PCT/US2010/053365

The international filing date of the corresponding PCT application(s) is/are: October 20, 2010

I. List of Required Documents:

a. **A copy of the latest international work product (WO/ISA, WO/IPEA, or IPER) in the above–identified corresponding PCT application(s)**

☑ Is attached.

☐ Is not attached because the document is already in the U.S. application.

b. **A copy of all claims which were indicated as having novelty, inventive step and industrial applicability in the above-identified corresponding PCT application(s).**

☑ Is attached.

☐ Is not attached because the document is already in the U.S. application.

c. **English translations of the documents in a. and b. above are attached (if the documents are not in the English language). A statement that the English translation is accurate is attached for the document in b. above.**

This collection of information is required by 35 U.S.C. 119, 37 CFR 1.55, and 37 CFR 1.102(d). The information is required to obtain or retain a benefit by the public, which is to file (and by the USPTO to process) an application. Confidentiality is governed by 35 U.S.C. 122 and 37 CFR 1.11 and 1.14. This collection is estimated to take 2 hours to complete, including gathering, preparing, and submitting the completed application form to the USPTO. Time will vary depending upon the individual case. Any comments on the amount of time you require to complete this form and/or suggestions for reducing this burden should be sent to the Chief Information Officer, U.S. Patent and Trademark Office, U.S. Department of Commerce, P.O. Box 1450, Alexandria, VA 22313-1450. DO NOT SEND FEES OR COMPLETED FORMS TO THIS ADDRESS.

REQUEST FOR PARTICIPATION IN THE PCT-PPH PILOT PROGRAM BETWEEN THE KIPO AND THE USPTO

(continued)

Application No.:	
First Named Inventor:	

d. **(1) An information disclosure statement listing the documents cited in the international work products (ISR, WO/ISA, WO/IPEA, IPER) of the corresponding PCT application.**

☑ Is attached

☐ Has already been filed in the above-identified U.S. application on _____

(2) Copies of all documents (except) for U.S. patents or U.S. patent application publications)

☑ Are attached.

☐ Have already been filed in the above-identified U.S. application on _____

II. Claims Correspondence Table:

Claims in US Application	Patentable Claims in the corresponding PCT Application	Explanation regarding the correspondence
1-15	1-15	identical claims in the US and PCT Applications

III. All the claims in the US application sufficiently correspond to the patentable claims in the corresponding PCT application.

Signature	Date 07.06.2011
Name (Print/Typed) ADAM K SACHAROFF	Registration Number 43075

Privacy Act Statement

The **Privacy Act of 1974 (P.L. 93-579)** requires that you be given certain information in connection with your submission of the attached form related to a patent application or patent. Accordingly, pursuant to the requirements of the Act, please be advised that: (1) the general authority for the collection of this information is 35 U.S.C. 2(b)(2); (2) furnishing of the information solicited is voluntary; and (3) the principal purpose for which the information is used by the U.S. Patent and Trademark Office is to process and/or examine your submission related to a patent application or patent. If you do not furnish the requested information, the U.S. Patent and Trademark Office may not be able to process and/or examine your submission, which may result in termination of proceedings or abandonment of the application or expiration of the patent.

The information provided by you in this form will be subject to the following routine uses:

1. The information on this form will be treated confidentially to the extent allowed under the Freedom of Information Act (5 U.S.C. 552) and the Privacy Act (5 U.S.C 552a). Records from this system of records may be disclosed to the Department of Justice to determine whether disclosure of these records is required by the Freedom of Information Act.
2. A record from this system of records may be disclosed, as a routine use, in the course of presenting evidence to a court, magistrate, or administrative tribunal, including disclosures to opposing counsel in the course of settlement negotiations.
3. A record in this system of records may be disclosed, as a routine use, to a Member of Congress submitting a request involving an individual, to whom the record pertains, when the individual has requested assistance from the Member with respect to the subject matter of the record.
4. A record in this system of records may be disclosed, as a routine use, to a contractor of the Agency having need for the information in order to perform a contract. Recipients of information shall be required to comply with the requirements of the Privacy Act of 1974, as amended, pursuant to 5 U.S.C. 552a(m).
5. A record related to an International Application filed under the Patent Cooperation Treaty in this system of records may be disclosed, as a routine use, to the International Bureau of the World Intellectual Property Organization, pursuant to the Patent Cooperation Treaty.
6. A record in this system of records may be disclosed, as a routine use, to another federal agency for purposes of National Security review (35 U.S.C. 181) and for review pursuant to the Atomic Energy Act (42 U.S.C. 218(c)).
7. A record from this system of records may be disclosed, as a routine use, to the Administrator, General Services, or his/her designee, during an inspection of records conducted by GSA as part of that agency's responsibility to recommend improvements in records management practices and programs, under authority of 44 U.S.C. 2904 and 2906. Such disclosure shall be made in accordance with the GSA regulations governing inspection of records for this purpose, and any other relevant (*i.e.*, GSA or Commerce) directive. Such disclosure shall not be used to make determinations about individuals.
8. A record from this system of records may be disclosed, as a routine use, to the public after either publication of the application pursuant to 35 U.S.C. 122(b) or issuance of a patent pursuant to 35 U.S.C. 151. Further, a record may be disclosed, subject to the limitations of 37 CFR 1.14, as a routine use, to the public if the record was filed in an application which became abandoned or in which the proceedings were terminated and which application is referenced by either a published application, an application open to public inspection or an issued patent.
9. A record from this system of records may be disclosed, as a routine use, to a Federal, State, or local law enforcement agency, if the USPTO becomes aware of a violation or potential violation of law or regulation.

We Claim:

1. A die structure for a child's game or the like comprising:

a housing having first and second housing structures defined to secure to each other to form a plurality of sides, including a front side, a rear side and at least one intermediate side connected between the front and rear sides, the first housing structure including a peg extending inwardly towards an internal region of the housing;

an internal wheel having an aperture for receiving the peg such that the internal wheel is rotatably secured to the first housing structure, the internal wheel further having a perimeter edge, the perimeter edge further defined with a plurality of spaced apart curved grooves positioned on the periphery thereof, and wherein a portion of the perimeter edge being accessible through the first housing structure; and

a plurality of labels having indicia printed thereon and separately affixed to the plurality of sides of the housing, wherein one of the plurality of labels being defined as an internal wheel label affixed to a side of the internal wheel defined to face the first hosing structure, such that the indicia printed on the internal wheel label is visible through a window defined on the first housing structure.

2. The die structure of Claim 1 further comprising a latch with a locking member secured within the housing, the latch being biased such that when the internal wheel rotates, the locking member slides into and out of engagement with the curved grooves, wherein when the locking member is engaging a curved groove, the internal wheel maintains its position.

3. The die structure of Claim 1 further comprising an internal ballast ball enclosed within the housing and capable of freely moving within the housing.

4. The die structure of Claim 1, wherein the first housing structure further includes a curved notch portion to permit access to the perimeter edge of the internal wheel.

5. The die structure of Claim 1, wherein the intermediate side further has defined a plurality of angled sections, each angled section defining a pair of adjacent side faces, such that the housing defines at least one of the following shapes, a hexagon, octagon, or decagon.

6. A die structure for a child's game or the like comprising:

a housing having first and second housing structures defined to secure to each other to form a plurality of sides, including a front side, a rear side and at least one intermediate side connected between the front and rear sides, the first housing structure including a peg extending inwardly towards an internal region of the housing;

an internal wheel having an aperture for receiving the peg such that the internal wheel is rotatably secured to the first housing structure, the internal wheel further having a perimeter edge, the perimeter edge further defined with a plurality of spaced apart curved grooves positioned on the periphery thereof, and wherein a portion of the perimeter edge being accessible through the first housing structure;

and the first housing structure further including a curved notch portion to permit access to the perimeter edge of the internal wheel;

a latch with a locking member secured within the housing, the latch being biased such that when the internal wheel rotates, the locking member slides into and out of engagement with the curved grooves, wherein when the locking member is engaging a curved groove, the internal wheel maintains its position;

an internal ballast ball enclosed within the housing and capable of freely moving within the housing; and

a plurality of labels having indicia printed thereon and separately affixed to the plurality of sides of the housing, wherein one of the plurality of labels being defined as an internal wheel label affixed to a side of the internal wheel defined to face the first hosing structure, such that the indicia printed on the internal wheel label is visible through a window defined on the first housing structure.

8. The die structure of Claim 6, wherein the intermediate side further has defined a plurality of angled sections, each angled section defining a pair of adjacent side faces, such that the housing defines at least one of the following shapes, a hexagon, octagon, or decagon.

9. A die structure for a child's game or the like comprising:

a housing having first and second housing structures defined to secure to each other to form a plurality of sides, including a front side, a rear side and at least one intermediate side connected between the front and rear sides;

an external face being rotatably secured to the front side of the housing; and

a plurality of labels having indicia printed thereon and separately affixed to the plurality of sides of the housing, wherein one of the plurality of labels being defined as an external label affixed to the front side of the housing intermediate of the front side and the external face, such that the indicia printed on the external label is visible through a window defined on the external face.

10. The die structure of Claim 9, wherein the intermediate side further has defined a plurality of angled sections, each angled section defining a pair of adjacent side faces, such that the housing defines at least one of the following shapes, a hexagon, octagon, or decagon.

11. The die structure of Claim 9 further comprising an internal ballast ball enclosed within the housing and capable of freely moving within the housing.

12. The die structure of Claim 11 wherein the front side of the housing has an opening sized to permit the passage of the ballast ball and the window on the external face is similarly sized to the opening, such that when the external face is rotated to align the opening and the window the ballast ball is capable of being removed from the die structure.

13. The die structure of Claim 12, wherein the external face includes a central peg extending towards and through a central opening defined on the housing and the peg is secured to a gear positioned within the housing to capture the external rotating face against the front side of the

housing, the gear having a plurality of notches sized to receive the end of a latch to permit rotation of the external face to various positions.

14. The die structure of Claim 9, wherein the external face has a shape sized to fit within a recessed section defined by the front side of the housing.

15. The die structure of Claim 14, wherein the external face includes a plurality of protruding or recessed knobs positioned on the external face.

UNITED STATES PATENT AND TRADEMARK OFFICE

UNITED STATES DEPARTMENT OF COMMERCE
United States Patent and Trademark Office
Address: COMMISSIONER FOR PATENTS
P.O. Box 1450
Alexandria, Virginia 22313-1450
www.uspto.gov

APPLICATION NO.	FILING DATE	FIRST NAMED INVENTOR	ATTORNEY DOCKET NO.	CONFIRMATION NO.
12/614,042	11/06/2009	Dan Bryce	0007387.0004	7618

34755 7590 07/14/2011

ADAM K. SACHAROFF
MUCH SHELIST DENENBERG AMENT & RUBENSTEIN
191 N. WACKER DRIVE, Suite 1800
CHICAGO, IL 60606-1615

EXAMINER	
LAYNO, BENJAMIN	
ART UNIT	PAPER NUMBER
3711	

NOTIFICATION DATE	DELIVERY MODE
07/14/2011	ELECTRONIC

Please find below and/or attached an Office communication concerning this application or proceeding.

The time period for reply, if any, is set in the attached communication.

Notice of the Office communication was sent electronically on above-indicated "Notification Date" to the following e-mail address(es):

ipdocket@muchshelist.com

UNITED STATES PATENT AND TRADEMARK OFFICE

Commissioner for Patents
United States Patent and Trademark Office
P.O. Box 1450
Alexandria, VA 22313-1450
www.uspto.gov

ADAM K. SACHAROFF
MUCH SHELIST DENENBERG AMENT & RUBENSTEIN
191 N. WACKER DRIVE, Suite 1800
CHICAGO IL 60606-1615

In re Application of:	: DECISION ON A REQUEST TO
BRYCE, DAN	: PARTICIPATE IN PCT/PATENT
Serial No.: 12/614042	: PROSECUTION HIGHWAY
Filed: November 6, 2009	: PROGRAM AND PETITION
Attorney Docket No. : 0007387.0004	: TO MAKE SPECIAL UNDER
Title: DIE STRUCTURE	: CFR 1.102(a)

This is a decision on the request to participate in the Patent Prosecution Highway (PPH) program and the petition under 37 CFR 1.102(a), filed July 6, 2011 to make the above-identified application special.

The request and petition are **granted.**

A grantable request to participate in the PPH pilot program and petition to make special require:

(1) The U.S. application must validly claim priority under 35 U.S.C. 119(a) to one or more PCT applications filed in the JPO, EPO, KIPO, or USPTO;
(2) Applicant must submit a copy of the allowable/patentable claim(s) from the PCT application(s) latest international work product (the written opinion or the IPER) along with an English translation thereof and a statement that the English translation is accurate;
(3) All the claims in the U.S. application must sufficiently correspond or be amended to sufficiently correspond to the allowable/patentable claim(s) in the PCT application(s);
(4) Examination of the U.S. application has not begun;
(5) Applicant must submit a copy of the latest international work product from the PCT application containing the allowable/patentable claim(s) along with an English translation thereof and a statement that the English translation is accurate; and
(6) Applicant must submit an IDS listing the documents cited by the PCT examiner in the international work product along with copies of documents except U.S. patents or U.S. patent application publications.

In light of the petition being properly submitted, the request to participate in the PPH program and the petition comply with the above requirements. Accordingly, the above-identified application has been accorded "special" status.

The applicant is encouraged to cite and submit all relevant prior art references, if any, to facilitate examination in this application.

Response must be filed via EFS-Web. Telephone inquiries concerning this decision should be directed to Henry C. Yuen, at 571-272-4856.

Petition is **granted**.

/Henry C. Yuen/

Henry C. Yuen
Special Programs Examiner
Technology Center 3700
Tel: 571-272-4856

UNITED STATES PATENT AND TRADEMARK OFFICE

Commissioner for Patents
United States Patent and Trademark Office
P.O. Box 1450
Alexandria, VA 22313-1450
www.uspto.gov

In re Application of
Alfred Y. Wong

Application No. 12614132

Filed: November 6,2009

Attorney Docket No. 8986.004.NPUS

:DECISION ON PETITION TO MAKE SPECIAL
:UNDER 37 CFR 1.102(c)(1)

This is a decision on the electronic petition under 37 CFR 1.102 (c)(1), filed 06-JUN-2011 to make the above-identified application special based on applicant's age as set forth in MPEP § 708.02, Section IV.

The petition is **GRANTED**.

A grantable petition to make an application special under 37 CFR 1.102(c)(1), MPEP § 708.02, Section IV: Applicant's Age must include a statement by applicant or a registered practitioner having evidence that applicant is at least 65 years of age. No fee is required.

Accordingly, the above-identified application has been accorded "special" status and will be taken up for action by the examiner upon the completion of all pre-examination processing.

Telephone inquiries concerning this electronic decision should be directed to the Electronic Business Center at 866-217-9197.

All other inquiries concerning either the examination or status of the application should be directed to the Technology Center.

Doc code : PET.OP.AGE
Description : Petition to make special based on Age/Health

PTO/SB/130 (07-09)
Approved for use through 07/31/2012. OMB 0651- 0031
U.S. Patent and Trademark Office; U.S. DEPARTMENT OF COMMERCE
Under the Paperwork Reduction Act of 1995, no persons are required to respond to a collection of information unless it contains a valid OMB control number

PETITION TO MAKE SPECIAL BASED ON AGE FOR ADVANCEMENT OF EXAMINATION UNDER 37 CFR 1.102(c)(1)

Application Information

Application Number	12614132	Confirmation Number	7846	Filing Date	2009-11-06
Attorney Docket Number (optional)	8986.004.NPUS	Art Unit	2617	Examiner	N Maung
First Named Inventor	Alfred Y. Wong				
Title of Invention	Radiation Redirecting External Case For Portable Communication Device and Antenna Embedded In Battery of Portable Communication Device				

Attention: Office of Petitions
An application may be made special for advancement of examination upon filing of a petition showing that the applicant is 65 years of age, or more. No fee is required with such a petition. See 37 CFR 1.102(c)(1) and MPEP 708.02 (IV).

APPLICANT HEREBY PETITIONS TO MAKE SPECIAL FOR ADVANCEMENT OF EXAMINATION IN THIS APPLICATION UNDER 37 CFR 1.102(c)(1) and MPEP 708.02 (IV) ON THE BASIS OF THE APPLICANT'S AGE.

A grantable petition requires one of the following items:
(1) Statement by one named inventor in the application that he/she is 65 years of age, or more; or
(2) Certification by a registered attorney/agent having evidence such as a birth certificate, passport, driver's license, etc. showing one named inventor in the application is 65 years of age, or more.

Name of Inventor who is 65 years of age, or older

Given Name	Middle Name	Family Name	Suffix
Alfred	Y.	Wong	

A signature of the applicant or representative is required in accordance with 37 CFR 1.33 and 10.18.
Please see 37 CFR 1.4(d) for the format of the signature.

Select (1) or (2) :

○ (1) I am an inventor in this application and I am 65 years of age, or more.

● (2) I am an attorney or agent registered to practice before the Patent and Trademark Office, and I certify that I am in possession of evidence, and will retain such in the application file record, showing that the inventor listed above is 65 years of age, or more.

Signature	/Vincent M DeLuca/	Date (YYYY-MM-DD)	2011-06-06
Name	Vincent M DeLuca	Registration Number	32408

PTO/SB/130 (07-09)
Approved for use through 07/31/2012. OMB 0651- 0031
U.S. Patent and Trademark Office; U.S. DEPARTMENT OF COMMERCE
Under the Paperwork Reduction Act of 1995, no persons are required to respond to a collection of information unless it contains a valid OMB control number

Privacy Act Statement

The Privacy Act of 1974 (P.L. 93-579) requires that you be given certain information in connection with your submission of the attached form related to a patent application or patent. Accordingly, pursuant to the requirements of the Act, please be advised that: (1) the general authority for the collection of this information is 35 U.S.C. 2(b)(2); (2) furnishing of the information solicited is voluntary; and (3) the principal purpose for which the information is used by the U.S. Patent and Trademark Office is to process and/or examine your submission related to a patent application or patent. If you do not furnish the requested information, the U.S. Patent and Trademark Office may not be able to process and/or examine your submission, which may result in termination of proceedings or abandonment of the application or expiration of the patent.

The information provided by you in this form will be subject to the following routine uses:

1. The information on this form will be treated confidentially to the extent allowed under the Freedom of Information Act (5 U.S.C. 552) and the Privacy Act (5 U.S.C. 552a). Records from this system of records may be disclosed to the Department of Justice to determine whether the Fr eedom of Information Act requires disclosure of these records.

2. A record from this system of records may be disclosed, as a routine use, in the course of presenting evidence to a court, magistrate, or administrative tribunal, including disclosures to opposing counsel in the course of settlement negotiations.

3. A record in this system of records may be disclosed, as a routine use, to a Member of Congress submitting a request involving an individual, to whom the record pertains, when the individual has requested assistance from the Member with respect to the subject matter of the record.

4. A record in this system of records may be disclosed, as a routine use, to a contractor of the Agency having need for the information in order to perform a contract. Recipients of information shall be required to comply with the requirements of the Privacy Act of 1974, as amended, pursuant to 5 U.S.C. 552a(m).

5. A record related to an International Application filed under the Patent Cooperation Treaty in this system of records may be disclosed, as a routine use, to the International Bureau of the World Intellectual Property Organization, pursuant to the Patent Cooperation Treaty.

6. A record in this system of records may be disclosed, as a routine use, to another federal agency for purposes of National Security review (35 U.S.C. 181) and for review pursuant to the Atomic Energy Act (42 U.S.C. 218(c)).

7. A record from this system of records may be disclosed, as a routine use, to the Administrator, General Services, or his/her designee, during an inspection of records conducted by GSA as part of that agency's responsibility to recommend improvements in records management practices and programs, under authority of 44 U.S.C. 2904 and 2906. Such disclosure shall be made in accordance with the GSA regulations governing inspection of records for this purpose, and any other relevant (i.e., GSA or Commerce) directive. Such disclosure shall not be used to make determinations about indivi duals.

8. A record from this system of records may be disclosed, as a routine use, to the public after either publication of the application pursuant to 35 U.S.C. 122(b) or issuance of a patent pursuant to 35 U.S.C. 151. Further, a record may be disclosed, subject to the limitations of 37 CFR 1.14, as a routine use, to the public if the record was filed in an application which became abandoned or in which the proceedings were terminated and which application is referenced by either a published application, an application open to public inspections or an issued patent.

9. A record from this system of records may be disclosed, as a routine use, to a Federal, State, or local law enforcement agency, if the USPTO becomes aware of a violation or potential violation of law or regulation.

UNITED STATES PATENT AND TRADEMARK OFFICE

Commissioner for Patents
United States Patent and Trademark Office
P.O. Box 1450
Alexandria, VA 22313-1450
www.uspto.gov

STERNE, KESSLER, GOLDSTEIN & FOX P.L.L.C.
1100 NEW YORK AVENUE, N.W.
WASHINGTON, DC 20005

MAILED
JUL 07 2011
OFFICE OF PETITIONS

Applicant: Kochidomari, et al.
Appl. No.: 12/614,147
Filing Date: November 6, 2009
Title: POWER UNITY AND VEHICLE EQUIPPED WITH IT
Attorney Docket No.: 0666.4170000/TGD/JHH
Pub. No.: US 2010/0263958 A1
Pub. Date: October 21, 2010

This is a decision on the request for a "Corrected Notice of Publication", which is also being treated as a request for a corrected patent application publication under 37 CFR 1.221(b), received on November 18, 2010, for the above-identified application.

The request is DISMISSED.

Applicant requests that the Office issue a corrected Notice of Publication correcting the typographical error wherein the name of one of the inventor's "Nicholas Biersdorf" was misprinted as "Nicholas Biersforf".

37 CFR 1.221 (b) is applicable "only when the Office makes a material mistake which is apparent from Office records.... Any request for a corrected publication or revised patent application publication other than provided as provided in paragraph (a) of this section must be filed within two months from the date of the patent application publication. This period is not extendable." A material mistake must affect the public's ability to appreciate the technical disclosure of the patent application publication, to determine the scope of the patent application publication, or to determine the scope of the provisional rights that an applicant may seek to enforce upon issuance of a patent. [1]

The error on the Notice of Publication wherein the spelling of one of the inventor's last name "Biersforf" is misspelled as "Biersdorf" may be an Office error, but the rules do not provide for a "Corrected Notice of Publication". Mr. Biersdorf's name does not appear on the Notice of Publication.

The error on the front page of the publication wherein the spelling of one of the inventor's last name "Biersforf" is misspelled as "Biersdorf" may be an Office error, but is not a material Office error under 37 CFR 1.221(b). The typographical error of the inventor's name does not affect the

[1] Changes to Implement Eighteen-Month Publication of Patent Applications, 65 FR 57023, 57038 (Sept. 20, 2000), 1239, Off. Gaz. Pat. Office Notices 63, 75 (Oct. 10, 2000) (final rule).

understanding of the application. The mistake does not affect the public's ability to appreciate the technical disclosure of the patent application publication, or determine the scope of the patent application publication or determine the scope of the provisional rights that an applicant may seek to enforce upon issuance of a patent.

Applicants are encouraged to use and submit an **eADS** (PTO/SB/14) as an EFS-Web Fillable Form, rather than a scanned PDF image, to benefit from having the data loaded directly into USPTO electronic systems. For questions contact the Patent EBC (Electronic Business Center):
Telephone: 1-866-217-9197 (toll-free) or E-mail: ebc@uspto.gov
571-272-4100 (local)

The applicant is advised that a "request for republication of an application previously published" may be filed under 37 CFR 1.221(a). Such a request for republication "must include a copy of the application compliance with the Office's electronic filing system requirements and be accompanied by the publication fee set forth in § 1.18(d) and the processing fee set forth in § 1.17(i)." If the request for republication does not comply with the electronic filing system requirements, the republication will not take place and the publication fee set forth in § 1.18(d) will be refunded. The processing fee will be retained.

A guide for filing a request for a Pre-Grant Publication, such as a request for republication, may be found on the link below:

http://www.uspto.gov/patents/process/file/efs/guidance/index.jsp
OR
http://www.uspto.gov/ebc/portal/efs/pgpub_quickstart.pdf

Any request for republication under 37 CFR 1.221(a), must be submitted via the EFS system, as a "Pre-Grant Publication" and questions or request for reconsideration of the decision, should be addressed as follows:

By mail to: Mail Stop PGPUB
Commissioner for Patents
P.O. Box 1450
Alexandria, Va. 22313-1450

Inquiries relating to this matter may be directed to Mark Polutta at (571) 272-7709.

Mark Polutta
Senior Legal Advisor
Office of Patent Legal Administration
Office of the Deputy Commissioner
for Patent Examination Policy

Doc Code: PET.GREEN
Document Description: Petition for Green Tech Pilot

PTO/SB/420 (05-10)
Approved for use through 01/31/2011. OMB 0651-0062
U.S. Patent and Trademark Office; U.S. DEPARTMENT OF COMMERCE
Under the Paperwork Reduction Act of 1995, no persons are required to respond to a collection of information unless it displays a valid OMB control number.

PETITION TO MAKE SPECIAL UNDER THE GREEN TECHNOLOGY PILOT PROGRAM

Attorney Docket Number: 913RO-000610US	Application Number (if known): 12/614,169	Filing date: November 6, 2009

First Named Inventor: Fabio Albano

Title: A METHOD FOR MANUFACTURE AND STRUCTURE OF MULTIPLE ELECTROCHEMISTRIES AND ENERGY GATHERING COMPONENTS WITHIN A UNIFIED STRUCTURE

APPLICANT HEREBY REQUESTS TO PARTICIPATE IN THE GREEN TECHNOLOGY PILOT PROGRAM FOR THE ABOVE-IDENTIFIED APPLICATION. See Instruction Sheet on page 2.

This petition must be timely filed electronically using the USPTO electronic filing system, EFS-Web.

1. ~~By filing this petition:~~

   ~~Applicant is requesting early publication; Applicant hereby requests early publication under 37 CFR 1.219 and the publication fee set forth in 37 CFR 1.18(d) accompanies this request.~~

2. By filing this petition: applicant is agreeing to make an election without traverse in a telephonic interview and elect an invention that meets the eligibility requirements set forth in the notice titled "Pilot Program for Green Technologies Including Greenhouse Gas Reduction," as modified by the notice titled "Elimination of Classification Requirement in the Green Technology Pilot Program," each of which was published in the Federal Register, if the Office determines that the claims are not obviously directed to a single invention.

3. This request is accompanied by statements of special status for the eligibility requirement.

4. The application contains no more than three (3) independent claims and twenty (20) total claims.

5. The application does not contain any multiple dependent claims.

6. Other attachments: See Attached Petition

Signature /Richard T. Ogawa/	Date 09/27/2010
Name (Print/Typed): Richard T. Ogawa	Registration Number 37,692

Note: *Signatures of all the inventors or assignees of record of the entire interest or their representative(s) are required in accordance with 37 CFR 1.33 and 11.18. Please see 37 CFR 1.4(d) for the form of the signature. If necessary, submit multiple forms for more than one signature, see below*.*

☐ *Total of _____ forms are submitted.

The information is required to obtain or retain a benefit by the public which is to file (and by the USPTO to process) an application. Confidentiality is governed by 35 U.S.C. 122 and 37 CFR 1.11 and 1.14. This collection is estimated to take 1 hour to complete, including gathering, preparing, and submitting the completed application form to the USPTO. Time will vary depending upon the individual case. Any comments on the amount of time you require to complete this form and/or suggestions for reducing this burden, should be sent to the Chief Information Officer, U.S. Patent and Trademark Office, U.S. Department of Commerce, P.O. Box 1450, Alexandria, VA 22313-1450. DO NOT SEND FEES OR COMPLETED FORMS TO THIS ADDRESS. **SEND TO: Commissioner for Patents, P.O. Box 1450, Alexandria, VA 22313-1450.**

If you need assistance in completing the form, call 1-800-PTO-9199 and select option 2.

PATENT
Attorney Docket No.: 913RO-000610US

I hereby certify that this correspondence is being filed Via EFS-Web with the USPTO on September 27, 2010.

By: Richard T. Ogawa

IN THE UNITED STATES PATENT AND TRADEMARK OFFICE

In re application of:	Attorney Docket No.: 913RO-000610US
Fabio Albano, et al.	Confirmation No. 7932
Application No.: 12/614,169	Examiner: SCHIRO, RYAN RAYMOND
Filed: November 6, 2009	Technology Center/Art Unit: 1711
For: A METHOD FOR MANUFACTURE AND STRUCTURE OF MULTIPLE ELECTROCHEMISTRIES AND ENERGY GATHERING COMPONENTS WITHIN A UNIFIED STRUCTURE	Petition to Make Special Under The Green Technology Pilot Program
Customer No.: 83275	Date: September 27, 2010

Commissioner for Patents
P.O. Box 1450
Alexandria, VA 22313-1450

Dear Sir:

Applicant hereby requests to participate in the Green Technology Pilot Program for the above identified application.

STATEMENTS OF SPECIAL STATUS FOR THE ELIGIBILITY REQUIREMENT

The application is a non-reissue, non-provisional utility application filed under 35 USC 111(a), filed before Dec. 8, 2009.

The application contains, after a preliminary amendment submitted herewith, no more than three independent claims and twenty or fewer total claims, and no multiple dependent claims as well.

By filing this petition:
Since this application was already published on June 3, 2010 (Publication No. US 2010-0136245 A1), it is believed that there is no need to request early publication under 37 CFR 1.219. However, the publication fee $300 set forth in CFR 1.18(d) accompanies this petition request.

Applicant believes the pending claims in the application being directed to a single invention that materially contributes to the discovery or development of renewable energy resources. The claimed invention provides an advanced method for designing and manufacturing a thin-film device with unified structure, applicable for a variety of applications including electrochemical cells, photovoltaic cells, fuel-cells, capacitors, ultracapacitors, thermoelectric, piezoelectric, microelectromechanical turbines, or energy scavengers.

By filing this petition: applicant hereby agrees to make an election without traverse in a telephonic interview and elect an invention that meets the eligibility requirements set forth in the notice titled "Pilot Program for Green Technologies Including Greenhouse Gas Reduction," as modified by the notice titled "Elimination of Classification Requirement in the Green Technology Pilot Program," each of which was published in the Federal Register, if the Office determines that the claims are not obviously directed to a single invention.

REMARKS

A preliminary amendment has been submitted herewith to reduce number of claims to have no more than three (3) independent claims and twenty (20) total claims.

The application does not contain any multiple dependent claims.

If the Office believes a telephone conference would expedite prosecution of this application, please telephone the undersigned at 650-906-0323.

Respectfully submitted,

/Richard T. Ogawa/

Richard T. Ogawa
Reg. No. 37,692

UNITED STATES PATENT AND TRADEMARK OFFICE

UNITED STATES DEPARTMENT OF COMMERCE
United States Patent and Trademark Office
Address: COMMISSIONER FOR PATENTS
P.O. Box 1450
Alexandria, Virginia 22313-1450
www.uspto.gov

APPLICATION NO.	FILING DATE	FIRST NAMED INVENTOR	ATTORNEY DOCKET NO.	CONFIRMATION NO.
12/614,169	11/06/2009	Fabio Albano	913RO-000610US	7932

83275 7590 10/04/2010

AMPACC Law Group
3500 188th Street SW, Suite103
Lynnwood, WA 98037

EXAMINER	
SCHIRO, RYAN RAYMOND	
ART UNIT	PAPER NUMBER
1711	

NOTIFICATION DATE	DELIVERY MODE
10/04/2010	ELECTRONIC

Please find below and/or attached an Office communication concerning this application or proceeding.

The time period for reply, if any, is set in the attached communication.

Notice of the Office communication was sent electronically on above-indicated "Notification Date" to the following e-mail address(es):

DOCKETING @AMPACC.COM

UNITED STATES PATENT AND TRADEMARK OFFICE

Commissioner for Patents
United States Patent and Trademark Office
P.O. Box 1450
Alexandria, VA 22313-1450
www.uspto.gov

AMPACC Law Group
3500 188th Street SW, Suite103
Lynnwood WA 98037

OCT 0 4 2010

In re Application of	:	
Albano et al.	:	DECISION ON PETITION
Application No. 12/614,169	:	TO MAKE SPECIAL UNDER
Filed: 11/6/2009	:	THE GREEN TECHNOLOGY
Attorney Docket No. **913RO-000610US**	:	PILOT PROGRAM

This is a decision on the petition under 37 CFR 1.102, filed 9/27/2010, to make the above-identified application special under the pilot program for applications pertaining to Green Technologies as set forth 74 Federal Register Notice 64666 (December 8, 2009).

The petition is **GRANTED**.

A grantable petition to make an application special under 37 CFR 1.102 and the pilot program as set forth in 74 FR 64666 must be directed to a nonprovisional application filed under 35 USC 111(a) or be a national stage entry under 35 USC 371, exclusive of any reissue applications and be filed prior to the date of the notice, December 8, 2009.

In order to qualify for special status, the following requirements must be met. 1) The application must have no more than 3 independent claims and no more than 20 total claims. 2) The application must not contain any multiple dependent claims. 3) The petition must state the basis for seeking special status, i.e., the claimed invention either: A) materially enhances the quality of the environment or B) materially contributes to: i) the discovery or development of renewable energy resources, ii) the more efficient utilization and conservation of energy resources, or iii) greenhouse gas emission reduction. 4) If the disclosure is not clear on its face that the claimed invention materially contributes under category (A) or (B), the petition must be accompanied by a statement by the applicant, assignee, or an attorney/agent registered to practice before the Office explaining how the materiality standard is met. 5) A statement that applicant will agree to make an election without traverse in a telephonic interview if a restriction requirement is made by the examiner. 6) The petition to make special must be filed electronically. 7) The petition must be filed at least one day prior to the date that a first Office Action appears in the Patent Application Information Retrieval (PAIR) system. 8) The petition must be accompanied by a request for early publication in compliance with 37 CFR 1.219 and include the publication fee as set forth in 37 CFR 1.18(d).

The requirement for a fee for consideration of the petition to make special for applications pertaining to Green Technologies has been waived.

The instant petition complies with items 1 – 8 above. Accordingly, the above-identified application has been accorded "special" status.

Telephone inquires concerning this decision should be directed to Tom Dunn at 571-272-1171.

The application is being forwarded to the Technology Center Art Unit 1711 for action on the merits commensurate with this decision.

/Tom Dunn/

Tom Dunn
Quality Assurance Specialist
Technology Center 1700

UNITED STATES PATENT AND TRADEMARK OFFICE

Commissioner for Patents
United States Patent and Trademark Office
P.O. Box 1450
Alexandria, VA 22313-1450
www.uspto.gov

THE EMANUELSON FIRM
4053 SANTA BARBARA
DALLAS TX 75214

MAILED

MAR 29 2011

OFFICE OF PETITIONS

In re Application of	:	
Stephens et al.	:	
Application No. 12/614,232	:	DECISION GRANTING STATUS
Filed: November 6, 2009	:	STATUS UNDER 37 CFR 1.47(a)
Attorney Docket No. 1420-1008US	:	

This is in response to the petition under 37 CFR 1.47(a), filed September 1, 2010.

The petition is **GRANTED**.

Petitioner has shown that the nonsigning inventor, Thomas Glenn Stephens, has refused to join in the filing of the above-identified application.

The above-identified application and papers have been reviewed and found in compliance with 37 CFR 1.47(a). This application is hereby accorded Rule 1.47(a) status. As provided in Rule 1.47(c), this Office will forward notice of this application's filing to the nonsigning inventor at the address given in the petition. Notice of the filing of this application will also be published in the Official Gazette.

Telephone inquiries regarding this decision should be directed to Petitions Examiner Liana Walsh at (571) 272-3206.

This matter is being referred to Technology Center Au 2839 for examination on the merits of the application.

/dab/
David Bucci
Petitions Examiner
Office of Petitions

UNITED STATES PATENT AND TRADEMARK OFFICE

Commissioner for Patents
United States Patent and Trademark Office
P.O. Box 1450
Alexandria, VA 22313-1450
www.uspto.gov

THOMAS GLENN STEPHENS
342 TOKARA COURT
GRAND PRAIRIE, TX, 75052

MAILED

MAR 29 2011

OFFICE OF PETITIONS

In re Application of	:	
Stephens et al.	:	
Application No. 12/614,232	:	ON PETITION
Filed: November 6, 2009	:	
Attorney Docket No. 1420-1008US	:	

Mr. Stephens,

You are named as a joint inventor in the above identified United States patent application, filed under the provisions of 35 U.S.C. 116 (United States Code), and 37 CFR 1.47(a), Rules of Practice in Patent Cases. Should a patent be granted on the application you will be designated therein as a joint inventor.

As a named inventor you are entitled to inspect any paper in the file wrapper of the application, order copies of all or any part thereof (at a prepaid cost per 37 CFR 1.19) or make your position of record in the application. Alternatively, you may arrange to do any of the preceding through a registered patent attorney or agent presenting written authorization from you. If you care to join in the application, counsel of record (see below) would presumably assist you. Joining in the application would entail the filing of an appropriate oath or declaration by you pursuant to 37 CFR 1.63.

Telephone inquiries regarding this communication should be directed to Petitions Examiner Liana Walsh at (571) 272-3206. Requests for information regarding your application should be directed to the File Information Unit at (703) 308-2733. Information regarding how to pay for and order a copy of the application, or a specific paper in the application, should be directed to Certification Division at (703) 308-9726 or 1 (800) 972-6382 (outside the Washington D.C. area).

/dab/
David Bucci
Petitions Examiner
Office of Petitions

UNITED STATES PATENT AND TRADEMARK OFFICE

Commissioner for Patents
United States Patent and Trademark Office
P.O. Box 1450
Alexandria, VA 22313-1450
www.uspto.gov

PROCOPIO, CORY, HARGREAVES & SAVITCH LLP
525 B STREET
SUITE 2200
SAN DIEGO CA 92101

MAILED
NOV 03 2011
OFFICE OF PETITIONS

In re Application of :
Niioka :
Application No. 12/614,257 : ON PETITION
Filed: November 6, 2009 :
Attorney Docket No. 002UT1 :
For: SYSTEM AND METHOD FOR CLEANING COAL-BURNING POWER PLANT EXHAUST GASES

This is a decision on the petition under 37 CFR 1.137(b), filed April 13, 2011, to revive the above-identified application.

The petition is **dismissed**.

Any request for reconsideration of this decision must be submitted within TWO (2) MONTHS from the mail date of this decision. Extensions of time under 37 CFR 1.136(a) are permitted. The reconsideration request should include a cover letter entitled "Renewed Petition under 37 CFR 1.137(b)." Petitioner is advised that this is not a final agency decision.

This application became abandoned for failure to timely reply to the Notice to File Missing Parts of Nonprovisional Application, mailed November 23, 2009, which set an extendable two month period for reply. No extensions of time being obtained and no reply being filed, the application became abandoned on January 24, 2010.

A grantable petition pursuant to 37 CFR 1.137(b) must be accompanied by:

(1) the required reply, unless previously filed.;

(2) the petition fee as set forth in 37 CFR 1.17(m);

(3) a statement that the **entire** delay in filing the required reply from the due date for the reply until the filing of a grantable petition pursuant to 37 CFR 1.137(b) was unintentional. The Director may

require additional information where there is a question whether the delay was unintentional; and

(4) any terminal disclaimer (and fee set forth in 37 CFR 1.20(d)) required pursuant to 37 CFR 1.137(d).

The instant petition does not satisfy requirement (1) above.

The November 23, 2009 Notice to File Missing Parts of Nonprovisional Application required applicant to submit the basic filing fee, an executed declaration, and address the appeared omission of Figures 10-12. Petitioner has not submitted an executed declaration.

Further correspondence with respect to this matter should be addressed as follows:

By mail:
Mail Stop PETITIONS
Commissioner for Patents
Post Office Box 1450
Alexandria, VA 22313-1450

By hand:
Customer Service Window
Mail Stop Petitions
Randolph Building
401 Dulany Street
Alexandria, VA 22314

By fax:
(571) 273-8300
ATTN: Office of Petitions

By internet:
EFS-Web
www.uspto.gov/ebc/efs_help.html
(for help using EFS-Web call the Patent Electronic Business Center at (866) 217-9197)

Telephone inquiries concerning this decision should be directed to the undersigned at (571) 272-3230.

Shirene Willis Brantley

Shirene Willis Brantley
Senior Petitions Attorney
Office of Petitions

UNITED STATES PATENT AND TRADEMARK OFFICE

Commissioner for Patents
United States Patent and Trademark Office
P.O. Box 1450
Alexandria, VA 22313-1450
www.uspto.gov

PROCOPIO, CORY, HARGREAVES & SAVITCH LLP
525 B STREET
SUITE 2200
SAN DIEGO CA 92101

MAILED
NOV 18 2011
OFFICE OF PETITIONS

In re Application of :
Niioka :
Application No. 12/614,257 : ON PETITION
Filed: November 6, 2009 :
Attorney Docket No. 002UT1 :
For: SYSTEM AND METHOD FOR CLEANING COAL-BURNING POWER PLANT EXHAUST GASES

This is a decision on the renewed petition under 37 CFR 1.137(b), filed November 11, 2011, to revive the above-identified application.

The petition is **granted**.

This application became abandoned for failure to timely reply to the Notice to File Missing Parts of Nonprovisional Application, mailed November 23, 2009, which set an extendable two month period for reply. No extensions of time being obtained and no reply being filed, the application became abandoned on January 24, 2010.

Applicant has submitted a proper reply to the November 23, 2009 Notice in the form of the basic filing fee, an executed declaration, and a submission addressing the appeared omission of Figures 10-12, an acceptable statement of the unintentional nature of the delay in responding to the November 23, 2009 Notice, and the small entity petition fee. Accordingly, the petition under 37 CFR 1.137(b) is granted.

After the mailing of this decision, the file will be returned to the Office of Patent Application Processing for further pre-examination processing.

Telephone inquiries concerning this decision should be directed to the undersigned at (571) 272-3230.

Shirene Willis Brantley
Senior Petitions Attorney
Office of Petitions

UNITED STATES PATENT AND TRADEMARK OFFICE

Commissioner for Patents
United States Patent and Trademark Office
P.O. Box 1450
Alexandria, VA 22313-1450
www.uspto.gov

WONG, CABELLO, LUTSCH, RUTHERFORD & BRUCCULERI, L.L.P.
20333 SH 249 6TH FLOOR
HOUSTON, TX 77070

MAILED

JUN 17 2011

OFFICE OF PETITIONS

In re Application of
Davies et al.
Application No. 12/614,307
Filed: November 6, 2009
Attorney Docket No. 0081-162001

DECISION ON PETITION
TO WITHDRAW FROM RECORD

This is a decision on the Request to Withdraw as attorney or agent of record under 37 C.F.R. § 1.36(b), filed May 17, 2011.

The request is **NOT APPROVED** because it is moot.

A review of the file record indicates that on June 14, 2011 the power of attorney to Wong, Cabello, Lutsch, Rutherford & Brucculeri L.L.P. was revoked by the assignee of the patent application. Accordingly, the request to withdraw under 37 C.F.R. § 1.36(b) is moot.

All future communications from the Office will be directed to the below-listed address until otherwise notified by applicant.

Telephone inquires concerning this decision should be directed to the undersigned at 571-272- 7751. All other inquires concerning either the examination or status of the application should be directed to the Technology Center.

/Joan Olszewski/
Joan Olszewski
Petitions Examiner
Office of Petitions

cc: Brake Hughes Bellermann LLP
c/o CPA Global
P.O. Box 52050
Minneapolis MN 55402

UNITED STATES PATENT AND TRADEMARK OFFICE

COMMISSIONER FOR PATENTS
UNITED STATES PATENT AND TRADEMARK OFFICE
P.O. BOX 1450
ALEXANDRIA, VA 22313-1450
WWW.USPTO.GOV

Paper No.

DICKSTEIN SHAPIRO LLP
1825 EYE STREET NW
Washington DC 20006-5403

MAILED
JUL 07 2011
OFFICE OF PETITIONS

In re Application of :
Seyyedy and Hush :
Application No. 12/614,314 : DECISION ON RENEWED PETITION
Filed: November 6, 2009 : PURSUANT TO
Attorney Docket No. : 37 C.F.R. § 1.47(A)
M4065.0532/P532-B :
Title: HYBRID MRAR ARRAY :
STRUCTURE AND OPERATION :

This is in response to the renewed petition pursuant to 37 C.F.R. § 1.47(a), filed on June 15, 2011.

This renewed petition is **DISMISSED as untimely.**

On November 6, 2009, the application was filed, identifying Messrs. Seyyedy and Hush as joint inventors. A fully executed declaration was included on filing, however, this declaration failed to contain the citizenship of either inventor, as required by 37 C.F.R. § 1.63(a)(3).

On November 6, 2009, Petitioner submitted an original petition pursuant to 37 C.F.R. § 1.47(a), which was dismissed via the mailing of a decision on January 4, 2010. The decision set forth, *in pertinent part*:

> If reconsideration of this decision is desired, any response to this decision must be submitted within **TWO MONTHS** (emphasis included) from the mail date of this decision. Extensions of time under 37 C.F.R. § 1.136(a) are permitted. The reply should include a cover letter entitled "Renewed Petition pursuant to 37 C.F.R. § 1.47(a)". This is not a final agency action within the meaning of 5 U.S.C § 704.
>
> Decision on original petition pursuant to 37 C.F.R. § 1.47(a), page 4.

As such, the decision set a two month period for submitting a renewed petition. More than eighteen months later, this renewed

petition was submitted to the Office. As such, this renewed petition is not timely, pursuant to 37 C.F.R. § 1.181(f).

Petitioner may wish to seek the waiver of Rule 1.181(f) via the submission of a petition pursuant to 37 C.F.R. § 1.183. In order to have this renewed petition pursuant to 37 C.F.R. § 1.47(a) entered into the record, Petitioner will need to first establish the existence of an extraordinary situation, such that justice requires the waiver of Rule 1.181(f). Petitioner will note that this discussion pertaining to the manner in which applicants may seek the waiver of a particular Rule is provided merely as a courtesy to Petitioner, and this reference should not be misinterpreted as either a commentary on the likelihood of whether any such petition would be deemed grantable, or an advisement that Petitioner should file such a petition.

Any response to this decision should indicate in a prominent manner that the attorney handling this matter is Paul Shanoski, and may be submitted by mail,[1] hand-delivery,[2] or facsimile.[3] Registered users of EFS-Web may alternatively submit a response to this decision via EFS-Web.[4]

If responding by mail, Petitioner is advised not to place the undersigned's name on the envelope. Only the information that appears in the footnote should be included - adding anything else to the address will delay the delivery of the response to the undersigned.

Telephone inquiries regarding this decision should be directed to the undersigned at (571) 272-3225.[5]

/Paul Shanoski/
Paul Shanoski
Senior Attorney
Office of Petitions

---

1 Mail Stop Petition, Commissioner for Patents, United States Patent and Trademark Office, P.O. Box 1450, Alexandria, VA, 22313-1450.
2 Customer Window, Randolph Building, 401 Dulaney Street, Alexandria, VA, 22314.
3 (571) 273-8300: please note this is a central facsimile number.
4 https://sportal.uspto.gov/authenticate/authenticateuserlocalepf.html
5 Petitioner will note that all practice before the Office should be in writing, and the action of the Office will be based exclusively on the written record in the Office. See 37 C.F.R. § 1.2. As such, Petitioner is reminded that no telephone discussion may be controlling or considered authority for any of Petitioner's further action(s).

UNITED STATES PATENT AND TRADEMARK OFFICE

Commissioner for Patents
United States Patent and Trademark Office
P.O. Box 1450
Alexandria, VA 22313-1450
www.uspto.gov

Paper No.

DICKSTEIN SHAPIRO LLP
1825 EYE STREET NW
Washington DC 20006-5403

MAILED

NOV 03 2011

OFFICE OF PETITIONS

In re Application of	:	
Seyyedy and Hush	:	
Application No. 12/614,314	:	DECISION ON SECOND RENEWED
Filed: November 6, 2009	:	PETITION PURSUANT TO
Attorney Docket No.	:	37 C.F.R. § 1.47(A) AND
M4065.0532/P532-B	:	PETITION PURSUANT TO
Title: HYBRID MRAR ARRAY	:	37 C.F.R. § 1.183
STRUCTURE AND OPERATION	:	

This is in response to the second renewed petition pursuant to 37 C.F.R. § 1.47(a) and the petition pursuant to 37 C.F.R. § 1.183, each filed concurrently on October 24, 2011.

On November 6, 2009, the application was filed, identifying Messrs. Seyyedy and Hush as joint inventors. A fully executed declaration was included on filing, however, this declaration failed to contain the citizenship of either inventor, as required by 37 C.F.R. § 1.63(a)(3).

A grantable petition pursuant to 37 C.F.R. § 1.47(a) requires:

(1) the petition fee of $200;
(2) a surcharge of either $65 or $130 if the petition is not filed at the time of filing the application, as set forth in 37 C.F.R. § 1.16(f);
(3) a statement of the last known address of each non-signing inventor;
(4) either
    a) proof that a copy of the entire application (specification, claims, drawings, and the oath or declaration) was sent or given to each non-signing inventor for review and proof that each non-signing inventor refuses to join in the application or

b) proof that each non-signing inventor cannot be found or reached after diligent effort, and;

(5) a declaration which complies with 37 C.F.R. § 1.63.

On November 6, 2009, Petitioner submitted an original petition pursuant to 37 C.F.R. § 1.47(a), which was dismissed via the mailing of a decision on January 4, 2010 which set a two month period for response, and indicated that requirements (1), (3), and (5) of 37 C.F.R. § 1.47(a) have been satisfied.

A renewed petition pursuant to 37 C.F.R. § 1.47(a) was filed on June 15, 2011, which was dismissed as untimely via the mailing of a decision on July 7, 2011.

Regarding the petition under 37 C.F.R. § 1.183, this submission is being construed as containing a request that the requirements of 37 C.F.R. § 1.181(f) be waived. 37 C.F.R. § 1.181(f) indicates that "[a]ny petition under this part not filed within two months of the mailing date of the action or notice from which relief is requested may be dismissed as untimely, except as otherwise provided." Petitioner wishes to waive this Rule, so that the renewed petition pursuant to 37 C.F.R. § 1.47(a) may be processed.

Petitioner has indicated that an extraordinary situation exists, and has established that justice requires the waiver of this Rule.

The associated $400 fee will be charged to Deposit Account No. 04-1073 in due course, as authorized on the third page of this petition.

The petition pursuant to 37 C.F.R. § 1.183 is hereby granted, to the extent that Rule § 1.181(f) is waived as it applies to the untimeliness of the response to the decision of January 4, 2010.

Regarding the second renewed petition pursuant to 37 C.F.R. § 1.47(a), Petitioner has established that a reasonable search was conducted for the non-singing inventor, letters were sent to the addresses which were obtained, and no response has been received.[1]

It follows that the fourth requirement of Rule 1.47(a) has been satisfied.

---

1 Beck declaration of facts submitted on June 15, 2011, paragraphs 10 and 12-13. See also Exhibits Four and Six through Ten and DiNatale declaration of facts, submitted concurrently therewith.

Consequently, each requirement of 37 C.F.R. § 1.47(a) has been met but for the second requirement, which is not applicable.

The above-identified application and papers have been reviewed and found in compliance with 37 C.F.R. § 1.47(a). This application is hereby accorded Rule § 1.47(a) status.

It follows that the second renewed petition pursuant to 37 C.F.R. § 1.47(a) is **GRANTED.**

As provided in Rule 1.47, this Office will forward notice of this application's filing to the non-signing inventor at the address that appears on the declaration that was submitted on November 6, 2009. Notice of the filing of this application will also be published in the Official Gazette.

The Technology Center will be notified of this decision, and jurisdiction over this application is transferred to the Technology Center, so that the application may receive further processing. The Technology Center's support staff will notify the Examiner of this decision, so that the present application can receive further processing in due course. It is noted that an *Ex Parte Quayle* Office action was mailed on July 13, 2011.

Telephone inquiries regarding *this decision* should be directed to the undersigned at (571) 272-3225.[2] All other inquiries concerning examination procedures or status of the application should be directed to the Technology Center.

Paul Shanoski
Senior Attorney
Office of Petitions
United States Patent and Trademark Office

2 Petitioner will note that all practice before the Office should be in writing, and the action of the Office will be based exclusively on the written record in the Office. See 37 C.F.R. § 1.2. As such, Petitioner is reminded that no telephone discussion may be controlling or considered authority for Petitioner's further action(s).

UNITED STATES PATENT AND TRADEMARK OFFICE

Commissioner for Patents
United States Patent and Trademark Office
P.O. Box 1450
Alexandria, VA 22313-1450
www.uspto.gov

Mirimajid Seyyedy
4665 N. Bantry PLC.
Boise, Idaho 83702

MAILED

NOV 03 2011

OFFICE OF PETITIONS

In re Application of :
Seyyedy and Hush :
Application No. 12/614,314 :
Filed: November 6, 2009 : LETTER
Attorney Docket No. M4065.0532:
/P532-B :
Title: HYBRID MRAR ARRAY :
STRUCTURE AND OPERATION :

Dear Mr. Seyyedy:

You are named a joint inventor in the above-identified United States patent application filed under the provisions of 35 U.S.C. § 116 (United States Code) and 37 C.F.R. § 1.47(a), Rules of Practice in Patent Cases. Should a patent be granted on the application, you will be designated therein as a joint inventor.

As a named inventor you are entitled to inspect any paper in the file wrapper of the application, order copies of all or any part thereof (at a prepaid cost per 37 C.F.R. § 1.19) or make your position of record in the application. Alternatively, you may arrange to do any of the preceding through a registered patent attorney or agent presenting written authorization from you. If you care to join the application, the attorney of record below would presumably assist you. Joining in the application would entail the filing of an appropriate oath or declaration by you pursuant to 37 C.F.R. § 1.63.

Telephone inquiries regarding this communication should be directed to the undersigned at (571) 272-3225. Requests for information regarding your application should be directed to the File Information Unit at (703) 308-2733. Information regarding how to pay for and order a copy of the application, or a specific paper in the application, should be directed to the Certification Division at (571) 272-3150 or 1-800-972-6382 (outside the Washington D.C. area).

/Paul Shanoski/
Paul Shanoski
Senior Attorney
Office of Petitions

cc: DICKSTEIN SHAPIRO LLP
1825 EYE STREET NW
Washington DC 20006-5403

UNITED STATES PATENT AND TRADEMARK OFFICE

Commissioner for Patents
United States Patent and Trademark Office
P.O. Box 1450
Alexandria, VA 22313-1450
www.uspto.gov

PATENT CAPITAL GROUP
6119 MCCOMMAS BLVD.
DALLAS, TX 75214

MAILED

AUG 06 2010

OFFICE OF PETITIONS

In re Application of :
David Walker et al :
Application No. 12/614,326 : DECISION ON PETITION
Filed: November 6, 2009 : TO WITHDRAW
Attorney Docket No. 039996-005100 : FROM RECORD
:

This is a decision on the Request to Withdraw as attorney or agent under 37 C.F.R. § 1.36(b) or 37 C.F.R. § 10.40 filed July 8, 2010.

The request is **APPROVED**.

A review of the file record indicates that Stephen M. Hertzler: (1) does not have power of attorney in this patent application; and (2) has been employed or otherwise engaged in the proceedings in this patent application. In view of the present decision, Stephen M. Hertzler has been withdrawn from the present application and may not prepare or submit papers under 37 C.F.R. § 1.34, or correspond in any manner in this application unless appointed in an acceptable power of attorney under 37 C.F.R. § 1.32(b).

Telephone inquires concerning this decision should be directed to Irvin Dingle at 571-272-3210.

Irvin Dingle
Petitions Examiner
Office of Petitions

cc: Stephen M. Hertzler
401 9th Street, Suite 900
Washington, DC 20004

UNITED STATES PATENT AND TRADEMARK OFFICE

Commissioner for Patents
United States Patent and Trademark Office
P.O. Box 1450
Alexandria, VA 22313-1450
www.uspto.gov

DONN K. HARMS
PATENT & TRADEMARK LAW CENTER
SUITE 100
12702 VIA CORTINA
DEL MAR CA 92014

MAILED

OCT 06 2010

OFFICE OF PETITIONS

In re Application of	:	
Nic Walton	:	
Application No. 12/614,328	:	DECISION ON PETITION
Filed: November 6, 2009	:	
Attorney Docket No. 4260-CIP	:	

This is a decision on the petition under the unintentional provisions of 37 CFR 1.137(b), filed August 23, 2010, to revive the above-identified application.

The petition is **GRANTED**.

The above-identified application became abandoned for failure to reply in a timely manner to the Notice to File Missing Parts of Nonprovisional Application (Notice) mailed November 23, 2009. The Notice set a period for reply of two (2) months from the mail date of the Notice. No extensions of time under the provisions of 37 CFR 1.136(a) were obtained. Accordingly, the above-identified application became abandoned on January 24, 2010. A Notice of Abandonment was mailed on August 2, 2010.

The petition satisfies the requirements of 37 CFR 1.137(b) in that petitioner has supplied (1) an Oath or Declaration and the $65.00 Surcharge fee; (2) the petition fee of $810.00, and (3) a proper statement of unintentional delay.

Telephone inquiries concerning this decision should be directed to the undersigned at (571) 272-7751.

This application is being referred to the Office of Patent Application Processing for further processing in accordance with this decision on petition.

Joan Olszewski
Petitions Examiner
Office of Petitions

UNITED STATES PATENT AND TRADEMARK OFFICE

Commissioner for Patents
United States Patent and Trademark Office
P.O. Box 1450
Alexandria, VA 22313-1450
www.uspto.gov

MAILED

OCT 01 2010

OFFICE OF PETITIONS

MICHAEL L. LEETZOW, P.A.
2393 CREST RIDGE CT.
SANFORD FL 32771

In re Application of :
Darrell R. CHILDERS, et al :
Application No. 12/614,391 : DECISION ON PETITION
Filed: November 6, 2009 :
Attorney Docket No. USCO-030 :

This is a decision on the petition under the unintentional provisions of 37 CFR 1.137(b), filed August 23, 2010, to revive the above-identified application.

The petition is **GRANTED.**

The application became abandoned for failure to reply in a timely manner to the Notice to File Missing Parts of Nonprovisional Application mailed November 23, 2009. The Notice set a period for reply of **two (2) months** from the mail date of the Notice. No extensions of time under the provisions of 37 CFR 1.136(a) were obtained. Accordingly, the application became abandoned on January 24, 2010.

The petition satisfies the requirements of 37 CFR 1.137(b) in that petitioner has supplied (1) the reply in the form of a properly signed declaration and required fee; (2) the petition fee of $1620; and (3) the required statement of unintentional delay.

Telephone inquiries concerning this decision should be directed to the undersigned at (571) 272-6735.

All other inquires should be directed to the Office of Data Management at (571) 272-4200.

This application is being referred to the Office of Data Management for further pre-examination processing.

/DCG/
Diane C. Goodwyn
Petitions Examiner
Office of Petitions

UNITED STATES PATENT AND TRADEMARK OFFICE

Commissioner for Patents
United States Patent and Trademark Office
P.O. Box 1450
Alexandria, VA 22313-1450
www.uspto.gov

Robert Swinderman
54 Ocean St
Palm Coast FL 32137

MAILED
APR 26 2011
OFFICE OF PETITIONS

In re Application of :
Robert Todd Swinderman et al. :
Application No. 12/614,404 : ON PETITION
Filed: November 7, 2009 :
Attorney Docket No. :

This is a decision on the petition under the unintentional provisions of 37 CFR 1.137(b), filed January 4, 2011, to revive the above-identified application.

The application became abandoned for failure to reply in a timely manner to the Notice to File Corrected Application Papers (Notice), mailed November 23, 2009. The Notice set a period for reply of two (2) months from the mail date of the Notice. No extensions of time under the provisions of 37 CFR 1.136(a) were obtained. Accordingly, the application became abandoned on January 24, 2010.

The petition is hereby **DISMISSED**.

A grantable petition under 37 CFR 1.137(b) must be accompanied by: (1) the required reply, unless previously filed; (2) the petition fee as set forth in 37 CFR 1.17(m); (3) a statement that the entire delay in filing the required reply from the due date for the reply until the filing of a grantable petition pursuant to 37 CFR 1.137(b) was unintentional; and (4) any terminal disclaimer (and fee as set forth in 37 CFR 1.20(d)) required by 37 CFR 1.137(d). Where there is a question as to whether either the abandonment or the delay in filing a petition under 37 CFR 1.137 was unintentional, the Director may require additional information. See MPEP 711.03(c)(II)(C) and (D). The instant petition lacks item(s) (1).

As to item (1)

The petition does not satisfy item (1) in that the drawings filed concurrently with the instant petition lack the labeling "Replacement Sheet" for compliance with 37 CFR 1.84(c) and 37 CFR 1.121(d) required by the Notice.

Additionally, the petition was only signed by one inventor. In this regard, petitioner's attention is directed to 37 CFR 1.33(b), which states.

> (b) Amendments and other papers. Amendments and other papers, except for written assertions pursuant to § 1.27(c)(2)(ii) of this part, filed in the application must be signed by:
> (1) A registered patent attorney or patent agent of record appointed in compliance with § 1.32(b);
> (2) A registered patent attorney or patent agent not of record who acts in a representative capacity under the provisions of § 1.34;
> (3) An assignee as provided for under §3.71(b) of this chapter; or
> (4) All of the applicants (§ 1.41(b)) for patent, unless there is an assignee of the entire interest and such assignee has taken action in the application in accordance with § 3.71 of this chapter.

An unsigned amendment (or other paper) or one not properly signed by a person having authority to prosecute the application is not entered. This applies, for instance, where the amendment (or other paper) is signed by only one of two applicants and the one signing has not been given a power of attorney by the other applicant.

Therefore, as the petition is not signed by all the inventors and the record herein fails to disclose that petitioner herein (Robert Todd Swinderman) was ever given a power of attorney to act on behalf of inventor Carl James Reinertsen, or that he is an assignee of the entire interest and has complied with the provisions of 37 CFR 3.73(b).

Any request for reconsideration of this decision must be submitted within **TWO (2) MONTHS** from the mail date of this decision. Extensions of time under 37 CFR 1.136(a) are permitted. The reconsideration request should include a cover letter entitled "**Renewed Petition under 37 CFR 1.137(b).**" This is **not** a final agency action within the meaning of 5 U.S.C. § 704.

Further correspondence with respect to this matter should be addressed as follows:

By Mail: Mail Stop PETITION
Commissioner for Patents
P. O. Box 1450
Alexandria, VA 22313-1450

By hand: U. S. Patent and Trademark Office
Customer Service Window, Mail Stop Petitions
Randolph Building
401 Dulany Street
Alexandria, VA 22314

The centralized facsimile number is **(571) 273-8300.**

Telephone inquiries concerning this decision should be directed to JoAnne Burke at 571-272-4584

JoAnne Burke
Petitions Examiner
Office of Petitions

UNITED STATES PATENT AND TRADEMARK OFFICE

Commissioner for Patents
United States Patent and Trademark Office
P.O. Box 1450
Alexandria, VA 22313-1450
www.uspto.gov

Robert Swinderman
54 Ocean St
Palm Coast FL 32137

MAILED

JUL 22 2011

OFFICE OF PETITIONS

In re Application of :
Robert Todd Swinderman et al. :
Application No. 12/614,404 :
Filed: November 7, 2009 :
Attorney Docket No. :

ON PETITION

This is a decision on the renewed petition under the unintentional provisions of 37 CFR 1.137(b), filed June 28, 2011[1], to revive the above-identified application.

The application became abandoned for failure to reply in a timely manner to the Notice to File Corrected Application Papers (Notice), mailed November 23, 2009. The Notice set a period for reply of two (2) months from the mail date of the Notice. No extensions of time under the provisions of 37 CFR 1.136(a) were obtained. Accordingly, the application became abandoned on January 24, 2010.

The petition is hereby **GRANTED**.

The petition satisfies the requirements of 37 CFR 1.137(b) in that petitioner has supplied (1) the reply in the form replacement drawings, oath and declaration, and surcharge (2) the petition fee of $810, and (3) a proper statement of unintentional delay.

A terminal disclaimer is required in a utility/plant application when it is filed on or before June 8, 1995. Therefore, since the application was filed on or after June 8, 1995, the terminal disclaimer filed on January 4, 2011, is unnecessary and will not be entered. Accordingly, petitioner may request a refund of this fee by writing to the following address: Mail Stop 16,

[1] Accompanied with a Certificate of Mailing dated June 25, 2011.

Commissioner for Patents, P. O. Box 1450, Alexandria, VA 22313-1450. A copy of this decision should accompany petitioner's request.

Telephone inquiries concerning this decision should be directed to JoAnne Burke at (571)272-4584.

This application is being referred to the Office of Patent Application Processing for appropriate action in the normal course of business on the reply received.

JoAnne Burke
Petitions Examiner
Office of Petitions

cc: Carl James Reinersten
57 Ocean St.
Palm Coast, FL 32137

Doc Code: PET.AUTO Document Description: Petition automatically granted by EFS-Web	PTO/SB/140 U.S. Patent and Trademark Office Department of Commerce

Electronic Petition Request	**PETITION TO WITHDRAW AN APPLICATION FROM ISSUE AFTER PAYMENT OF THE ISSUE FEE UNDER 37 CFR 1.313(c)**
Application Number	12614405
Filing Date	07-Nov-2009
First Named Inventor	Hye SHIN
Art Unit	2835
Examiner Name	MICHAIL DATSKOVSKIY
Attorney Docket Number	8753.P079
Title	HEAT DISSIPATING CIRCUIT BOARD AND METHOD OF MANUFACTURING THE SAME

An application may be withdrawn from issue for further action upon petition by the applicant. To request that the Office withdraw an application from issue, applicant must file a petition under this section including the fee set forth in § 1.17(h) and a showing of good and sufficient reasons why withdrawal of the application from issue is necessary.

APPLICANT HEREBY PETITIONS TO WITHDRAW THIS APPLICATION FROM ISSUE UNDER 37 CFR 1.313(c).

A grantable petition requires the following items:
(1) Petition fee; and
(2) One of the following reasons:
(a) Unpatentability of one or more claims, which must be accompanied by an unequivocal statement that one or more claims are unpatentable, an amendment to such claim or claims, and an explanation as to how the amendment causes such claim or claims to be patentable;
(b) Consideration of a request for continued examination in compliance with § 1.114 (for a utility or plant application only); or
(c) Express abandonment of the application. Such express abandonment may be in favor of a continuing application, but not a CPA under 37 CFR 1.53(d).

Petition Fee

☐ Applicant claims SMALL ENTITY status. See 37 CFR 1.27.

☐ Applicant is no longer claiming SMALL ENTITY status. See 37 CFR 1.27(g)(2).

☐ Applicant(s) status remains as SMALL ENTITY.

☒ Applicant(s) status remains as other than SMALL ENTITY

Reason for withdrawal from issue

◯ One or more claims are unpatentable ◉ Consideration of a request for continued examination (RCE) (List of Required Documents and Fees) ◯ Applicant hereby expressly abandons the instant application (any attorney/agent signing for this reason must have power of attorney pursuant to 37 CFR 1.32(b)).
RCE request,submission, and fee. ☐ I certify, in accordance with 37 CFR 1.4(d)(4) that : The RCE request ,submission, and fee have already been filed in the above-identified application on ☒ Are attached.
THIS PORTION MUST BE COMPLETED BY THE SIGNATORY OR SIGNATORIES I certify, in accordance with 37 CFR 1.4(d)(4) that I am: ◉ An attorney or agent registered to practice before the Patent and Trademark Office who has been given power of attorney in this application. ◯ An attorney or agent registered to practice before the Patent and Trademark Office, acting in a representative capacity. ◯ A sole inventor ◯ A joint inventor; I certify that I am authorized to sign this submission on behalf of all of the inventors ◯ A joint inventor; all of whom are signing this e-petition ◯ The assignee of record of the entire interest that has properly made itself of record pursuant to 37 CFR 3.71

Signature	/Robert B. O'Rourke/
Name	Robert B. O'Rourke
Registration Number	46972

UNITED STATES PATENT AND TRADEMARK OFFICE

Commissioner for Patents
United States Patent and Trademark Office
P.O. Box 1450
Alexandria, VA 22313-1450
www.uspto.gov

Decision Date : March 9, 2012

In re Application of :

Hye SHIN

DECISION ON PETITION

UNDER CFR 1.313(c)(2)

Application No : 12614405

Filed : 07-Nov-2009

Attorney Docket No : 8753.P079

This is an electronic decision on the petition under 37 CFR 1.313(c)(2), filed March 9, 2012 , to withdraw the above-identified application from issue after payment of the issue fee.

The petition is **GRANTED.**

The above-identified application is withdrawn from issue for consideration of a submission under 37 CFR 1.114 (request for continued examination). See 37 CFR 1.313(c)(2).

Petitioner is advised that the issue fee paid in this application cannot be refunded. If, however, this application is again allowed, petitioner may request that it be applied towards the issue fee required by the new Notice of Allowance.

Telephone inquiries concerning this decision should be directed to the Patent Electronic Business Center (EBC) at 866-217-9197.

This application file is being referred to Technology Center AU 2835 for processing of the request for continuing examination under 37 CFR 1.114 .

Office of Petitions

UNITED STATES PATENT AND TRADEMARK OFFICE

Commissioner for Patents
United States Patent and Trademark Office
P.O. Box 1450
Alexandria, VA 22313-1450
www.uspto.gov

MAILED

DEC 03 2010

OFFICE OF PETITIONS

THE LAW OFFICES OF CALVIN B. WARD
18 CR.OW CANYON COURT, SUITE 305
SAN RAMON, CA 94583

In re Application:	:	
Frank T. Shum	:	
Application No. 12/614,430	:	NOTICE
Filed: November 8, 2009	:	
Attorney Docket No. 54689-D2	:	

This is a notice regarding your request for acceptance of a fee deficiency submission filed on October 22, 2010, under 37 CFR 1.28.

The Office no longer investigates or rejects original or reissue patent under 37 CFR 1.56. **1098 Off. Gaz. Pat. Office 502 (January 3, 1989)**. Therefore, nothing in this Notice is intended to imply that an investigation was done.

Your fee deficiency submission under 37 CFR 1.28 is hereby **ACCEPTED**.

This patent application is no longer entitled to small entity status. Accordingly, all future fees paid in this patent must be paid at the large entity rate.

Inquiries related to this communication should be directed to the undersigned at (571) 272-6059.

Alicia Kelley
Petitions Examiner
Office of Petitions

SPE RESPONSE FOR CERTIFICATE OF CORRECTION

Paper No.: _____

DATE : 04/13/11

TO SPE OF : ART UNIT 2826

SUBJECT : Request for Certificate of Correction for Appl. No 12/614,553.: 7893445

Please respond to this request for a certificate of correction within 7 days.

FOR IFW FILES:

Please review the requested changes/corrections as shown in the **COCIN** document(s) in the IFW application image. No new matter should be introduced, nor should the scope or meaning of the claims be changed.

Please complete the response (see below) and forward the completed response to scanning using document code **COCX**.

FOR PAPER FILES:

Please review the requested changes/corrections as shown in the attached certificate of correction. Please complete this form (see below) and forward it with the file to:

Certificates of Correction Branch (CofC)

Should the change(s) Be made?

RoChaun Johnson
Certificates of Correction Branch
571 272-0470

Thank You For Your Assistance

The request for issuing the above-identified correction(s) is hereby:

Note your decision on the appropriate box.

X **Approved**	**All** changes apply.
☐ **Approved in Part**	Specify below which changes **do not** apply.
☐ **Denied**	State the reasons for denial below.

Comments: _____

_____

_____

_____

_____

/Davienne Monbleau/ — **SPE**

2826 — **Art Unit**

UNITED STATES PATENT AND TRADEMARK OFFICE

UNITED STATES DEPARTMENT OF COMMERCE
United States Patent and Trademark Office
Address: COMMISSIONER FOR PATENTS
P.O. Box 1450
Alexandria, Virginia 22313-1450
www.uspto.gov

APPLICATION NO.	FILING DATE	FIRST NAMED INVENTOR	ATTORNEY DOCKET NO.	CONFIRMATION NO.
12/614,574	11/09/2009	SHAN-JU LIN	US26740	8848

7590 02/17/2011

Altis Law Group, Inc.
ATTN: Steven Reiss
288 SOUTH MAYO AVENUE
CITY OF INDUSTRY, CA 91789

EXAMINER	
NOLAN, PETER D	

ART UNIT	PAPER NUMBER
3661	

NOTIFICATION DATE	DELIVERY MODE
02/17/2011	ELECTRONIC

DECISION GRANTING PETITION UNDER 37 CFR 1.138(d)

The declaration of express abandonment is recognized

This is in response to the petition under 37 CFR 1.138(d), requesting for a refund of any previously paid search fee and excess claims fee in the above-identified application.

The petition is granted.

The express abandonment is recognized. Any previously paid search fee and excess claims fee are hereby refunded.

Telephone inquiries should be directed to the Office of Data Management at (571) 272-4200.

Patent Publication Branch
Office of Data Management

UNITED STATES PATENT AND TRADEMARK OFFICE

UNITED STATES DEPARTMENT OF COMMERCE
United States Patent and Trademark Office
Address: COMMISSIONER FOR PATENTS
P.O. Box 1450
Alexandria, Virginia 22313-1450
www.uspto.gov

APPLICATION NO.	FILING DATE	FIRST NAMED INVENTOR	ATTORNEY DOCKET NO.	CONFIRMATION NO.
12/614,574	11/09/2009	SHAN-JU LIN	US26740	8848

54000 7590 02/17/2011

Altis Law Group, Inc.
ATTN: Steven Reiss
288 SOUTH MAYO AVENUE
CITY OF INDUSTRY, CA 91789

EXAMINER	
NOLAN, PETER D	

ART UNIT	PAPER NUMBER
3661	

NOTIFICATION DATE	DELIVERY MODE
02/17/2011	ELECTRONIC

Please find below and/or attached an Office communication concerning this application or proceeding.

The time period for reply, if any, is set in the attached communication.

Notice of the Office communication was sent electronically on above-indicated "Notification Date" to the following e-mail address(es):

eoa-altis@foxconn.com
eoa-itec@foxconn.com
eoa-proce@foxconn.com

Notice of Abandonment	Application No.	Applicant(s)	
	12/614,574	LIN, SHAN-JU	
	Examiner	Art Unit	
	Nolan,Peter	3661	

-- The MAILING DATE of this communication appears on the cover sheet with the correspondence address--

This application is abandoned in view of:

1. ☐ Applicant's failure to timely file a proper reply to the Office letter mailed on _____.
   (a) ☐ A reply was received on _____ (with a Certificate of Mailing or Transmission dated _____), which is after the expiration of the period for reply (including a total extension of time of _____ month(s)) which expired on _____.
   (b) ☐ A proposed reply was received on _____, but it does not constitute a proper reply under 37 CFR 1.113 (a) to the final rejection.
   (A proper reply under 37 CFR 1.113 to a final rejection consists only of: (1) a timely filed amendment which places the application in condition for allowance; (2) a timely filed Notice of Appeal (with appeal fee); or (3) a timely filed Request for Continued Examination (RCE) in compliance with 37 CFR 1.114).
   (c) ☐ A reply was received on _____ but it does not constitute a proper reply, or a bona fide attempt at a proper reply, to the non-final rejection. See 37 CFR 1.85(a) and 1.111. (See explanation in box 7 below).
   (d) ☐ No reply has been received.

2. ☐ Applicant's failure to timely pay the required issue fee and publication fee, if applicable, within the statutory period of three months from the mailing date of the Notice of Allowance (PTOL-85).
   (a) ☐ The issue fee and publication fee, if applicable, was received on _____ (with a Certificate of Mailing or Transmission dated _____), which is after the expiration of the statutory period for payment of the issue fee (and publication fee) set in the Notice of Allowance (PTOL-85).
   (b) ☐ The submitted fee of $_____ is insufficient. A balance of $_____ is due.
   The issue fee required by 37 CFR 1.18 is $_____. The publication fee, if required by 37 CFR 1.18(d), is $_____.
   (c) ☐ The issue fee and publication fee, if applicable, has not been received.

3. ☐ Applicant's failure to timely file corrected drawings as required by, and within the three-month period set in, the Notice of Allowability (PTO-37).
   (a) ☐ Proposed corrected drawings were received on _____ (with a Certificate of Mailing or Transmission dated _____), which is after the expiration of the period for reply.
   (b) ☐ No corrected drawings have been received.

4. ☒ The letter of express abandonment which is signed by the attorney or agent of record, the assignee of the entire interest, or all of the applicants.

5. ☐ The letter of express abandonment which is signed by an attorney or agent (acting in a representative capacity under 37 CFR 1.34(a)) upon the filing of a continuing application.

6. ☐ The decision by the Board of Patent Appeals and Interference rendered on _____ and because the period for seeking court review of the decision has expired and there are no allowed claims.

7. ☐ The reason(s) below:

/Niomi Farmer/
Office of Data Management
Art Unit: 3974

Petitions to revive under 37 CFR 1.137(a) or (b), or requests to withdraw the holding of abandonment under 37 CFR 1.181, should be promptly filed to minimize any negative effects on patent term.

Doc Code: PPH.PCT.652
Document Description: Petition to make special under PCT-Patent Pros Hwy

PTO/SB/20PCT-EP (01-10)
Approved for use through 01/31/2012. OMB 0651-0058
U.S. Patent and Trademark Office; U. S. DEPARTMENT OF COMMERCE
Under the Paperwork Reduction Act of 1995, no persons are required to respond to a collection of information unless it displays a valid OMB control number.

REQUEST FOR PARTICIPATION IN THE PATENT COOPERATION TREATY - PATENT PROSECUTION HIGHWAY (PCT-PPH) PILOT PROGRAM BETWEEN THE EUROPEAN PATENT OFFICE (EPO) AND THE USPTO

Application No:	12/614,600	Filing date:	09-NOV-2009
First Named Inventor:	Terence Gordon Royle		
Title of the Invention:	Cantilever Comb Guard		

THIS REQUEST FOR PARTICIPATION IN THE PCT-PPH PILOT PROGRAM ALONG WITH THE REQUIRED DOCUMENTS MUST BE SUBMITTED VIA EFS-WEB. INFORMATION REGARDING EFS-WEB IS AVAILABLE AT HTTP://WWW.USPTO.GOV/EBC/EFS_HELP.HTML

APPLICANT HEREBY REQUESTS PARTICIPATION IN THE PCT-PPH PROGRAM AND PETITIONS TO MAKE THE ABOVE-IDENTIFIED APPLICATION SPECIAL UNDER THE PCT-PPH PROGRAM.

The above-identified application is (1) a national stage entry of the corresponding PCT application, or (2) a national stage entry of another PCT application which claims priority to the corresponding PCT application, or (3) a national application that claims domestic/ foreign priority to the corresponding PCT application, or (4) a national application which forms the basis for the priority claim in the corresponding PCT application.

The corresponding PCT application number(s) is/are: PCT/US2010/055758

The international date of the corresponding PCT application(s) is/are: November 8, 2010

I. List of Required Documents:

a. **A copy of the latest international work product (WO/ISA, WO/IPEA, or IPER) in the above–identified corresponding PCT application(s)**

☐ Is attached

☑ Is not attached because the document is already in the U.S. application.

b. **A copy of all claims which were indicated as having novelty, inventive step and industrial applicability in the above-identified corresponding PCT application(s).**

☑ Is attached.

☐ Is not attached because the document is already in the U.S. application.

c. **English translations of the documents in a. and b. above are attached (if the documents are not in the English language). A statement that the English translation is accurate is attached for the document in b. above.**

d. **(1) An information disclosure statement listing the documents cited in the international work products (ISR, WO/ISA, WO/IPEA, IPER) of the corresponding PCT application.**

☐ Is attached

☑ Has already been filed in the above-identified U.S. application on March 21, 2011

(2) Copies of all documents (except) for U.S. patents or U.S. patent application publications)

☐ Are attached.

☑ Have already been filed in the above-identified U.S. application on March 21, 2011

This collection of information is required by 35 U.S.C. 119, 37 CFR 1.55, and 37 CFR 1.102(d). The information is required to obtain or retain a benefit by the public, which is to file (and by the USPTO to process) an application. Confidentiality is governed by 35 U.S.C. 122 and 37 CFR 1.11 and 1.14. This collection is estimated to take 2 hours to complete, including gathering, preparing, and submitting the completed application form to the USPTO. Time will vary depending upon the individual case. Any comments on the amount of time you require to complete this form and/or suggestions for reducing this burden should be sent to the Chief Information Officer, U.S. Patent and Trademark Office, U.S. Department of Commerce, P.O. Box 1450, Alexandria, VA 22313-1450. DO NOT SEND FEES OR COMPLETED FORMS TO THIS ADDRESS.

PTO/SB/20PCT-EP (01-10)
Approved for use through 01/31/2012. OMB 0651-0058
U.S.Patent and Trademark Office; U.S. DEPARTMENT OF COMMERCE
Under the Paperwork Reduction Act of 1995, no persons are required to respond to a collection of information unless it displays a valid OMB control number.

REQUEST FOR PARTICIPATION IN THE PCT-PPH PILOT PROGRAM BETWEEN THE EPO AND THE USPTO

(continued)

Application No.:	12/614,600
First Named Inventor:	Terence Gordon Royle

II. Claims Correspondence Table:

Claims in US Application	Patentable Claims in the corresponding PCT Application	Explanation regarding the correspondence
12	1	US claim 12 has all of the same limitations as claim 1 of the corresponding PCT application
13	2	US claim 13 has all of the same limitations as claim 2 of the corresponding PCT application
14	4	US claim 14 has all of the same limitations as claim 4 of the corresponding PCT application
15	5	US claim 15 has all of the same limitations as claim 5 of the corresponding PCT application
16	6	US claim 16 has all of the same limitations as claim 6 of the corresponding PCT application
17	7	US claim 17 has all of the same limitations as claim 7 of the corresponding PCT application
18	8	US claim 18 has all of the same limitations as claim 8 of the corresponding PCT application
19	13	US claim 19 has all of the same limitations as claim 13 of the corresponding PCT application
20	15	US claim 20 has all of the same limitations as claim 15 of the corresponding PCT application
21	14	US claim 21 has all of the same limitations as claim 14 of the corresponding PCT application
22	9	US claim 22 has all of the same limitations as claim 9 of the corresponding PCT application
23	10	US claim 23 has all of the same limitations as claim 10 of the corresponding PCT application
24	11	US claim 24 has all of the same limitations as claim 11 of the corresponding PCT application

III. All the claims in the US application sufficiently correspond to the patentable claims in the corresponding PCT application.

IV. Payment of Fees:

The petition fee under 37 CFR 1.17(h) as required by 37 CFR 1.102(d) must be paid via EFS-Web (using credit card, authorization to charge a deposit account, or electronic funds transfer).

Signature	/John M. Lipchitz/	Date	October 27, 2011
Name (Print/Typed)	John M. Lipchitz	Registration Number	60,442

Privacy Act Statement

The **Privacy Act of 1974 (P.L. 93-579)** requires that you be given certain information in connection with your submission of the attached form related to a patent application or patent. Accordingly, pursuant to the requirements of the Act, please be advised that: (1) the general authority for the collection of this information is 35 U.S.C. 2(b)(2); (2) furnishing of the information solicited is voluntary; and (3) the principal purpose for which the information is used by the U.S. Patent and Trademark Office is to process and/or examine your submission related to a patent application or patent. If you do not furnish the requested information, the U.S. Patent and Trademark Office may not be able to process and/or examine your submission, which may result in termination of proceedings or abandonment of the application or expiration of the patent.

The information provided by you in this form will be subject to the following routine uses:

1. The information on this form will be treated confidentially to the extent allowed under the Freedom of Information Act (5 U.S.C. 552) and the Privacy Act (5 U.S.C 552a). Records from this system of records may be disclosed to the Department of Justice to determine whether disclosure of these records is required by the Freedom of Information Act.
2. A record from this system of records may be disclosed, as a routine use, in the course of presenting evidence to a court, magistrate, or administrative tribunal, including disclosures to opposing counsel in the course of settlement negotiations.
3. A record in this system of records may be disclosed, as a routine use, to a Member of Congress submitting a request involving an individual, to whom the record pertains, when the individual has requested assistance from the Member with respect to the subject matter of the record.
4. A record in this system of records may be disclosed, as a routine use, to a contractor of the Agency having need for the information in order to perform a contract. Recipients of information shall be required to comply with the requirements of the Privacy Act of 1974, as amended, pursuant to 5 U.S.C. 552a(m).
5. A record related to an International Application filed under the Patent Cooperation Treaty in this system of records may be disclosed, as a routine use, to the International Bureau of the World Intellectual Property Organization, pursuant to the Patent Cooperation Treaty.
6. A record in this system of records may be disclosed, as a routine use, to another federal agency for purposes of National Security review (35 U.S.C. 181) and for review pursuant to the Atomic Energy Act (42 U.S.C. 218(c)).
7. A record from this system of records may be disclosed, as a routine use, to the Administrator, General Services, or his/her designee, during an inspection of records conducted by GSA as part of that agency's responsibility to recommend improvements in records management practices and programs, under authority of 44 U.S.C. 2904 and 2906. Such disclosure shall be made in accordance with the GSA regulations governing inspection of records for this purpose, and any other relevant (*i.e.*, GSA or Commerce) directive. Such disclosure shall not be used to make determinations about individuals.
8. A record from this system of records may be disclosed, as a routine use, to the public after either publication of the application pursuant to 35 U.S.C. 122(b) or issuance of a patent pursuant to 35 U.S.C. 151. Further, a record may be disclosed, subject to the limitations of 37 CFR 1.14, as a routine use, to the public if the record was filed in an application which became abandoned or in which the proceedings were terminated and which application is referenced by either a published application, an application open to public inspection or an issued patent.
9. A record from this system of records may be disclosed, as a routine use, to a Federal, State, or local law enforcement agency, if the USPTO becomes aware of a violation or potential violation of law or regulation.

UNITED STATES PATENT AND TRADEMARK OFFICE

Commissioner for Patents
United States Patent and Trademark Office
P.O. Box 1450
Alexandria, VA 22313-1450
www.uspto.gov

THE PROCTER & GAMBLE COMPANY
GLOBAL LEGAL DEPARTMENT - IP
SYCAMORE BUILDING - 4TH FLOOR
299 EAST SIXTH STREET
CINCINNATI OH 45202

MAILED
MAR 12 2012
OFFICE OF PETITIONS

In re Application of
Terence Gordon ROYLE
Application No.: 12/614,600
Filed: November 09, 2009
Attorney Docket No.: Z-08405
For: CANTILEVER COMB GUARD

: DECISION ON REQUEST TO
: PARTICIPATE IN THE PATENT
: PROSECUTION HIGHWAY
: PROGRAM AND PETITION
: TO MAKE SPECIAL UNDER
: 37 CFR 1.102(a)

This is a decision on the request to participate in the PCT Patent Prosecution Highway (PCT-PPH) pilot program and the petition under 37 CFR 1.102(a), filed on October 27, 2011, to make the above-identified application special.

The request and petition are **DENIED**.

Discussion

A grantable request to participate in the PCT-PPH pilot program and petition to make special require:

1) The U.S. application must have an eligible relationship to one or more PCT applications where the ISA or IPEA are Australia, Austria, China, EPO, Finland, JPO, Korea, Nordic Patent Institute, Russia, Spain, Sweden, or USPTO;

(2) At least one claim in the PCT application has novelty, inventive step, and industrial applicability and must be free of any observations in Box VIII in the latest work product in the international stage or applicant must identify and explain why the claim(s) is/are not subject to the observation in Box VIII;

(3) Applicant must submit a copy of the claim(s) from the PCT application(s) that have novelty, inventive step, and industrial applicability along with an English translation thereof and a statement that the English translation is accurate, if the claims are not in the English language;

(4) All the claims in the U.S. application must sufficiently correspond or be amended to sufficiently correspond to the claim(s) that have novelty, inventive step, and industrial applicability in the PCT application(s);

(5) Examination of the U.S. application has not begun;

(6) Applicant must submit a copy of the latest international work product from the PCT application indicating that the claim(s) have novelty, inventive step, and industrial applicability along with an English translation thereof.

(7) Applicant must submit an IDS listing the documents cited by the PCT examiner in the international work product along with copies of documents except U.S. patents or U.S. patent application publications.

(8) Applicant is required to submit a claims correspondence table in English which indicates how all the claims in the U.S. application correspond to the claims indicated as having novelty, inventive step and industrial applicability in the latest international work product.

Requirements (1-4) and (6-8) above are considered to have been met. However, the request to participate in the PPH pilot program and petition fail to meet requirements (5).

Regarding the requirement of condition (5), examination of the application has begun.

Applicant is given ONE opportunity within a time period of **ONE MONTH or THIRTY DAYS**, whichever is longer, from the mailing date of this decision to correct the deficiencies. **NO EXTENSION OF TIME UNDER 37 CFR 1.136 IS PERMITTED.** If the deficiencies are not corrected with the time period given, the application will await action in its regular turn.

Response must be filed via the Electronic Filing System (EFS) using the document description: Petition to make special under PCT – Patent Pros Hwy. Any preliminary amendments and IDS submitted with the PPH documents must be separately indexed as a preliminary amendment and IDS, respectively.

Telephone inquiries concerning this decision should be directed to Michelle R. Eason at 571-272-4231.

All other inquiries concerning the examination or status of the application is accessible in the PAIR system at http://www.uspto.gov/ebc/index.html.

Anthony Knight
Director
Office of Petitions

UNITED STATES PATENT AND TRADEMARK OFFICE

Commissioner for Patents
United States Patent and Trademark Office
P.O. Box 1450
Alexandria, VA 22313-1450
www.uspto.gov

JON E. KAPPES
LAW OFFICES OF STEVEN G. LISA, LTD.
C/O INTELLEVATE, LLC.
P.O. BOX 52050
MINNEAPOLIS, MN 55402

MAILED

AUG 05 2011

OFFICE OF PETITIONS

In re Application of :
Edwin A. SUOMINEN :
Application No. 12/614,623 : DECISION GRANTING PETITION
Filed: November 9, 2009 : UNDER 37 CFR 1.313(c)(2)
Attorney Docket No. **WRF-B** :

This is a decision on the petition under 37 CFR 1.313(c)(2), filed August 3, 2011, to withdraw the above-identified application from issue after payment of the issue fee.

The petition is **GRANTED**.

The above-identified application is withdrawn from issue for consideration of a submission under 37 CFR 1.114 (request for continued examination). See 37 CFR 1.313(c)(2).

Petitioner is advised that the issue fee paid on March 16, 2011 cannot be refunded. If, however, this application is again allowed, petitioner may request that it be applied towards the issue fee required by the new Notice of Allowance.[1]

Telephone inquiries should be directed to the undersigned at (571) 272-7253.

This application is being referred to Technology Center AU 2617 for processing of the request for continued examination under 37 CFR 1.114 and for consideration of the concurrently filed information disclosure statement.

/Monica A. Graves/
Petitions Examiner,Office of Petitions

---

[1] *The request to apply the issue fee to the new Notice may be satisfied by completing and returning the new Part B – Fee(s) Transmittal Form (along with any balance due at the time of submission). Petitioner is advised that the Issue Fee Transmittal Form must be completed and timely submitted to avoid abandonment of the application.*

UNITED STATES PATENT AND TRADEMARK OFFICE

Commissioner for Patents
United States Patent and Trademark Office
P.O. Box 1450
Alexandria, VA 22313-1450
www.uspto.gov

MINTZ, LEVIN, COHN, FERRIS, GLOVSKY AND POPEO, P.C.
ONE FINANCIAL CENTER
BOSTON MA 02111

MAILED

NOV 16 2010

OFFICE OF PETITIONS

In re Application of
Thomas PAYNE, et al
Application No. 12/614,650
Filed: November 9, 2009
Attorney Docket No. 28682-510001US

DECISION ON PETITION
TO WITHDRAW
FROM RECORD

This is a decision on the Request to Withdraw as attorney or agent of record under 37 C.F.R. § 1.36(b), filed October 26, 2010.

The request is **NOT APPROVED.**

The Office will no longer accept address changes to a new practitioner or law firm filed with a Request, absent the filing of a power of attorney to the new representative. The Office will either change the correspondence address of record to the most current address information provided for the assignee of the entire interest who properly became of record under 37 CFR 3.71 or, if no assignee of the entire interest has properly been made of record under 37 CFR 3.71, the most current address information provided for the first named inventor.

In this regard, the request cannot be approved because the change of correspondence address is not that of an assignee of the entire interest who has properly become of record as set forth in 37 CRF 3.71 or the first named inventor.

All future communications from the Office will continue to be directed to the above-listed address until otherwise notified by applicant.

Telephone inquiries concerning this decision should be directed to the undersigned at (571) 272-6735.

/DCG/
Diane C. Goodwyn
Petitions Examiner
Office of Petitions

Cc: SEAN COUGHLIN, ESQ.
MINTZ LEVIN COHN FERRIS
GLOVSKY AND POPEO, P.C.
3580 CARMEL MOUNTAIN ROAD
SUITE 300
SAN DIEGO, CA 92130-6768

Cc: RON JANKOWSKI, PHD
DIRECTOR, RESEARCH & PRODUCT DEVELOPMENT
105 DELTA DRIVE
PITTSBURGH, PA 15232

UNITED STATES PATENT AND TRADEMARK OFFICE

Commissioner for Patents
United States Patent and Trademark Office
P.O. Box 1450
Alexandria, VA 22313-1450
www.uspto.gov

SAND & SEBOLT
AEGIS TOWER, SUITE 1100
4940 MUNSON STREET, NW
CANTON, OH 44718-3615

MAILED

NOV 04 2011

OFFICE OF PETITIONS

In re Application of :
William Mullet :
Application No. 12/614,674 : DECISION ON PETITION
Filed: November 9, 2009 : TO WITHDRAW FROM
Attorney Docket No. 1533017US1AP : RECORD

This is a decision on the Request to Withdraw as attorney or agent of record under 37 CFR §§ 1.36(b) or 10.40 filed October 19, 2011.

The request is **NOT APPROVED**.

The request cannot be approved because the requested change in the correspondence address is improper.

The Office will only accept correspondence address changes to the most current address information provided for the assignee of the entire interest *that properly became of record under 37 CFR 3.71,* or, if no assignee of the entire interest has properly been made of record, the most current address information provided for the first named inventor. 37 CFR 3.71(c) states:

> *An assignee becomes of record either in a national patent application or a reexamination proceeding by filing a statement in compliance with § 3.73(b) that is signed by a party who is authorized to act on behalf of the assignee.*

Therefore, as there is currently no Statement under 37 CFR 3.73(b) with the current assignee information of record in the instant application, the Office cannot change the correspondence address to the address on the Request to Withdraw at this present time[1].

[1] The Office will no longer change the correspondence address to that of a new practitioner unless the Request is accompanied by a power of attorney to a new practitioner (e.g., Form PTO/SB/82).

In view of the above, all future communications from the Office will continue to be directed to the above-listed address unless otherwise notified by the applicant.

There is an Office action mailed on October 14, 2011, that requires a reply from applicant.

Telephone inquiries concerning this decision should be directed to the undersigned at (571) 272-3226.

Andrea Smith
Petitions Examiner
Office of Petitions

cc: Provia Door, Inc.
2150 State Route 39
Sugarcreek, OH 44681-0460

UNITED STATES PATENT AND TRADEMARK OFFICE

Commissioner for Patents
United States Patent and Trademark Office
P.O. Box 1450
Alexandria, VA 22313-1450
www.uspto.gov

SAND & SEBOLT
AEGIS TOWER, SUITE 1100
4940 MUNSON STREET, NW
CANTON, OH 44718-3615

MAILED
JAN 04 2012
OFFICE OF PETITIONS

In re Application of :
William Mullet :
Application No. 12/614,674 : DECISION ON PETITION
Filed: November 9, 2009 : TO WITHDRAW FROM
Attorney Docket No. 1533017US1AP : RECORD

This is a decision on the Statement under 37 CFR 3.73(b) filed on November 23, 2011, which is being treated as a renewed Request to Withdraw as attorney or agent of record under 37 CFR §§ 1.36(b) or 10.40.

The request is **APPROVED**.

Since the original request, filed on October 19, 2011, was signed by Joseph A. Sebolt on behalf of himself and all attorneys/agents associated with Customer Number 000027542, then Joseph Sebolt and all the attorneys/agents associated with Customer Number 000027542 have been withdrawn.

Applicant is reminded that there are no attorneys/agents of record at this time.

There is an outstanding Office action mailed on October 14, 2011, that requires a reply from the applicant.

All future communications from the Office will be directed to the address listed below until otherwise properly notified by the applicant.

Telephone inquiries concerning this decision should be directed to the undersigned at (571) 272-3226.

Andrea Smith
Petitions Examiner
Office of Petitions

cc: Provia Door, Inc.
2150 State Route 39
Sugarcreek, OH 44681-0460

UNITED STATES PATENT AND TRADEMARK OFFICE

UNITED STATES DEPARTMENT OF COMMERCE
United States Patent and Trademark Office
Address: COMMISSIONER FOR PATENTS
P.O. Box 1450
Alexandria, Virginia 22313-1450
www.uspto.gov

APPLICATION NUMBER	FILING OR 371(C) DATE	FIRST NAMED APPLICANT	ATTY. DOCKET NO./TITLE
12/614,674	11/09/2009	William Mullet	1533017US1AP

CONFIRMATION NO. 9047

27542
SAND & SEBOLT
AEGIS TOWER, SUITE 1100
4940 MUNSON STREET, NW
CANTON, OH 44718-3615

POWER OF ATTORNEY NOTICE

OC000000051567588

Date Mailed: 12/19/2011

NOTICE REGARDING CHANGE OF POWER OF ATTORNEY

This is in response to the Power of Attorney filed 10/19/2011.

- The withdrawal as attorney in this application has been accepted. Future correspondence will be mailed to the new address of record. 37 CFR 1.33.

/amsmith/

Office of Data Management, Application Assistance Unit (571) 272-4000, or (571) 272-4200, or 1-888-786-0101

UNITED STATES PATENT AND TRADEMARK OFFICE

Commissioner for Patents
United States Patent and Trademark Office
P.O. Box 1450
Alexandria, VA 22313-1450
www.uspto.gov

BROUSE MCDOWELL LPA
388 SOUTH MAIN STREET
SUITE 500
AKRON OH 44311

MAILED
OCT 11 2011
OFFICE OF PETITIONS

In re Application of :
Iqbal Husain et al. :
Application No. 12/614,732 :
Filed: November 9, 2009 :
Attorney Docket No. **20211.49843** :

DECISION ON PETITION
TO WITHDRAW
FROM RECORD

This is a decision on the request to withdraw as attorney of record under 37 CFR § 1.36(b), filed September 30, 2010.

The request is **NOT APPROVED**.

The request cannot be approved because the Office no longer accept address changes to a new practitioner/customer number or law firm filed with a request, absent the filing of a power of attorney to the new representative.

The Office will only accept correspondence address changes to the most current address information provided for the assignee of the entire interest *who properly became of record under 37 CFR 3.71,* or, if no assignee of the entire interest has properly been made of record, the most current address information provided for the first named inventor. 37 CFR 3.71(c) states:

> *An assignee becomes of record either in a national patent application or a reexamination proceeding by filing a statement in compliance with § 3.73(b) that is signed by a party who is authorized to act on behalf of the assignee.*

The assignee must establish its ownership of the patent to the satisfaction of the Director. In this regard, the statement under 37 CFR 3.73(b) must have either: (i) documentary evidence of a chain of title from the original owner to the assignee (*e.g.*, copy of an executed assignment), and a statement affirming that the documentary evidence of the chain of title from the original owner to the assignee was or concurrently is being submitted for recordation pursuant to § 3.11; or (ii) a statement specifying where documentary evidence of a chain

of title from the original owner to the assignee is recorded in the assignment records of the Office (*e.g.*, reel and frame number).

All future communications from the Office will continue to be directed to the above-listed address until otherwise notified by applicant.

Telephone inquires concerning this decision should be directed to the undersigned at (571) 272-4584.

/JoAnne Burke/
JoAnne Burke
Petitions Examiner
Office of Petitions

Doc Code: PPH.PCT.652
Document Description: Petition to make special under PCT-Patent Pros Hwy

PTO/SB/20PCT-KR (06-10)
Approved for use through 01/31/2012. OMB 0651-0058
U.S. Patent and Trademark Office; U. S. DEPARTMENT OF COMMERCE
Under the Paperwork Reduction Act of 1995, no persons are required to respond to a collection of information unless it displays a valid OMB control number.

REQUEST FOR PARTICIPATION IN THE PATENT COOPERATION TREATY - PATENT PROSECUTION HIGHWAY (PCT-PPH) PILOT PROGRAM BETWEEN THE KOREAN INTELLECTUAL PROPERTY OFFICE (KIPO) AND THE USPTO

Application No:	12/614,734	Filing date:	November 9, 2009
First Named Inventor:	Matthew L. Keiser		
Title of the Invention:	MULTIPLANAR BONE ANCHOR SYSTEM		

THIS REQUEST FOR PARTICIPATION IN THE PCT-PPH PILOT PROGRAM ALONG WITH THE REQUIRED DOCUMENTS MUST BE SUBMITTED VIA EFS-WEB. INFORMATION REGARDING EFS-WEB IS AVAILABLE AT HTTP://WWW.USPTO.GOV/EBC/EFS_HELP.HTML

APPLICANT HEREBY REQUESTS PARTICIPATION IN THE PCT-PPH PROGRAM AND PETITIONS TO MAKE THE ABOVE-IDENTIFIED APPLICATION SPECIAL UNDER THE PCT-PPH PROGRAM.

The above-identified application is (1) a national stage entry of the corresponding PCT application, or (2) a national stage entry of another PCT application which claims priority to the corresponding PCT application, or (3) a national application that claims domestic/ foreign priority to the corresponding PCT application, or (4) a national application which forms the basis for the priority claim in the corresponding PCT application, or (5) a continuing application of a U.S. application that satisfies one of (1) to (4) above, or (6) a U.S. application that claims domestic benefit to a U.S. provisional application which forms the basis for the priority claim in the corresponding PCT application.

The corresponding PCT application number(s) is/are: PCT/US/2010/054453

The international filing date of the corresponding PCT application(s) is/are:
28 October 2010

I. List of Required Documents:

a. **A copy of the latest international work product (WO/ISA, WO/IPEA, or IPER) in the above–identified corresponding PCT application(s)**

☑ Is attached.

☐ Is not attached because the document is already in the U.S. application.

b. **A copy of all claims which were indicated as having novelty, inventive step and industrial applicability in the above-identified corresponding PCT application(s).**

☐ Is attached.

☑ Is not attached because the document is already in the U.S. application.

c. **English translations of the documents in a. and b. above are attached (if the documents are not in the English language). A statement that the English translation is accurate is attached for the document in b. above.**

This collection of information is required by 35 U.S.C. 119, 37 CFR 1.55, and 37 CFR 1.102(d). The information is required to obtain or retain a benefit by the public, which is to file (and by the USPTO to process) an application. Confidentiality is governed by 35 U.S.C. 122 and 37 CFR 1.11 and 1.14. This collection is estimated to take 2 hours to complete, including gathering, preparing, and submitting the completed application form to the USPTO. Time will vary depending upon the individual case. Any comments on the amount of time you require to complete this form and/or suggestions for reducing this burden should be sent to the Chief Information Officer, U.S. Patent and Trademark Office, U.S. Department of Commerce, P.O. Box 1450, Alexandria, VA 22313-1450. DO NOT SEND FEES OR COMPLETED FORMS TO THIS ADDRESS.

PTO/SB/20PCT-KR (06-10)
Approved for use through 01/31/2012. OMB 0651-0058
U.S.Patent and Trademark Office; U.S. DEPARTMENT OF COMMERCE
Under the Paperwork Reduction Act of 1995, no persons are required to respond to a collection of information unless it displays a valid OMB control number.

REQUEST FOR PARTICIPATION IN THE PCT-PPH PILOT PROGRAM BETWEEN THE KIPO AND THE USPTO

(continued)

Application No.:	12/614,734
First Named Inventor:	Matthew L. Keiser

d. **(1) An information disclosure statement listing the documents cited in the international work products (ISR, WO/ISA, WO/IPEA, IPER) of the corresponding PCT application.**

☑ Is attached

☐ Has already been filed in the above-identified U.S. application on _____

(2) Copies of all documents (except) for U.S. patents or U.S. patent application publications)

☑ Are attached.

☐ Have already been filed in the above-identified U.S. application on _____

II. Claims Correspondence Table:

Claims in US Application	Patentable Claims in the corresponding PCT Application	Explanation regarding the correspondence
1-20	1-20	Same

III. All the claims in the US application sufficiently correspond to the patentable claims in the corresponding PCT application.

Signature /Erica K. Schaefer/	Date July 12, 2011
Name (Print/Typed) Erica K. Schaefer	Registration Number 55,861

Privacy Act Statement

The **Privacy Act of 1974 (P.L. 93-579)** requires that you be given certain information in connection with your submission of the attached form related to a patent application or patent. Accordingly, pursuant to the requirements of the Act, please be advised that: (1) the general authority for the collection of this information is 35 U.S.C. 2(b)(2); (2) furnishing of the information solicited is voluntary; and (3) the principal purpose for which the information is used by the U.S. Patent and Trademark Office is to process and/or examine your submission related to a patent application or patent. If you do not furnish the requested information, the U.S. Patent and Trademark Office may not be able to process and/or examine your submission, which may result in termination of proceedings or abandonment of the application or expiration of the patent.

The information provided by you in this form will be subject to the following routine uses:

1. The information on this form will be treated confidentially to the extent allowed under the Freedom of Information Act (5 U.S.C. 552) and the Privacy Act (5 U.S.C 552a). Records from this system of records may be disclosed to the Department of Justice to determine whether disclosure of these records is required by the Freedom of Information Act.
2. A record from this system of records may be disclosed, as a routine use, in the course of presenting evidence to a court, magistrate, or administrative tribunal, including disclosures to opposing counsel in the course of settlement negotiations.
3. A record in this system of records may be disclosed, as a routine use, to a Member of Congress submitting a request involving an individual, to whom the record pertains, when the individual has requested assistance from the Member with respect to the subject matter of the record.
4. A record in this system of records may be disclosed, as a routine use, to a contractor of the Agency having need for the information in order to perform a contract. Recipients of information shall be required to comply with the requirements of the Privacy Act of 1974, as amended, pursuant to 5 U.S.C. 552a(m).
5. A record related to an International Application filed under the Patent Cooperation Treaty in this system of records may be disclosed, as a routine use, to the International Bureau of the World Intellectual Property Organization, pursuant to the Patent Cooperation Treaty.
6. A record in this system of records may be disclosed, as a routine use, to another federal agency for purposes of National Security review (35 U.S.C. 181) and for review pursuant to the Atomic Energy Act (42 U.S.C. 218(c)).
7. A record from this system of records may be disclosed, as a routine use, to the Administrator, General Services, or his/her designee, during an inspection of records conducted by GSA as part of that agency's responsibility to recommend improvements in records management practices and programs, under authority of 44 U.S.C. 2904 and 2906. Such disclosure shall be made in accordance with the GSA regulations governing inspection of records for this purpose, and any other relevant (*i.e.*, GSA or Commerce) directive. Such disclosure shall not be used to make determinations about individuals.
8. A record from this system of records may be disclosed, as a routine use, to the public after either publication of the application pursuant to 35 U.S.C. 122(b) or issuance of a patent pursuant to 35 U.S.C. 151. Further, a record may be disclosed, subject to the limitations of 37 CFR 1.14, as a routine use, to the public if the record was filed in an application which became abandoned or in which the proceedings were terminated and which application is referenced by either a published application, an application open to public inspection or an issued patent.
9. A record from this system of records may be disclosed, as a routine use, to a Federal, State, or local law enforcement agency, if the USPTO becomes aware of a violation or potential violation of law or regulation.

UNITED STATES PATENT AND TRADEMARK OFFICE

UNITED STATES DEPARTMENT OF COMMERCE
United States Patent and Trademark Office
Address: COMMISSIONER FOR PATENTS
P.O. Box 1450
Alexandria, Virginia 22313-1450
www.uspto.gov

APPLICATION NO.	FILING DATE	FIRST NAMED INVENTOR	ATTORNEY DOCKET NO.	CONFIRMATION NO.
12/614,734	11/09/2009	MATTHEW L. KEISER	5490E-000781/US	9143

27572 7590 07/19/2011

HARNESS, DICKEY & PIERCE, P.L.C.
P.O. BOX 828
BLOOMFIELD HILLS, MI 48303

EXAMINER	
SPATAFORE, PAUL	

ART UNIT	PAPER NUMBER
3733	

MAIL DATE	DELIVERY MODE
07/19/2011	PAPER

Please find below and/or attached an Office communication concerning this application or proceeding.

The time period for reply, if any, is set in the attached communication.

UNITED STATES PATENT AND TRADEMARK OFFICE

Commissioner for Patents
United States Patent and Trademark Office
P.O. Box 1450
Alexandria, VA 22313-1450
www.uspto.gov

HARNESS, DICKEY & PIERCE, P.L.C.
P.O. BOX 828
BLOOMFIELD HILLS MI 48303

In re Application of: KEISER, MATTHEW L. Serial No.: 12/614734 Filed: November 9, 2009 Attorney Docket No. : 5490E-000781/US Title: MULTIPLANAR BONE ANCHOR SYSTEM	: DECISION ON A REQUEST TO : PARTICIPATE IN PCT/PATENT : PROSECUTION HIGHWAY : PROGRAM AND PETITION : TO MAKE SPECIAL UNDER : CFR 1.102(a)

This is a decision on the request to participate in the Patent Prosecution Highway (PPH) program and the petition under 37 CFR 1.102(a), filed July 12, 2011 to make the above-identified application special.

The request and petition are **dismissed.**

A grantable request to participate in the PPH pilot program and petition to make special require:

(1) The U.S. application must validly claim priority under 35 U.S.C. 119(a) to one or more PCT applications filed in the JPO, EPO, KIPO, or USPTO;
(2) Applicant must submit a copy of the allowable/patentable claim(s) from the PCT application(s) latest international work product (the written opinion or the IPER) along with an English translation thereof and a statement that the English translation is accurate;
(3) All the claims in the U.S. application must sufficiently correspond or be amended to sufficiently correspond to the allowable/patentable claim(s) in the PCT application(s);
(4) Examination of the U.S. application has not begun;
(5) Applicant must submit a copy of the latest international work product from the PCT application containing the allowable/patentable claim(s) along with an English translation thereof and a statement that the English translation is accurate; and
(6) Applicant must submit an IDS listing the documents cited by the PCT examiner in the international work product along with copies of documents except U.S. patents or U.S. patent application publications.

The request to participate in the PPH program and petition failed to meet conditions Item #2 and Item #3 above.

The request to participate in the PPH program and petition failed to include a copy of the PCT allowed claims. Applicant indicates in the petition that a copy of allowable claims from the PCT application is not attached because the document is already in the U.S. application. The record indicates, however, that the only claims submitted are those pending examination in the U.S. application, filed on November 9, 2009. Given this, it also cannot be verified that the pending U.S. claims all correspond to the allowable claims in the PCT application. Even assuming the applicant is correct in asserting that the U.S. application claims 1-20 are identical to the allowable PCT claims (which will satisfy Item #3), the applicant still needs to submit a copy of the allowable claims from the PCT application for review.

The applicant is encouraged to cite and submit all relevant prior art references, if any, to facilitate examination in this application.

Applicant is given a time period of **ONE MONTH or THIRTY DAYS**, whichever is longer, from the mailing date of this decision to correct the deficiencies. **NO EXTENSION OF TIME UNDER 37 CFR 1.136 IS PERMITTED.** If the deficiencies are not corrected with the time period given, the application will await action in its regular turn. Response must be filed via EFS-Web.

Telephone inquiries concerning this decision should be directed to Henry C. Yuen at 571-272-4856.

Petition is **dismissed**.

/Henry C. Yuen/

Henry C. Yuen, Special Programs Examiner
Technology Center 3700 – Mechanical Engineering,
Manufacturing and Products
571-272-4856

PATENT

IN THE UNITED STATES PATENT AND TRADEMARK OFFICE

Application No.:	12/614,734
Confirmation No.:	9143
Filing Date:	November 9, 2009
Applicants:	Matthew L. Keiser et al.
Group Art Unit:	3733
Examiner:	Paul Spatafore
Title:	MULTIPLANAR BONE ANCHOR SYSTEM
Attorney Docket:	5490E-000781/US

Commissioner for Patents
P.O. Box 1450
Alexandria, Virginia 22313-1450

RESPONSE TO DECISION ON REQUEST TO PARTICIPATE IN PCT/PATENT PROSECUTION HIGHWAY PROGRAM AND PETITION TO MAKE SPECIAL UNDER 37 CFR 1.102(a)

Sir:

Initially, Applicants thank Examiner Henry C. Yuen for discussing the Decision with Applicants' representative on July 26, 2011. During this discussion, Examiner Henry C. Yuen indicated that Applicants needed to submit a copy of the claims as filed in the PCT application. Accordingly, attached herewith is a copy of Claims 1-20 as filed in the PCT application. Claims 1-20 as filed in the PCT application were indicated as being allowable by KIPO. As indicated in the Claims Correspondence Table previously submitted, Claims 1-20 of the PCT application are the same as Claims 1-20 pending in

the above-referenced US application. Accordingly, Applicants respectfully submit that Items #2 and #3 have been satisfied.

CONCLUSION

It is believed that all of the deficiencies related to the request for participation in the PCT/PPH program have been addressed. Applicants therefore respectfully request that the petition for participation in the PCT/PPH program be granted. If the Examiner believes that personal communication will expedite prosecution of this application, the Examiner is invited to telephone the undersigned at (248) 641-1600.

Respectfully submitted,

Dated: July 26, 2011

By: /Erica K. Schaefer/
STEPHEN T. OLSON,
Reg. No. 36,626
ERICA K. SCHAEFER ,
Reg. No. 55,861

HARNESS, DICKEY & PIERCE, P.L.C.
P.O. Box 828
Bloomfield Hills, Michigan 48303
(248) 641-1600

STO/EKS

16200499.1

CLAIMS

What is claimed is:

1. A multiplanar bone anchor system for a fixation procedure comprising:

a bone fastener including a head and a second end adapted to engage an anatomy, the bone fastener extending along a longitudinal axis;

a coupling arrangement coupled to the head of the bone fastener so that the bone fastener is rotatable and pivotable about the longitudinal axis to define a first plane of motion; and

a saddle coupled to the coupling arrangement, the saddle movable relative to at least one of the bone fastener and the coupling arrangement to define a second plane of motion.

2. The system of Claim 1, wherein the saddle further comprises:

a first portion coupled to the coupling arrangement; and

a second portion coupled to the first portion, the second portion movable relative to the first portion to define a third plane of motion.

3. The system of Claim 2, wherein the second portion is coupled to the first portion by a retaining clip, a retaining ring, a dovetail connection or combinations thereof.

4. The system of Claim 1, wherein the saddle includes at least one rail and the coupling arrangement includes at least one guide, and the at least one rail is slidably coupled to the at least one guide to define the second plane of motion.

5. The system of Claim 1, further comprising a lock ring coupled to the head of the bone fastener and at least one of the coupling arrangement and the saddle, the lock ring configured to receive a force to lock the position of the bone fastener relative to the saddle.

6. The system of Claim 1, wherein the bone fastener comprises a pedicle screw.

7. The system of Claim 1, wherein the head of the bone fastener defines a channel, and the coupling arrangement further comprises a connecting arm that defines a coupling portion operable to engage the channel to rotatably couple the connecting arm to the bone fastener.

8. The system of Claim 1, wherein the coupling arrangement further comprises a ring coupled about the head of the bone fastener, the ring having at least one wing operable to rotatably couple the ring to the saddle.

9. The system of Claim 8, further comprising:

a connecting arm coupled to the saddle that defines a bearing surface, the at least one wing cooperating with the bearing surface to enable the ring to rotate relative to the saddle.

10. A multiplanar bone anchor system for a fixation procedure comprising:

a bone fastener including a head and a second end adapted to engage an anatomy, the bone fastener extending along a longitudinal axis;

a coupling arrangement coupled to the head of the bone fastener; and

a saddle that includes a first portion and a second portion, the first portion movable relative to the second portion along a first axis, the first axis being transverse to the longitudinal axis of the bone fastener, the second portion coupled to the coupling arrangement such that the bone fastener is pivotable relative to the saddle about the head of the bone fastener.

11. The system of Claim 10, wherein the first portion includes at least one guide and the second portion includes at least one rail, and the at least one guide of the first portion is slidably coupled to the at least one rail of the second portion to enable the first portion to move relative to the second portion.

12. The system of Claim 10, wherein the saddle further comprises a third portion that includes at least one guide opposite at least one rail, and the at least one guide of the first portion is slidably coupled to the at least one rail of the third portion so that the first portion is movable relative to the third portion and the at least one rail of the second portion is slidably coupled to the at least one guide of the third portion so that the third portion is movable relative to the second portion.

13. The system of Claim 11, wherein the coupling arrangement further comprises a ring that includes at least one wing, the ring coupled about at least a portion of the head of the bone fastener.

14. The system of Claim 13, wherein the coupling bore of the second portion further comprises a bearing surface, and the at least one wing of the ring is coupled to the bearing surface to enable the bone fastener to rotate relative to the second portion.

15. The system of Claim 13, wherein the coupling arrangement further comprises a connecting arm, and the at least one wing of the ring couples the ring to the connecting arm so that the ring rotates with the connecting arm.

16. The system of Claim 14, wherein the at least one wing includes at least one taper, and the at least one taper cooperates with the bearing surface to enable the bone fastener to pivot relative to the head of the bone fastener.

17. The system of Claim 10, wherein the second portion defines a bore, and the system further comprises:

a lock ring coupled to the head of the bone fastener and extending at least partially through the bore of the second portion.

18. The system of Claim 17, wherein at least a portion of the lock ring cooperates with the first portion to limit the movement of the first portion relative to the second portion.

19. A multiplanar bone anchor system for a fixation procedure comprising:

a bone fastener including a head and a second end adapted to engage an anatomy, the bone fastener defining a longitudinal axis;

a ring coupled about the head of the bone fastener, the ring including at least one wing;

a lock ring having a distal end coupled to the head of the bone fastener; and

a saddle including a first portion and a second portion, the first portion of the saddle being coupled to the second portion of the saddle so as to be movable relative to the second portion, the second portion of the saddle coupled about the head of the bone fastener, the ring and at least a portion of the lock ring;

wherein the at least one wing of the ring cooperates with the lock ring and the second portion of the saddle to enable the bone fastener to pivot about the head of the bone fastener, and the at least one wing cooperates with the second portion to enable the bone fastener to rotate about the longitudinal axis.

20. The system of Claim 19, wherein the distal end of the lock ring includes at least one cut-out that cooperates with the at least one wing of the ring to enable the bone fastener to pivot about the head of the bone fastener.

UNITED STATES PATENT AND TRADEMARK OFFICE

UNITED STATES DEPARTMENT OF COMMERCE
United States Patent and Trademark Office
Address: COMMISSIONER FOR PATENTS
P.O. Box 1450
Alexandria, Virginia 22313-1450
www.uspto.gov

APPLICATION NO.	FILING DATE	FIRST NAMED INVENTOR	ATTORNEY DOCKET NO.	CONFIRMATION NO.
12/614,734	11/09/2009	MATTHEW L. KEISER	5490E-000781/US	9143

27572 7590 07/29/2011

HARNESS, DICKEY & PIERCE, P.L.C.
P.O. BOX 828
BLOOMFIELD HILLS, MI 48303

EXAMINER	
SPATAFORE, PAUL	

ART UNIT	PAPER NUMBER
3733	

MAIL DATE	DELIVERY MODE
07/29/2011	PAPER

Please find below and/or attached an Office communication concerning this application or proceeding.

The time period for reply, if any, is set in the attached communication.

UNITED STATES PATENT AND TRADEMARK OFFICE

Commissioner for Patents
United States Patent and Trademark Office
P.O. Box 1450
Alexandria, VA 22313-1450
www.uspto.gov

HARNESS, DICKEY & PIERCE, P.L.C.
P.O. BOX 828
BLOOMFIELD HILLS MI 48303

In re Application of: KEISER, MATTHEW L. Serial No.: 12/614734 Filed: November 9, 2009 Attorney Docket No. : 5490E-000781/US Title: MULTIPLANAR BONE ANCHOR SYSTEM	: DECISION ON A REQUEST TO : PARTICIPATE IN PCT/PATENT : PROSECUTION HIGHWAY : PROGRAM AND PETITION : TO MAKE SPECIAL UNDER : CFR 1.102(a)

This is a decision on the request to participate in the Patent Prosecution Highway (PPH) program and the petition under 37 CFR 1.102(a), filed July 26, 2011 to make the above-identified application special.

The request and petition are **granted.**

A grantable request to participate in the PPH pilot program and petition to make special require:

(1) The U.S. application must validly claim priority under 35 U.S.C. 119(a) to one or more PCT applications filed in the JPO, EPO, KIPO, or USPTO;
(2) Applicant must submit a copy of the allowable/patentable claim(s) from the PCT application(s) latest international work product (the written opinion or the IPER) along with an English translation thereof and a statement that the English translation is accurate;
(3) All the claims in the U.S. application must sufficiently correspond or be amended to sufficiently correspond to the allowable/patentable claim(s) in the PCT application(s);
(4) Examination of the U.S. application has not begun;
(5) Applicant must submit a copy of the latest international work product from the PCT application containing the allowable/patentable claim(s) along with an English translation thereof and a statement that the English translation is accurate; and
(6) Applicant must submit an IDS listing the documents cited by the PCT examiner in the international work product along with copies of documents except U.S. patents or U.S. patent application publications.

A previous decision on the instant petition was mailed on July 19, 2011. The previous decision stated the request and petition failed to meet condition Item #2 and Item #3 above. Applicant, at the time, did not submit a copy of the PCT allowed claims with the petition. As such, it could not be verified that claims 1-20 in the U.S. application sufficiently corresponded to the allowable claims in the PCT application. Since then, Applicant have submitted a copy of claims 1-20 as filed in the PCT application and indicated as being allowable by the KIPO. On a review of these claims, it is found that they are identical to the pending claims in the U.S. application. As such, there is claim correspondence and Item #3 is satisfied as well.

In light of the PCT claims being submitted, the request to participate in the PPH program and the petition comply with the above requirements. Accordingly, the above-identified application has been accorded "special" status.

The applicant is encouraged to cite and submit all relevant prior art references, if any, to facilitate examination in this application.

Response must be filed via EFS-Web. Telephone inquiries concerning this decision should be directed to Henry C. Yuen, at 571-272-4856.

Petition is **granted**.

/Henry C. Yuen/

Henry C. Yuen
Special Programs Examiner
Technology Center 3700
Tel: 571-272-4856

UNITED STATES PATENT AND TRADEMARK OFFICE

Commissioner for Patents
United States Patent and Trademark Office
P.O. Box 1450
Alexandria, VA 22313-1450
www.uspto.gov

BRIAN ROFFE, ESQ
8170 MCCORMICK BOULEVARD, SUITE 223
SKOKIE IL 60076-2914

MAILED

NOV 17 2010

OFFICE OF PETITIONS

In re Application of :
David S. Breed :
Application No. 12/614,834 : ON PETITION
Filed: November 9, 2009
Attorney Docket No. ITI-089 :
:

This is a decision on the petition under 37 CFR 1.102(c)(1), filed March 18, 2010, to make the above-identified application special based on applicant's age as set forth in M.P.E.P. § 708.02, Section IV.

The petition is **GRANTED**.

A grantable petition to make an application special under 37 CFR 1.102(c)(1) and MPEP § 708.02, Section IV: Applicant's Age must be accompanied by evidence showing that at least one of the applicants is 65 years of age, or more, such as a birth certificate or a statement by applicant. No fee is required

The instant petition includes a statement by applicant's attorney that applicant is 65 years of age and is also accompanied with a copy of applicant's passport. Accordingly, the above-identified application has been accorded "special" status.

Further, the address given on the petition differs from the address of record. A courtesy copy of this decision is being mailed to the address given on the petition; however, the Office will mail all future correspondence solely to the address of record.

Telephone inquiries concerning this decision should be directed to the undersigned at 571-272-7751. All other inquiries concerning either the examination or status of the application should be directed to the Technology Center.

This matter is being referred to the Technology Center Art Unit 2612 for action on the merits commensurate with this decision.

Joan Olszewski
Petitions Examiner
Office of Petitions

cc: Brian Roffe, Esq.
540-B Willow Avenue
Cedarhurst, New York 11516-2211

SPE RESPONSE FOR CERTIFICATE OF CORRECTION

DATE : Apri 12 , 2012 ,

TO SPE OF : ART UNIT 2812
SUBJECT : Request for Certificate of Correction for Appl. No.: 12/614902 Patent No.: 7993962

Co f C mailroom date: 09-13-11

Please respond to this request for a certificate of correction within 7 days.

FOR IFW FILES:

Please review the requested changes/corrections as shown in the **COCIN** document(s) in the IFW application image. No new matter should be introduced, nor should the scope or meaning of the claims be changed.

Please complete the response (see below) and forward the completed response to scanning using document code **COCX**.

FOR PAPER FILES:

Please review the requested changes/corrections as shown in the attached certificate of correction. Please complete this form (see below) and forward it with the file to:

Certificates of Correction Branch (CofC)
Randolph Square – 9D10-A
Palm Location 7580

Note: _____

_____

Magdalene Talley
Certificates of Correction Branch
571-272-0423 _____

Thank You For Your Assistance

The request for issuing the above-identified correction(s) is hereby:
Note your decision on the appropriate box.

- ☒ **Approved** — **All** changes apply.
- ☐ **Approved in Part** — Specify below which changes **do not** apply.
- ☐ **Denied** — State the reasons for denial below.

Comments: _____

_____

_____

_____

_____

SPE — Art Unit 2812

UNITED STATES PATENT AND TRADEMARK OFFICE

Commissioner for Patents
United States Patent and Trademark Office
P.O. Box 1450
Alexandria, VA 22313-1450
www.uspto.gov

HOFFMANN & BARON, LLP
6900 JERICHO TURNPIKE
SYOSSET NY 11791

MAILED
JAN 10 2011
OFFICE OF PETITIONS

In re Application of :
Robert K. Yang, et al. :
Application No. 12/614,928 : NOTICE
Filed: November 9, 2009 :
Attorney Docket No. 1199-26 RCE/CON :

This is a notice regarding your request for acceptance of a fee deficiency submission under 37 CFR 1.28.

The Office no longer investigates or rejects original or reissue patent under 37 CFR 1.56. **1098 Off. Gaz. Pat. Office 502 (January 3, 1989)**. Therefore, nothing in this Notice is intended to imply that an investigation was done.

Your fee deficiency submission under 37 CFR 1.28 is hereby **ACCEPTED**.

This application is no longer entitled to small entity status. Accordingly, all future fees paid in this application must be paid at the large entity rate.

Inquiries related to this communication should be directed to the undersigned at (571) 272-2991.

/Terri Johnson/
Terri Johnson
Petitions Examiner
Office of Petitions

MAILED

APR 08 2011

PCT LEGAL ADMINISTRATION

UNITED STATES PATENT AND TRADEMARK OFFICE

Commissioner for Patents
United States Patent and Trademark Office
P.O. Box 1450
Alexandria, VA 22313-1450
www.uspto.gov

PILLSBURY WINTHROP SHAW PITTMAN, LLP
P.O. BOX 10500
MCLEAN VA 22102

In re Application of:
CAO, Yu, et al.
U.S. Application No.: 12/615,004
Filing Date: November 09, 2009
Atty's Dkt No.: 081468-0380951 P-3526.010
For: SMART SELECTION AND/OR WEIGHTING OF PARAMETERS FOR LITHOGRAPHIC PROCESS SIMULATION

DECISION ON PETITION
(37 CFR 1.78(a)(3))

This decision is issued in response to applicants' "PETITION TO ACCEPT UNINTENTIONALLY DELAYED PRIORITY CLAIM PER 37 C.F.R. § 1.78" filed 05 January 2011, which seeks to add to the present application an acceptable benefit claim to prior-filed international application PCT/US2009/049792.

For the reasons discussed below, the petition is **DISMISSED**.

The present petition was made pursuant to 37 CFR 1.78(a)(3), which applies where an applicant in a U.S. non-provisional application filed on or after November 29, 2000 seeks to add, after the expiration of the time period set forth in 37 CFR 1.78(a)(2)(ii), a domestic benefit claim under 35 U.S.C. 120 and 365(c) to a prior-filed U.S. non-provisional application or international application designating the United States. [1]

A grantable petition under 37 CFR 1.78(a)(3) must include the following:

(1) The reference to the prior-filed application required by 35 U.S.C. 120 and 37 CFR 1.78(a)(2)(i), unless previously submitted;
(2) The applicable surcharge set forth in 37 CFR 1.17; and
(3) A statement that the entire delay between the date the claim was due under 37 CFR 1.78(a)(2)(ii) and the date the claim was filed was unintentional.

The present petition fails to satisfy item (1) and (3).

With respect to element (1), as set forth in 37 CFR 1.78(a)(2)(iii), the required reference to the prior-filed application must be presented in an application data sheet (37 CFR 1.76) or in the first sentence of the specification following the title. In addition, as set forth in MPEP

[1] It is noted that the petition also cites 37 CFR 1.78(d) and 1.78(e), which are not current provisions of 37 CFR 1.78.

section 201.11(II)(A), the reference must indicate the relationship between the applications, i.e., continuation, divisional, or continuation-in-part:

> benefit claims under 35 U.S.C. 120, 121, and 365(c) must identify the prior application by application number, or by international application number and international filing date, and indicate the relationship between the applications. See 37 CFR 1.78(a)(2)(i). The relationship between the applications is whether the instant application is a continuation, divisional, or continuation-in-part of the prior nonprovisional application. An example of a proper benefit claim is "this application is a continuation of prior Application No. ---, filed ---." A benefit claim that merely states that "this application claims the benefit of Application No. ---, filed ---" does not comply with 35 U.S.C. 120 and 37 CFR 1.78(a)(2)(i), since the relationship between the applications is not stated.

The first sentence of the present application states only that the application "claims priority to PCT Application No. US09/49792, filed July 7, 2009." As indicated in the MPEP passage quoted above, such a benefit claim is not acceptable because it does not state whether the present application is a continuation, divisional, or continuation-in-part of the international application. The present petition was not accompanied by an amendment to the first sentence of the application or a supplemental application data sheet adding an acceptable reference to the prior-filed international application. Accordingly, element (1) of a grantable petition under 37 CFR 1.78(a)(3) is not satisfied on the present record.

With respect to element (3), the statement of unintentional delay here refers to the date the claim was due under 37 CFR 1.78(d)(4), a provision which does not exist in the current version of 37 CFR 1.78. The required statement must confirm that the entire delay between the date the claim was due "under 37 CFR 1.78(a)(2)(ii)" and the date the claim was filed was unintentional. Accordingly, a revised statement of unintentional delay is required. Until such revised statement is submitted, element (3) of a grantable petition is not satisfied.

Before the requested domestic benefit claim to PCT/US2009/049792 can be added to the present application, a renewed petition under 37 CFR 1.78(a)(3) is required. Any renewed petition must be accompanied by the materials needed to satisfy the outstanding requirements of a grantable petition, that is: (1) an amendment to the first line of the description (or a supplemental application data sheet) containing an acceptable reference to the prior-filed international application, as discussed above and in the MPEP; and (2) a revised statement of unintentional delay that complies with 37 CFR 1.78(a)(3)(iii).

Any further correspondence with respect to this petition may be filed electronically via EFS-Web selecting the document description "Petition for review and processing by the PCT Legal Office" or by mail addressed to Mail Stop PCT, Commissioner for Patents, Office of PCT Legal Administration, P.O. Box 1450, Alexandria, Virginia 22313-1450, with the contents of the letter marked to the attention of the Office of PCT Legal Administration.

The application is being referred to Group Art Unit 2825 for appropriate consideration.

/RichardMRoss/

Richard M. Ross
Attorney Advisor
Office of PCT Legal Administration
Telephone: (571) 272-3296

MAILED

JUN 28 2011

PCT LEGAL ADMINISTRATION

UNITED STATES PATENT AND TRADEMARK OFFICE

Commissioner for Patents
United States Patent and Trademark Office
P.O. Box 1450
Alexandria, VA 22313-1450
www.uspto.gov

PILLSBURY WINTHROP SHAW PITTMAN, LLP
P.O. BOX 10500
MCLEAN VA 22102

In re Application of:	
CAO, Yu, et al.	DECISION ON RENEWED
U.S. Application No.: 12/615,004	PETITION UNDER
Filing Date: November 09, 2009	37 CFR 1.78(a)(3) and (a)(6)
Atty's Dkt No.: 081468-0380951 P-3526.010	
For: SMART SELECTION AND/OR WEIGHTING OF PARAMETERS FOR LITHOGRAPHIC PROCESS SIMULATION	

This decision is issued in response to the "Renewed Petition For Acceptance Of Unintentionally Delayed Priority Claim Per 37 C.F.R. § 1.78(a)(3)" filed on May 18, 2011.

For the reasons discussed below, the renewed petition is **DISMISSED**.

37 CFR 1.78(a)(3) applies where an applicant in a U.S. non-provisional application filed on or after November 29, 2000 seeks to add, after the expiration of the period specified in 37 CFR 1.78(a)(2)(ii), a domestic benefit claim under 35 U.S.C. 120 and 365(c) to a prior-filed international application designating the United States. 37 CFR 1.78(a)(6) applies where an applicant in a U.S. non-provisional application filed on or after November 29, 2000 seeks to add, after the expiration of the period specified in 37 CFR 1.78(a)(5)(ii), a claim of priority under 35 U.S.C. 119(e) directed to a prior-filed U.S. provisional application. Applicants here are seeking to add to the present application an unintentionally delayed benefit claim directed to prior-filed international application PCT/US2009/049792 and prior-filed U.S. provisional application 61/078,599.[1] Accordingly, the present petition is properly considered under both 37 CFR 1.78(a)(3) and (a)(6).

A grantable petition under 37 CFR 1.78(a)(3) and 1.78(a)(6) must include:

1. the reference to the prior-filed applications required under 35 U.S.C. 120 and 119(e) and 37 CFR 1.78(a)(2)(i) and 1.78(a)(5)(i);
2. the surcharge set forth in 37 CFR 1.17(t); and
3. a statement that the entire delay between the date the claims were due under 37 CFR 1.78(a)(2)(ii) and 1.78(a)(5)(ii) and the date the claims were filed was unintentional.

[1] It is noted that applicants' original petition under 37 CFR 1.78, filed January 05, 2011, referred only to the international application, not to the U.S. provisional application.

The present renewed petition fails to satisfy elements (1) and (3).

With respect to element (1), the renewed petition was accompanied by the following proposed amendment to the first line of the description: "The present application is a continuation-in-part of prior PCT Application No. PCT/US2009/049792, filed July 7, 2009, which claims priority to U.S. Provisional Application No. 61/078,599, filed July 7, 2008, the contents of which are incorporated herein by reference in their entirety." This amendment is unacceptable as filed because it indicates that the contents of the prior-filed applications referred to therein, including U.S. provisional application 61/078,599, are "incorporated herein by reference." As set forth in MPEP section 201.06(c)(IV) (emphasis added):

> An incorporation by reference statement added after an application's filing date is not effective because no new matter can be added to an application after its filing date (see 35 U.S.C. 132(a)). **If an incorporation by reference statement is included in an amendment to the specification to add a benefit claim under 35 U.S.C. 120 after the filing date of the application, the amendment would not be proper.** When a benefit claim under 35 U.S.C. 120 is submitted after the filing of an application, the reference to the prior application cannot include an incorporation by reference statement of the prior application. See *Dart Indus. v. Banner*, 636 F.2d 684, 207 USPQ 273 (C.A.D.C. 1980).

Here, the application as filed did not include an incorporation by reference statement with respect to U.S provisional application 61/078,599; thus, the inclusion in the present proposed amendment of an incorporation by reference statement directed to such applications is improper.

Based on the above, the reference to the prior-filed applications contained in the proposed amendment filed with the present petition is not acceptable as filed. Element (1) of a grantable petition under 37 CFR 1.78(a)(3) and (a)(6) is therefore not satisfied on the present record.

With respect to element (3), the renewed petition includes a statement that "the entire delay between the date the claim was dues under 37 C.F.R. § 1.78(a)(2)(i) and the date the claim was filed was unintentional." However, because applicants are now seeking to add both the claim to the international application (under 37 CFR 1.78(a)(3)) and the claim to the provisional application (under 37 CFR 1.78(a)(6)), the required statement must confirm that "the entire delay between the date the claims were due under 37 CFR 1.78(a)(2)(ii) and 1.78(a)(5)(ii) and the date the claims were filed was unintentional." Until such revised statement is submitted, element (3) of a grantable petition under 37 CFR 1.78(a)(3) and (a)(6) is not satisfied.

Before the requested domestic benefit claims to PCT/US2009/049792 and U.S. application number 61/078,599 can be added to the present application, a second renewed petition under 37 CFR 1.78(a)(3) and (a)(6) is required. Any renewed petition must be accompanied by the materials needed to satisfy the outstanding requirements of a grantable petition, that is: (1) a revised amendment to the first line of the description (or a supplemental application data sheet) containing an acceptable reference to the prior-filed applications, as discussed above and in the MPEP; and (2) a revised statement of unintentional delay that complies with 37 CFR 1.78(a)(3)(iii) and 1.78(a)(6)(iii).

Any further correspondence with respect to this matter may be filed electronically via EFS-Web selecting the document description "Petition for review and processing by the PCT Legal Office" or by mail addressed to Mail Stop PCT, Commissioner for Patents, Office of PCT Legal Administration, P.O. Box 1450, Alexandria, Virginia 22313-1450, with the contents of the letter marked to the attention of the Office of PCT Legal Administration.

/RichardMRoss/

Richard M. Ross
Attorney Advisor
Office of PCT Legal Administration
Telephone: (571) 272-3296

UNITED STATES PATENT AND TRADEMARK OFFICE

Commissioner for Patents
United States Patent and Trademark Office
P.O. Box 1450
Alexandria, VA 22313-1450
www.uspto.gov

MAILED

SEP 20 2011

PCT LEGAL ADMINISTRATION

PILLSBURY WINTHROP SHAW PITTMAN, LLP
P.O. BOX 10500
MCLEAN VA 22102

In re Application of: CAO, Yu, et al.
U.S. Application No.: 12/615,004
Filing Date: November 09, 2009
Atty's Dkt No.: 081468-0380951 P-3526.010
For: SMART SELECTION AND/OR WEIGHTING OF PARAMETERS FOR LITHOGRAPHIC PROCESS SIMULATION

DECISION ON SECOND RENEWED PETITION UNDER 37 CFR 1.78(a)(3) AND (a)(6)

This decision is issued in response to the "Second Renewed Petition For Acceptance Of Unintentionally Delayed Priority Claim Per 37 C.F.R. § 1.78(a)(3) AND 37 C.F.R. § 1.78(a)(6)" filed on August 09, 2011. The petition seeks to add to the present application an unintentionally delayed benefit claim directed to prior-filed international application PCT/US2009/049792 and prior-filed U.S. provisional application 61/078,599.

For the reasons discussed below, the renewed petition is **GRANTED**.

As indicated in the previous decision, the present petition is properly considered under both 37 CFR 1.78(a)(3) and (a)(6), and a grantable petition under 37 CFR 1.78(a)(3) and 1.78(a)(6) must include the following:

(1) the reference required by 35 U.S.C. 120 and 119(e) and 37 CFR 1.78(a)(2)(i) and 1.78(a)(5)(i) to the prior-filed applications, unless previously submitted;
(2) the surcharge set forth in 1.17(t); and
(3) a statement that the entire delay between the date the claim was due under 37 CFR 1.78(a)(2)(ii) and 1.78(a)(5)(ii) and the date the claim was filed was unintentional.

The present renewed petition complies with the requirements for a grantable petition under 37 CFR 1.78(a)(3) and (a)(6) in that: (1) proper references to the prior-filed international and provisional application have been included in the revised amendment to the first sentence of the specification filed on August 09, 2011, as provided by 37 CFR 1.78(a)(2)(iii) and (a)(5)(i); (2) applicant has previously submitted payment of the required surcharge; and (3) the petition includes a proper statement of unintentional delay with respect to both of the claims to be added. Accordingly, having found that the petition for acceptance of the unintentionally delayed claims for the benefit of priority under 35 U.S.C. 120 and 119(e) to the prior filed applications satisfies the conditions of 37 CFR 1.78(a)(3) and (a)(6), the petition is granted.

The granting of the petition to accept the delayed benefit claim to the prior-filed applications under 37 CFR 1.78(a)(3) and (a)(6) should not be construed as meaning that this application is entitled to the benefit of the filing date of the prior-filed applications. In order for this application to be entitled to the benefit of the prior-filed application, all other requirements under 35 U.S.C. 120 and 119(e) and 37 CFR 1.78(a)(1), (a)(2), (a)(5), and (a)(6) must be met. Similarly, the fact that the Filing Receipt accompanying this decision on petition will include the prior-filed applications should not be construed as meaning that applicant is entitled to the claim for benefit of priority to the prior filed applications noted thereon. Accordingly, the examiner will, in due course, consider this benefit claim and determine whether this application is entitled to the benefit of the earlier filing date.

A corrected Filing Receipt that includes the priority claims directed to the prior-filed international and U.S. provisional applications accompanies this decision on petition.

Any questions concerning this decision may be directed to the undersigned. All other inquiries concerning either the examination procedures or status of the application should be directed to the Technology Center.

This matter is being referred to Technology Center Art Unit 2825 for appropriate consideration by the examiner of applicants' entitlement to claim benefit of priority under 35 U.S.C. 120 and 119(e) to the prior-filed international and provisional applications.

/RichardMRoss/

Richard M. Ross
Attorney Advisor
Office of PCT Legal Administration
(571) 272-3296

ATTACHMENT: Corrected Filing Receipt

UNITED STATES PATENT AND TRADEMARK OFFICE

Commissioner for Patents
United States Patent and Trademark Office
P.O. Box 1450
Alexandria, VA 22313-1450
www.uspto.gov

BROUSE MCDOWELL, LPA
388 SOUTH MAIN STREET
SUITE 500
AKRON OH 44311

MAILED
MAR 29 2011
OFFICE OF PETITIONS

In re Application of :
Demetrios Kountis et al :
Application No. 12/615,029 : DECISION ON PETITION
Filed: November 9, 2009 :
Attorney Docket No. 22488.50494 :

This is a decision on the petition under the unintentional provisions of 37 CFR 1.137(b), filed January 5, 2011, to revive the above-identified application.

The petition is **GRANTED**.

The petition satisfies the conditions for revival pursuant to the provisions of 37 CFR 1.137(b) in that (1) the reply in the form of the issue and publication fees; (2) the petition fee; and (3) the required statement of unintentional delay have been received. Accordingly, the reply to the Notice of Allowance mailed July 26, 2010, is accepted as having been unintentionally delayed.

Telephone inquiries concerning this decision should be directed to the undersigned at (571) 272-3208.

This application is being referred to the Office of Data Management to be processed into a patent.

/KOC/
Karen Creasy
Petitions Examiner
Office of Petitions

UNITED STATES PATENT AND TRADEMARK OFFICE

UNITED STATES DEPARTMENT OF COMMERCE
United States Patent and Trademark Office
Address: COMMISSIONER FOR PATENTS
P.O. Box 1450
Alexandria, Virginia 22313-1450
www.uspto.gov

APPLICATION NO.	FILING DATE	FIRST NAMED INVENTOR	ATTORNEY DOCKET NO.	CONFIRMATION NO.
12/615,064	11/09/2009	Kiyomi MURO	SUTOSH.496AUS	9797

20995 7590 08/27/2010

KNOBBE MARTENS OLSON & BEAR LLP
2040 MAIN STREET
FOURTEENTH FLOOR
IRVINE, CA 92614

EXAMINER	
CHEN, XIAOLIANG	
ART UNIT	**PAPER NUMBER**
2841	

NOTIFICATION DATE	DELIVERY MODE
08/27/2010	ELECTRONIC

Please find below and/or attached an Office communication concerning this application or proceeding.

The time period for reply, if any, is set in the attached communication.

Notice of the Office communication was sent electronically on above-indicated "Notification Date" to the following e-mail address(es):

jcartee@kmob.com
efiling@kmob.com
eOAPilot@kmob.com

UNITED STATES PATENT AND TRADEMARK OFFICE

Commissioner for Patents
United States Patent and Trademark Office
P.O. Box 1450
Alexandria, VA 22313-1450
www.uspto.gov

KNOBBE MARTENS OLSON & BEAR LLP
2040 MAIN STREET
FOURTEENTH FLOOR
IRVINE CA 92614

In re Application of
MURO et al.
Application No.: 12/615,064
Filed: 09 November 2009
Attorney Docket No.: SUTOSH.496AUS
For: ELECTRONIC APPARATUS AND FLEXIBLE PRINTED WIRING BOARD

: DECISION ON REQUEST TO
: PARTICIPATE IN THE PATENT
: PROSECUTION HIGHWAY
: PROGRAM AND PETITION
: TO MAKE SPECIAL UNDER
: 37 CFR 1.102(d)

This is a decision on the request to participate in the Patent Prosecution Highway (PPH) program and the petition under 37 CFR 1.102(d), filed 11 August 2010, to make the above-identified application special.

The request and petition are **GRANTED**.

Discussion

A grantable request to participate in the PPH pilot program and petition to make special require:

1. The U.S. application is
    a. a Paris Convention application which either
        i. validly claims priority under 35 U.S.C. 119(a) and 37 CFR 1.55 to one or more applications filed in the JPO, or
        ii. validly claims priority to a PCT application that contains no priority claims, or
    b. a national stage application under the PCT (an application which entered the national stage in the U.S. from a PCT international application after compliance with 35 U.S.C. 371), which PCT application
        i. validly claims priority to an application filed in the JPO, or
        ii. validly claims priority to a PCT application that contains no priority claims, or
        iii. contains no priority claim, or
    c. a so-called bypass application filed under 35 U.S.C. 111(a) which validly claims benefit under 35 U.S.C. 120 to a PCT application, which PCT application
        i. validly claims priority to an application filed in the JPO, or

ii. validly claims priority to a PCT application that contains no priority claims, or
iii. contains no priority claim;

2. Applicant must submit a copy of:
   a. The allowable/patentable claim(s) from the JPO application(s);
   b. An English translation of the allowable/patentable claim(s) and
   c. A statement that the English translation is accurate;
3. Applicant must:
   a. Ensure all the claims in the U.S. application must sufficiently correspond or be amended to sufficiently correspond to the allowable/patentable claim(s) in the JPO application(s) and
   b. Submit a claims correspondence table in English;
4. Examination of the U.S. application has not begun;
5. Applicant must submit:
   a. Documentation of prior office action:
      i. a copy of the office action(s) just prior to the "Decision to Grant a Patent" from each of the JPO application(s) containing the allowable/patentable claim(s) or
      ii. if the allowable/patentable claims(s) are from a "Notification of Reasons for Refusal" then the Notification of Reasons for Refusal or
      iii. if the JPO application is a first action allowance then no office action from the JPO is necessary should be indicated on the request/petition form;
   b. An English language translation of the JPO Office action from (5)(a)(i)-(ii) above
   c. A statement that the English translation is accurate;
6. Applicant must submit:
   a. An IDS listing the documents cited by the JPO examiner in the JPO office action (unless already submitted in this application)
   b. Copies of the documents except U.S. patents or U.S. patent application publications (unless already submitted in this application);

The request to participate in the PPH pilot program and petition comply with the above requirements. Accordingly, the above-identified application has been accorded "special" status.

Inquiries concerning this decision should be directed to Lee W. Young at 571-272-4549.

All other inquiries concerning the examination or status of the application is accessible in the PAIR system at http://www.uspto.gov/ebc.index.html.

This application will be forwarded to the examiner for action on the merits commensurate with this decision.

Lee W. Young
TQAS
Technology Center 2800

UNITED STATES PATENT AND TRADEMARK OFFICE

Commissioner for Patents
United States Patent and Trademark Office
P.O. Box 1450
Alexandria, VA 22313-1450
www.uspto.gov

MAILED

AUG 3 1 2010

OFFICE OF PETITIONS

SLATER & MATSIL, L.L.P.
17950 PRESTON ROAD, SUITE 1000
DALLAS TX 75252

In re Application of	:	
Changhol Koo, et al	:	DECISION REFUSING STATUS
Application No. 12/615,117	:	UNDER 37 CFR 1.47(a)
Filed: November 9, 2009	:	
Attorney Docket No. HW 08FW162	:	

This is in response to the petition under 37 CFR 1.47(a), filed January 22, 2010.

The petition is dismissed.

Rule 47 applicant is given TWO MONTHS from the mailing date of this decision to reply, correcting the below-noted deficiencies. Any reply should be entitled "Request for Reconsideration of Petition Under 37 CFR 1.47(a)," and should only address the deficiencies noted below, except that the reply may include an oath or declaration executed by the non-signing inventor. **FAILURE TO RESPOND WILL RESULT IN ABANDONMENT OF THE APPLICATION.** Any extensions of time will be governed by 37 CFR 1.136(a).

A grantable petition under 37 CFR 1.47(a) requires: (1) proof that the non-signing inventor cannot be reached or refuses to sign the oath or declaration after having been presented with the application papers (specification, claims and drawings); (2) an acceptable oath or declaration in compliance with 35 U.S.C. §§ 115 and 116; (3) the petition fee; and (4) a statement of the last known address of the non-signing inventor. Applicant lacks item (1) set forth above.

As to item (1), rule 47 applicant must demonstrate with documented evidence that an inventor refuses to join in the application after having been presented with the application papers (specification, claims, drawings and oath or declaration). There is no indication herein that joint inventor Changhol Koo was presented with a copy of the complete application papers for this application. If the joint inventor was not presented with a copy of the application papers for this application, then the joint inventor could not attest that he has "reviewed and understand the application papers" and could not execute the declaration he was requested to sign. Did the joint

inventor receive a copy of the application papers? The fact that an application may contain proprietary information does not relieve the rule 47 applicant of the responsibility to present the application papers to the joint inventors if the inventors are willing to receive the papers in order to sign the oath or declaration. Unless petitioner can show that a copy of the application papers was presented to the joint inventors , then petitioner will have to mail a copy of the complete application papers (specification, claims and drawings) to the last known address of the joint inventors , return receipt requested. A cover letter of instructions should accompany the mailing of the application papers setting a deadline or a statement that no response will constitute a refusal. This sort of ultimatum lends support to a finding of refusal by conduct. **The proof of the pertinent events should be made by a statement of someone with firsthand knowledge of the events and should include documentary evidence, such as certified mail return receipt, cover letter of instructions, telegram, etc.** *See* MPEP 409.03(d).

No evidence was provided to indicate that a copy of the complete application was presented to joint inventor Changhoi Koo at his last know address of 4008 White Porch Rd., Plano, TX 75024.

Where there is an express or oral refusal, that fact, along with the time and place of the refusal, must be stated in an affidavit or declaration **by the party to whom the refusal was made.** Where there is a written refusal, a copy of the document(s) evidencing that refusal must be made part of the affidavit or declaration.

When it is concluded by the rule 47 applicant that an omitted inventor's conduct constitutes a refusal, all facts upon which that conclusion is based should be stated in an affidavit or declaration. If there is documentary evidence to support facts alleged in the affidavit or declaration, such evidence must be submitted.

Whenever an omitted inventor gives a reason for refusing to sign the application oath or declaration, that reason should be stated in the affidavit or declaration.

Further correspondence with respect to this matter should be delivered through one of the following mediums:

By mail: Mail Stop PETITIONS
Commissioner for Patents
Post Office Box 1450
Alexandria, VA 22313-1450

By hand:	Customer Service Window Mail Stop Petitions Randolph Building 401 Dulany Street Alexandria, VA 22314
By fax:	(571) 273-8300 ATTN: Office of Petitions
By internet:	EFS-Web www.uspto.gov/ebc/efs_help.html (for help using EFS-Web call the Patent Electronic Business Center at (866) 217-9197)

Any questions concerning this matter may be directed to the undersigned at (571) 272-3208.

/KOC/
Karen Creasy
Petitions Examiner
Office of Petitions

UNITED STATES PATENT AND TRADEMARK OFFICE

Commissioner for Patents
United States Patent and Trademark Office
P.O. Box 1450
Alexandria, VA 22313-1450
www.uspto.gov

SLATER & MATSIL, L.L.P.
SLATER & MATSIL, L.L.P.
17950 PRESTON ROAD, SUITE 1000
DALLAS TX 75252

MAILED
NOV 23 2010
OFFICE OF PETITIONS

In re Application of	:	
Changhoi Koo et al	:	DECISION GRANTING STATUS
Application No. 12/615,117	:	UNDER 37 CFR 1.47(a)
Filed: November 9, 2009	:	
Attorney Docket No. HW 08FW162	:	

This is in response to the renewed petition under 37 CFR 1.47(a), filed November 2, 2010.

The petition is **GRANTED.**

Petitioner has shown that the non-signing inventor has refused to join in the filing of the above-identified application.

The application and papers have been reviewed and found in compliance with 37 CFR 1.47(a). This application is hereby accorded Rule 1.47(a) status.

As provided in 37 CFR 1.47(c), this Office will forward notice of this application's filing to the non-signing inventor at the address given in the petition. Notice of the filing of this application will also be published in the Official Gazette.

This application is being referred to Technology Center AU 2473 for appropriate action by the Examiner in the normal course of business.

Telephone inquiries regarding this decision should be directed to the undersigned at (571) 272-3208.

/KOC/
Karen Creasy
Petitions Examiner
Office of Petitions

UNITED STATES PATENT AND TRADEMARK OFFICE

Commissioner for Patents
United States Patent and Trademark Office
P. O. Box 1450
Alexandria, VA 22313-1450
www.uspto.gov

BEYER LAW GROUP LLP
P.O. BOX 1687
CUPERTINO, CA 95015-1687

MAILED

APR 04 2011

OFFICE OF PETITIONS

In re Application of :
Adya S. Tripathi et al :
Application No. 12/615,171 : ON PETITION
Filed: November 9, 2009 :
Attorney Docket No. INTERNAL COMBUSTION ENGINE CONTROL FOR IMPROVED FUEL EFFICIENCY

This is a decision on the petition, filed March 31, 2011 under 37 CFR 1.313(c)(2) to withdraw the above-identified application from issue after payment of the issue fee.

The petition is **GRANTED**.

The above-identified application is withdrawn from issue for consideration of a submission under 37 CFR 1.114 (request for continued examination). See 37 CFR 1.313(c)(2).

Petitioner is advised that the issue fee paid on March 16, 2011 in the above-identified application cannot be refunded. If, however, the above-identified application is again allowed, petitioner may request that it be applied towards the issue fee required by the new Notice of Allowance.[1]

Telephone inquiries should be directed to Irvin Dingle at (571) 272-3210.

This matter is being referred to Technology Center AU 3747 for processing of the request for continued examination under 37 CFR 1.114 and for consideration of the concurrently filed Information Disclosure Statement.

/Irvin Dingle/
Irvin Dingle
Petitions Examiner
Office of Petitions

[1] The request to apply the issue fee to the new Notice may be satisfied by completing and returning the new Issue Fee Transmittal Form PTOL-85(b), which includes the following language thereon: Commissioner for Patents is requested to apply the Issue Fee and Publication Fee (if any) or re-apply any previously paid issue fee to the application identified above. Petitioner is advised that, whether a fee is indicated as being due or not, the Issue Fee Transmittal Form **must** be completed and timely submitted to avoid abandonment. Note the language in bold text on the first page of the Notice of Allowance and Fee(s) Due (PTOL-85).

IN THE UNITED STATES PATENT AND TRADEMARK OFFICE

In re application of: TRIPATHI et al.	Attorney Docket No.: TULAP001X1C2
Application No.: 12/615,179	Examiner: Unassigned
Filed: November 9, 2009	Group: 3741
Title: INTERNAL COMBUSTION ENGINE CONTROL FOR IMPROVED FUEL EFFICIENCY	Confirmation No.: 1051

CERTIFICATE OF EFS-WEB TRANSMISSION
I hereby certify that this correspondence is being transmitted electronically through EFS-WEB to the Commissioner for Patents, P.O. Box 1450 Alexandria, VA 22313-1450 on **September 24, 2010**.

Signed: /Michelle Pascual/
Michelle Pascual

PETITION TO MAKE SPECIAL UNDER THE GREEN TECHNOLOGY PILOT PROGRAM

Commissioner for Patents
P.O. Box 1450
Alexandria, VA 22313-1450

Dear Sir:

Applicant hereby requests to participate in the Green Technology Pilot Program for the above-identified application.

By filing this petition:

☐ Applicant hereby requests early publication under 37 CFR 1.219 and the publication fee set forth in 37 CFR 1.18(d) accompanies this request. The Commissioner is hereby authorized to charge Deposit Account No. 50-4481 (Order No.:) for the amount of $300.

☒ Since this application was already published on March 4, 2010, it is believed that there is no need to request early publication under 37 CFR 1.219 nor pay the publication fee set forth in 37 CFR 1.18(d). However, if the Office determines that another publication is necessary, the Commissioner is hereby authorized to charge Deposit Account No. 50-4481 (Order No.: TULAP001X1C2) for the amount of $300.

By filing this petition, Applicant is agreeing to make an election without traverse in a telephonic interview and elect an invention that meets the eligibility requirement and the classification requirement set forth in the Federal Register notice entitled "Pilot Program for

Green Technologies Including Greenhouse Gas Reduction" that was published in the Federal Register if the Office determines that the claims are not obviously directed to a single invention.

STATEMENTS OF SPECIAL STATUS FOR THE ELIGIBILITY REQUIREMENT

The basis for the special status is that the invention claimed in the above-identified patent application is believed to materially contribute to the conservation of energy. The claimed invention relates to engine control and in particular is arranged to provide a skip fire type of engine control that can provide a significant improvement in the fuel economy of automotive engines.

REMARKS

A preliminary amendment has been submitted herewith to reduce the number of outstanding claims to no more than three (3) independent claims and twenty (20) total claims.

The application does not contain any multiple dependent claims.

Respectfully Submitted,

BEYER LAW GROUP LLP

/Steve D Beyer/
Steve D Beyer
Registration No.: 31,234

Date: September 24, 2010

P.O. Box 1687
Cupertino, CA 95015-1687
(408) 255-8001

UNITED STATES PATENT AND TRADEMARK OFFICE

UNITED STATES DEPARTMENT OF COMMERCE
United States Patent and Trademark Office
Address: COMMISSIONER FOR PATENTS
P.O. Box 1450
Alexandria, Virginia 22313-1450
www.uspto.gov

APPLICATION NO.	FILING DATE	FIRST NAMED INVENTOR	ATTORNEY DOCKET NO.	CONFIRMATION NO.
12/615,179	11/09/2009	Adya S. TRIPATHI	TULAP001X1C2	1051

58766 7590 10/04/2010

Beyer Law Group LLP
P.O. BOX 1687
Cupertino, CA 95015-1687

EXAMINER	
VO, HIEU T	
ART UNIT	PAPER NUMBER
3747	

NOTIFICATION DATE	DELIVERY MODE
10/04/2010	ELECTRONIC

Please find below and/or attached an Office communication concerning this application or proceeding.

The time period for reply, if any, is set in the attached communication.

Notice of the Office communication was sent electronically on above-indicated "Notification Date" to the following e-mail address(es):

USPTOmail@beyerlaw.com

UNITED STATES PATENT AND TRADEMARK OFFICE

Commissioner for Patents
United States Patent and Trademark Office
P.O. Box 1450
Alexandria, VA 22313-1450
www.uspto.gov

Beyer Law Group LLP
P.O. BOX 1687
Cupertino CA 95015-1687

In re Application of :
TRIPATHI, ADYA S. et al. : DECISION ON PETITION
Application No. 12/615,179 : TO MAKE SPECIAL UNDER
Filed: Nov. 9, 2009 : THE GREEN TECHNOLOGY
Attorney Docket No. TULAP001X1C2 : PILOT PROGRAM
Title of Invention: INTERNAL COMBUSTION ENGINE CONTROL FOR IMPROVED FUEL EFFICIENCY

This is a decision on the petition under 37 CFR 1.102, filed Sep. 24, 2010, to make the above-identified application special under the pilot program for applications pertaining to Green Technologies as set forth in 74 Federal Register Notice 64666 (December 8, 2009) and amended by 75 Federal Register Notice 28554 (May 21, 2010).

The petition is **DISMISSED**.

If reconsideration of this decision is desired, a petition for reconsideration must be filed within ONE (1) MONTH OR THIRTY (30) DAYS from the mail date of this decision, whichever is longer. No extension of this time limit can be granted under 37 CFR 1.136(a) or (b). The petition for reconsideration should include an exhaustive attempt to provide the lacking item(s) noted below, since, after a decision on the petition for reconsideration, no further reconsideration or review of the matter will be undertaken by the Director.

A grantable petition to make an application special under 37 CFR 1.102 and the pilot program as set forth in 74 FR 64666 must be directed to a nonprovisional application filed under 35 USC 111(a) or be a national stage entry under 35 USC 371, exclusive of any reissue applications and be filed prior to the date of the notice, December 8, 2009.

In order to qualify for special status, the following requirements must be met: 1) The application must have no more than 3 independent claims and no more than 20 total claims. 2) The application must not contain any multiple dependent claims. 3) The petition must state the basis for seeking special status, i.e., the claimed invention either: A) materially enhances the quality of the environment or B) materially contributes to: i) the discovery or development of renewable

energy resources, ii) the more efficient utilization and conservation of energy resources, or iii) greenhouse gas emission reduction. 4) If the disclosure is not clear on its face that the claimed invention materially contributes under category (A) or (B), the petition must be accompanied by a statement by the applicant, assignee, or an attorney/agent registered to practice before the Office explaining how the materiality standard is met. 5) A statement that applicant will agree to make an election without traverse in a telephonic interview if a restriction requirement is made by the examiner. 6) The petition to make special must be filed electronically. 7) The petition must be filed at least one day prior to the date that a first Office Action appears in the Patent Application Information Retrieval (PAIR) system. 8) The petition must be accompanied by a request for early publication in compliance with 37 CFR 1.219 and include the publication fee as set forth in 37 CFR 1.18(d).

The requirement for a fee for consideration of the petition to make special for applications pertaining to Green Technologies has been waived.

The petition lacks items # 4 and 8.

In regard to item 4, petitioner should note that the instant petition includes a statement identifying the basis for the special status (i.e., whether the instant invention (1) materially enhances the quality of the environment or materially contributes to (2) development of renewable energy resources or energy conservation, or (3) greenhouse gas reduction) as required by sections II and III of the notice. However, as stated in the notice, applicant must also provide a statement pertaining to the materiality standard if the application disclosure is not clear on its face as to the materiality of the basis for the special status of the invention. This petition lacks such a statement and it is not agreed that the application on its face meets that materiality standard. For example, it is not clear how the claimed the engine controller using feedback control with information indicative of requested and actual working cycle firings will materially contribute to the conservation of energy and improvement in the fuel economy.

In regard to item 8, petitioner should note that since no request in compliance with 37 CFR 1.219 has been made for the early publication of the present application and the publication fee $300.00 as set forth in 37 CFR 1.18(d) has not been received, the petition is dismissed. The applicant did not pay the required publication fee $300.

Any reconsideration of this decision should be submitted through the USPTO electronic filing system, EFS-Web, and selecting the document description of "Petition for Green Tech Pilot" on the EFS-Web screen.

Telephone inquiries concerning this decision should be directed to Henry C. Yuen at 571-272-4856.

The application is being forwarded to the Technology Center Art Unit 3749 for action in its regular turn.

/Henry C. Yuen/

Henry C. Yuen
Quality Assurance Specialist
Technology Center 3700

IN THE UNITED STATES PATENT AND TRADEMARK OFFICE

In re application of: TRIPATHI et al.	Attorney Docket No.: TULAP001X1C2
Application No.: 12/615,179	Examiner: VO, Hieu T
Filed: November 9, 2009	Group: 3747
Title: INTERNAL COMBUSTION ENGINE CONTROL FOR IMPROVED FUEL EFFICIENCY	Confirmation No.: 1051

CERTIFICATE OF EFS-WEB TRANSMISSION
I hereby certify that this correspondence is being transmitted electronically through EFS-WEB to the Commissioner for Patents, P.O. Box 1450 Alexandria, VA 22313-1450 on **October 21, 2010**.

Signed: /Michelle Pascual/
Michelle Pascual

PETITION FOR RECONSIDERATION OF PETITION TO MAKE SPECIAL UNDER THE GREEN TECHNOLOGY PILOT PROGRAM

Commissioner for Patents
P.O. Box 1450
Alexandria, VA 22313-1450

Dear Sir:

On September 24, 2010 a petition was filed to make the above-identified application special under the pilot program for applications pertaining to Green Technologies. The petition was dismissed in a decision mailed October 4, 2010. Applicant hereby requests reconsideration of the earlier petition.

The dismissal of the earlier petition indicated that the original petition lacked two items. The two items that were indicated to be missing included (a) the publication fee; and (b) a sufficient statement explaining how the materiality standard is met by the claimed invention.

Payment of Publication Fee

Although the case has already published, the publication fee was not paid. Accordingly, Applicant hereby authorizes the Commissioner to charge Deposit Account No. 50-4481 (Order No.: TULAP001X1C2) for the publication fee, which is believed to be in the amount of $300.

Statement Explaining Eligibility of Claimed Invention for Participation in Pilot Program

The basis for the special status is that the invention claimed in the above-identified patent application is believed to materially contribute to the conservation of energy resources. The claimed invention relates to engine control and in particular is arranged to provide a skip fire type of engine control that can provide a significant improvement in the fuel economy of automotive engines. For example, claim 1 is directed at a method of controlling the operation of an internal combustion engine in a skip fire operational mode. Computer simulations conducted by the assignee of the present application have suggested that the fuel efficiency of certain automotive gas engines can be improved by 20% or more using some of the skip fire operational approaches disclosed in the present application. It should be appreciated that the concept of skip fire engine control and the potential fuel economy benefits of running an engine in a skip fire operational mode have been understood for some time. However, to the undersigned's knowledge, such approaches have not attained widespread commercial acceptance. It is believed that some of the primary obstacles to widespread commercial adoption of skip fire engine control relate to vibration concerns and to the challenges of avoiding excessive undesirable vibrations while still providing good response to changes in the requested engine output.

Claim 1 specifically requires that feedback of at least one of requested and actual working cycle firings be used in the determination of the working cycles to be skipped. It is believed that the use of such feedback helps provide good and accurate responsiveness to changes in the requested engine output while facilitating smoother engine operation. It is also believed that the approaches described and claimed in the present application offer the potential of enabling more widespread adoption of skip fire engine control which has the potential to significantly improving the fuel economy of internal combustion engines. Accordingly, it is respectfully submitted that the present application should be accepted in the Green Technology Pilot Program.

If it is determined that any fees are due in connection with the filing of this request for reconsideration, including all publication fees that are required for participation in the Pilot Program, the Commissioner is hereby authorized to charge such fees to Deposit Account 50-4481 (Order No. TULAP001X1C2).

Respectfully Submitted,

BEYER LAW GROUP LLP

/Steve D Beyer/
Steve D Beyer
Registration No.: 31,234

Date: October 21, 2010

P.O. Box 1687
Cupertino, CA 95015-1687
(408) 255-8001

UNITED STATES PATENT AND TRADEMARK OFFICE

UNITED STATES DEPARTMENT OF COMMERCE
United States Patent and Trademark Office
Address: COMMISSIONER FOR PATENTS
P.O. Box 1450
Alexandria, Virginia 22313-1450
www.uspto.gov

APPLICATION NO.	FILING DATE	FIRST NAMED INVENTOR	ATTORNEY DOCKET NO.	CONFIRMATION NO.
12/615,179	11/09/2009	Adya S. TRIPATHI	TULAP001X1C2	1051

58766 7590 10/25/2010

Beyer Law Group LLP
P.O. BOX 1687
Cupertino, CA 95015-1687

EXAMINER	
VO, HIEU T	

ART UNIT	PAPER NUMBER
3747	

NOTIFICATION DATE	DELIVERY MODE
10/25/2010	ELECTRONIC

Please find below and/or attached an Office communication concerning this application or proceeding.

The time period for reply, if any, is set in the attached communication.

Notice of the Office communication was sent electronically on above-indicated "Notification Date" to the following e-mail address(es):

USPTOmail@beyerlaw.com

UNITED STATES PATENT AND TRADEMARK OFFICE

Commissioner for Patents
United States Patent and Trademark Office
P.O. Box 1450
Alexandria, VA 22313-1450
www.uspto.gov

Beyer Law Group LLP
P.O. BOX 1687
Cupertino CA 95015-1687

In re Application of	:	
TRIPATHI, ADYA S. et al.	:	DECISION ON PETITION
Application No. 12/615,179	:	TO MAKE SPECIAL UNDER
Filed: Nov. 9, 2009	:	THE GREEN TECHNOLOGY
Attorney Docket No. TULAP001X1C2	:	PILOT PROGRAM
Title of Invention: INTERNAL COMBUSTION ENGINE CONTROL FOR IMPROVED FUEL EFFICIENCY		

This is a decision on the renewed petition under 37 CFR 1.102, filed Oct. 21, 2010, to make the above-identified application special under the pilot program for applications pertaining to Green Technologies as set forth in 74 Federal Register Notice 64666 (December 8, 2009) and amended by 75 Federal Register Notice 28554 (May 21, 2010).

The petition is **granted**.

If reconsideration of this decision is desired, a petition for reconsideration must be filed within ONE (1) MONTH OR THIRTY (30) DAYS from the mail date of this decision, whichever is longer. No extension of this time limit can be granted under 37 CFR 1.136(a) or (b). The petition for reconsideration should include an exhaustive attempt to provide the lacking item(s) noted below, since, after a decision on the petition for reconsideration, no further reconsideration or review of the matter will be undertaken by the Director.

A grantable petition to make an application special under 37 CFR 1.102 and the pilot program as set forth in 74 FR 64666 must be directed to a nonprovisional application filed under 35 USC 111(a) or be a national stage entry under 35 USC 371, exclusive of any reissue applications and be filed prior to the date of the notice, December 8, 2009.

In order to qualify for special status, the following requirements must be met. 1) The application must have no more than 3 independent claims and no more than 20 total claims. 2) The application must not contain any multiple dependent claims. 3) The petition must state the basis for seeking special status, i.e., the claimed invention either: A) materially enhances the quality of the environment or B) materially contributes to: i) the discovery or development of renewable

energy resources, ii) the more efficient utilization and conservation of energy resources, or iii) greenhouse gas emission reduction. 4) If the disclosure is not clear on its face that the claimed invention materially contributes under category (A) or (B), the petition must be accompanied by a statement by the applicant, assignee, or an attorney/agent registered to practice before the Office explaining how the materiality standard is met. 5) A statement that applicant will agree to make an election without traverse in a telephonic interview if a restriction requirement is made by the examiner. 6) The petition to make special must be filed electronically. 7) The petition must be filed at least one day prior to the date that a first Office Action appears in the Patent Application Information Retrieval (PAIR) system. 8) The petition must be accompanied by a request for early publication in compliance with 37 CFR 1.219 and include the publication fee as set forth in 37 CFR 1.18(d).

The requirement for a fee for consideration of the petition to make special for applications pertaining to Green Technologies has been waived.

The instant petition complies with items 1 – 8 above. Accordingly, the above-identified application has been accorded "special" status.

Telephone inquires concerning this decision should be directed to Henry Yuen at 571-272-4856.

The application is being forwarded to the Technology Center Art Unit 3747 for action on the merits commensurate with this decision.

/Henry C. Yuen/

Henry C. Yuen
Quality Assurance Specialist
Technology Center 3700

UNITED STATES PATENT AND TRADEMARK OFFICE

UNITED STATES DEPARTMENT OF COMMERCE
United States Patent and Trademark Office
Address: COMMISSIONER FOR PATENTS
P.O. Box 1450
Alexandria, Virginia 22313-1450
www.uspto.gov

APPLICATION NO.	FILING DATE	FIRST NAMED INVENTOR	ATTORNEY DOCKET NO.	CONFIRMATION NO.
12/615,249	11/09/2009	KUO-FENG CHIANG	US24817	1191

7590 02/17/2011

EXAMINER

Altis Law Group, Inc.
ATTN: Steven Reiss
288 SOUTH MAYO AVENUE
CITY OF INDUSTRY, CA 91789

ART UNIT	PAPER NUMBER
1725	

NOTIFICATION DATE	DELIVERY MODE
02/17/2011	ELECTRONIC

DECISION GRANTING PETITION UNDER 37 CFR 1.138(d)

The declaration of express abandonment is recognized

This is in response to the petition under 37 CFR 1.138(d), requesting for a refund of any previously paid search fee and excess claims fee in the above-identified application.

The petition is granted.

The express abandonment is recognized. Any previously paid search fee and excess claims fee are hereby refunded.

Telephone inquiries should be directed to the Office of Data Management at (571) 272-4200.

Patent Publication Branch
Office of Data Management

UNITED STATES PATENT AND TRADEMARK OFFICE

Commissioner for Patents
United States Patent and Trademark Office
P.O. Box 1450
Alexandria, VA 22313-1450
www.uspto.gov

THE CALDWELL FIRM, LLC
PO BOX 59655
DEPT. SVIPGP
DALLAS TX 75229

MAILED

MAR 02 2011

OFFICE OF PETITIONS

In re Application of :
Daniel L. Owen et al :
Application No. 12/615,250 : DECISION ON PETITION
Filed: November 9, 2009 : UNDER 37 CFR 1.313(c)
Attorney Docket No. SVIPGP019G :

This is a decision on the petition under 37 CFR 1.313(c), filed March 1, 2011, to withdraw the above-identified application from issue after payment of the issue fee.

The petition is **GRANTED**.

The above-identified application is withdrawn from issue for consideration of a submission under 37 CFR 1.114 (request for continued examination). *See* 37 CFR 1.313(c)(2).

Petitioner is advised that the issue fee paid on January 31, 2011, cannot be refunded. If, however, this application is again allowed, petitioner may request that it be applied towards the issue fee required by the new Notice of Allowance.[1]

Telephone inquiries should be directed to the undersigned at (571) 272-3208.

This application is being referred to Technology Center AU 2129 for processing of the request for continued examination under 37 CFR 1.114 and for consideration of the concurrently filed IDS.

/Karen Creasy/
Karen Creasy
Petitions Examiner
Office of Petitions

[1] *The request to apply the issue fee to the new Notice may be satisfied by completing and returning the new Part B – Fee(s) Transmittal Form (along with any balance due at the time of submission). Petitioner is advised that the Issue Fee Transmittal Form must be completed and timely submitted to avoid abandonment of the application.*

UNITED STATES PATENT AND TRADEMARK OFFICE

Commissioner for Patents
United States Patent and Trademark Office
P.O. Box 1450
Alexandria, VA 22313-1450
www.uspto.gov

Decision Date : April 19,2011

In re Application of :

DIVYASIMHA HARISH

Application No : 12615275

Filed : 10-Nov-2009

Attorney Docket No : 00008.00004CON1

DECISION ON REQUEST TO WITHDRAW AS ATTORNEY/AGENTOF RECORD

This is an electronic decision on the Request to Withdraw as attorney or agent of record under 37 CFR § 1.36(b), filed April 19,2011

The request is **APPROVED.**

The request was signed by Raj Abhyanker (registration no. 45474) on behalf of all attorneys/agents associated with Customer Number 55952 . All attorneys/agents associated with Cusotmer Number 55952 have been withdrawn.

Since there are no remaining attorneys of record, all future communications from the Office will be directed to the first named inventor or assignee that has properly made itself of record pursuant to 37 CFR 3.71, with correspondence address:

Name	YPoint Capital, Inc.
Name2	
Address 1	997 Hunter Lane
Address 2	
City	Fremont
State	CA
Postal Code	94539
Country	US

As a reminder, requester is required to inform the first named inventor or assignee that has properly made itself of record pursuant to 37 CFR 3.71 of the electronically processed petition.

Telephone inquiries concerning this decision should be directed to the Patent Electronic Business Center (EBC) at 866-217-9197.

Office of Petitions

Doc Code: PET.AUTO **Document Description: Petition automatically granted by EFS-Web**	PTO/SB/83 U.S. Patent and Trademark Office Department of Commerce

Electronic Petition Request	**REQUEST FOR WITHDRAWAL AS ATTORNEY OR AGENT AND CHANGE OF CORRESPONDENCE ADDRESS**
Application Number	12615275
Filing Date	10-Nov-2009
First Named Inventor	DIVYASIMHA HARISH
Art Unit	2855
Examiner Name	MAX NOORI
Attorney Docket Number	00008.00004CON1
Title	RESISTIVE FORCE SENSING DEVICE AND METHOD WITH AN ADVANCED COMMUNICATION INTERFACE

◉ Please withdraw me as attorney or agent for the above identified patent application and the practitioners of record associated with Customer Number: 55952

The reason(s) for this request are those described in 37 CFR:

10.40(b)(4)

Certifications

☒ I/We have given reasonable notice to the client, prior to the expiration of the response period, that the practitioner(s) intend to withdraw from employment

☒ I/We have delivered to the client or a duly authorized representative of the client all papers and property (including funds) to which the client is entitled

☒ I/We have notified the client of any responses that may be due and the time frame within which the client must respond

Change the correspondence address and direct all future correspondence to the first named inventor or assignee that has properly made itself of record pursuant to 37 CFR 3.71:

Name	YPoint Capital, Inc.
Address	997 Hunter Lane
City	Fremont
State	CA
Postal Code	94539
Country	US

I am authorized to sign on behalf of myself and all withdrawing practitioners.	
Signature	/Raj Abhyanker/
Name	Raj Abhyanker
Registration Number	45474

UNITED STATES PATENT AND TRADEMARK OFFICE

UNITED STATES DEPARTMENT OF COMMERCE
United States Patent and Trademark Office
Address: COMMISSIONER FOR PATENTS
P.O. Box 1450
Alexandria, Virginia 22313-1450
www.uspto.gov

APPLICATION NO.	FILING DATE	FIRST NAMED INVENTOR	ATTORNEY DOCKET NO.	CONFIRMATION NO.
12/615,347	11/10/2009	Jos¿ Roberto Dur¿o	033794/381728	1418

826 7590 09/18/2011

ALSTON & BIRD LLP
BANK OF AMERICA PLAZA
101 SOUTH TRYON STREET, SUITE 4000
CHARLOTTE, NC 28280-4000

EXAMINER	
GEHMAN, BRYON P	

ART UNIT	PAPER NUMBER
3728	

MAIL DATE	DELIVERY MODE
09/18/2011	PAPER

Please find below and/or attached an Office communication concerning this application or proceeding.

The time period for reply, if any, is set in the attached communication.

UNITED STATES PATENT AND TRADEMARK OFFICE

Commissioner for Patents
United States Patent and Trademark Office
P.O. Box 1450
Alexandria, VA 22313-1450
www.uspto.gov

ALSTON & BIRD LLP
BANK OF AMERICA PLAZA
101 SOUTH TRYON STREET, SUITE 4000
CHARLOTTE NC 28280-4000

In re Application of	:	
DUR?O, JOS? ROBERTO	:	DECISION ON REQUEST TO
Application No. 12/615,347	:	PARTICIPATE IN PATENT
Filed: November 10, 2009	:	PCT/PROSECUTION HIGHWAY
Attorney Docket No. **033794/381728**	:	PROGRAM AND PETITION
For: BOX AND PALLET ASSEMBLY	:	TO MAKE SPECIAL UNDER
	:	37 CFR 1.102(a)

This is a decision on the request to participate in the Patent Prosecution Highway (PPH) program and the petition under 37 CFR 1.102(a), filed July 07, 2011 to make the above-identified application special.

The request and petition are granted.

A grantable request to participate in the PPH pilot program and petition to make special require:

(1) The U.S. application must validly claim priority under 35 U.S.C. 119(a) to one or more applications filed in the JPO;
(2) Applicant must submit a copy of the allowable/patentable claim(s) from the JPO/PCT application(s) along with an English translation thereof and a statement that the English translation is accurate;
(3) All the claims in the U.S. application must sufficiently correspond or be amended to sufficiently correspond to the allowable/patentable claim(s) in the JPO application(s);
(4) Examination of the U.S. application has not begun;
(5) Applicant must submit a copy of all the office actions from each of the JPO/PCT application(s) containing the allowable/patentable claim(s) along with an English translation thereof and a statement that the English translation is accurate; and
(6) Applicant must submit an IDS listing the documents cited by the JPO examiner in the JPO office action along with copies of documents except U.S. patents or U.S. patent application publications.

In light of the petition being properly submitted, the request to participate in the PPH program and the petition comply with the above requirements. Accordingly, the above-identified application has been accorded "special" status.

The applicant is encouraged to cite and submit all relevant prior art references, if any, to facilitate examination in this application. Upon completion of pre-examination processing, this application will be forwarded to an examiner for examination.

Telephone inquiries concerning this decision should be directed to Henry C. Yuen at 571-272-4485. All other inquiries concerning the examination or status of the application should be directed to Mickey Yu, SPE of Art Unit 3728, and 571-272-4562 for Class 206 and also accessible in the PAIR system at http://www.uspto.gov/ebc.index.html.

Petition is **granted**.

/Henry C. Yuen/

Henry C. Yuen, Special Programs Examiner
Technology Center 3700 – Mechanical Engineering,
Manufacturing and Products
571-272-4856

UNITED STATES PATENT AND TRADEMARK OFFICE

Commissioner for Patents
United States Patent and Trademark Office
P.O. Box 1450
Alexandria, VA 22313-1450
www.uspto.gov

OBLON, SPIVAK, MCCLELLAND
MAIER & NEUSTADT, L.L.P.
1940 DUKE STREET
ALEXANDRIA VA 22314

MAILED
MAR 28 2012
OFFICE OF PETITIONS

In re Application of
OKABE et al.
Application No.: 12/615,359
Filed: November 10, 2009
Attorney Docket No.: 350629US2
For: CLOSED CONTAINER AND LID OPENING/CLOSING SYSTEM THEREFOR

: DECISION ON REQUEST TO
: PARTICIPATE IN THE PATENT
: PROSECUTION HIGHWAY
: PROGRAM AND PETITION
: TO MAKE SPECIAL UNDER
: 37 CFR 1.102(a)

This is a decision on the request to participate in the Patent Prosecution Highway (PPH) program and the petition under 37 CFR 1.102(a), filed January 6, 2012, to make the above-identified application special.

The request and petition are **GRANTED**.

Discussion

A grantable request to participate in the PPH pilot program and petition to make special require:

1. The U.S. application is

    a. a Paris Convention application which either
        i. validly claims priority under 35 U.S.C. 119(a) and 37 CFR 1.55 to one or more applications filed in the JPO, or
        ii. validly claims priority to a PCT application that contains no priority claims, or
    b. a national stage application under the PCT (an application which entered the national stage in the U.S. from a PCT international application after compliance with 35 U.S.C. 371), which PCT application
        i. validly claims priority to an application filed in the JPO, or
        ii. validly claims priority to a PCT application that contains no priority claims, or
        iii. contains no priority claim, or

   c. a so-called bypass application filed under 35 U.S.C. 111(a) which validly claims benefit under 35 U.S.C. 120 to a PCT application, which PCT application
      i. validly claims priority to an application filed in the JPO, or
      ii. validly claims priority to a PCT application that contains no priority claims, or
      iii. contains no priority claim;
2. Applicant must submit a copy of:
   a. The allowable/patentable claim(s) from the JPO application(s);
   b. An English translation of the allowable/patentable claim(s) and
   c. A statement that the English translation is accurate;
3. Applicant must:
   a. Ensure all the claims in the U.S. application must sufficiently correspond or be amended to sufficiently correspond to the allowable/patentable claim(s) in the JPO application(s) and
   b. Submit a claims correspondence table in English;
4. Examination of the U.S. application has not begun;
5. Applicant must submit:
   a. Documentation of prior office action:
      i. a copy of the office action(s) just prior to the "Decision to Grant a Patent" from each of the JPO application(s) containing the allowable/patentable claim(s) or
      ii. if the allowable/patentable claims(s) are from a "Notification of Reasons for Refusal" then the Notification of Reasons for Refusal or
      iii. if the JPO application is a first action allowance then no office action from the JPO is necessary should be indicated on the request/petition form;
   b. An English language translation of the JPO Office action from (5)(a)(i)-(ii) above
   c. A statement that the English translation is accurate;
6. Applicant must submit:
   a. An IDS listing the documents cited by the JPO examiner in the JPO office action (unless already submitted in this application)
   b. Copies of the documents except U.S. patents or U.S. patent application publications (unless already submitted in this application);

The request to participate in the PPH pilot program and petition comply with the above requirements. Accordingly, the above-identified application has been accorded "special" status.

Inquiries concerning this decision should be directed to JoAnne Burke at 571-272-4549.

All other inquiries concerning the examination or status of the application is accessible in the PAIR system at http://www.uspto.gov/ebc.index.html.

This application will be forwarded to the examiner for action on the merits commensurate with this decision.

Andrea Smith
Petitions Examiner
Office of Petitions

UNITED STATES PATENT AND TRADEMARK OFFICE

Commissioner for Patents
United States Patent and Trademark Office
Washington, D.C. 20231
www.uspto.gov

HAMILTON, BROOK, SMITH & REYNOLDS, P.C.
530 VIRGINIA ROAD
P.O. BOX 9133
CONCORD MA 01742

MAILED

DEC 08 2011

OFFICE OF PETITIONS

In re Application of :
T.C.L. Gerhard Sollner et al. :
Application No. 12/615,397 : ON PETITION
Filed: November 10, 2009 :
Attorney Docket No. 3575.1042-001 :

This is a decision on the petition filed November 23, 2011, under 37 CFR § 1.48(a) and under 37 CFR § 1.48(a) which is treated under 37 CFR § 1.183.

The petition under 37 CFR § 1.183 is **GRANTED**.
The petition under 37 CFR § 1.48 is **GRANTED**.

Petitioner seeks waiver of the rules such that the petition under 37 CFR 1.48 may be considered in the absence of the signatures on the required supplemental declaration of the originally named inventors. The application was filed naming T.C.L. Gerhard Sollner and Michael P. Anthony and seeks under 37 CFR § 1.48(a) to amend the inventive entity by the addition of Maher Matta.

37 CFR § 1.48(a) requires that an amendment to the named inventive entity be accompanied by:

(1) a petition including a statement from *each person being added* and from each person being deleted as an inventor that the error occurred without deceptive intention on his or her part;
(2) an oath or declaration by each actual inventor or inventors as required by 37 CFR 1.63 or as permitted by 37 CFR 1.42, 1.43 or 1.47;
(3) the fee set forth in 37 CFR 1.17 (h); and
(4) the written consent of any existing assignee, if any of the originally named inventors has executed an assignment.

The declaration filed with the petition is signed by the added inventor with a statement that through error and without deceptive intent, the original application improperly set forth the inventorship. All of the original inventors have signed the supplemental declaration except joint inventor Anthony.

The petition is also accompanied by the proper petition fees and a consent of assignee however, while petitioners assert that the supplemental declaration has been forwarded to Mr. Anthony they argue that to date he has not returned an executed copy.

The supplemental declaration has been reviewed and found in compliance with 37 CFR §§ 1.67 and 1.63. In view of the foregoing evidence provided, it is concluded that waiver of the requirement that the supplemental declaration be signed by joint inventor Anthony is appropriate.

The petition bears proof that the nonprovisional application, as filed, through error and without deceptive intent, improperly set forth the inventorship, and, accordingly, this application has been corrected in compliance with 37 CFR 1.48. The inventorship of this application has been changed by the addition of Maher Matta as a joint inventor.

Petitioner is advised however that for the petition under 37 CFR 1.183, the petition fee is set at $400 and not $200 as indicated. Therefore, as authorized, petitioner's deposit account no. 08-0380 has been charged in the amount of $400 for the petition under 37 CFR 1.183 and $130 for the petition under 37 CFR 1.48.

This matter will be referred to the Office of Patent Application Processing for issuance of a corrected filing receipt, correction of the file and PTO PALM data to reflect the inventorship as corrected. Thereafter, the matter will be referred to the Publishing Division.

Telephone inquiries concerning this matter may be directed to the undersigned Petitions Attorney at (571) 272-3212.

Patricia Faison-Ball

Patricia Faison-Ball
Senior Petitions Attorney
Office of Petitions

Doc Code: PET.AUTO **Document Description: Petition automatically granted by EFS-Web**	PTO/SB/83 U.S. Patent and Trademark Office Department of Commerce

Electronic Petition Request	**REQUEST FOR WITHDRAWAL AS ATTORNEY OR AGENT AND CHANGE OF CORRESPONDENCE ADDRESS**
Application Number	12615425
Filing Date	10-Nov-2009
First Named Inventor	Timothy Sargent
Art Unit	3632
Examiner Name	ERIN SMITH
Attorney Docket Number	SARG-002
Title	Animal Head Positioning Device

◉ Please withdraw me as attorney or agent for the above identified patent application and the practitioners of record associated with Customer Number: 65215

The reason(s) for this request are those described in 37 CFR:

10.40(c)(1)(vi)

Certifications

☒ I/We have given reasonable notice to the client, prior to the expiration of the response period, that the practitioner(s) intend to withdraw from employment

☒ I/We have delivered to the client or a duly authorized representative of the client all papers and property (including funds) to which the client is entitled

☒ I/We have notified the client of any responses that may be due and the time frame within which the client must respond

Change the correspondence address and direct all future correspondence to the first named inventor or assignee that has properly made itself of record pursuant to 37 CFR 3.71:

Name	Timothy Sargent
Address	109 West Main Street South
City	Ada
State	MN
Postal Code	56510
Country	US

I am authorized to sign on behalf of myself and all withdrawing practitioners.	
Signature	/Michael S. Neustel/
Name	Michael S. Neustel
Registration Number	41221

UNITED STATES PATENT AND TRADEMARK OFFICE

Commissioner for Patents
United States Patent and Trademark Office
P.O. Box 1450
Alexandria, VA 22313-1450
www.uspto.gov

Decision Date : June 21,2011

In re Application of :

Timothy Sargent

Application No : 12615425

Filed : 10-Nov-2009

Attorney Docket No : SARG-002

DECISION ON REQUEST TO WITHDRAW AS ATTORNEY/AGENTOF RECORD

This is an electronic decision on the Request to Withdraw as attorney or agent of record under 37 CFR § 1.36(b), filed June 21,2011

The request is **APPROVED.**

The request was signed by Michael S. Neustel (registration no. 41221) on behalf of all attorneys/agents associated with Customer Number 65215 . All attorneys/agents associated with Cusotmer Number 65215 have been withdrawn.

Since there are no remaining attorneys of record, all future communications from the Office will be directed to the first named inventor or assignee that has properly made itself of record pursuant to 37 CFR 3.71, with correspondence address:

Name	Timothy Sargent
Name2	
Address 1	109 West Main Street South
Address 2	
City	Ada
State	MN
Postal Code	56510
Country	US

As a reminder, requester is required to inform the first named inventor or assignee that has properly made itself of record pursuant to 37 CFR 3.71 of the electronically processed petition.

Telephone inquiries concerning this decision should be directed to the Patent Electronic Business Center (EBC) at 866-217-9197.

Office of Petitions

Doc Code: PET.GREEN
Document Description: Petition for Green Tech Pilot

PTO/SB/420 (05-10)
Approved for use through 01/31/2011. OMB 0651-0062
U.S. Patent and Trademark Office; U. S. DEPARTMENT OF COMMERCE
Under the Paperwork Reduction Act of 1995, no persons are required to respond to a collection of information unless it displays a valid OMB control number.

PETITION TO MAKE SPECIAL UNDER THE GREEN TECHNOLOGY PILOT PROGRAM

Attorney Docket Number: HEU.101	Application Number (if known): 12/615,453	Filing date: Nov. 10, 2009

First Named Inventor: Elvin

Title: Fluid Catalytic Cracking Process Including Flue Gas Conversion Process

APPLICANT HEREBY REQUESTS TO PARTICIPATE IN THE GREEN TECHNOLOGY PILOT PROGRAM FOR THE ABOVE-IDENTIFIED APPLICATION. See Instruction Sheet on page 2.

This petition must be timely filed electronically using the USPTO electronic filing system, EFS-Web.

1. By filing this petition:

   Applicant is requesting early publication: Applicant hereby requests early publication under 37 CFR 1.219 and the publication fee set forth in 37 CFR 1.18(d) accompanies this request.

2. By filing this petition: applicant is agreeing to make an election without traverse in a telephonic interview and elect an invention that meets the eligibility requirements set forth in the notice titled "Pilot Program for Green Technologies Including Greenhouse Gas Reduction," as modified by the notice titled "Elimination of Classification Requirement in the Green Technology Pilot Program," each of which was published in the Federal Register, if the Office determines that the claims are not obviously directed to a single invention.

3. This request is accompanied by statements of special status for the eligibility requirement.

4. The application contains no more than three (3) independent claims and twenty (20) total claims.

5. The application does not contain any multiple dependent claims.

6. Other attachments: _____

Signature Theresa Camoriano	Date Oct. 5, 2010
Name (Print/Typed) Theresa F. Camoriano	Registration Number 30,038

Note: Signatures of all the inventors or assignees of record of the entire interest or their representative(s) are required in accordance with 37 CFR 1.33 and 11.18. Please see 37 CFR 1.4(d) for the form of the signature. If necessary, submit multiple forms for more than one signature, see below.*

☐ *Total of_____ forms are submitted.

The information is required to obtain or retain a benefit by the public which is to file (and by the USPTO to process) an application. Confidentiality is governed by 35 U.S.C. 122 and 37 CFR 1.11 and 1.14. This collection is estimated to take 1 hour to complete, including gathering, preparing, and submitting the completed application form to the USPTO. Time will vary depending upon the individual case. Any comments on the amount of time you require to complete this form and/or suggestions for reducing this burden, should be sent to the Chief Information Officer, U.S. Patent and Trademark Office, U.S. Department of Commerce, P.O. Box 1450, Alexandria, VA 22313-1450. DO NOT SEND FEES OR COMPLETED FORMS TO THIS ADDRESS. **SEND TO: Commissioner for Patents, P.O. Box 1450, Alexandria, VA 22313-1450.**

If you need assistance in completing the form, call 1-800-PTO-9199 and select option 2.

In the U.S. Patent and Trademark Office

U.S. Patent Application S.N. 12/615,453

Title: Fluid Catalytic Cracking Process Including Flue Gas Conversion Process

Filing Date: Nov. 10, 2009

Statement of Special Status for Greenhouse Gas Reduction

Mail Stop Petitions
Commissioner of Patents
P.O. Box 1450
Alexandria, VA 22313-1450

Dear Sir:

Applicant is requesting special status for the referenced application based on greenhouse gas reduction. As explained in the Background portion of the application, "The present invention relates to a fluid catalytic cracking process which takes advantage of a flue gas conversion plant including a Fischer-Tropsch process to reduce carbon dioxide emissions and increase the production of useful hydrocarbon products, such as diesel oil, jet fuel, and other products." So, instead of emitting carbon dioxide in the flue gas, this process converts the hydrogen and the CO into hydrocarbon products, thereby resulting in a reduction in greenhouse gas emissions.

Respectfully submitted,

Theresa Camoriano

Theresa Fritz Camoriano
Reg. No. 30,038
Camoriano and Associates
8225 Shelbyville Road
Louisville KY 40222
phone 502-423-9850
fax 502-426-1167

UNITED STATES PATENT AND TRADEMARK OFFICE

UNITED STATES DEPARTMENT OF COMMERCE
United States Patent and Trademark Office
Address: COMMISSIONER FOR PATENTS
P.O. Box 1450
Alexandria, Virginia 22313-1450
www.uspto.gov

APPLICATION NO.	FILING DATE	FIRST NAMED INVENTOR	ATTORNEY DOCKET NO.	CONFIRMATION NO.
12/615,453	11/10/2009	Frank J. Elvin	HEU.101	1636

24062 7590 10/21/2010

CAMORIANO & ASSOCIATES
8225 SHELBYVILLE ROAD
LOUISVILLE, KY 40222

EXAMINER	
ART UNIT	PAPER NUMBER
1797	

MAIL DATE	DELIVERY MODE
10/21/2010	PAPER

Please find below and/or attached an Office communication concerning this application or proceeding.

The time period for reply, if any, is set in the attached communication.

UNITED STATES PATENT AND TRADEMARK OFFICE

Commissioner for Patents
United States Patent and Trademark Office
P.O. Box 1450
Alexandria, VA 22313-1450
www.uspto.gov

CAMORIANO & ASSOCIATES
8225 SHELBYVILLE ROAD
LOUISVILLE KY 40222

OCT 21 2010

In re Application of :
Frank Elvin et al. : DECISION ON PETITION
Application No. 12/615,453 : TO MAKE SPECIAL UNDER
Filed: November 10, 2009 : THE GREEN TECHNOLOGY
Attorney Docket No. HEU.101 : PILOT PROGRAM

This is a decision on the petition under 37 CFR 1.102, filed October 05, 2010, to make the above-identified application special under the pilot program for applications pertaining to Green Technologies as set forth 74 Federal Register Notice 64666 (December 8, 2009).

The petition is **GRANTED**.

A grantable petition to make an application special under 37 CFR 1.102 and the pilot program as set forth in 74 FR 64666 must be directed to a nonprovisional application filed under 35 USC 111(a) or be a national stage entry under 35 USC 371, exclusive of any reissue applications and be filed prior to the date of the notice, December 8, 2009.

In order to qualify for special status, the following requirements must be met. 1) The application must have no more than 3 independent claims and no more than 20 total claims. 2) The application must not contain any multiple dependent claims. 3) The petition must state the basis for seeking special status, i.e., the claimed invention either: A) materially enhances the quality of the environment or B) materially contributes to: i) the discovery or development of renewable energy resources, ii) the more efficient utilization and conservation of energy resources, or iii) greenhouse gas emission reduction. 4) If the disclosure is not clear on its face that the claimed invention materially contributes under category (A) or (B), the petition must be accompanied by a statement by the applicant, assignee, or an attorney/agent registered to practice before the Office explaining how the materiality standard is met. 5) A statement that applicant will agree to make an election without traverse in a telephonic interview if a restriction requirement is made by the examiner. 6) The petition to make special must be filed electronically. 7) The petition must be filed at least one day prior to the date that a first Office Action appears in the Patent Application Information Retrieval (PAIR) system. 8) The petition must be accompanied by a request for early publication in compliance with 37 CFR 1.219 and include the publication fee as set forth in 37 CFR 1.18(d).

The requirement for a fee for consideration of the petition to make special for applications pertaining to Green Technologies has been waived.

The instant petition complies with items 1 – 8 above. Accordingly, the above-identified application has been accorded "special" status.

Telephone inquires concerning this decision should be directed to Blaine Copenheaver at 571-272-1156.

The application is being forwarded to the Technology Center Art Unit 1797 for action on the merits commensurate with this decision.

/Blaine Copenheaver/

Blaine Copenheaver
Quality Assurance Specialist
Technology Center 1700

UNITED STATES PATENT AND TRADEMARK OFFICE

UNITED STATES DEPARTMENT OF COMMERCE
United States Patent and Trademark Office
Address: COMMISSIONER FOR PATENTS
P.O. Box 1450
Alexandria, Virginia 22313-1450
www.uspto.gov

APPLICATION NO.	FILING DATE	FIRST NAMED INVENTOR	ATTORNEY DOCKET NO.	CONFIRMATION NO.
12/615,471	11/10/2009	Tetsuo Saito	6639P829	1673

8791 7590 10/14/2010

BLAKELY SOKOLOFF TAYLOR & ZAFMAN LLP
1279 OAKMEAD PARKWAY
SUNNYVALE, CA 94085-4040

EXAMINER	
VONCH, JEFFREY A	

ART UNIT	PAPER NUMBER
1788	

MAIL DATE	DELIVERY MODE
10/14/2010	PAPER

Please find below and/or attached an Office communication concerning this application or proceeding.

The time period for reply, if any, is set in the attached communication.

UNITED STATES PATENT AND TRADEMARK OFFICE

Commissioner for Patents
United States Patent and Trademark Office
P.O. Box 1450
Alexandria, VA 22313-1450
www.uspto.gov

OCT 14 2010

BC

In re application of	:	DECISION ON REQUEST TO
Tetsuo Saito	:	PARTICIPATE IN PATENT
Serial No. 12/615,471	:	PROSECUTION HIGHWAY
Filed: November 10, 2009	:	PROGRAM AND
For: SENSOR-SECURING APPARATUS	:	PETITION TO MAKE SPECIAL
AND CAMERA MODULE	:	UNDER 37 CFR 1.102(a)

This is a decision on the request to participate in the Patent Prosecution Highway (PPH) program filed August 18, 2010.

The request and petition are **GRANTED**.

A grantable request to participate in the PPH program and petition to make special require:

(1) The U.S. application must validly claim priority under 35 U.S.C. 119(a) to one or more applications filed in the JPO, note where the JPO application with similar claims is not the same application from which the U.S. application claims priority that the applicant must identify the relationship between the JPO application with similar claims and the JPO priority application;

(2) Applicant must submit a copy of:
   a. The allowable/patentable claim(s) from the JPO application(s) or if a copy of the allowable/patentable claims is available via the Dossier Access System (DAS) applicant may request the USPTO to obtain a copy from DAS; however, if the USPTO is unable to obtain a copy from the DAS, the applicant will be required to submit a copy;
   b. An English translation of the allowable/ patentable claim(s), if applicable; and
   c. A statement that the English translation is accurate, if applicable;

(3) Applicant must:
   a. Ensure all the claims in the U.S. application must sufficiently correspond or be amended to sufficiently correspond to the allowable/patentable claim(s) in the JPO application(s); and
   b. Submit a claims correspondence table in English;

(4) Examination of the U.S. application has not begun;

(5) Applicant must submit:
   a. Documentation of prior office action:

i. a copy of the office action(s) just prior to the "Decision to Grant a Patent" from each of the JPO application(s) containing the allowable/patentable claims(s) or
ii. if the allowable/patentable claim(s) are from "Notification of Reasons for Refusal" then the Notification of Reasons for Refusal or
iii. if the JPO application is a first action allowance then no office action from the JPO is necessary should be indicated on the request/petition form;
Further, if a copy of the documents from a or b is available via the Dossier Access System (DAS), applicant may request the USPO obtain a copy from the DAS; however, if the USPTO is unable to obtain a copy of the DAS, the applicant will be required to submit a copy;

b. An English language translation of the JPO Office action from (5)(a)(i)-(ii) above if applicable; and
c. A statement that the English translation is accurate;

(6) Applicant must submit:

a. An IDS listing the documents cited by the JPO examiner in the JPO office action (unless already submitted in this application)
b. Copies of documents except U.S. patents or U.S. patent application publications (unless already submitted in this application); and

The request to participate in the PPH program and petition comply with the above requirements. Accordingly, the above-identified application has been accorded "special" status.

The application is being forwarded to the examiner for action on the merits commensurate with this decision.

Any inquiry regarding this decision should be directed to Blaine Copenheaver, Quality Assurance Specialist, at (571) 272-1156.

All other inquiries concerning the examination or status of the application is accessible in the PAIR system at http://www.uspto.gov/ebc/index.html.

/Blaine Copenheaver/

Blaine Copenheaver
Quality Assurance Specialist
Technology Center 1700

UNITED STATES PATENT AND TRADEMARK OFFICE

Commissioner for Patents
United States Patent and Trademark Office
P.O. Box 1450

MAILED

SEP 07 2011

OFFICE OF PETITIONS

Barre Law Firm
c/o CPA Global
P.O. Box 52050
Minneapolis MN 55402

In re Application of :
Michael A. KOZUCH et al. : ON PETITION
Application No. 12/615,475 :
Filed: November 10, 2009 :
Atty. Docket No.: P10794C

This is a decision on the petition under 37 CFR 1.137(b), filed August 26, 2011, to revive the above-identified application.

The petition is **GRANTED**.

The application became abandoned for failure to reply in a timely manner to the nonfinal Office action mailed September 24, 2010 (outstanding Office action), which set a shortened statutory period of reply of three (3) months. No extension of time under the provisions of 37 CFR 1.136(a) was obtained. The application became abandoned December 25, 2010. A Notice of Abandonment was mailed August 15, 2011.

The petition satisfies the conditions for revival pursuant to 37 CFR 1.137(b) by including (1) a reply in the form of a Response to the outstanding Office action, (2) a petition fee of $1620, and (3) a statement of unintentional delay. The reply to the outstanding Office action is accepted as having been unintentionally delayed.

It is not apparent whether the person signing the statement of unintentional delay was in a position to have firsthand or direct knowledge of the facts and circumstances of the delay at issue. Nevertheless, such statement is being treated as having been made as the result of a reasonable inquiry into the facts and circumstances of such delay. See 37 CFR 10.18(b) and Changes to Patent Practice and Procedure; Final Rule Notice, 62 Fed. Reg. 53131, 53178 (October 10, 1997), 1203 Off. Gaz. Pat. Office 63, 103 (October 21, 1997). In the event that date for the reply until the filing of a grantable petition pursuant to 37 CFR 1.137(b) was unintentional, petitioner must notify the Office.

Telephone inquires regarding this decision should be directed to Robert DeWitty, Petitions Attorney, Office of Petitions (571-272-8427).

This application is being referred to the Technology Center Art Unit 2434 for consideration of the filed Response.

Ramesh Krishnamurthy

for Anthony Knight
Director
Office of Petitions

UNITED STATES PATENT AND TRADEMARK OFFICE

Commissioner for Patents
United States Patent and Trademark Office
P.O. Box 1450
Alexandria, VA 22313-1450
www.uspto.gov

KILPATRICK TOWNSEND & STOCKTON LLP
TWO EMBARCADERO CENTER
EIGHTH FLOOR
SAN FRANCISCO CA 94111-3834

MAILED
MAY 20 2011
OFFICE OF PETITIONS

In re Application of :
Charles McGonigal et al. :
Application No. 12/615,476 : DECISION ON PETITION
Filed: November 10, 2009 : TO WITHDRAW
Attorney Docket No. **020899-002110US** : FROM RECORD
:

This is a decision on the Request to Withdraw as attorney or agent of record under 37 CFR § 1.36(b), filed May 10, 2011.

The request is **NOT APPROVED**.

A review of the file record indicates that Paul C. Haughey or any attorneys/agents associated with Customer Number 020350 does not have power of attorney or was ever given power of attorney in this patent application. Accordingly, the request to withdraw under 37 CFR § 1.36(b) is not applicable.

All future communications from the Office will continue to be directed to the address of record until otherwise properly notified by the applicant.

Telephone inquires concerning this decision should be directed to JoAnne Burke at 571-272-4584.

JoAnne Burke
Petitions Examiner
Office of Petitions

UNITED STATES DEPARTMENT OF COMMERCE
Patent and Trademark Office
ASSISTANT SECRETARY OF COMMERCE AND
COMMISSIONER OF PATENTS AND TRADEMARKS
Washington, DC 20231

11/6/2011

Patent No. :8001181
Inventor(s) :Dale et al.
Issued :8/16/2011
Title :METHOD, SYSTEM AND APPARATUS FOR MESSAGING BETWEEN WIRELESS MOBILE TERMINALS AND NETWORKED COMPUTERS
Atty.doc./File No.

Request for Certificates of Correction

Consideration has been given to your request for the issuance of a Certificate of Correction, for the above – identified patent under the provisions of CFR 1.322.

Inspection of the application for the patent reveals that there is no column number, line number and what claim number. Please specify if these entries are deleted or added. Therefore being no fault on the Patent and Trademark Office, It has no authority to issue a certificate of correction under the provision of 1.322.

In view of the forgoing, your request in this matter, is hereby denied.

Future written correspondence concerning this matter should be filed and directed to Decisions & Certificates of Correction Branch.

Henry Randall
Decisions & Certificates
of Correction Branch
(703) 756-1571

LEVEQUE INTELLECTUAL PROPERTY LAW, P.C.
241 E.4th Street #102
Frederick, MD 21701

HR

UNITED STATES PATENT AND TRADEMARK OFFICE

UNITED STATES DEPARTMENT OF COMMERCE
United States Patent and Trademark Office
Address: COMMISSIONER FOR PATENTS
P.O. Box 1450
Alexandria, Virginia 22313-1450
www.uspto.gov

APPLICATION NO.	FILING DATE	FIRST NAMED INVENTOR	ATTORNEY DOCKET NO.	CONFIRMATION NO.
12/615,494	11/10/2009	Natsuki Nozawa	TMCY-10902/08	1709

25006 7590 06/20/2011

GIFFORD, KRASS, SPRINKLE,ANDERSON & CITKOWSKI, P.C
PO BOX 7021
TROY, MI 48007-7021

EXAMINER	
PHAN, HAU VAN	
ART UNIT	**PAPER NUMBER**
3618	
MAIL DATE	**DELIVERY MODE**
06/20/2011	PAPER

Please find below and/or attached an Office communication concerning this application or proceeding.

The time period for reply, if any, is set in the attached communication.

UNITED STATES PATENT AND TRADEMARK OFFICE

Commissioner for Patents
United States Patent and Trademark Office
P.O. Box 1450
Alexandria, VA 22313-1450
www.uspto.gov

JUN 20 2011

GIFFORD, KRASS, SPRINKLE,
ANDERSON & CITKOWSKI, P.C
PO BOX 7021
TROY MI 48007-7021

In re application of
Nozawa et al.
Application No. 12/615,494
Filed: November 10, 2009
For: ELECTRICALLY POWERED VEHICLE, CONTROL DEVICE FOR ELECTRICALLY POWERED VEHICLE, AND COMPUTER READABLE MEDIUM

: **DECISION ON REQUEST TO**
: **PARTICIPATE IN PATENT**
: **PROSECUTION HIGHWAY**
: **PROGRAM AND PETITION**
: **TO MAKE SPECIAL UNDER**
: **37 CFR 1.102(a)**

This is a decision on the request to participate in the Patent Prosecution Highway (PPH) program and the petition under 37 CFR 1.102(a), filed May 23, 2011, to make the above-identified application special.

The request and petition are **GRANTED**.

A grantable request to participate in the PPH program and petition to make special require:

(1) The U.S. application must validly claim priority under 35 U.S.C. 119(a) to one or more applications filed in the JPO, USPTO;
(2) Applicant must submit a copy of the allowable/patentable claim(s) from the JPO application(s) along with an English translation thereof and a statement that the English translation is accurate;
(3) All the claims in the U.S. application must sufficiently correspond or be amended to sufficiently correspond to the allowable/patentable claim(s) in the JPO application(s);
(4) Examination of the U.S. application has not begun;
(5) Applicant must submit a copy of the latest Office action from each of the JPO application(s) containing the allowable/patentable claim(s) along with an English translation thereof and a statement that the English translation is accurate;
(6) Applicant must submit an IDS listing the documents cited by the JPO examiner in the JPO Office action along with copies of documents except U.S. patents or U.S. patent application publications.

In light of the preliminary amendment filed on May 23, 2011, the request to participate in the PPH pilot program complies with the above requirements. Therefore, the above-identified application has been accorded "special" status.

All other inquiries concerning the examination or status of the application should be directed to the Patent Application Information Retrieval (PAIR) system.

The application is being forwarded to the examiner for action on the merits commensurate with this decision.

Any inquiry regarding this decision should be directed to Mikado Buiz, Quality Assurance Specialist, at (571) 272-6578.

/ Mikado Buiz /

Mikado Buiz,
Quality Assurance Specialist
Technology Center 3600

MB/MB: 06/17/11

UNITED STATES PATENT AND TRADEMARK OFFICE

Commissioner for Patents
United States Patent and Trademark Office
P.O. Box 1450
Alexandria, VA 22313-1450
www.uspto.gov

ADVANCED LIQUID LOGIC, INC.
C/O WARD AND SMITH, P.A.
1001 COLLEGE COURT
P.O. BOX 867
NEW BERN, NC 28563-0867

MAILED

NOV 08 2010

OFFICE OF PETITIONS

In re Application of
Pamula et al.
Application No. 12/615,609
Filed: November 10, 2009
Attorney Docket No. 060885-0287.024UTL2DVCON1

DECISION ON PETITION

This is a decision on the petition under 37 CFR 1.182, filed August 2, 2010, to change the order of the names of the inventors.

The petition is **DISMISSED**.

The petition to change the order of names must be signed by either the attorney or agent of record or all the applicants. Since the person signing the petition was never given a power of attorney to prosecute the application, the petition under § 1.182 to amend the order of inventors cannot be granted.

As authorized, the $400 fee for the petition under 37 CFR 1.182 has been assessed to petitioner's deposit account.

Further correspondence with respect to this matter should be addressed as follows:

By mail: Mail Stop PETITIONS
Commissioner for Patents
Post Office Box 1450
Alexandria, VA 22313-1450

By hand: Customer Service Window
Mail Stop Petitions
Randolph Building
401 Dulany Street
Alexandria, VA 22314

By fax: (571) 273-8300
ATTN: Office of Petitions

Any questions concerning this matter may be directed to Alicia Kelley at (571) 272-6059.

/Carl Friedman/
Carl Friedman
Petitions Examiner
Office of Petitions

UNITED STATES PATENT AND TRADEMARK OFFICE

Commissioner for Patents
United States Patent and Trademark Office
P.O. Box 1450
Alexandria, VA 22313-1450
www.uspto.gov

ADVANCED LIQUID LOGIC, INC.
C/O WARD AND SMITH, P.A.
1001 COLLEGE COURT
P.O. BOX 867
NEW BERN NC 28563-0867

MAILED

OCT 25 2010

OFFICE OF PETITIONS

In re Application of
Vamsee K. Pamula
Application No. 12/615,666
Filed: November 10, 2009
Attorney Docket No. **060885-0288.024UTL2DVCON2**

DECISION ON PETITION

This is a decision on the petition under 37 CFR 1.182, filed, August 2, 2010, to change the order of the named inventors in the above-identified application.

The petition is **DISMISSED**.

A petition to change the order of names of inventors under 37 CFR 1.182 must be signed by either the attorney or agent of record or all the applicants. ***See MPEP 605.04(f).***

A review of the file record indicates that E.Eric Mills or any attorneys/agents associated with Customer Number 67945 does not have power of attorney or was ever given power of attorney in the above-identified application. According to our records the Customer Number has been listed as the Representative Information in the application data sheet. However, providing the information in the application data sheet does not constitute as a power of attorney in the application. ***See 37 CFR § 1.76(b)(4)***. Therefore, if petitioner desires to be acknowledged as the attorney of record, the appropriate power of attorney must be submitted. Accordingly, the petition cannot be granted at this time.

Further correspondence with respect to this matter should be delivered through one of the following mediums:

By mail: Mail Stop PETITIONS
Commissioner for Patents
Post Office Box 1450
Alexandria, VA 22313-1450

By hand: Customer Service Window
Mail Stop Petitions
Randolph Building
401 Dulany Street
Alexandria, VA 22314

By fax: (571) 273-8300
ATTN: Office of Petitions

By internet: EFS-Web[1]

Any questions concerning this matter may be directed to JoAnne Burke at (571) 272-4584.

JoAnne Burke
Petitions Examiner
Office of Petitions

[1] www.uspto.gov/ebc/efs_help.html (for help using EFS-Web call the Patent Electronic Business Center at (866) 217-9197)

UNITED STATES PATENT AND TRADEMARK OFFICE

Commissioner for Patents
United States Patent and Trademark Office
P.O. Box 1450
Alexandria, VA 22313-1450
www.uspto.gov

DALY, CROWLEY, MOFFORD & DURKEE, LLP
SUITE 301A
354A TURNPIKE STREET
CANTON, MA 02021-2714

MAILED
JUL 14 2011
OFFICE OF PETITIONS

In re Application of :
Joel L. Dawson, et al. :
Application No. 12/615,696 : DECISION GRANTING PETITION
Filed: November 10, 2009 : UNDER 37 CFR 1.313(c)(2)
Attorney Docket No. MIT-197AUS :

This is a decision on the petition under 37 CFR 1.313(c)(2), filed July 13, 2011, to withdraw the above-identified application from issue after payment of the issue fee.

The petition is **GRANTED**.

The above-identified application is withdrawn from issue for consideration of a submission under 37 CFR 1.114 (request for continued examination). *See* 37 CFR 1.313(c)(2).

Petitioner is advised that the issue fee paid on June 23, 2011 cannot be refunded. If, however, this application is again allowed, petitioner may request that it be applied towards the issue fee required by the new Notice of Allowance.[1]

Telephone inquiries regarding this decision should be directed to undersigned at (571) 272-1642. All other inquiries concerning the examination or status of this application should be directed to the Technology Center.

This application is being referred to Technology Center AU 2817 for processing of the request for continued examination under 37 CFR 1.114 and for consideration of the concurrently filed information disclosure statement.

/AMW/
April M. Wise
Petitions Examiner
Office of Petitions

[1] *The request to apply the issue fee to the new Notice may be satisfied by completing and returning the new Part B – Fee(s) Transmittal Form (along with any balance due at the time of submission). Petitioner is advised that the Issue Fee Transmittal Form must be completed and timely submitted to avoid abandonment of the application.*

UNITED STATES PATENT AND TRADEMARK OFFICE

UNITED STATES DEPARTMENT OF COMMERCE
United States Patent and Trademark Office
Address: COMMISSIONER FOR PATENTS
P.O. Box 1450
Alexandria, Virginia 22313-1450
www.uspto.gov

APPLICATION NO.	FILING DATE	FIRST NAMED INVENTOR	ATTORNEY DOCKET NO.	CONFIRMATION NO.
12/615,750	11/10/2009	Tomohiro KONO	1691-0214PUS3	1195

2292 7590 08/26/2010

BIRCH STEWART KOLASCH & BIRCH
PO BOX 747
FALLS CHURCH, VA 22040-0747

EXAMINER	
BERTOGLIO, VALARIE E	
ART UNIT	PAPER NUMBER
1632	

NOTIFICATION DATE	DELIVERY MODE
08/26/2010	ELECTRONIC

Please find below and/or attached an Office communication concerning this application or proceeding.

The time period for reply, if any, is set in the attached communication.

Notice of the Office communication was sent electronically on above-indicated "Notification Date" to the following e-mail address(es):

mailroom@bskb.com

UNITED STATES PATENT AND TRADEMARK OFFICE

Commissioner for Patents
United States Patent and Trademark Office
P.O. Box 1450
Alexandria, VA 22313-1450
www.uspto.gov

BIRCH STEWART KOLASCH & BIRCH
PO BOX 747
FALLS CHURCH VA 22040-0747

AUG 2 6 2010

In re Application of	:	
KONO, TOMOHIRO et. al.	:	DECISION ON REQUEST TO
Application No. 12/615,750	:	PARTICIPATE IN PATENT
Filed: November 10, 2009	:	PROSECUTION HIGHWAY
Attorney Docket No. 1691-0214PUS3	:	PROGRAM AND PETITION
	:	TO MAKE SPECIAL UNDER
	:	37 CFR 1.102(d)

This is a decision on the request to participate in the Patent Prosecution Highway (PPH) program and the petition under 37 CFR 1.102(d), filed November 12, 2009, to make the above-identified application special.

The request and petition are **GRANTED**.

A grantable request to participate in the PPH program and petition to make special require:

(1) The U.S. application must validly claim priority under 35 U.S.C. 119(a) to one or more applications filed in the JPO;
(2) Applicant must submit a copy of the allowable/patentable claim(s) from the JPO application(s) along with an English translation thereof and a statement that the English translation is accurate;
(3) All the claims in the U.S. application must sufficiently correspond or be amended to sufficiently correspond to the allowable/patentable claim(s) in the JPO application(s);
(4) Examination of the U.S. application has not begun;
(5) Applicant must submit a copy of all the office actions from each of the JPO application(s) containing the allowable/patentable claim(s) along with an English translation thereof and a statement that the English translation is accurate;
(6) Applicant must submit an IDS listing the documents cited by the JPO examiner in the JPO office action along with copies of documents except U.S. patents or U.S. patent application publications; and
(7) The required petition fee under 37 CFR 1.17(h).

The request to participate in the PPH program and petition comply with the above requirements. Accordingly, the above-identified application has been accorded "special" status.

Telephone inquiries concerning this decision should be directed to Ram R. Shukla at 571-272-0735.

All other inquiries concerning the examination or status of the application should be directed to Patent Application Information Retrieval (PAIR) system at the http://www.uspto.gov/ebc/index.html.

The application is being forwarded to the examiner for action on the merits commensurate with this decision.

Ram R. Shukla, Ph.D.
Supervisory Patent Examiner
TC 1600

RAM R. SHUKLA, PH.D.
SUPERVISORY PATENT EXAMINER

SPE RESPONSE FOR CERTIFICATE OF CORRECTION

DATE : 11/15/11

TO SPE OF : ART UNIT 1765

SUBJECT : Request for Certificate of Correction for Appl. No.: 12615859 Patent No.: 8025901

CofC mailroom date: 11/08/11

Please respond to this request for a certificate of correction within 7 days.

FOR IFW FILES:

Please review the requested changes/corrections as shown in the **COCIN** document(s) in the IFW application image. No new matter should be introduced, nor should the scope or meaning of the claims be changed.

Please complete the response (see below) and forward the completed response to scanning using document code **COCX**.

FOR PAPER FILES:

Please review the requested changes/corrections as shown in the attached certificate of correction. Please complete this form (see below) and forward it with the file to:

Certificates of Correction Branch (CofC)
Randolph Square – 9D10-A
Palm Location 7580
You can fax the Directors/SPE response to 571-273-3421

Note: **Should the changes to claim 12 and 13 be approved?**

Lamonte Newsome

Certificates of Correction Branch

571-272-3421

Thank You For Your Assistance

The request for issuing the above-identified correction(s) is hereby:
Note your decision on the appropriate box.

SPE RESPONSE FOR CERTIFICATE OF CORRECTION

☒ **Approved** — **All** changes apply.

☐ **Approved in Part** — Specify below which changes **do not** apply.

☐ **Denied** — State the reasons for denial below.

Comments: _____

_____

_____

_____

_____

_____ 1765

SPE **Art Unit**

SPE RESPONSE FOR CERTIFICATE OF CORRECTION

DATE : 11/15/11

TO SPE OF : ART UNIT 1765

SUBJECT : Request for Certificate of Correction for Appl. No.: 12615859 Patent No.: 8025901

CofC mailroom date: 11/08/11

Please respond to this request for a certificate of correction within 7 days.

FOR IFW FILES:

Please review the requested changes/corrections as shown in the **COCIN** document(s) in the IFW application image. No new matter should be introduced, nor should the scope or meaning of the claims be changed.

Please complete the response (see below) and forward the completed response to scanning using document code **COCX**.

FOR PAPER FILES:

Please review the requested changes/corrections as shown in the attached certificate of correction. Please complete this form (see below) and forward it with the file to:

Certificates of Correction Branch (CofC)
Randolph Square – 9D10-A
Palm Location 7580
[redacted]

Note: Should the changes to claim 12 and 13 be approved?

It should be approved.

[signature] SPE 1765

Lamonte Newsome

Certificates of Correction Branch

571-272-3421

Thank You For Your Assistance

The request for issuing the above-identified correction(s) is hereby:
Note your decision on the appropriate box.

UNITED STATES PATENT AND TRADEMARK OFFICE

UNITED STATES DEPARTMENT OF COMMERCE
United States Patent and Trademark Office
Address: COMMISSIONER FOR PATENTS
P.O. Box 1450
Alexandria, Virginia 22313-1450
www.uspto.gov

APPLICATION NO.	FILING DATE	FIRST NAMED INVENTOR	ATTORNEY DOCKET NO.	CONFIRMATION NO.
12/615,966	11/10/2009	Joseph C. Mallinger	112765-001CT2	1599

27189 7590 05/06/2011

PROCOPIO, CORY, HARGREAVES & SAVITCH LLP
525 B STREET
SUITE 2200
SAN DIEGO, CA 92101

EXAMINER	
PANI, JOHN	

ART UNIT	PAPER NUMBER
3736	

NOTIFICATION DATE	DELIVERY MODE
05/06/2011	ELECTRONIC

Please find below and/or attached an Office communication concerning this application or proceeding.

The time period for reply, if any, is set in the attached communication.

Notice of the Office communication was sent electronically on above-indicated "Notification Date" to the following e-mail address(es):

docketing@procopio.com
PTONotifications@procopio.com

UNITED STATES PATENT AND TRADEMARK OFFICE

Commissioner for Patents
United States Patent and Trademark Office
P.O. Box 1450
Alexandria, VA 22313-1450
www.uspto.gov

PROCOPIO, CORY, HARGREAVES & SAVITCH LLP
525 B STREET
SUITE 2200
SAN DIEGO CA 92101

In re Application of	:	
MALLINGER, JOSEPH C. et al	:	DECISION ON REQUEST TO
Application No. 12/615,966	:	PARTICIPATE IN PATENT
Filed: Nov. 10, 2009	:	PROSECUTION HIGHWAY
Attorney Docket No. 112765-001CT2	:	PILOT PROGRAM AND PETITION
FOR: APPARATUS FOR PREVENTING NERVE DAMAGE POSITIONAL INJURY DURING SURGERY	:	TO MAKE SPECIAL UNDER 37 CFR 1.102(a)

This is a decision on the request to participate in the Patent Prosecution Highway (PPH) program and the petition under 37 CFR 1.102(a), filed April 27 to make the above-identified application special.

The request and petition are Dismissed.

A grantable request to participate in the PPH program and petition to make special require:
(1) The U.S. application must disclose an eligible relationship to one or more PCT applications filed in the JPO, EPO, KIPO or USPTO;
(2) Applicant must submit a copy of the allowable/patentable claim(s) from the PCT application(s) latest international work product (the written opinion or the IPER) along with an English translation thereof and a statement that the English translation is accurate;
(3) All the claims in the U.S. application must sufficiently correspond or be amended to sufficiently correspond to the allowable/patentable claim(s) in the PCT application(s);
(4) Examination of the U.S. application has not begun;
(5) Applicant must submit a copy of the latest international work product from the PCT application containing the allowable/patentable claim(s) along with an English translation thereof and a statement that the English translation is accurate; and
(6) Applicant must submit an IDS listing the documents cited by the PCT examiner in the international work product along with copies of documents except U.S. patents or U.S. patent application publications.

The request to participate in the PPH program and petition met all conditions except Items #3 and #5 above.

With regard to Items #3 and #5, the claims in the U.S. application must sufficiently correspond or be amended to sufficiently correspond to the allowable/patentable claims in the PCT application. The Claims Correspondence Table in the petition is deficient. Current US application contains claims 2-7 filed on April 27, 2011 which are not sufficiently corresponding to allowable claims 3 and 5-7 of PCT search report and search opinion of PCT/US2009/041803. The newly added method claim 4 must be cancelled because PCT search opinion does not show claim 4 satisfied all of the novelty, inventive step and industrial applicability test. Thus, Item #3 is not satisfied and for this reason the petition can not be granted. In order to grant the PPH request, the added/amended claim 4 must be cancelled.

Applicant is encouraged to cite and submit all relevant prior art references, if any, to facilitate examination in this application.

Applicant is given a time period of **ONE MONTH or THIRTY DAYS**, whichever is longer, from the mailing date of this decision to correct the deficiencies. **NO EXTENSION OF TIME UNDER 37 CFR 1.136 IS PERMITTED.** If the deficiencies are not corrected with the time period given, the application will await action in its regular turn. Response must be filed via EFS-Web.

Telephone inquiries concerning this decision should be directed to Henry C. Yuen at 571-272-4856.

Petition is **dismissed**.

/Henry C. Yuen/

Henry C. Yuen, Special Programs Examiner
Technology Center 3700 – Mechanical Engineering,
Manufacturing and Products
571-272-4856

BAS/CBE

Manned

32421-2020800

UNITED STATES PATENT AND TRADEMARK OFFICE

Commissioner for Patents
United States Patent and Trademark Office
P.O. Box 1450
Alexandria, VA 22313-1450
www.uspto.gov

RECEIVED
FEB 04 2010
Morrison & Foerster, LLP
Palo Alto

YAHOO C/O MOFO PALO ALTO
755 PAGE MILL ROAD
PALO ALTO, CA 94304

COPY MAILED
JAN 27 2010

In re Application of	:	
Andrew S. Tomkins, et al.	:	DECISION GRANTING STATUS
Application No. 12/615,986	:	UNDER 37 CFR 1.47(a)
Filed: November 10, 2009	:	
Attorney Docket No. 324212020800	:	

This is in response to the petition under 37 CFR 1.47(a), filed November 10, 2009.

The petition is **GRANTED.**

The application and papers have been reviewed and found in compliance with 37 CFR 1.47(a). This application is hereby accorded Rule 1.47(a) status.

Petitioner has shown that the non-signing inventor, Cameron A. Marlow, has refused to join in the filing of the above-identified application.

As provided in 37 CFR 1.47(c), this Office will forward notice of this application's filing to the non-signing inventor at the address given in the petition. Notice of the filing of this application will also be published in the Official Gazette.

The application is being referred to the Office of Patent Application Processing (OPAP) for further processing.

Telephone inquires related to this decision should be directed to the undersigned at (571) 272-3204. Telephone inquiries related to processing at OPAP should be directed to their hotline at (571) 272-4000.

Sherry D. Brinkley
Petitions Examiner
Office of Petitions

GM

DOCKETED PTO Corr Rec'd

TKD

UNITED STATES PATENT AND TRADEMARK OFFICE

Commissioner for Patents
United States Patent and Trademark Office
P.O. Box 1450
Alexandria, VA 22313-1450
www.uspto.gov

Howison & Arnott, L.L.P.
P.O. Box 741715
Dallas TX 75374-1715

MAILED

JUL 28 2011

OFFICE OF PETITIONS

In re Application of	:	
Kaysar Rahim, et al.	:	
Application No. 12/616,077	:	DECISION GRANTING PETITION
Filed: November 10, 2009	:	UNDER 37 CFR 1.313(c)(2)
Attorney Docket No. MXIM-29,728 (MAXM-0706)	:	

This is a decision on the petition under 37 CFR 1.313(c)(2), filed, July 27, 2011 to withdraw the above-identified application from issue after payment of the issue fee.

The petition is **GRANTED**.

The above-identified application is withdrawn from issue for consideration of a submission under 37 CFR 1.114 (request for continued examination). *See* 37 CFR 1.313(c)(2).

Petitioner is advised that the issue fee paid on June 27, 2011 cannot be refunded. If, however, this application is again allowed, petitioner may request that it be applied towards the issue fee required by the new Notice of Allowance.[1]

Telephone inquiries should be directed to Terri Johnson at (571) 272-2991.

This application is being referred to Technology Center AU 2823 for processing of the request for continued examination under 37 CFR 1.114 and for consideration of the concurrently filed information disclosure statement.

/Terri Johnson/
Terri Johnson
Petitions Examiner
Office of Petitions

[1] *The request to apply the issue fee to the new Notice may be satisfied by completing and returning the new Part B – Fee(s) Transmittal Form (along with any balance due at the time of submission). Petitioner is advised that the Issue Fee Transmittal Form must be completed and timely submitted to avoid abandonment of the application.*

UNITED STATES PATENT AND TRADEMARK OFFICE

Commissioner for Patents
United States Patent and Trademark Office
P.O. Box 1450
Alexandria, VA 22313-1450
www.uspto.gov

CROCKETT & CROCKETT, P.C.
26020 ACERO
SUITE 200
MISSION VIEJO, CA 92691

MAILED

MAR 03 2011

OFFICE OF PETITIONS

In re Application of :
Vayser et al. :
Application No. 12/616,095 : DECISION ON PETITION
Filed: November 10, 2009 TO WITHDRAW FROM RECORD
Attorney Docket No. 028638-001400US :
:

This is a decision on the Request to Withdraw as attorney or agent of record under 37 C.F.R. § 1.36(b), filed January 20, 2011.

The request is **NOT APPROVED** because it is moot.

A review of the file record indicates that on February 11, 2011 the power of attorney to Crockett & Crockett, P.C. was revoked by the assignee of the patent application. Accordingly, the request to withdraw under 37 C.F.R. § 1.36(b) is moot.

All future communications from the Office will be directed to the address listed below until otherwise notified by applicant.

Telephone inquires concerning this decision should be directed to the undersigned at 571-272- 7751. All other inquires concerning either the examination or status of the application should be directed to the Technology Center.

Joan Olszewski
Petitions Examiner
Office of Petitions

cc: KILPATRICK TOWNSEND & STOCKTON LLP
TWO EMBARCADERO CENTER
EIGHTH FLOOR
SAN FRANCISCO CA 94111-3834

UNITED STATES PATENT AND TRADEMARK OFFICE

Commissioner for Patents
United States Patent and Trademark Office
P.O. Box 1450
Alexandria, VA 22313-1450
www.uspto.gov

THE BOC GROUP, INC.
575 MOUNTAIN AVENUE
MURRAY HILL NJ 07974-2082

MAILED

SEP 30 2010

OFFICE OF PETITIONS

In re Application of :
Bailey, et al. :
Application No. 12/616,195 : DECISION
Filed/Deposited: 11 February, 2010 :
Attorney Docket No. M06B131-1 :

This is a decision on the petition filed 11 February, 2010, seeking to have accorded a filing date of 11 November, 2009, for the above-identified application based upon a showing that the omitted drawing/figures were present in the prior-filed co-pending non-provisional and application to which this application claimed benefit (pursuant to 37 C.F.R. §1.78) on deposit. The petition is properly considered pursuant to 37 C.F.R. §1.57(a).

For reasons stated herein, the petition is **DISMISSED**.

The instant application papers were deposited on 11 November, 2009. (The application preliminary amendment contained a claim for priority, but no express incorporation by reference statement.)

On 15 December, 2009, the Office of Patent Application Processing (OPAP) mailed a Notice of Incomplete Nonprovisional Application, stating that the application had not been accorded a filing date because it had been deposited without drawing as required under 35 U.S.C. §113 (first sentence). The Office indicated that Petitioner could demonstrate on petition the presence of the drawings/figures by presentation of evidence of deposit (e.g., date-stamped receipt card, EFS Acknowledgement Receipt); or submit the drawings/figures and accept the date of submission as the filing date.

The Office gave Petitioner two (2) months within which to reply.

On 11 February, 2010, Petitioner filed, *inter alia*, filed a petition pursuant to 37 C.F.R. §1.57 seeking a filing date of 11 November, 2009, for the application.

Petitioner appears to have filed drawings.

It is noted that upon deposit of the application papers, Petitioner submitted a preliminary amendment (by which Petitioner cancelled all method claims).

With regard to the substance of the petition, the statement submitted as a claim pursuant to the regulations at 37 C.F.R. §1.78 and §1.57 is unacceptable under the Rule for the purposes of obtaining a filing date:

- The reference to Application No. 11/490,143 (the '143 application) utilizes the word "divisional," but does not establish the relationship (such that this application is recognized as a division of '143).

- It appears that Application No. 11/490,143 is a typographical error (of Application No. 11/409,143).

- The drawings are not presented by amendment as required pursuant to the regulations at 37 C.F.R. §1.57 requires an amendment.

Pursuant to this decision, the application is referred to the Office of Patent Application Processing (OPAP) for:

X **correction of the filing date to 11 February, 2010,** the date of the submission of drawings herein;

X **issuance of a filing receipt.**

Telephone inquiries concerning this decision should be directed to John J Gillon, Jr., attorney, at (571) 272-3214. Inquiries regarding initial patent application processing should be directed to OPAP.

Chris Bottorff
Supervisory Petitions Examiner
Office of Petitions

UNITED STATES PATENT AND TRADEMARK OFFICE

UNITED STATES DEPARTMENT OF COMMERCE
United States Patent and Trademark Office
Address: COMMISSIONER FOR PATENTS
P.O. Box 1450
Alexandria, Virginia 22313-1450
www.uspto.gov

APPLICATION NO.	FILING DATE	FIRST NAMED INVENTOR	ATTORNEY DOCKET NO.	CONFIRMATION NO.
12/616,220	11/11/2009	Yusuke OGATA	350690US26	2115

22850 7590 03/25/2011

OBLON, SPIVAK, MCCLELLAND MAIER & NEUSTADT, L.L.P.
1940 DUKE STREET
ALEXANDRIA, VA 22314

EXAMINER	
REESE, ROBERT T	

ART UNIT	PAPER NUMBER
3654	

NOTIFICATION DATE	DELIVERY MODE
03/25/2011	ELECTRONIC

Please find below and/or attached an Office communication concerning this application or proceeding.

The time period for reply, if any, is set in the attached communication.

Notice of the Office communication was sent electronically on above-indicated "Notification Date" to the following e-mail address(es):

patentdocket@oblon.com
oblonpat@oblon.com
jgardner@oblon.com

UNITED STATES PATENT AND TRADEMARK OFFICE

Commissioner for Patents
United States Patent and Trademark Office
P.O. Box 1450
Alexandria, VA 22313-1450
www.uspto.gov

MAR 2 4 2011

OBLON, SPIVAK, MCCLELLAND
MAIER & NEUSTADT, L.L.P.
1940 DUKE STREET
ALEXANDRIA VA 22314

In re application of	:	**DECISION ON REQUEST TO**
Yusuki Ogata	:	**PARTICIPATE IN PATENT**
Application No. 12/616,220	:	**PROSECUTION HIGHWAY**
Filed: November 11, 2009	:	**PROGRAM AND PETITION**
For: HYDRAULIC PRESSURE SUPPLY UNIT OF CONTINUOUSLY VARIABLE TRANSMISSION	:	**TO MAKE SPECIAL UNDER 37 CFR 1.102(a)**

This is a decision on the request to participate in the Patent Prosecution Highway (PPH) program and the petition under 37 CFR 1.102(a), filed February 15, 2011, to make the above-identified application special.

The request and petition are **GRANTED**.

A grantable request to participate in the PPH program and petition to make special require:

(1) The U.S. application must validly claim priority under 35 U.S.C. 119(a) to one or more applications filed in the JPO, USPTO;
(2) Applicant must submit a copy of the allowable/patentable claim(s) from the JPO application(s) along with an English translation thereof and a statement that the English translation is accurate;
(3) All the claims in the U.S. application must sufficiently correspond or be amended to sufficiently correspond to the allowable/patentable claim(s) in the JPO application(s);
(4) Examination of the U.S. application has not begun;
(5) Applicant must submit a copy of the latest Office action from each of the JPO application(s) containing the allowable/patentable claim(s) along with an English translation thereof and a statement that the English translation is accurate;
(6) Applicant must submit an IDS listing the documents cited by the JPO examiner in the JPO Office action along with copies of documents except U.S. patents or U.S. patent application publications.

In light of the preliminary amendment filed February 15, 2011 and the petition being properly submitted via EFS-Web as is required, the request to participate in the PPH pilot program complies with the above requirements. Therefore, the above-identified application has been accorded "special" status.

All other inquiries concerning the examination or status of the application should be directed to the Patent Application Information Retrieval (PAIR) system.

The application is being forwarded to the examiner for action on the merits commensurate with this decision.

Any inquiry regarding this decision should be directed to Mikado Buiz, Quality Assurance Specialist, at (571) 272-6578.

/ Mikado Buiz /

Mikado Buiz,
Quality Assurance Specialist
Technology Center 3600

MB/MB: 03/23/11

UNITED STATES PATENT AND TRADEMARK OFFICE

Commissioner for Patents
United States Patent and Trademark Office
P.O. Box 1450
Alexandria, VA 22313-1450
www.uspto.gov

ALLEN DYER DOPPELT MILBRATH & GILCHRIST - RIM
255 S. ORANGE AVENUE, SUITE 1401
ORLANDO, FL 32801

MAILED
MAR 10 2011
OFFICE OF PETITIONS

In re Application of :
Zoltan KEMENCZY, et *al.* :
Application No. 12/616,251 : DECISION GRANTING PETITION
Filed: November 11, 2009 : UNDER 37 CFR 1.313(c)(2)
Attorney Docket No. **30131-11-US-CNT** :
85054CON1

This is a decision on the petition under 37 CFR 1.313(c)(2), filed March 10, 2011, to withdraw the above-identified application from issue after payment of the issue fee.

The petition is **GRANTED**.

The above-identified application is withdrawn from issue for consideration of a submission under 37 CFR 1.114 (request for continued examination). *See* 37 CFR 1.313(c)(2).

Petitioner is advised that the issue fee paid on February 7, 2011 cannot be refunded. If, however, this application is again allowed, petitioner may request that it be applied towards the issue fee required by the new Notice of Allowance.[1]

Telephone inquiries should be directed to the undersigned at (571) 272-7253.

This application is being referred to Technology Center AU 2611 for processing of the request for continued examination under 37 CFR 1.114 and for consideration of the concurrently filed information disclosure statement.

/Monica A. Graves/
Petitions Examiner, Office of Petitions

[1] *The request to apply the issue fee to the new Notice may be satisfied by completing and returning the new Part B – Fee(s) Transmittal Form (along with any balance due at the time of submission). Petitioner is advised that the Issue Fee Transmittal Form* ***must*** *be completed and timely submitted to avoid abandonment of the application.*

UNITED STATES PATENT AND TRADEMARK OFFICE

Commissioner for Patents
United States Patent and Trademark Office
P.O. Box 1450
Alexandria, VA 22313-1450
www.uspto.gov
DIW Sep-10

BACHMAN & LAPOINTE, P.C.
900 CHAPEL STREET
SUITE 1201
NEW HAVEN CT 06510

MAILED

SEP 27 2010

OFFICE OF PETITIONS

In re Application of :
Ventresca et al : DECISION ON PETITION
Application No. 12/616,331 :
Filed: November 11, 2009 :
Atty Docket No. 02-797-2 :

This is in response to the communication entitled "RESPONSE TO DECISION ON PETITION" filed April 21, 2010, which is being treated as a corrected decision to the "PETITION UNDER 37 CFR §1.57(a)" filed on December 4, 2009, requesting that the above-referenced application be accorded a filing date of November 11, 2009. This petition is being treated pursuant to 37 CFR 1.53(e)(2)[1].

Application papers in the above-identified application were deposited on November 11, 2009. However, on November 23, 2009, the Office of Patent Application Processing mailed applicants a "Notice of Incomplete Nonprovisional Application," notifying applicant that the application papers had not been accorded a filing date because the application was deposited without drawings. In response, applicant timely filed this petition. Applicant requests that the application be amended to include the inadvertently omitted drawings on the basis that the application

---

[1] Any request for review of a notification pursuant to paragraph (e)(1) of this section, or a notification that the original application papers lack a portion of the specification or drawing(s), must be by way of a petition pursuant to this paragraph accompanied by the fee set forth in § 1.17(f). In the absence of a timely (§ 1.181(f)) petition pursuant to this paragraph, the filing date of an application in which the applicant was notified of a filing error pursuant to paragraph (e)(1) of this section will be the date the filing error is corrected.

as filed contained a prior benefit claim under 37 CFR 1.55 or 1.78.

Petitioner's arguments and evidence have been considered. However, a review of the application confirms that, as filed, the application contained at least one method and one process claim. MPEP 601.01(f) provides that:

> It has been USPTO practice to treat an application that contains at least one process or method claim as an application for which a drawing is not necessary for an understanding of the invention under 35 U.S.C. 113 (first sentence).

Thus, pursuant to § 601.01(f), a drawing is not considered essential for a filing date. The instant application is entitled to a filing date without drawings present in the application.

Accordingly, the Office should have granted the application a filing date and mailed a Notice of Omitted Items instead of a Notice of Incomplete Nonprovisional Application. As stated in MPEP 601.01(g) under the section entitled, "Application Entitled to a Filing Date," applicant may submit an amendment to include the inadvertently omitted portion of the drawing(s) pursuant to 37 CFR 1.57(a):

> [i]f an application was filed on or after September 21, 2004, and contains a claim under 37 CFR 1.55 for priority of a prior-filed foreign application, or a claim under 37 CFR 1.78 for the benefit of a prior-filed provisional, nonprovisional, or international application that was present on the filing date of the application, and the omitted portion of the drawing(s) was inadvertently omitted from the application and is completely contained in the prior-filed application[.]

Please note that no petition is required and that the amendment must comply with 37 CFR 1.57(a) and 37 CFR 1.121. See MPEP § 201.17. Petitioners may wish to consider filing a preliminary amendment to enter the inadvertently omitted drawings. If a preliminary amendment is filed, it will be reviewed for new matter by the examiner.

To the extent the instant petition requests a filing date of November 11, 2009, with no drawings present in the application, the petition is **GRANTED**.

Given the basis for granting this petition, the petition fee is unnecessary. Petitioner may request a refund of the petition fee

by writing to the Office of Finance, Refund Section. A copy of this decision should accompany the request.

Pursuant to this decision, the application will be referred to Office of Patent Application Processing for:

- **correction of the filing date to November 11, 2009**;
- **for indication in Office records, as appropriate, that "0" sheets of drawings were present on filing** and
- **for issuance of a filing receipt.**

Telephone inquiries specific to this decision should be directed to Karen Creasy at (571)272-3208.

Anthony Knight
Director
Office of Petitions

UNITED STATES PATENT AND TRADEMARK OFFICE

Commissioner for Patents
United States Patent and Trademark Office
P.O. Box 1450
Alexandria, VA 22313-1450
www.uspto.gov

GIFFORD, KRASS, SPRINKLE, ANDERSON & CITKOWSKI, P.C.
P.O. BOX 7021
TROY, MICHIGAN 48007-7021

MAILED

AUG 29 2011

OFFICE OF PETITIONS

In re Application of :
NORITAKE MITSUTANI et al :
Application No. 12/616,357 : DECISION ON PETITION
Filed: November 11, 2009 :
Attorney Docket No. tmci-1092/08 :

This is a decision on the petition under 37 CFR 1.59(b), filed March 2, 2011, to expunge information from the above identified application.

The petition is **GRANTED**.

Petitioner requests that a document filed December 28, 2010, be expunged from the record. Petitioner states that either (A) that the information contains trade secret material, proprietary material and/or material that is subject to a protective order which has not been made public; or (B) that the information submitted was unintentionally submitted and the failure to obtain its return would cause irreparable harm to the party who submitted the information or to the party in interest on whose behalf the information was submitted, and the information has not otherwise been made public. The petition fee set forth in 37 CFR 1.17(g) has been paid.

The information in question has been determined by the undersigned to not be material to the examination of the instant application.

In a paper file, the unintentionally submitted exhibits could, but not necessarily would, have been physically removed from the file wrapper and returned to applicant. In the IFW realm the corresponding action(s) is to close the document and also remove such from the listing of "Publicly available Documents." It is agreed that it would be appropriate in this instance to close the information in application serial no. 12/616,357 which was erroneously filed in the above identified application, and also remove such from the listing of publicly available documents for this Image File Wrapper (IFW). Petitioner understands that upon granting the petition, the image of the inadvertently recorded document would remain in the records of the Assignment Services Division at the same reel and frame number, but that the link to said information in the patent

would be deleted, so that no information about the inadvertently recorded document would appear when searching for the patent numbers in the Assignment Historical Database.

Applicant is required to retain the expunged material(s) for the life of the patent which issued on the above-identified application.

Telephone inquiries concerning this communication should be directed to the undersigned at 571-272-0602.

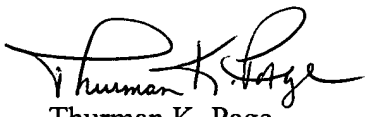

Thurman K. Page
Petitions Examiner
Office of Petitions

UNITED STATES PATENT AND TRADEMARK OFFICE

Commissioner for Patents
United States Patent and Trademark Office
P.O. Box 1450
Alexandria, VA 22313-1450
www.uspto.gov

In re Application of
RAMON E. POO

Application No. 12616396

Filed: November 11,2009

Attorney Docket No. 7130-20

:
:
:DECISION ON PETITION TO MAKE SPECIAL
:UNDER 37 CFR 1.102(c)(1)
:

This is a decision on the electronic petition under 37 CFR 1.102 (c)(1), filed 20-DEC-2011 to make the above-identified application special based on applicant's age as set forth in MPEP § 708.02, Section IV.

The petition is **GRANTED**.

A grantable petition to make an application special under 37 CFR 1.102(c)(1), MPEP § 708.02, Section IV: Applicant's Age must include a statement by applicant or a registered practitioner having evidence that applicant is at least 65 years of age. No fee is required.

Accordingly, the above-identified application has been accorded "special" status and will be taken up for action by the examiner upon the completion of all pre-examination processing.

Telephone inquiries concerning this electronic decision should be directed to the Electronic Business Center at 866-217-9197.

All other inquiries concerning either the examination or status of the application should be directed to the Technology Center.

Doc code : PET.OP.AGE
Description : Petition to make special based on Age/Health

PTO/SB/130 (07-09)
Approved for use through 07/31/2012. OMB 0651- 0031
U.S. Patent and Trademark Office; U.S. DEPARTMENT OF COMMERCE
Under the Paperwork Reduction Act of 1995, no persons are required to respond to a collection of information unless it contains a valid OMB control number

PETITION TO MAKE SPECIAL BASED ON AGE FOR ADVANCEMENT OF EXAMINATION UNDER 37 CFR 1.102(c)(1)

Application Information

Application Number	12/616,396	Confirmation Number	2447	Filing Date	2009-11-11
Attorney Docket Number (optional)	7130-20	Art Unit	3721	Examiner	Michelle Lopez
First Named Inventor	Ramon E. Poo				
Title of Invention	ANASTOMOSIS SYSTEM AND METHOD				

Attention: Office of Petitions

An application may be made special for advancement of examination upon filing of a petition showing that the applicant is 65 years of age, or more. No fee is required with such a petition. See 37 CFR 1.102(c)(1) and MPEP 708.02 (IV).

APPLICANT HEREBY PETITIONS TO MAKE SPECIAL FOR ADVANCEMENT OF EXAMINATION IN THIS APPLICATION UNDER 37 CFR 1.102(c)(1) and MPEP 708.02 (IV) ON THE BASIS OF THE APPLICANT'S AGE.

A grantable petition requires one of the following items:
(1) Statement by one named inventor in the application that he/she is 65 years of age, or more; or
(2) Certification by a registered attorney/agent having evidence such as a birth certificate, passport, driver's license, etc. showing one named inventor in the application is 65 years of age, or more.

Name of Inventor who is 65 years of age, or older

Given Name	Middle Name	Family Name	Suffix
Ramon	E.	Poo	

A signature of the applicant or representative is required in accordance with 37 CFR 1.33 and 10.18.
Please see 37 CFR 1.4(d) for the format of the signature.

Select (1) or (2) :

○ (1) I am an inventor in this application and I am 65 years of age, or more.

● (2) I am an attorney or agent registered to practice before the Patent and Trademark Office, and I certify that I am in possession of evidence, and will retain such in the application file record, showing that the inventor listed above is 65 years of age, or more.

Signature	/Gregory A. Nelson/	Date (YYYY-MM-DD)	2011-12-20
Name	Gregory A. Nelson	Registration Number	30577

PTO/SB/130 (07-09)
Approved for use through 07/31/2012. OMB 0651- 0031
U.S. Patent and Trademark Office; U.S. DEPARTMENT OF COMMERCE
Under the Paperwork Reduction Act of 1995, no persons are required to respond to a collection of information unless it contains a valid OMB control number

Privacy Act Statement

The Privacy Act of 1974 (P.L. 93-579) requires that you be given certain information in connection with your submission of the attached form related to a patent application or patent. Accordingly, pursuant to the requirements of the Act, please be advised that: (1) the general authority for the collection of this information is 35 U.S.C. 2(b)(2); (2) furnishing of the information solicited is voluntary; and (3) the principal purpose for which the information is used by the U.S. Patent and Trademark Office is to process and/or examine your submission related to a patent application or patent. If you do not furnish the requested information, the U.S. Patent and Trademark Office may not be able to process and/or examine your submission, which may result in termination of proceedings or abandonment of the application or expiration of the patent.

The information provided by you in this form will be subject to the following routine uses:

1. The information on this form will be treated confidentially to the extent allowed under the Freedom of Information Act (5 U.S.C. 552) and the Privacy Act (5 U.S.C. 552a). Records from this system of records may be disclosed to the Department of Justice to determine whether the Fr eedom of Information Act requires disclosure of these records.

2. A record from this system of records may be disclosed, as a routine use, in the course of presenting evidence to a court, magistrate, or administrative tribunal, including disclosures to opposing counsel in the course of settlement negotiations.

3. A record in this system of records may be disclosed, as a routine use, to a Member of Congress submitting a request involving an individual, to whom the record pertains, when the individual has requested assistance from the Member with respect to the subject matter of the record.

4. A record in this system of records may be disclosed, as a routine use, to a contractor of the Agency having need for the information in order to perform a contract. Recipients of information shall be required to comply with the requirements of the Privacy Act of 1974, as amended, pursuant to 5 U.S.C. 552a(m).

5. A record related to an International Application filed under the Patent Cooperation Treaty in this system of records may be disclosed, as a routine use, to the International Bureau of the World Intellectual Property Organization, pursuant to the Patent Cooperation Treaty.

6. A record in this system of records may be disclosed, as a routine use, to another federal agency for purposes of National Security review (35 U.S.C. 181) and for review pursuant to the Atomic Energy Act (42 U.S.C. 218(c)).

7. A record from this system of records may be disclosed, as a routine use, to the Administrator, General Services, or his/her designee, during an inspection of records conducted by GSA as part of that agency's responsibility to recommend improvements in records management practices and programs, under authority of 44 U.S.C. 2904 and 2906. Such disclosure shall be made in accordance with the GSA regulations governing inspection of records for this purpose, and any other relevant (i.e., GSA or Commerce) directive. Such disclosure shall not be used to make determinations about indivi duals.

8. A record from this system of records may be disclosed, as a routine use, to the public after either publication of the application pursuant to 35 U.S.C. 122(b) or issuance of a patent pursuant to 35 U.S.C. 151. Further, a record may be disclosed, subject to the limitations of 37 CFR 1.14, as a routine use, to the public if the record was filed in an application which became abandoned or in which the proceedings were terminated and which application is referenced by either a published application, an application open to public inspections or an issued patent.

9. A record from this system of records may be disclosed, as a routine use, to a Federal, State, or local law enforcement agency, if the USPTO becomes aware of a violation or potential violation of law or regulation.

UNITED STATES PATENT AND TRADEMARK OFFICE

Commissioner for Patents
United States Patent and Trademark Office
P.O. Box 1450
Alexandria, VA 22313-1450
www.uspto.gov

Casimir Jones, S.C.
2275 Deming Way, Suite 310
Madison WI 53562

MAILED
FEB 13 2012
OFFICE OF PETITIONS

In re Application of :
David J. Ecker et al. :
Application No. 12/616,422 : DECISION ON PETITION
Filed: November 11, 2009 :
Attorney Docket No. :
DIBIS0075USC1/13055US2CON

This is a decision on the petition under the unintentional provisions of 37 CFR 1.137(b), filed January 9, 2012, to revive the above-identified application.

The petition is **GRANTED**.

The application became abandoned for failure to timely file a reply within the meaning of 37 CFR 1.113 to the final Office action of June 14, 2011. The proposed reply required for consideration of a petition to revive must be a Notice of Appeal (and appeal fee required by 37 CFR 41.20(b)(2), an amendment that *prima facie* places the application in condition for allowance, a Request for Continued Examination and submission (37 CFR 1.114), or the filing of a continuing application under 37 CFR 1.53(b). See MPEP 711.03(c)(III)(A)(2). No extensions of time pursuant to the provisions of 37 CFR 1.136(a) were obtained. Accordingly, the date of abandonment of this application is September 15, 2011.

The petition satisfies the requirements of 37 CFR 1.137(b) in that petitioner has supplied (1) the reply in the form of a Request for Continued Examination (RCE) and fee of $930, and the submission required by 37 CFR 1.114; (2) the petition fee of $1,860; and (3) a proper statement of unintentional delay.

An extension of time under 37 CFR 1.136 must be filed prior to the expiration of the maximum extendable period for reply. *See* In re Application of S., 8 USPQ2d 1630, 1631 (Comm'r Pats. 1988). Since the $1,270 extension of time fee submitted with the petition on January 9, 2012 was subsequent to the

maximum extendable period for reply, this fee is unnecessary and will be credited to petitioner's deposit account.

Telephone inquiries concerning this decision should be directed to the undersigned at (571) 272-4584.

This application is being referred to Technology Center AU 1637 for processing of the RCE and for appropriate action by the Examiner in the normal course of business on the amendment submitted in accordance with 37 CFR 1.114.

JoAnne Burke
Petitions Examiner
Office of Petitions

Doc Code: PET.AUTO **Document Description: Petition automatically granted by EFS-Web**	PTO/SB/83 U.S. Patent and Trademark Office Department of Commerce

Electronic Petition Request	**REQUEST FOR WITHDRAWAL AS ATTORNEY OR AGENT AND CHANGE OF CORRESPONDENCE ADDRESS**
Application Number	12616435
Filing Date	11-Nov-2009
First Named Inventor	TRACE CAWLEY
Art Unit	3733
Examiner Name	SUMMER KOSTELNIK
Attorney Docket Number	33939/37
Title	FACET DISTRACTION DEVICE, FACET JOINT IMPLANT, AND ASSOCIATED METHODS

◉ Please withdraw me as attorney or agent for the above identified patent application and the practitioners of record associated with Customer Number: 32642

The reason(s) for this request are those described in 37 CFR:

10.40(b)(4)

Certifications

☒ I/We have given reasonable notice to the client, prior to the expiration of the response period, that the practitioner(s) intend to withdraw from employment

☒ I/We have delivered to the client or a duly authorized representative of the client all papers and property (including funds) to which the client is entitled

☒ I/We have notified the client of any responses that may be due and the time frame within which the client must respond

Change the correspondence address and direct all future correspondence to:
The address of the first named inventor or assignee that has properly made itself of record pursuant to 37 CFR 3.71, associated with Customer Number: 102983

I am authorized to sign on behalf of myself and all withdrawing practitioners.

Signature	/R. Whitney Johnson/
Name	R. Whitney Johnson
Registration Number	62997

UNITED STATES PATENT AND TRADEMARK OFFICE

Commissioner for Patents
United States Patent and Trademark Office
P.O. Box 1450
Alexandria, VA 22313-1450
www.uspto.gov

Decision Date : February 13, 2012

In re Application of :

TRACE CAWLEY

Application No : 12616435

Filed : 11-Nov-2009

Attorney Docket No : 33939/37

DECISION ON REQUEST TO WITHDRAW AS ATTORNEY/AGENTOF RECORD

This is an electronic decision on the Request to Withdraw as attorney or agent of record under 37 CFR§ 1.36(b), filed February 13, 2012

The request is **APPROVED**

The request was signed by R. Whitney Johnson (registration no. 62997) on behalf of all attorneys/agents associated with Customer Number 32642 . All attorneys/agents associated with Customer Number 32642 have been withdrawn.

Since there are no remaining attorneys of record, all future communications from the Office will be directed to the first named inventor or assignee that has properly made itself of record pursuant to 37 CFR 3.71, with Customer number 102983 .

As a reminder, requester is required to inform the first named inventor or assignee that has properly made itself of record pursuant to 37 CFR 3.71 of the electronically processed petition.

Telephone inquiries concerning this decision should be directed to the Patent Electronic Business Center (EBC) at 866-217-9197.

Office of Petitions

UNITED STATES PATENT AND TRADEMARK OFFICE

Commissioner for Patents
United States Patent and Trademark Office
P.O. Box 1450
Alexandria, VA 22313-1450
www.uspto.gov

PATENT GROUP 2N
JONES DAY
NORTH POINT
901 LAKESIDE AVENUE
CLEVELAND OH 44114

MAILED

DEC 20 2010

OFFICE OF PETITIONS

In re Application of :
GIFFORD, David K. :
Application No. 12/616,440 : DECISION ON PETITION
Filed: November 11, 2009 : TO WITHDRAW
Attorney Docket No. **432383-600087** : FROM RECORD
:

This is a decision on the Request to Withdraw as attorney or agent of record under 37 C.F.R. § 1.36(b), filed November 19, 2010.

The request is **APPROVED**.

A grantable request to withdraw as attorney/agent of record must be signed by every attorney/agent seeking to withdraw or contain a clear indication that one attorney is signing on behalf of another/others. The Office requires the practitioner(s) requesting withdrawal to certify that he, she, or they have: (1) given reasonable notice to the client, prior to the expiration of the response period, that the practitioner(s) intends to withdraw from employment; (2) delivered to the client or a duly authorized representative of the client all papers and property (including funds) to which the client is entitled; and (3) notified the client of any responses that may be due and the time frame within which the client must respond, pursuant 37 CFR 10.40(c).

The request was signed by David B. Cochran on behalf of all attorneys of record who are associated with customer No. 24325. All attorneys/agents associated have been withdrawn. Applicant is reminded that there is no attorney of record at this time.

All future correspondence will be directed to the address indicated below.

There are no outstanding Office actions at this time.

Telephone inquiries concerning this decision should be directed to the undersigned at 571-272-4231.

Michelle R. Eason
Paralegal Specialist
Office of Petitions

cc: **SOVERAIN SOFTWARE LLC**
233 S. WACKER DRIVE, SUITE 9425
CHICAGO, IL 60606

UNITED STATES PATENT AND TRADEMARK OFFICE

UNITED STATES DEPARTMENT OF COMMERCE
United States Patent and Trademark Office
Address: COMMISSIONER FOR PATENTS
P.O. Box 1450
Alexandria, Virginia 22313-1450
www.uspto.gov

APPLICATION NO.	FILING DATE	FIRST NAMED INVENTOR	ATTORNEY DOCKET NO.	CONFIRMATION NO.
12/616,446	11/11/2009	Gino COCCHI	20545-0603	2531

7590 10/18/2011

SHUTTLEWORTH & INGERSOLL, P.L.C.
115 3RD STREET SE, SUITE 500
P.O. BOX 2107
CEDAR RAPIDS, IA 52406

EXAMINER	
TYLER, CHERYL JACKSON	
ART UNIT	**PAPER NUMBER**
3744	
NOTIFICATION DATE	**DELIVERY MODE**
10/18/2011	ELECTRONIC

DECISION GRANTING PETITION UNDER 37 CFR 1.138(d)

The declaration of express abandonment is recognized

This is in response to the petition under 37 CFR 1.138(d), requesting for a refund of any previously paid search fee and excess claims fee in the above-identified application.

The petition is granted.

The express abandonment is recognized. Any previously paid search fee and excess claims fee are hereby refunded.

Telephone inquiries should be directed to the Office of Data Management at (571) 272-4200.

Betty Powell

Patent Publication Branch
Office of Data Management

UNITED STATES PATENT AND TRADEMARK OFFICE

Commissioner for Patents
United States Patent and Trademark Office
P.O. Box 1450
Alexandria, VA 22313-1450
www.uspto.gov

GIBBONS P.C.
ONE GATEWAY CENTER
NEWARK NJ 07102

MAILED

OCT 12 2010

OFFICE OF PETITIONS

In re Application of :
Jallad, et al. : ON PETITION
Application No.: 12/616,493 :
Filed: November 11, 2009 :
Attorney Docket No.: 107450-67451 :

This is a decision on the renewed petition under 37 CFR 1.47(a), filed August 10, 2010.

The petition is **DISMISSED**.

Any request for reconsideration of this decision must be submitted within TWO (2) MONTHS from the mail date of this decision. Extensions of time under 37 CFR 1.136(a) are permitted. Any response should be entitled "Request for Reconsideration of Petition Under 37 CFR 1.47(a)" and may include an oath or declaration executed by the inventors. **Failure to respond will result in abandonment of the application.**

A grantable petition under 37 CFR 1.47(a) requires:

(1) a petition including proof of the pertinent facts establishing that the joint inventor(s) refuses to join, or cannot be found or reached after diligent effort,
(2) a proper oath or Declaration executed by the available joint inventor(s),
(3) the petition fee of $200, and
(4) the last known address of the omitted inventor(s).

This petition lacks item (2) above.

As to item (2), an oath or declaration for the patent application in compliance with 37 CFR 1.63 and 1.64 still has not been presented. The citizenships of the non-signing inventors are not included on the declaration. The citizenship of each inventor must be included **on the oath or declaration**. As listing the citizenship for each inventor is a statutory requirement under 35 U.S.C. 115, it cannot be waived.

The signing inventors must execute another declaration contains the signers' and the non-signers' complete information, including citizenship.

An oath or declaration in compliance with 37 CFR 1.63 and 1.64 signed by the Rule 1.47 applicants on behalf of the non-signing inventor is REQUIRED. See MPEP 409.03(a).

Further correspondence with respect to this matter should be delivered through one of the following mediums:

By mail:	Mail Stop PETITIONS Commissioner for Patents Post Office Box 1450 Alexandria, VA 22313-1450
By hand:	Customer Service Window Mail Stop Petitions Randolph Building 401 Dulany Street Alexandria, VA 22314
By fax:	(571) 273-8300 ATTN: Office of Petitions
By internet:	EFS-Web www.uspto.gov/ebc/efs_help.html (for help using EFS-Web call the Patent Electronic Business Center at (866) 217-9197)

Telephone inquiries should be directed to the undersigned at (571) 272-3230.

Shirene Willis Brantley

Shirene Willis Brantley
Senior Petitions Attorney
Office of Petitions

UNITED STATES PATENT AND TRADEMARK OFFICE

Commissioner for Patents
United States Patent and Trademark Office
P.O. Box 1450
Alexandria, VA 22313-1450
www.uspto.gov

GIBBONS P.C.
ONE GATEWAY CENTER
NEWARK NJ 07102

MAILED
JAN 25 2011
OFFICE OF PETITIONS

In re Application of :
Jallad, et al. : ON PETITION
Application No.: 12/616,493 :
Filed: November 11, 2009 :
Attorney Docket No.: 107450-67451 :

This is a decision on the renewed petition under 37 CFR 1.47(a), filed November 19, 2010.

The petition is **GRANTED**.

Petitioners have shown that the non-signing inventors, Jallad, Stach, and Terrill, have constructively refused to join in the filing of the above-identified application.

The application and papers have been reviewed and found in compliance with 37 CFR 1.47(a). This application is hereby accorded Rule 1.47(a) status.

As provided in 37 CFR 1.47(c), this Office will forward notice of this application's filing to the non-signing inventor at the address given in the petition. Notice of the filing of this application will also be published in the Official Gazette.

This application is being referred to the Office of Patent Application Processing for further pre-examination processing.

Telephone inquiries should be directed to the undersigned at (571) 272-3230.

Shirene Willis Brantley
Senior Petitions Attorney
Office of Petitions

UNITED STATES PATENT AND TRADEMARK OFFICE

Commissioner for Patents
United States Patent and Trademark Office
P.O. Box 1450
Alexandria, VA 22313-1450
www.uspto.gov

Decision Date : December 5, 2011

In re Application of :

IVAN FREYRE

Application No : 12616525

Filed : 11-Nov-2009

Attorney Docket No : IF01-02U

DECISION ON REQUEST TO WITHDRAW AS ATTORNEY/AGENTOF RECORD

This is an electronic decision on the Request to Withdraw as attorney or agent of record under 37 CFR § 1.36(b), filed December 5, 2011

The request is **APPROVED.**

The request was signed by Kirk A Buhler (registration no. 52670) on behalf of all attorneys/agents associated with Customer Number 37038 . All attorneys/agents associated with Cusotmer Number 37038 have been withdrawn.

Since there are no remaining attorneys of record, all future communications from the Office will be directed to the first named inventor or assignee that has properly made itself of record pursuant to 37 CFR 3.71, with correspondence address:

Name	Ivan J. Fretre
Name2	
Address 1	8213 White Oak Ave
Address 2	
City	Rancho Cucamonga
State	CA
Postal Code	91730
Country	US

As a reminder, requester is required to inform the first named inventor or assignee that has properly made itself of record pursuant to 37 CFR 3.71 of the electronically processed petition.

Telephone inquiries concerning this decision should be directed to the Patent Electronic Business Center (EBC) at 866-217-9197.

Office of Petitions

Doc Code: PET.AUTO **Document Description: Petition automatically granted by EFS-Web**	PTO/SB/83 U.S. Patent and Trademark Office Department of Commerce

Electronic Petition Request	**REQUEST FOR WITHDRAWAL AS ATTORNEY OR AGENT AND CHANGE OF CORRESPONDENCE ADDRESS**
Application Number	12616525
Filing Date	11-Nov-2009
First Named Inventor	IVAN FREYRE
Art Unit	3753
Examiner Name	DAVID COLON MORALES
Attorney Docket Number	IF01-02U
Title	STEPPED FLOW CONTROL VALVE

◉ Please withdraw me as attorney or agent for the above identified patent application and the practitioners of record associated with Customer Number: 37038

The reason(s) for this request are those described in 37 CFR:

10.40(c)(1)(vi)

Certifications

☒ I/We have given reasonable notice to the client, prior to the expiration of the response period, that the practitioner(s) intend to withdraw from employment

☒ I/We have delivered to the client or a duly authorized representative of the client all papers and property (including funds) to which the client is entitled

☒ I/We have notified the client of any responses that may be due and the time frame within which the client must respond

Change the correspondence address and direct all future correspondence to the first named inventor or assignee that has properly made itself of record pursuant to 37 CFR 3.71:

Name	Ivan J. Fretre
Address	8213 White Oak Ave
City	Rancho Cucamonga
State	CA
Postal Code	91730
Country	US

I am authorized to sign on behalf of myself and all withdrawing practitioners.	
Signature	/Kirk A Buhler/
Name	Kirk A Buhler
Registration Number	52670

UNITED STATES PATENT AND TRADEMARK OFFICE

Commissioner for Patents
United States Patent and Trademark Office
P.O. Box 1450
Alexandria, VA 22313-1450
www.uspto.gov

Decision Date : June 23,2011

In re Application of :

Basavaraja Teli

DECISION ON PETITION

UNDER CFR 1.313(c)(2)

Application No : 12616623

Filed : 11-Nov-2009

Attorney Docket No : H00021914-1326.1138101

This is an electronic decision on the petition under 37 CFR 1.313(c)(2), filed June 23,2011 , to withdraw the above-identified application from issue after payment of the issue fee.

The petition is **GRANTED.**

The above-identified application is withdrawn from issue for consideration of a submission under 37 CFR 1.114 (request for continued examination). See 37 CFR 1.313(c)(2).

Petitioner is advised that the issue fee paid in this application cannot be refunded. If, however, this application is again allowed, petitioner may request that it be applied towards the issue fee required by the new Notice of Allowance.

Telephone inquiries concerning this decision should be directed to the Patent Electronic Business Center (EBC) at 866-217-9197.

This application file is being referred to Technology Center AU 2855 for processing of the request for continuing examination under 37 CFR 1.114 .

Office of Petitions

Doc Code: PET.AUTO Document Description: Petition automatically granted by EFS-Web	PTO/SB/140 U.S. Patent and Trademark Office Department of Commerce

Electronic Petition Request	**PETITION TO WITHDRAW AN APPLICATION FROM ISSUE AFTER PAYMENT OF THE ISSUE FEE UNDER 37 CFR 1.313(c)**
Application Number	12616623
Filing Date	11-Nov-2009
First Named Inventor	Basavaraja Teli
Art Unit	2855
Examiner Name	ANDRE ALLEN
Attorney Docket Number	H00021914-1326.1138101
Title	PRESSURE SENSOR ASSEMBLY

An application may be withdrawn from issue for further action upon petition by the applicant. To request that the Office withdraw an application from issue, applicant must file a petition under this section including the fee set forth in § 1.17(h) and a showing of good and sufficient reasons why withdrawal of the application from issue is necessary.

APPLICANT HEREBY PETITIONS TO WITHDRAW THIS APPLICATION FROM ISSUE UNDER 37 CFR 1.313(c).

A grantable petition requires the following items:
(1) Petition fee; and
(2) One of the following reasons:
(a) Unpatentability of one or more claims, which must be accompanied by an unequivocal statement that one or more claims are unpatentable, an amendment to such claim or claims, and an explanation as to how the amendment causes such claim or claims to be patentable;
(b) Consideration of a request for continued examination in compliance with § 1.114 (for a utility or plant application only); or
(c) Express abandonment of the application. Such express abandonment may be in favor of a continuing application, but not a CPA under 37 CFR 1.53(d).

Petition Fee

☐ Applicant claims SMALL ENTITY status. See 37 CFR 1.27.

☐ Applicant is no longer claiming SMALL ENTITY status. See 37 CFR 1.27(g)(2).

☐ Applicant(s) status remains as SMALL ENTITY.

☒ Applicant(s) status remains as other than SMALL ENTITY

Reason for withdrawal from issue

◯ One or more claims are unpatentable ◉ Consideration of a request for continued examination (RCE) (List of Required Documents and Fees) ◯ Applicant hereby expressly abandons the instant application (any attorney/agent signing for this reason must have power of attorney pursuant to 37 CFR 1.32(b)).
RCE request,submission, and fee. ☐ I certify, in accordance with 37 CFR 1.4(d)(4) that : The RCE request ,submission, and fee have already been filed in the above-identified application on ☒ Are attached.
THIS PORTION MUST BE COMPLETED BY THE SIGNATORY OR SIGNATORIES I certify, in accordance with 37 CFR 1.4(d)(4) that I am: ◉ An attorney or agent registered to practice before the Patent and Trademark Office who has been given power of attorney in this application. ◯ An attorney or agent registered to practice before the Patent and Trademark Office, acting in a representative capacity. ◯ A sole inventor ◯ A joint inventor; I certify that I am authorized to sign this submission on behalf of all of the inventors ◯ A joint inventor; all of whom are signing this e-petition ◯ The assignee of record of the entire interest that has properly made itself of record pursuant to 37 CFR 3.71

Signature	/brian n tufte/
Name	Brian N Tufte
Registration Number	38638

UNITED STATES PATENT AND TRADEMARK OFFICE

Commissioner for Patents
United States Patent and Trademark Office
P.O. Box 1450
Alexandria, VA 22313-1450
www.uspto.gov

ROUND
LERNER, DAVID, LITTENBERG, KRUMHOLZ & MENTLIK, LLP
600 SOUTH AVENUE WEST
WESTFIELD NJ 07090

MAILED

DEC 06 2010

OFFICE OF PETITIONS

In re Application of	:	
Jim McKeeth	:	DECISION ON PETITION
Application No. 12/616,668	:	TO WITHDRAW
Filed: November 11, 2009	:	FROM RECORD
Attorney Docket No. **MTIPAT.189C1C1**	:	

This is a decision on the request to withdraw as attorney of record under 37 CFR § 1.36(b), filed November 23, 2010.

The request is **NOT APPROVED**.

The request cannot be approved because it lacks the name of the first inventor or the assignee of record that is associated with the address listed in the request. Therefore, the change of correspondence address is considered improper.

The Office will only accept correspondence address changes to the most current address information provided for the assignee of the entire interest *who properly became of record under 37 CFR 3.71,* or, if no assignee of the entire interest has properly been made of record, the most current address information provided for the first named inventor. 37 CFR 3.71(c) states:

> *An assignee becomes of record either in a national patent application or a reexamination proceeding by filing a statement in compliance with § 3.73(b) that is signed by a party who is authorized to act on behalf of the assignee.*

The assignee must establish its ownership of the patent to the satisfaction of the Director. In this regard, the statement under 37 CFR 3.73(b) must have either: (i) documentary evidence of a chain of title from the original owner to the assignee (*e.g.*, copy of an executed assignment), and a statement affirming that the documentary evidence of the chain of title from the original owner to the assignee was or concurrently is being submitted for recordation pursuant to § 3.11; or (ii) a statement specifying where documentary evidence of a chain of title from the original owner to the assignee is recorded in the assignment records of the Office (*e.g.*, reel and frame number).

All future communications from the Office will continue to be directed to the above-listed address until otherwise notified by applicant.

Telephone inquires concerning this decision should be directed to the undersigned at (571) 272-4584.

/JoAnne Burke/
JoAnne Burke
Petitions Examiner
Office of Petitions

UNITED STATES PATENT AND TRADEMARK OFFICE

Commissioner for Patents
United States Patent and Trademark Office
P.O. Box 1450
Alexandria, VA 22313-1450
www.uspto.gov

ROUND
LERNER, DAVID, LITTENBERG, KRUMHOLZ & MENTLIK, LLP
600 SOUTH AVENUE WEST
WESTFIELD NJ 07090

MAILED

JAN 13 2011

OFFICE OF PETITIONS

In re Application of :
Jim McKeeth :
Application No. 12/616,668 :
Filed: November 11, 2009 :
Attorney Docket No. **MTIPAT.189C1C1** :

DECISION ON PETITION
TO WITHDRAW
FROM RECORD

This is a decision on the request to withdraw as attorney of record under 37 CFR § 1.36(b), filed December 10, 2010.

The request is **APPROVED**.

A grantable request to withdraw as attorney/agent of record must be signed by every attorney/agent seeking to withdraw or contain a clear indication that one attorney is signing on behalf of another/others. The Office requires the practitioner(s) requesting withdrawal to certify that he, she, or they have: (1) given reasonable notice to the client, prior to the expiration of the response period, that the practitioner(s) intends to withdraw from employment; (2) delivered to the client or a duly authorized representative of the client all papers and property (including funds) to which the client is entitled; and (3) notified the client of any responses that may be due and the time frame within which the client must respond , pursuant to 37 CFR 10.40.

The request was signed by Richard J. Botos on behalf of all attorneys of record who are associated with Customer Number 58907.

All attorneys/agents associated with Customer Number 58907 have been withdrawn.

Applicant is reminded that there is no attorney of record at this time.

The correspondence address of record has been changed and all future correspondence will be directed to the assignee of the entire interest at the address indicated below.

There is no outstanding Office action mailed that requires a reply from the applicant.

Telephone inquiries concerning this decision should be directed to the undersigned at 571-272-4584.

/JoAnne Burke/
JoAnne Burke
Petitions Examiner
Office of Petitions

cc: Round rock Research, LLC
26 Deer Creek Lane
Mt. Kisco, NY 10549

UNITED STATES PATENT AND TRADEMARK OFFICE

UNITED STATES DEPARTMENT OF COMMERCE
United States Patent and Trademark Office
Address: COMMISSIONER FOR PATENTS
P.O. Box 1450
Alexandria, Virginia 22313-1450
www.uspto.gov

APPLICATION NUMBER	FILING OR 371(C) DATE	FIRST NAMED APPLICANT	ATTY. DOCKET NO./TITLE
12/616,668	11/11/2009	Jim McKeeth	MTIPAT.189C1C1

CONFIRMATION NO. 2993

58907
ROUND
LERNER, DAVID, LITTENBERG, KRUMHOLZ & MENTLIK, LLP
600 SOUTH AVENUE WEST
WESTFIELD, NJ 07090

POWER OF ATTORNEY NOTICE

OC000000045185260

Date Mailed: 12/29/2010

NOTICE REGARDING CHANGE OF POWER OF ATTORNEY

This is in response to the Power of Attorney filed 12/10/2010.

- The withdrawal as attorney in this application has been accepted. Future correspondence will be mailed to the new address of record. 37 CFR 1.33.

/jlburke/

Office of Data Management, Application Assistance Unit (571) 272-4000, or (571) 272-4200, or 1-888-786-0101

UNITED STATES PATENT AND TRADEMARK OFFICE

Commissioner for Patents
United States Patent and Trademark Office
P.O. Box 1450
Alexandria, VA 22313-1450
www.uspto.gov

SCHWABE, WILLIAMSON & WYATT, P.C.
1420 FIFTH, SUITE 3400
SEATTLE WA 98101-4010

MAILED

OCT 18 2010

OFFICE OF PETITIONS

In re Application of :
RéBlewski et al. :
Application No. 12/616,682 :
Filed: November 11, 2009 :
Attorney Docket No. 109893-168113 :

DECISION ON PETITION
TO WITHDRAW
FROM RECORD

This is a decision on the Request to Withdraw as attorney or agent of record under 37 C.F.R. § 1.36(b), filed September 29, 2010.

The request is **NOT APPROVED**.

The Office will only accept correspondence address changes to the most current address information provided for the assignee of the entire interest *who properly became of record under 37 CFR 3.71,* or, if no assignee of the entire interest has properly been made of record, the most current address information provided for the first named inventor. 37 CFR 3.71(c) states:

> ***An assignee becomes of record either in a national patent application or a reexamination proceeding by filing a statement in compliance with § 3.73(b) that is signed by a party who is authorized to act on behalf of the assignee.***

Therefore, as there is currently no Statement under 37 CFR 3.73(b) of record in the instant application, the Office cannot change the correspondence address to the address on the Request to Withdraw.

All future communications from the Office will continue to be directed to the above-listed address until otherwise notified by applicant.

Currently, there is an outstanding Office action mailed September 28, 2010 that requires a reply.

Telephone inquires concerning this decision should be directed to the undersigned at (571) 272-7751.

Joan Olszewski
Petitions Examiner
Office of Petitions

UNITED STATES PATENT AND TRADEMARK OFFICE

Commissioner for Patents
United States Patent and Trademark Office
P.O. Box 1450
Alexandria, VA 22313-1450
www.uspto.gov

SCHWABE, WILLIAMSON & WYATT, P.C.
1420 FIFTH AVENUE, SUITE 3400
SEATTLE WA 98101-4010

MAILED

NOV 05 2010

OFFICE OF PETITIONS

In re Application of :
Réblewski et al. :
Application No. 12/616,682 : DECISION ON PETITION
Filed: November 11, 2009 TO WITHDRAW FROM RECORD
Attorney Docket No. 109893-168113 :
:

This is a decision on the renewed Request to Withdraw as attorney or agent of record under 37 C.F.R. § 1.36(b), filed October 25, 2010.

The request is **APPROVED**.

A grantable request to withdraw as attorney/agent of record must be signed by every attorney/agent seeking to withdraw or contain a clear indication that one attorney is signing on behalf of another/others. The Office will require the practitioner(s) to certify that he, she or they have: (1) given reasonable notice to the client, prior to the expiration of the reply period, which the practitioner(s) intends to withdraw from employment; (2) delivered to the client or a duly authorized representative of the client all papers and property (including funds) to which the client is entitled; and (3) notified the client of any replies that may be due and the time frame within which the client must respond, pursuant to 37 CFR 10.40 (c).

The request was signed by Al AuYeung on behalf of all attorneys of record who are associated with Customer Number 60172.

All attorneys/agents associated with the Customer Number 60172 have been withdrawn. Applicant is reminded that there is no attorney of record at this time.

All future correspondence will be directed to the first named inventor at the address indicated below.

Currently, there is an outstanding Office action mailed September 28, 2010 that requires a reply.

Telephone inquiries concerning this decision should be directed to the undersigned at (571) 272-7751. All other inquires concerning either the examination or status of the application should be directed to the Technology Center.

Joan Olszewski
Petitions Examiner
Office of Petitions

cc: Frédéric Réblewski
26 rue Fabert
Paris, FR 75007

UNITED STATES PATENT AND TRADEMARK OFFICE

Commissioner for Patents
United States Patent and Trademark Office
P.O. Box 1450
Alexandria, VA 22313-1450
www.uspto.gov

KILPATRICK TOWNSEND & STOCKTON LLP
TWO EMBARCADERO CENTER
EIGHTH FLOOR
SAN FRANCISCO CA 94111-3834

MAILED

MAY 27 2011

OFFICE OF PETITIONS

In re Application of :

DE VILLIERS, Malan et al. :
Application No. 12/616,697 : DECISION ON PETITION
Filed: November 11, 2009 : TO WITHDRAW
Attorney Docket No. **022031-000910US** : FROM RECORD
:

This is a decision on the Request to Withdraw as attorney or agent of record under 37 C.F.R. § 1.36(b), filed May 18, 2011.

The request is **NOT APPROVED**.

The Office has revised its change in procedure for request to withdraw from representation applies to requests filed on or after May 12, 2008.

The Office will no longer accept address changes to a new practitioner or law firm filed with a Request, absent the filing of a power of attorney to the new representative. The Office will either change the correspondence address of record to the most current address information provided for the assignee of the entire interest who properly became of record under 37 CFR 3.71 or, if no assignee of the entire interest has properly been made of record under 37 CFR 3.71, the most current address information provided for the first named inventor.

Accordingly, the request to withdraw from record cannot be approved because the request to change the correspondence address is not that of: (1) the first named inventor; or (2) an assignee of the entire interest under 37 C.F.R 3.71 who has properly intervened.

If an assignee has intervened in this application, then an updated Statement under 37 CFR 3.73(b) or a copy of the actual assignment must be submitted with a renewed request.

All future communications from the Office will continue to be directed to the above-listed address until otherwise notified by applicant.

Telephone inquiries concerning this decision should be directed to Tredelle Jackson at 571-272- 2783.

/Tredelle D. Jackson/
Paralegal Specialist
Office of Petitions

cc: **WILSON, SONSINI, GOODRICH & ROSATI**
650 PAGE MILL ROAD
PALO ALTO, CA 94304-1050

UNITED STATES PATENT AND TRADEMARK OFFICE

Commissioner for Patents
United States Patent and Trademark Office
P.O. Box 1450
Alexandria, VA 22313-1450
www.uspto.gov

MAILED

JUN 02 2011

OFFICE OF PETITIONS

LADAS & PARRY
5670 WILSHIRE BOULEVARD, SUITE 2100
LOS ANGELES CA 90036-5679

In re Application of :
Michael G. Fisher et al. :
Application No. 12/616,747 :
Filed: November 11, 2009 :
Attorney Docket No. **B-6662PCT 625425-9** :

DECISION ON PETITION
TO WITHDRAW
FROM RECORD

This is a decision on the request to withdraw as attorney of record under 37 CFR § 1.36(b), filed May 20, 2011.

The request is **NOT APPROVED**.

The request cannot be approved because it lacks the name of the first inventor or the assignee of record that is associated with the address listed in the request. Therefore, the change of correspondence address is considered improper.

I would like to bring to petitioner attention that the Office no longer accepts address changes to a new practitioner/customer number or law firm absent the filing of a power of attorney to the new representative.

The Office will only accept correspondence address changes to the most current address information provided for the assignee of the entire interest *who properly became of record under 37 CFR 3.71,* or, if no assignee of the entire interest has properly been made of record, the most current address information provided for the first named inventor. 37 CFR 3.71(c) states:

> *An assignee becomes of record either in a national patent application or a reexamination proceeding by filing a statement in compliance with § 3.73(b) that is signed by a party who is authorized to act on behalf of the assignee.*

The assignee must establish its ownership of the patent to the satisfaction of the Director. In this regard, the statement under 37 CFR 3.73(b) must have either: (i) documentary evidence of a chain of title from the original owner to the assignee (*e.g.*, copy of an executed assignment), and a statement affirming that the documentary evidence of the chain of title from the original owner to the assignee was or concurrently is being submitted for recordation pursuant to § 3.11; or (ii) a statement specifying where documentary evidence of a chain of title from the original owner to the assignee is recorded in the assignment records of the Office (*e.g.*, reel and frame number).

All future communications from the Office will continue to be directed to the above-listed address until otherwise notified by applicant.

Telephone inquires concerning this decision should be directed to the undersigned at (571) 272-4584.

JoAnne Burke
Petitions Examiner
Office of Petitions

UNITED STATES PATENT AND TRADEMARK OFFICE

Commissioner for Patents
United States Patent and Trademark Office
P.O. Box 1450
Alexandria, VA 22313-1450
www.uspto.gov

CRAIG W. KRONENTHAL
1 CUOMO CT.
MILLSTONE TWP. NJ 08535

MAILED

AUG 18 2011

OFFICE OF PETITIONS

In re Application of	:	
WALLACE, et al	:	
Application No. 12/616,776	:	DECISION ON PETITION
Filed: November 11, 2009	:	TO WITHDRAW
Attorney Docket No. 09-08F1000	:	FROM RECORD
	:	

This is a decision on the Request to Withdraw as attorney or agent of record under 37 C.F.R. § 1.36(b), filed July 12, 2011.

The request is **APPROVED**.

A grantable request to withdraw as attorney/agent of record must be signed by every attorney/agent seeking to withdraw or contain a clear indication that one attorney is signing on behalf of another/others. The Office requires the practitioner(s) requesting withdrawal to certify that he, she, or they have: (1) given reasonable notice to the client, prior to the expiration of the response period, that the practitioner(s) intends to withdraw from employment; (2) delivered to the client or a duly authorized representative of the client all papers and property (including funds) to which the client is entitled; and (3) notified the client of any responses that may be due and the time frame within which the client must respond, pursuant 37 CFR 10.40(c).

The request was signed by Craig W. Kronenthal on behalf of the attorneys of record associated with Customer No. 90866.

The attorneys of record associated with Customer No. 90866 have been withdrawn.

Applicant is reminded that there is no attorney of record at this time.

The correspondence address of record has been changed and the new correspondence address is the address indicated below until otherwise properly notified.

Telephone inquiries concerning this decision should be directed to the undersigned at (571) 272-6735.

/Diane C. Goodwyn/
Diane C.Goodwyn
Petitions Examiner
Office of Petitions

cc: COLLIN D. WALLACE
213 NORTH RACINE AVE, SUITE 101
CHICAGO IL 60607

UNITED STATES PATENT AND TRADEMARK OFFICE

UNITED STATES DEPARTMENT OF COMMERCE
United States Patent and Trademark Office
Address: COMMISSIONER FOR PATENTS
P.O. Box 1450
Alexandria, Virginia 22313-1450
www.uspto.gov

APPLICATION NUMBER	FILING OR 371(C) DATE	FIRST NAMED APPLICANT	ATTY. DOCKET NO./TITLE
12/616,776	11/11/2009	Collin D. Wallace	09-08F1000

CONFIRMATION NO. 3271

90866
Craig W. Kronenthal
1 Cuomo Ct.
Millstone Twp., NJ 08535

POWER OF ATTORNEY NOTICE

OC000000049015287

Date Mailed: 07/28/2011

NOTICE REGARDING CHANGE OF POWER OF ATTORNEY

This is in response to the Power of Attorney filed 07/12/2011.

- The withdrawal as attorney in this application has been accepted. Future correspondence will be mailed to the new address of record. 37 CFR 1.33.

/dcgoodwyn/

Office of Data Management, Application Assistance Unit (571) 272-4000, or (571) 272-4200, or 1-888-786-0101

UNITED STATES PATENT AND TRADEMARK OFFICE

Commissioner for Patents
United States Patent and Trademark Office
P.O. Box 1450
Alexandria, VA 22313-1450
www.uspto.gov

NAVAL RESEARCH LABORATORY
ASSOCIATE COUNSEL (PATENTS)
CODE 1008.2
4555 OVERLOOK AVENUE, S.W.
WASHINGTON, DC 20375-5320

MAILED

OCT 18 2010

OFFICE OF PETITIONS

In re Application of :

Matthew Laskoskil, et al. :
Application No. 12/616,836 : DECISION ON PETITION
Filed: November 12, 2009 : TO MAKE SPECIAL UNDER
Attorney Docket No. 995531-US1 : 37 CFR 1.102(c)(1)
:

This is a decision on the petition under 37 CFR 1.102(c)(1), filed September 9, 2010, to make the above-identified application special based on applicant's age as set forth in M.P.E.P. § 708.02, Section IV.

The petition is **GRANTED**.

A grantable petition to make an application special under 37 CFR 1.102(c)(1) and MPEP § 708.02, Section IV: Applicant's Age must be accompanied by evidence showing that at least one of the applicants is 65 years of age, or more, such as a birth certificate or a statement by applicant. No fee is required

The instant petition includes a statement signed by applicant Teddy M. Keller. Accordingly, the above-identified application has been accorded "special" status.

Telephone inquiries concerning this decision should be directed to undersigned at 571-272-1642.

All other inquiries concerning either the examination or status of the application should be directed to the Technology Center.

The application is being forwarded to the Technology Center Art Unit 1793 for action on the merits commensurate with this decision.

/AMW/
April M. Wise
Petitions Examiner
Office of Petitions

UNITED STATES PATENT AND TRADEMARK OFFICE

UNITED STATES DEPARTMENT OF COMMERCE
United States Patent and Trademark Office
Address: COMMISSIONER FOR PATENTS
P.O. Box 1450
Alexandria, Virginia 22313-1450
www.uspto.gov

APPLICATION NO.	FILING DATE	FIRST NAMED INVENTOR	ATTORNEY DOCKET NO.	CONFIRMATION NO.
12/616,867	11/12/2009	Alfons Kruse	24605	3492

535 7590 07/25/2011

KF ROSS PC
311 East York Street
Savannah, GA 31401

EXAMINER	
PASCUA, JES F	
ART UNIT	PAPER NUMBER
3782	

NOTIFICATION DATE	DELIVERY MODE
07/25/2011	ELECTRONIC

Please find below and/or attached an Office communication concerning this application or proceeding.

The time period for reply, if any, is set in the attached communication.

Notice of the Office communication was sent electronically on above-indicated "Notification Date" to the following e-mail address(es):

EMAIL@KFRPC.COM
ereyes@kfrpc.com

UNITED STATES PATENT AND TRADEMARK OFFICE

Commissioner for Patents
United States Patent and Trademark Office
P.O. Box 1450
Alexandria, VA 22313-1450
www.uspto.gov

KF ROSS PC
311 East York Street
Savannah GA 31401

In re Application of:
KRUSE, ALFONS, et al
Serial No.: 12/616867
Filed: 11/12/2009
Attorney Docket No. : 24605
Title: PLASTIC BAG WITH POUR SPOUT AND SLIDE CLOSURE

: DECISION ON A REQUEST TO PARTICIPATE IN PATENT PCT/PROSECUTION HIGHWAY PROGRAM AND PETITION TO MAKE SPECIAL UNDER CFR 1.102(a)

This is a decision on the request to participate in the Patent Prosecution Highway (PPH) program and the petition under 37 CFR 1.102(a), filed June 10, 2011 to make the above-identified application special.

The request and petition are **dismissed**.

A grantable request to participate in the PPH pilot program and petition to make special require:

(1) The U.S. application must validly claim priority under 35 U.S.C. 119(a) to one or more PCT applications filed in the JPO, EPO, KIPO, or USPTO;
(2) Applicant must submit a copy of the allowable/patentable claim(s) from the PCT application(s) latest international work product (the written opinion or the IPER) along with an English translation thereof and a statement that the English translation is accurate;
(3) All the claims in the U.S. application must sufficiently correspond or be amended to sufficiently correspond to the allowable/patentable claim(s) in the PCT application(s);
(4) Examination of the U.S. application has not begun;
(5) Applicant must submit a copy of the latest international work product from the PCT application containing the allowable/patentable claim(s) along with an English translation thereof and a statement that the English translation is accurate; and
(6) Applicant must submit an IDS listing the documents cited by the PCT examiner in the international work product along with copies of documents except U.S. patents or U.S. patent application publications.

The request to participate in the PPH program and petition met all conditions except Item #2, Item #3, and Item #5 above.

Regarding Items #2 and #5 the request to participate in the PPH program and petition failed to include a copy of the PCT allowed claims and PCT application. An English translation of the allowed claims and EPO office action are not on record.

Regarding Item #3, even assuming the applicant is correct in asserting that the U.S. application claims 19-20 are identical to the allowable PCT claims (which will satisfy Item #3), the applicant still needs to submit a copy of the allowable claims from the PCT application for review. Further, applicant's petition is silent regarding U.S. application claims 1-18 as to whether said claims have a corresponding allowable PCT claim. In order to grant the petition, claims 1-18 must be cancelled.

Applicant is encouraged to cite and submit all relevant prior art references, if any, to facilitate examination in this application.

Applicant is given a time period of **ONE MONTH or THIRTY DAYS**, whichever is longer, from the mailing date of this decision to correct the deficiencies. **NO EXTENSION OF TIME UNDER 37 CFR 1.136 IS PERMITTED.** If the deficiencies are not corrected with the time period given, the application will await action in its regular turn. Response must be filed via EFS-Web.

Telephone inquiries concerning this decision should be directed to Henry C. Yuen at 571-272-4856.

Petition is **dismissed**.

/Henry C. Yuen/

Henry C. Yuen
Special Programs Examiner
Technology Center 3700
Tel: 571-272-4856

UNITED STATES PATENT AND TRADEMARK OFFICE

Commissioner for Patents
United States Patent and Trademark Office
P.O. Box 1450
Alexandria, VA 22313-1450
www.uspto.gov

MAILED

NOV 03 2011

OFFICE OF PETITIONS

HOFFMANN & BARON, LLP
6900 JERICHO TURNPIKE
SYOSSET NY 11791

Applicant: Nanjundaiah, et al.
Appl. No.: 12/616,895
Filing Date: November 12, 2009
Title: METHOD AND SYSTEM FOR UPDATING SOCIAL NETWORKING SITE WITH RING BACK TONE INFORMATION
Attorney Docket No.: 2017-2
Pub. No.: US 2010/0255812 A1
Pub. Date: October 7, 2010

This is a decision on the request for correction of patent application publication under 37 CFR 1.221(b), received on December 6, 2010, for the above-identified application.

The request is DISMISSED.

Applicant requests that the application be republished because the patent application publication contains several material mistakes, wherein the word "interne" should read—internet--, "(EMSI)" should read --(IMSI)--and "service'subscription" should read --service subscription--.

37 CFR 1.221 (b) is applicable "only when the Office makes a material mistake which is apparent from Office records.... Any request for a corrected publication or revised patent application publication other than provided as provided in paragraph (a) of this section must be filed within two months from the date of the patent application publication. This period is not extendable." A material mistake must affect the public's ability to appreciate the technical disclosure of the patent application publication, to determine the scope of the patent application publication, or to determine the scope of the provisional rights that an applicant may seek to enforce upon issuance of a patent. [1]

The errors noted by requestor are Office errors but are not material Office errors as defined under 37 CFR 1.221(b). In particular, the errors do not affect the interpretation of the published claims. See MPEP 1130 B.

The applicant is advised that a "request for republication of an application previously published" may be filed under 37 CFR 1.221(a). Such a request for republication "must include a copy of

[1] Changes to Implement Eighteen-Month Publication of Patent Applications, 65 FR 57023, 57038 (Sept. 20, 2000), 1239, Off. Gaz. Pat. Office Notices 63, 75 (Oct. 10, 2000) (final rule).

the application compliance with the Office's electronic filing system requirements and be accompanied by the publication fee set forth in § 1.18(d) and the processing fee set forth in § 1.17(i)." If the request for republication does not comply with the electronic filing system requirements, the republication will not take place and the publication fee set forth in § 1.18(d) will be refunded. The processing fee will be retained.

A guide for filing a request for a Pre-Grant Publication, such as a request for republication, may be found on the link below:

http://www.uspto.gov/patents/process/file/efs/guidance/index.jsp

http://www.uspto.gov/ebc/portal/efs/pgpub_quickstart.pdf

Any request for republication under 37 CFR 1.221(a), must be submitted via the EFS system, as a "Pre-Grant Publication".

Inquiries relating to this matter may be directed to Sherry D. Brinkley at (571) 272-3204.

/Christopher Bottorff/

Christopher Bottorff
Petitions Examiner
Office of Petitions

UNITED STATES PATENT AND TRADEMARK OFFICE

Commissioner for Patents
United States Patent and Trademark Office
P.O. Box 1450
Alexandria, VA 22313-1450
www.uspto.gov
DIW Dec-10

GAUTHEIR & CONNORS LLP
225 FRANKLIN STREET
SUITE 2300
BOSTON MA 02110

MAILED
DEC 02 2010
OFFICE OF PETITIONS

In re Application of	:	
Leonid Vasiliev, Jr.	:	DECISION ACCORDING STATUS
Application Number: 12/616916	:	UNDER 37 CFR 1.47(b)
Filing Date: 11/12/2009	:	
Attorney Docket Number:	:	
BARZ.9191	:	

This is in response to the renewed petition under 37 CFR 1.47(b) filed on September 28, 2010.

The petition is **GRANTED**.

Petitioner has shown that a copy of the application and declaration were sent to the non-signing inventor, Leonid Vasiliev, Jr., but that no executed declaration was returned. An oath or declaration in compliance with 37 CFR 1.63, signed on behalf of the non-signing inventor by Marco Marengo, President of assignee Uniheat s.r.l., has been provided with the renewed petition.

This application and papers have been reviewed and found in compliance with 37 CFR 1.47(b). This application is hereby accorded Rule 1.47(b) status.

As provided in Rule 1.47(c), this Office will forward notice of this application's filing to the non-signing inventor at the address given in the Declaration. Notice of the filing of this application will also be published in the *Official Gazette*.

Receipt of the revocation and power of attorney filed on September 28, 2010 is acknowledged. All correspondence will be mailed to the new address of record.

The application is being referred to the Office of Patent Application Processing for further processing.

Telephone inquiries related to this decision should be directed to the undersigned at (571)272-3231.

Douglas I. Wood
Senior Petitions Attorney
Office of Petitions

UNITED STATES PATENT AND TRADEMARK OFFICE

Commissioner for Patents
United States Patent and Trademark Office
P.O. Box 1450
Alexandria, VA 22313-1450
www.uspto.gov
DW Dec-10

Leonid Vasiliev, Jr.
Ul. Kulman, 13-48 Minsk
220100
BELARUS

MAILED

DEC 02 2010

OFFICE OF PETITIONS

In re Application of
Leonid Vasiliev, Jr.
Application No. 12/616,916
Filed: November 12, 2009
For: HEAT EXCHANGE DEVICE MADE OF POLYMERIC MATERIAL

Dear Mr. Vasiliev:

You are named as the sole inventor in the above identified United States patent application, filed under the provisions of 35 U.S.C. 116 (United States Code), and 37 CFR 1.47(b), Rules of Practice in Patent Cases. Should a patent be granted on the application you will be designated therein as the sole inventor.

As the named inventor you are entitled to inspect any paper in the file wrapper of the application, order copies of all or any part thereof (at a prepaid cost per 37 CFR 1.19) or make your position of record in the application. Alternatively, you may arrange to do any of the preceding through a registered patent attorney or agent presenting written authorization from you. If you care to join the application, counsel of record (see below) would presumably assist you. Joining in the application would entail the filing of an appropriate oath or declaration by you pursuant to 37 CFR 1.63.

Telephone inquiries regarding this communication should be directed to the undersigned at 571/272-3231. Requests for information regarding your application should be directed to the File Information Unit at 571-272-3150. Information regarding how to pay for and order a copy of the application, or a specific paper in the application, should be directed to Certification Division at 571-272-3150 or 1-800-972-6382 (outside the Washington D.C. area).

D Wood

Douglas I. Wood
Senior Petitions Attorney
Office of Petitions

GAUTHIER & CONNORS LLP
225 FRANKLIN ST
SUITE 2300
BOSTON MA 02110

Doc Code: PPH.PCT.652
Document Description: Petition to make special under PCT-Patent Pros Hwy

PTO/SB/20PCT-KR (06-10)
Approved for use through 01/31/2012. OMB 0651-0058
U.S. Patent and Trademark Office; U. S. DEPARTMENT OF COMMERCE
Under the Paperwork Reduction Act of 1995, no persons are required to respond to a collection of information unless it displays a valid OMB control number.

REQUEST FOR PARTICIPATION IN THE PATENT COOPERATION TREATY - PATENT PROSECUTION HIGHWAY (PCT-PPH) PILOT PROGRAM BETWEEN THE KOREAN INTELLECTUAL PROPERTY OFFICE (KIPO) AND THE USPTO

Application No:	12/616,958	Filing date:	November 12, 2009
First Named Inventor:	Gary Bernard Jabara and Christos Karmis		
Title of the Invention:	System and Method for Direct Communication Between Wireless Communication Devices		

THIS REQUEST FOR PARTICIPATION IN THE PCT-PPH PILOT PROGRAM ALONG WITH THE REQUIRED DOCUMENTS MUST BE SUBMITTED VIA EFS-WEB. INFORMATION REGARDING EFS-WEB IS AVAILABLE AT HTTP://WWW.USPTO.GOV/EBC/EFS_HELP.HTML

APPLICANT HEREBY REQUESTS PARTICIPATION IN THE PCT-PPH PROGRAM AND PETITIONS TO MAKE THE ABOVE-IDENTIFIED APPLICATION SPECIAL UNDER THE PCT-PPH PROGRAM.

The above-identified application is (1) a national stage entry of the corresponding PCT application, or (2) a national stage entry of another PCT application which claims priority to the corresponding PCT application, or (3) a national application that claims domestic/ foreign priority to the corresponding PCT application, or (4) a national application which forms the basis for the priority claim in the corresponding PCT application, or (5) a continuing application of a U.S. application that satisfies one of (1) to (4) above, or (6) a U.S. application that claims domestic benefit to a U.S. provisional application which forms the basis for the priority claim in the corresponding PCT application.

The corresponding PCT application number(s) is/are: PCT/US2010/025949

The international date of the corresponding PCT application(s) is/are: 03/01/2010

I. List of Required Documents:

a. **A copy of the latest international work product (WO/ISA, WO/IPEA, or IPER) in the above–identified corresponding PCT application(s)**

☒ Is attached.

☐ Is not attached because the document is already in the U.S. application.

b. **A copy of all claims which were indicated as having novelty, inventive step and industrial applicability in the above-identified corresponding PCT application(s).**

☒ Is attached.

☐ Is not attached because the document is already in the U.S. application.

c. **English translations of the documents in a. and b. above are attached (if the documents are not in the English language). A statement that the English translation is accurate is attached for the document in b. above.**

This collection of information is required by 35 U.S.C. 119, 37 CFR 1.55, and 37 CFR 1.102(d). The information is required to obtain or retain a benefit by the public, which is to file (and by the USPTO to process) an application. Confidentiality is governed by 35 U.S.C. 122 and 37 CFR 1.11 and 1.14. This collection is estimated to take 2 hours to complete, including gathering, preparing, and submitting the completed application form to the USPTO. Time will vary depending upon the individual case. Any comments on the amount of time you require to complete this form and/or suggestions for reducing this burden should be sent to the Chief Information Officer, U.S. Patent and Trademark Office, U.S. Department of Commerce, P.O. Box 1450, Alexandria, VA 22313-1450. DO NOT SEND FEES OR COMPLETED FORMS TO THIS ADDRESS.

Approved for use through 01/31/2012. OMB 0651-0058
U.S.Patent and Trademark Office; U.S. DEPARTMENT OF COMMERCE
Under the Paperwork Reduction Act of 1995, no persons are required to respond to a collection of information unless it displays a valid OMB control number.

REQUEST FOR PARTICIPATION IN THE PCT-PPH PILOT PROGRAM BETWEEN THE KIPO AND THE USPTO

(continued)

Application No.:	12/616,958
First Named Inventor:	Gary Bernard Jabara and Christos Karmis

d. **(1) An information disclosure statement listing the documents cited in the international work products (ISR, WO/ISA, WO/IPEA, IPER) of the corresponding PCT application.**

☐ Is attached

☒ Has already been filed in the above-identified U.S. application on 10/19/2010

(2) Copies of all documents (except) for U.S. patents or U.S. patent application publications)

☐ Are attached.

Have already been filed in the above-identified U.S. application on _____

II. Claims Correspondence Table:

Claims in US Application	Patentable Claims in the corresponding PCT Application	Explanation regarding the correspondence
44	1 and 3	US claim 44 is a combination of PCT claims 1 and 3
45-65	4-24	US claims 45-65 are identical to PCT claims 4-24
66	25 and 27	US claim 66 is a combination of PCT claims 25 and 27
67	28 and 30	US claim 67 is a combination of PCT claims 28 and 30
68-80	31-43	US claims 68-80 are identical to PCT claims 31-43
81	44-45	US claim 81 is a combination of PCT claims 44-45
82-93	47-58	US claims 82-93 are identical to PCT claims 47-58
		and dependent upon claim 81
94	44-46	US claim 94 is a combination of PCT claims 44-46
95-106	47-58	US claims 95-106 are identical to PCT claims 47-58
		and dependent upon claim 94

III. All the claims in the US application sufficiently correspond to the patentable claims in the corresponding PCT application.

Signature /Michael J. Donohue, Reg. No. 35,859/	Date November 10, 2010
Name (Print/Typed) Michael J. Donohue	Registration Number 35859

UNITED STATES PATENT AND TRADEMARK OFFICE

UNITED STATES DEPARTMENT OF COMMERCE
United States Patent and Trademark Office
Address: COMMISSIONER FOR PATENTS
P.O. Box 1450
Alexandria, Virginia 22313-1450
www.uspto.gov

APPLICATION NO.	FILING DATE	FIRST NAMED INVENTOR	ATTORNEY DOCKET NO.	CONFIRMATION NO.
12/616,958	11/12/2009	Gary B. Jabara	102802-1US1	3677

22504 7590 12/14/2010

DAVIS WRIGHT TREMAINE, LLP/Seattle
1201 Third Avenue, Suite 2200
SEATTLE, WA 98101-3045

EXAMINER	
ANDERSON, MATTHEW D	
ART UNIT	PAPER NUMBER
2618	

NOTIFICATION DATE	DELIVERY MODE
12/14/2010	ELECTRONIC

Please find below and/or attached an Office communication concerning this application or proceeding.

The time period for reply, if any, is set in the attached communication.

Notice of the Office communication was sent electronically on above-indicated "Notification Date" to the following e-mail address(es):

seapatentdocket@dwt.com

UNITED STATES PATENT AND TRADEMARK OFFICE

Commissioner for Patents
United States Patent and Trademark Office
P.O. Box 1450
Alexandria, VA 22313-1450
www.uspto.gov

DAVIS WRIGHT TREMAINE, LLP/Seattle
1201 Third Avenue, Suite 2200
SEATTLE WA 98101-3045

In re Application of	:	
JABARA, GARY B. et al	:	DECISION ON REQUEST TO
Application No. 12/616,958	:	PARTICIPATE IN PATENT
Filed: November 11, 2009	:	PROSECUTION HIGHWAY
Att. Docket No. 102802-1US1	:	PROGRAM AND PETITION
	:	TO MAKE SPECIAL UNDER
	:	37 CFR 1.102(a)

This is a decision on the request to participate in the PCT Patent Prosecution Highway (PPH) pilot program and the petition under 37 CFR 1.102(a), filed November 10, 2010 to make the above-identified application special.

The request and petition are **GRANTED**.

A grantable request to participate in the PCT-PPH pilot program and petition to make special require:

(1) The U.S. application be (a) a national stage entry of the corresponding PCT application, or (b) a national stage entry of another PCT application which claims priority to the corresponding PCT application, or (c) a national stage application that claims domestic/foreign priority to the corresponding PCT application, (d) a national application which forms the basis for the priority claim in the corresponding PCT application, or (e) a continuation application of the U.S. application which satisfies one of the above (a) to (d) scenarios.
(2) A copy of the latest international work product (WO/ISA, WO/IPEA, or IPER) in the corresponding PCT application(s) which indicates at least one claim in the PCT application has novelty, inventive step, and industrial applicability.
(3) A copy of all claims which were indicated as having novelty, inventive step and industrial applicability in the corresponding PCT application(s).
(4) English translations of the documents in (2) and (3) (if the documents are not in the English language).
(5) All the claims in the U.S. application must sufficiently correspond or be amended to sufficiently correspond to the claims which were indicated as having novelty, inventive step, and industrial applicability in the corresponding PCT application(s).
(6) Examination of the U.S. application has not begun; and
(7) An information disclosure statement listing the documents cited in the international work products (ISR, WO/ISA. WO/IPEA, IPER) of the corresponding PCT application(s) and copies

of all of the documents cited in the international work products of the PCT application (unless copies have already been filed in the U.S. application) corresponding to the U.S. application except U.S. patents or U.S. patent application publications.

The request to participate in the PCT-PPH pilot program and petition comply with the above requirements. Accordingly, the above-identified application has been accorded "special" status.

Telephone inquiries concerning this decision should be directed to Michael Horabik at 571-272-3068.

All other inquiries concerning the examination or status of the application should be directed to Patent Application Information Retrieval (PAIR) system.

The application is being forwarded to the examiner for action on the merits commensurate with this decision.

/Michael Horabik/

Michael Horabik
Quality Assurance Specialist
Technology Center 2600
Communications

UNITED STATES PATENT AND TRADEMARK OFFICE

Commissioner for Patents
United States Patent and Trademark Office
P.O. Box 1450
Alexandria, VA 22313-1450
www.uspto.gov

NAVAL RESEARCH LABORATORY
ASSOCIATE COUNSEL (PATENTS)
CODE 1008.2
4555 OVERLOOK AVENUE, S.W.
WASHINGTON DC 20375-5320

MAILED

FEB 14 2011

OFFICE OF PETITIONS

In re Application of :
Anthony P. Malanoski, et al. :
Application No. 12/617,025 : DECISION GRANTING PETITION
Filed: November 12, 2009 : UNDER 37 CFR 1.313(c)(2)
Attorney Docket No. 100136-US1 :

This is a decision on the petition under 37 CFR 1.313(c)(2), filed February 11, 2011, to withdraw the above-identified application from issue after payment of the issue fee.

The petition is **GRANTED**.

The above-identified application is withdrawn from issue for consideration of a submission under 37 CFR 1.114 (request for continued examination). *See* 37 CFR 1.313(c)(2).

Petitioner is advised that the issue fee paid on December 13, 2010 cannot be refunded. If, however, this application is again allowed, petitioner may request that it be applied towards the issue fee required by the new Notice of Allowance.[1]

Telephone inquiries regarding this decision should be directed to undersigned at (571) 272-1642. All other inquiries concerning the examination or status of this application should be directed to the Technology Center.

This application is being referred to Technology Center AU 1631 for processing of the request for continued examination under 37 CFR 1.114 and for consideration of the concurrently filed information disclosure statement.

/AMW/
April M. Wise
Petitions Examiner
Office of Petitions

---

[1] *The request to apply the issue fee to the new Notice may be satisfied by completing and returning the new Part B - Fee(s) Transmittal Form (along with any balance due at the time of submission). Petitioner is advised that the Issue Fee Transmittal Form must be completed and timely submitted to avoid abandonment of the application.*

UNITED STATES PATENT AND TRADEMARK OFFICE

Commissioner for Patents
United States Patent and Trademark Office
P.O. Box 1450
Alexandria, VA 22313-1450
www.uspto.gov

ZYMOGENETICS, INC.
INTELLECTUAL PROPERTY DEPARTMENT
1201 EASTLAKE AVENUE EAST
SEATTLE WA 98102-3702

MAILED

JAN 10 2011

OFFICE OF PETITIONS

In re Application of	:	
Jaspers, et al.	:	
Application No. 12/617,078	:	DECISION
Filed/Deposited: 12 November, 2009	:	
Attorney Docket No. 06-07C2	:	

This is a decision on the petition filed on 8 July, 2010, seeking to have accorded a filing date of 12 November, 2009, for the above-identified application based upon a showing that the omitted drawing/figures were present in the prior-filed application to which this application claimed benefit (pursuant to 37 C.F.R. §1.78 and/or §1.55) on deposit.

The petition is **DISMISSED**.

The instant application was deposited on 12 November, 2009.

On 17 May, 2010, the Office of Patent Application Processing (OPAP) mailed a Notice of Incomplete Nonprovisional Application, stating that the application had not been accorded a filing date because it had been deposited without drawings as required under 35 U.S.C. §113 (first sentence).

The Office indicated that Petitioner could:

- demonstrate on petition the presence of the drawings/figures by presentation of evidence of deposit (e.g., date-stamped receipt card, EFS Acknowledgement Receipt); or

- submit the drawings/figures and accept the date of submission as the filing date.

The Office gave Petitioner two (2) months within which to reply.

On 8 July, 2010, Petitioner filed, *inter alia*, filed a petition pursuant to 37 C.F.R. §1.57, seeking a filing date of 12 November, 2009, for the application.

Petitioner appears to have filed drawings and amendment under the rule—any determination as to that amendment will be made by the Examiner.

Petitioner's arguments and evidence have been considered. However, a review of the application confirms that, as filed, the application contained at least one method/process/composition claim. MPEP §601.01(f) provides that:

> It has been USPTO practice to treat an application that contains at least one process or method claim as an application for which a drawing is not necessary for an understanding of the invention under 35 U.S.C. §113 (first sentence). The same practice has been followed in composition applications.

Thus, pursuant to §601.01(f), a drawing is not considered essential for a filing date. The instant application is entitled to a filing date without drawings present in the application.

Accordingly, the Office should have granted the application a filing date and mailed a Notice of Omitted Items instead of a Notice of Incomplete Nonprovisional Application.

The express incorporation by reference entitled Petitioner to file an amendment under 37 C.F.R. §1.57(b) to add the subject matter of the non-provisional application into the disclosure of this application. Please note that no petition is required for that purpose, but that an amendment must be filed, and that the amendment must comply with 37 C.F.R. §1.57(b) and 37 C.F.R. §1.121 (*See*: MPEP §201.06(c)(IV).)

The Petition fee is waived and will be refunded *via* deposit account. Should Petitioner later find that a petition fee was not refunded, Petitioner should request a refund from the Office of Finance and enclose therewith a copy of this decision.

Pursuant to this decision, the application will be referred to the Office of Patent Application Processing (OPAP) for:

- **correction of the filing date to 12 November, 2009**;
- **indication in Office records, as appropriate, that "0" sheets of drawings were present on filing** and
- **issuance of a filing receipt.**

Telephone inquiries concerning this matter should be directed to John J Gillon, Jr., attorney, at (571) 272-3214. Inquiries regarding initial patent application processing should be directed to OPAP at (703) 308-9210.

Chris Bottorff
Supervisory Petitions Examiner
Office of Petitions

UNITED STATES PATENT AND TRADEMARK OFFICE

Commissioner for Patents
United States Patent and Trademark Office
P.O. Box 1450
Alexandria, VA 22313-1450
www.uspto.gov

LEE & HAYES, PLLC
601 W. RIVERSIDE AVE
SUITE 1400
SPOKANE, WA 99201

MAILED

MAR 08 2011

OFFICE OF PETITIONS

In re Application of :
Jonathan W. Ellis :
Application No. 12/617,090 :
Filed: November 12, 2009 :
Attorney Docket No. AD1-0003US :

DECISION ON PETITION
TO WITHDRAW
FROM RECORD

This is a decision on the Request to Withdraw as attorney or agent of record under 37 C.F.R. § 1.36(b), filed on January 26, 2011.

The request is **NOT APPROVED**.

The Office no longer accepts address changes to a new practitioner or law firm filed with requests under 37 C.F.R. § 1.36(b). The Office will only accept correspondence address changes to the most current address information provided for the assignee of the entire interest *who properly became of record under 37 CFR 3.71,* or, if no assignee of the entire interest has properly been made of record, the most current address information provided for the first named inventor. 37 CFR 3.71(c) states:

> *An assignee becomes of record either in a national patent application or a reexamination proceeding by filing a statement in compliance with § 3.73(b) that is signed by a party who is authorized to act on behalf of the assignee.*

The request to withdraw as attorney or agent of record under 37 C.F.R. § 1.36(b) cannot be approved at this time.

There are no outstanding Office actions that require a reply from the applicant.

Telephone inquires concerning this decision should be directed to the undersigned at (571) 272-6059. All other inquires concerning either the examination or status of the application should be directed to the Technology Center.

Alicia Kelley
Petitions Examiner
Office of Petitions

cc: MARGARET ANDERSON
106 E. 6TH STREET, SUITE 900
AUSTIN TX 78701

UNITED STATES PATENT AND TRADEMARK OFFICE

Commissioner for Patents
United States Patent and Trademark Office
P.O. Box 1450
Alexandria, VA 22313-1450
www.uspto.gov

CHOATE, HALL & STEWART / CITRIX SYSTEMS, INC.
TWO INTERNATIONAL PLACE
BOSTON MA 02110

MAILED

DEC 02 2010

OFFICE OF PETITIONS

In re Application of	:	
Gupta et al.	:	DECISION ON PETITION
Application No. 12/617,101	:	TO WITHDRAW
Filed: November 12, 2009	:	FROM RECORD
Attorney Docket No. 2006579-1668 (CTX-469)	:	

This is a decision on the Request to Withdraw as Attorney or Agent under 37 C.F.R. § 1.36(b) or 37 C.F.R. § 10.40, filed November 10, 2010.

The request is **DISMISSED**.

A review of the file record indicates that practitioner signing the request, Brenda Herschbach Jarrell, and the other attorneys/agents of Choate, Hall & Stewart: (1) do not have power of attorney in this patent application; but (2) have been employed or otherwise engaged in the proceedings in this patent application.

The Office will no longer approve requests from practitioners to withdraw from applications where the requesting practitioner was never given power of attorney but is acting, or has acted, in a representative capacity pursuant to 37 CFR 1.34. In these situations, the practitioner is responsible for the correspondence the practitioner files in the application while acting in a representative capacity. As such, there is no need for the practitioner to obtain the Office's permission to withdraw from representation.

Further, the change of correspondence address as listed in the Request to Withdraw cannot be accepted because it was not signed by an attorney of record. *See MPEP §§ 601.03 and 405.* If the applicants wish future correspondence to be mailed to a new law firm, a new power of attorney should be submitted in the application and should include the desired change of correspondence address. The Office will continue to mail all future correspondence solely to the address of record until otherwise properly notified by the applicant.

Telephone inquires concerning this decision should be directed to the undersigned at 571-272-3206.

Liana Walsh
Petitions Examiner
Office of Petitions

UNITED STATES PATENT AND TRADEMARK OFFICE

Commissioner for Patents
United States Patent and Trademark Office
P.O. Box 1450
Alexandria, VA 22313-1450
www.uspto.gov

SHUTTLEWORTH & INGERSOLL, P.L.C.
115 3RD STREET SE, SUITE 500
P.O. BOX 2107
CEDAR RAPIDS IA 52406

MAILED
NOV 22 2011
OFFICE OF PETITIONS

In re Application of :
Anthony Kriz et al. :
Application No. 12/617,200 :
Filed: November 12, 2009 :
Attorney Docket No. **17157-0017** :

NOTICE

This is a notice regarding your request filed October 12, 2011, and supplemented on November 17, 2011, for acceptance of a fee deficiency submission under 37 CFR 1.28.

The Office no longer investigates or rejects original or reissue applications under 37 CFR 1.56. **1098 Off. Gaz. Pat. Office 502 (January 3, 1989)**. Therefore, nothing in this Notice is intended to imply that an investigation was done.

Your fee deficiency submission under 37 CFR 1.28 is hereby **ACCEPTED**.

This application is no longer entitled to small entity status. Accordingly, all future fees paid in this application must be paid at the large entity rate.

Inquiries related to this communication should be directed to the undersigned at (571) 272-4584.

JoAnne Burke
Petitions Examiner
Office of Petitions

UNITED STATES PATENT AND TRADEMARK OFFICE

Commissioner for Patents
United States Patent and Trademark Office
P.O. Box 1450
Alexandria, VA 22313-1450
www.uspto.gov

International IP Law Group
P.O. Box 691927
Houston, TX 77269-1927

MAILED

FEB 24 2011

OFFICE OF PETITIONS

In re Application of Hoeksel et al. :
Application No. 12/617,274 : Decision on Petition
Filing Date: November 12, 2009 :
Atty. Docket No. 11406-PT-US/JOST:0072 :

This is a decision responding to the petition filed October 1, 2010, which is being treated as a petition under 37 CFR 1.181 requesting the Office withdraw the holding of abandonment.

The petition is **granted**.

Background

The application papers filed November 12, 2009, included an application data sheet ("ADS"), which stated correspondence should be sent to the address associated with Customer No. 69590. The following address is associated with Customer No. 69590:

International IP Law Group
P.O. Box 691927
Houston, TX 77269-1927

The Office mailed a Notice to File Missing Parts of Nonprovisional Application to the address above on November 25, 2009. The notice set a period for reply of two (2) months from the mail date of the Notice. The notice required the submission of a $130 surcharge and an executed oath or declaration.

The United States Postal Service ("USPS") returned the November 25, 2009 notice to the Office. The returned envelope includes the following language:

Return to Sender
Not Deliverable as Addressed
Unable to Froward

The Office mailed a Notice of Abandonment to the address above on August 2, 2010.

Petitioner received the Notice of Abandonment and subsequently filed the instant petition on October 1, 2010.

The petition is accompanied by a petition fee of $270, an executed declaration, and payment of $130 for the required surcharge.

Discussion

The petition alleges the failure to file a reply to the November 25, 2009 notice was unavoidable because the notice was never received. Petitioner states the mailing address on the notice is an accurate *and current* mailing address.

Since the petition alleges non-receipt of the notice, the Office will initially treat the petition as a petition under 37 CFR 1.181 requesting withdrawal of the holding of abandonment.

The presence of the returned November 25, 2009 notice in the application file clearly demonstrates the notice was never received at the address or record, and the petition states the mailing address used by the Office was a proper address. Therefore, the holding of abandonment is withdrawn.

A petition fee is unnecessary when filing a petition under 37 CFR 1.181. Therefore, the $270 petition fee submitted with the petition will be credited back to the credit card used to pay the fee.

The Office of Patent Application Processing will be informed of the instant decision and will prepare the application for examination in due course.

Telephone inquiries regarding this communication should be directed to Petitions Attorney Steven Brantley at (571) 272-3203.

Charles Steven Brantley
Senior Petitions Attorney
Office of Petitions

UNITED STATES PATENT AND TRADEMARK OFFICE

Commissioner for Patents
United States Patent and Trademark Office
P.O. Box 1450

MAILED

APR 19 2012

OFFICE OF PETITIONS

CROWELL & MORING LLP
INTELLECTUAL PROPERTY GROUP
P.O. BOX 14300
WASHINGTON DC 20044-4300

In re Application of : DECISION ON REQUEST TO
Takao MIYAKE et al. : PARTICIPATE IN PPH PROGRAM
Application No. 12/617,327 : AND PETITION TO MAKE SPECIAL
Filed: November 12, 2009 : UNDER 37 CFR 1.102(a)
Atty. Docket No.: 105615.62070US :
For: CONTROL APPARATUS FOR INTERNAL COMBUSTION ENGINE

This is a decision on the request to participate in the Patent Prosecution Highway (PPH) program and the petition under 37 CFR 1.102(a), filed March 29, 2012 to make the above-identified application special.

The petition and request are **GRANTED**.

A grantable request to participate in the PPH (patent prosecution highway) program and petition to make special require:

1. The U.S. application is a Paris convention application that either validly claims priority under 35 U.S.C. 119(a) and 37 CFR 1.55 to one or more application filed in the JPO or to a PCT application that contains no priority claims, or is a national stage application under the PCT that either validly claims priority to an application filed in the JPO or to a PCT application that contains no priority claims, or that contains no priority claim, or is a bypass application filed under 35 U.S.C. 111(a) which validly claims benefit under 35 U.S.C. 120 to a PCT application that validly claims priority to an application filed in the JPO, to a PCT application that contains no priority claims, or contain no priority claim;

2. Applicant must ensure all the claims in the U.S. application sufficiently correspond or amended to sufficiently correspond to the allowable/patentable claim(s) in the JPO application and submit a claim correspondence table in English;

3. Examination of the U.S. application has not begun;

4. Applicant must submit a copy of the office action(s) just prior to the "Decision to Grant a Patent" from each of the JPO application(s) containing the allowable/patentable claim(s), or if the allowable/patentable claim(s) are from a "Notification of Reasons for Refusal" then the Notification of Reasons for Refusal, or if the JPO application is a first action allowance then no office action from the JPO is necessary should be indicated on the request/petition form, and an English language translation of the JPO Office action if submitted; and

5. Applicant must submit an IDS listing the documents cited by the JPO examiner in the JPO office action, unless already submitted in this application, and copies of the documents except U.S. patents or U.S. patent application publications, unless already submitted in this application.

The request to participate in the PPH program and petition comply with the above requirements. Accordingly, the above-identified application has been accorded "special" status.

Telephone inquiries concerning this decision should be directed to Robert DeWitty, Petition Attorney, Office of Petitions at 571-272-8427.

All other inquiries concerning the examination or status of the application is accessible in the PAIR system at http://www.uspto.gov/ebc/index.html.

This application will be forwarded to Technology Center Art Unit 3747 for action commensurate with this decision.

David Bucci
Petitions Examiner
Office of Petitions

UNITED STATES PATENT AND TRADEMARK OFFICE

Commissioner for Patents
United States Patent and Trademark Office
P.O. Box 1450
Alexandria, VA 22313-1450
www.uspto.gov

POLSINELLI SHUGHART PC
700 WEST 47TH STREET
SUITE 1000
KANSAS CITY MO 64112

MAILED

JUN 23 2011

OFFICE OF PETITIONS

In re Application of :
OLSEN :
Application No. 12/617,409 : DECISION ON PETITION
Filed: November 12, 2009 : TO WITHDRAW
Attorney Docket No. MIS096/325989 : FROM RECORD
:

This is a decision on the Request to Withdraw as attorney or agent of record under 37 C.F.R. § 1.36(b), filed May 16, 2011.

The request is **APPROVED**.

A grantable request to withdraw as attorney/agent of record must be signed by every attorney/agent seeking to withdraw or contain a clear indication that one attorney is signing on behalf of another/others. The Office requires the practitioner(s) requesting withdrawal to certify that he, she, or they have: (1) given reasonable notice to the client, prior to the expiration of the response period, that the practitioner(s) intends to withdraw from employment; (2) delivered to the client or a duly authorized representative of the client all papers and property (including funds) to which the client is entitled; and (3) notified the client of any responses that may be due and the time frame within which the client must respond, pursuant 37 CFR 10.40(c).

The request was signed by Marcia J. Rodgers on behalf of the attorneys of record associated with Customer No. 24030.

The attorneys of record associated with Customer No. 24030 have been withdrawn.

Applicant is reminded that there is no attorney of record at this time.

The correspondence address of record has been changed and the new correspondence address is the address indicated below until otherwise properly notified.

Telephone inquiries concerning this decision should be directed to the undersigned at (571) 272-6735.

/Diane Goodwyn/
Diane Goodwyn
Petitions Examiner
Office of Petitions

cc: JEFFREY D. OLSEN
1839 N. COMMERCE DRIVE
NIXA MO 65714

UNITED STATES PATENT AND TRADEMARK OFFICE

Commissioner for Patents
United States Patent and Trademark Office
P.O. Box 1450
Alexandria, VA 22313-1450
www.uspto.gov

BARRY W. CHAPIN, ESQ.
CHAPIN INTELLECTUAL PROPERTY LAW, LLC
WESTBOROUGH OFFICE PARK
1700 WEST PARK DRIVE, SUITE 280
WESTBOROUGH, MA 01581

MAILED

JUN 01 2011

OFFICE OF PETITIONS

In re Application of :
Jin-Ki Kim, et al. :
Application No.: 12/617,459 : ON PETITION
Filed: November 12, 2009 :
Atty Docket No.: MOS09-03(1265-11US-0C1-45 :

This is a decision on the petition, filed May 31, 2011, under 37 CFR 1.313(c)(2) to withdraw the above-identified application from issue after payment of the issue fee.

The petition is **GRANTED**.

The above-identified application is withdrawn from issue for consideration of a submission under 37 CFR 1.114 (request for continued examination). See 37 CFR 1.313(c)(2).

Petitioner is advised that the issue fee paid on April 28, 2011, cannot be refunded. If, however, this application is again allowed, petitioner may request that it be applied towards the issue fee required by the new Notice of Allowance.[1]

Telephone inquiries relating to this decision should be directed to the undersigned at (571) 272-3204.

The application is being referred to Technology Center AU 2827 for further processing of the request for continued examination under 37 CFR 1.114 and for consideration of the concurrently filed Information Disclosure Statement (IDS).

/SDB/

Sherry D. Brinkley
Petitions Examiner
Office of Petitions

[1] *The request to apply the issue fee to the new Notice may be satisfied by completing and returning the new Part B – Fee(s) Transmittal Form (along with any balance due at the time of submission). Petitioner is advised that the Issue Fee Transmittal Form must be completed and timely submitted to avoid abandonment of the application.*

UNITED STATES PATENT AND TRADEMARK OFFICE

Commissioner for Patents
United States Patent and Trademark Office
P.O. Box 1450
Alexandria, VA 22313-1450
www.uspto.gov

BARRY W. CHAPIN, ESQ.
CHAPIN INTELLECTUAL PROPERTY LAW, LLC
WESTBOROUGH OFFICE PARK
1700 WEST PARK DRIVE, SUITE 280
WESTBOROUGH, MA 01581

MAILED
FEB 10 2012
OFFICE OF PETITIONS

In re Application of :
Jin-Ki Kim, et al. :
Application No.: 12/617,459 : ON PETITION
Filed: November 12, 2009 :
Attorney Docket No.: MOS09-03(1265-11US-0C1-45 :

This is a decision on the petition, filed February 8, 2012, under 37 CFR 1.313(c)(2) to withdraw the above-identified application from issue after payment of the issue fee.

The petition is **GRANTED**.

The above-identified application is withdrawn from issue for consideration of a submission under 37 CFR 1.114 (request for continued examination). See 37 CFR 1.313(c)(2).

Petitioner is advised that the issue fee paid on January 18, 2012, cannot be refunded. If, however, this application is again allowed, petitioner may request that it be applied towards the issue fee required by the new Notice of Allowance.[1]

Telephone inquiries relating to this decision should be directed to the undersigned at (571) 272-3204.

The application is being referred to Technology Center AU 2827 for further processing of the request for continued examination and for consideration of the concurrently filed Information Disclosure Statement (IDS).

/SDB/

Sherry D. Brinkley
Petitions Examiner
Office of Petitions

[1] *The request to apply the issue fee to the new Notice may be satisfied by completing and returning the new Part B – Fee(s) Transmittal Form (along with any balance due at the time of submission). Petitioner is advised that the Issue Fee Transmittal Form must be completed and timely submitted to avoid abandonment of the application.*

UNITED STATES PATENT AND TRADEMARK OFFICE

UNITED STATES DEPARTMENT OF COMMERCE
United States Patent and Trademark Office
Address: COMMISSIONER FOR PATENTS
P.O. Box 1450
Alexandria, Virginia 22313-1450
www.uspto.gov

APPLICATION NO.	FILING DATE	FIRST NAMED INVENTOR	ATTORNEY DOCKET NO.	CONFIRMATION NO.
12/617,495	11/12/2009	Masahiro YAMADA	TOSH/0075US	4682

26290 7590 09/10/2010

PATTERSON & SHERIDAN, L.L.P.
3040 POST OAK BOULEVARD
SUITE 1500
HOUSTON, TX 77056

EXAMINER	
WANG, ANDREW J	

ART UNIT	PAPER NUMBER
2628	

MAIL DATE	DELIVERY MODE
09/10/2010	PAPER

Please find below and/or attached an Office communication concerning this application or proceeding.

The time period for reply, if any, is set in the attached communication.

UNITED STATES PATENT AND TRADEMARK OFFICE

Commissioner for Patents
United States Patent and Trademark Office
P.O. Box 1450
Alexandria, VA 22313-1450
www.uspto.gov

PATTERSON & SHERIDAN, L.L.P.
3040 POST OAK BOULEVARD
SUITE 1500
HOUSTON TX 77056

In re Application of	:	
YAMADA, MASAHIRO	:	DECISION ON REQUEST TO
Application No. 12/617,495	:	PARTICIPATE IN PATENT
Filed: November 12, 2009	:	PROSECUTION HIGHWAY
Attorney Docket No. **TOSH/0075US**	:	PROGRAM AND PETITION
	:	TO MAKE SPECIAL UNDER
	:	37 CFR 1.102(d)

This is a decision on the request to participate in the Patent Prosecution Highway (PPH) program and the petition under 37 CFR 1.102(d), filed July 16, 2010 to make the above-identified application special.

The request and petition are **GRANTED**.

A grantable request to participate in the PPH program and petition to make special require:

(1) The U.S. application must validly claim priority under 35 U.S.C. 119(a) to one or more applications filed in the JPO;
(2) Applicant must submit a copy of the allowable/patentable claim(s) from the JPO application(s) along with an English translation thereof and a statement that the English translation is accurate;
(3) All the claims in the U.S. application must sufficiently correspond or be amended to sufficiently correspond to the allowable/patentable claim(s) in the JPO application(s);
(4) Examination of the U.S. application has not begun;
(5) Applicant must submit a copy of all the office actions from each of the JPO application(s) containing the allowable/patentable claim(s) along with an English translation thereof and a statement that the English translation is accurate; and
(6) Applicant must submit an IDS listing the documents cited by the JPO examiner in the JPO office action along with copies of documents except U.S. patents or U.S. patent application publications.

The request to participate in the PPH program and petition comply with the above requirements. Accordingly, the above-identified application has been accorded "special" status.

The PPH petition fee has been eliminated for PPH requests filed on or after May 25, 2010 and the petition fee paid is being refunded.

Telephone inquiries concerning this decision should be directed to Doris To at 571-272-7629.

All other inquiries concerning the examination or status of the application should be directed to Patent Application Information Retrieval (PAIR) system.

The application is being forwarded to the examiner for action on the merits commensurate with this decision.

/Doris To/

Doris To
Quality Assurance Specialist
Technology Center 2600
Communications

UNITED STATES PATENT AND TRADEMARK OFFICE

Commissioner for Patents
United States Patent and Trademark Office
P.O. Box 1450
Alexandria, VA 22313-1450
www.uspto.gov

WONG, CABELLO, LUTSCH, RUTHERFORD & BRUCCULERI, L.L.P.
20333 SH 249 6TH FLOOR
HOUSTON TX 77070

MAILED

JUN 16 2011

OFFICE OF PETITIONS

In re Application of	:	
Genest et al.	:	DECISION ON PETITION
Application No. 12/617,504	:	TO WITHDRAW
Filed: November 12, 2009	:	FROM RECORD
Attorney Docket No. 149-0226US (09-019-US)	:	

This is a decision on the request to withdraw as attorney of record under 37 C.F.R. § 1.36, filed May 17, 2011.

The request is **APPROVED**.

A grantable request to withdraw as attorney/agent of record must be signed by every attorney/agent seeking to withdraw or contain a clear indication that one attorney is signing on behalf of another/others. The Office will require the practitioner(s) to certify that he, she or they have: (1) given reasonable notice to the client, prior to the expiration of the reply period, which the practitioner(s) intends to withdraw from employment; (2) delivered to the client or a duly authorized representative of the client all papers and property (including funds) to which the client is entitled; and (3) notified the client of any replies that may be due and the time frame within which the client must respond, pursuant to 37 CFR 10.40 (c).

The request was signed by Coe F. Miles on behalf of all attorneys of record who are associated with Customer Number 29855.

All attorneys/agents associated with the Customer Number 29855 have been withdrawn. Applicants are reminded that there is no attorney of record at this time.

The correspondence address of record remains unchanged.

Currently, there is no outstanding Office action that requires a reply.

Telephone inquiries concerning this decision should be directed to the undersigned at (571) 272-7751. All other inquires concerning either the examination or status of the application should be directed to the Technology Center.

/Joan Olszewski/
Joan Olszewski
Petitions Examiner
Office of Petitions

UNITED STATES PATENT AND TRADEMARK OFFICE

Commissioner for Patents
United States Patent and Trademark Office
P.O. Box 1450
Alexandria, VA 22313-1450
www.uspto.gov

Weaver Austin Villeneuve & Sampson LLP - IGT
Attn: IGT
P.O. Box 70250
Oakland CA 94612-0250

MAILED

DEC 01 2010

OFFICE OF PETITIONS

In re Application of	:	
Cohen et al.	:	DECISION ON PETITION
Application No. 12/617,545	:	UNDER 37 CFR 1.47(a)
Filed: 11/12/2009	:	
Attorney Docket No. IGT1P613/P001429-001	:	
Title: TOUCH SCREEN DISPLAYS WITH PHYSICAL BUTTONS FOR GAMING DEVICES	:	

This is in response to the petition under 37 CFR 1.47(a) filed April 15, 2010.

The petition is **granted**.

Petitioner has shown that the non-signing inventor has refused to join in the filing of the above-identified application.

The above-identified application and papers have been reviewed and are found in compliance with 37 CFR 1.47(a). This application is hereby accorded Rule 1.47(a) status.

As provided in 37 CFR 1.47(a), this Office will forward notice of this application's filing to the non-signing inventor at the address given in the petition. Notice of the filing of this application will also be published in the Official Gazette.

The application file is being forwarded to the Office of Patent Application Processing.

Telephone inquiries regarding this decision should be directed to the undersigned at 571-272-3211.

C. T. Donnell

Christina Tartera Donnell
Senior Petitions Attorney
Office of Petitions

UNITED STATES PATENT AND TRADEMARK OFFICE

Commissioner for Patents
United States Patent and Trademark Office
P.O. Box 1450
Alexandria, VA 22313-1450
www.uspto.gov

John Goodman
10795 Cypress Garden Court
Reno NV 89521

MAILED

DEC 01 2010

OFFICE OF PETITIONS

In re Application of :
Cohen et al. :
Application No. 12/617,545 :
Filed: 11/12/2009 : LETTER
Title: TOUCH SCREEN DISPLAYS WITH :
PHYSICAL BUTTONS FOR GAMING DEVICES :

Dear Mr. Goodman:

You are named as a joint inventor in the above identified United States patent application, filed under the provisions of 35 U.S.C. 116 (United States Code), and 37 CFR 1.47(a), Rules of Practice in Patent Cases. Should a patent be granted on the application you will be designated therein as a joint inventor. As a named inventor you are entitled to inspect any paper in the file wrapper of the application, order copies of all or any part thereof (at a prepaid cost per 37 CFR 1.19) or make your position of record in the application. Alternatively, you may arrange to do any of the preceding through a registered patent attorney or agent presenting written authorization from you. If you care to join the application, counsel of record (see below) would presumably assist you. Joining in the application would entail the filing of an appropriate oath or declaration by you pursuant to 37 CFR 1.63. Requests for information regarding your application should be directed to the File Information Unit at 571- 272-3150. Information regarding how to pay for and order a copy of the application or a specific paper in the application, should be directed to Certification Division at 571-272-3150 or 1-800-972-6382 (outside the Washington D.C. area).

/s/

Christina Tartera Donnell
Senior Petitions Attorney
Office of Petitions

Weaver Austin Villeneuve & Sampson LLP - IGT
Attn: IGT
P.O. Box 70250
Oakland CA 94612-0250

Doc Code: PPH.PCT.652
Document Description: Petition to make special under PCT-Patent Pros Hwy

PTO/SB/20PCT-US (09-10)
Approved for use through 01/31/2012. OMB 0651-0058
U.S. Patent and Trademark Office; U. S. DEPARTMENT OF COMMERCE
Under the Paperwork Reduction Act of 1995, no persons are required to respond to a collection of information unless it displays a valid OMB control number.

REQUEST FOR PARTICIPATION IN THE PATENT COOPERATION TREATY - PATENT PROSECUTION HIGHWAY (PCT-PPH) PILOT PROGRAM IN A U.S. APPLICATION WHERE THE USPTO WAS THE ISA OR IPEA

Application No:	12/617,554	Filing date:	11/12/2009
First Named Inventor:	David Muller		
Title of the Invention:	Eye Therapy System		

THIS REQUEST FOR PARTICIPATION IN THE PCT-PPH PILOT PROGRAM ALONG WITH THE REQUIRED DOCUMENTS MUST BE SUBMITTED VIA EFS-WEB. INFORMATION REGARDING EFS-WEB IS AVAILABLE AT HTTP://WWW.USPTO.GOV/EBC/EFS_HELP.HTML

APPLICANT HEREBY REQUESTS PARTICIPATION IN THE PCT-PPH PROGRAM AND PETITIONS TO MAKE THE ABOVE-IDENTIFIED APPLICATION SPECIAL UNDER THE PCT-PPH PROGRAM.

The above-identified application is (1) a national stage entry of the corresponding PCT application, or (2) a national stage entry of another PCT application which claims priority to the corresponding PCT application, or (3) a national application that claims domestic/ foreign priority to the corresponding PCT application, or (4) a national application which forms the basis for the priority claim in the corresponding PCT application, or (5) a continuing application of a U.S. application that satisfies one of (1) to (4) above, or (6) a U.S. application that claims domestic benefit to a U.S. provisional application which forms the basis for the priority claim in the corresponding PCT application.

The corresponding PCT application number(s) is/are: PCT/US2009/064189

The international date of the corresponding PCT application(s) is/are:

November 12, 2009

I. List of Required Documents:

a. **A copy of the latest international work product (WO/ISA, WO/IPEA, or IPER) in the above–identified corresponding PCT application(s)**

☒ Is attached

☐ Is not attached because the document is already in the U.S. application.

b. **A copy of all claims which were indicated as having novelty, inventive step and industrial applicability in the above-identified corresponding PCT application(s).**

☒ Is attached.

☐ Is not attached because the document is already in the U.S. application.

c. **English translations of the documents in a. and b. above are attached (if the documents are not in the English language). A statement that the English translation is accurate is attached for the document in b. above.**

This collection of information is required by 35 U.S.C. 119, 37 CFR 1.55, and 37 CFR 1.102(d). The information is required to obtain or retain a benefit by the public, which is to file (and by the USPTO to process) an application. Confidentiality is governed by 35 U.S.C. 122 and 37 CFR 1.11 and 1.14. This collection is estimated to take 2 hours to complete, including gathering, preparing, and submitting the completed application form to the USPTO. Time will vary depending upon the individual case. Any comments on the amount of time you require to complete this form and/or suggestions for reducing this burden should be sent to the Chief Information Officer, U.S. Patent and Trademark Office, U.S. Department of Commerce, P.O. Box 1450, Alexandria, VA 22313-1450. DO NOT SEND FEES OR COMPLETED FORMS TO THIS ADDRESS.

PTO/SB/20PCT-US (09-10)
Approved for use through 01/31/2012. OMB 0651-0058
U.S.Patent and Trademark Office; U.S. DEPARTMENT OF COMMERCE
Under the Paperwork Reduction Act of 1995, no persons are required to respond to a collection of information unless it displays a valid OMB control number.

REQUEST FOR PARTICIPATION IN THE PCT-PPH PILOT PROGRAM IN A U.S. APPLICATION WHERE THE USPTO WAS THE ISA OR IPEA (continued)

Application No.:	12/617,554
First Named Inventor:	David Muller

d. **(1) An information disclosure statement listing the documents cited in the international work products (ISR, WO/ISA, WO/IPEA, IPER) of the corresponding PCT application.**

☒ Is attached

☐ Has already been filed in the above-identified U.S. application on _____

(2) Copies of all documents (except) for U.S. patents or U.S. patent application publications)

☒ Are attached.

☐ Have already been filed in the above-identified U.S. application on _____

II. Claims Correspondence Table:

Claims in US Application	Patentable Claims in the corresponding PCT Application	Explanation regarding the correspondence
7-10	7-10	Identical
19	19	US cl. 19 includes the identical subject matter of PCT cls. 19 & 17. Thus, US cl. 19 is narrower than PCT cl. 19.
26	26	Identical
38	38	Identical
47-50	47-50	Identical
58	58	US cl. 58 includes the identical subject matter of PCT cl.s 58 & 55. Thus, US cl. 58 is narrower than PCT cl. 58.
69	69	Identical
76	76	Identical

III. All the claims in the US application sufficiently correspond to the patentable claims in the corresponding PCT application.

Signature /Jason S. Kray, Reg. No. 66,926/	Date 09/07/11
Name (Print/Typed) Jason S. Kray	Registration Number 66,926

Privacy Act Statement

The **Privacy Act of 1974 (P.L. 93-579)** requires that you be given certain information in connection with your submission of the attached form related to a patent application or patent. Accordingly, pursuant to the requirements of the Act, please be advised that: (1) the general authority for the collection of this information is 35 U.S.C. 2(b)(2); (2) furnishing of the information solicited is voluntary; and (3) the principal purpose for which the information is used by the U.S. Patent and Trademark Office is to process and/or examine your submission related to a patent application or patent. If you do not furnish the requested information, the U.S. Patent and Trademark Office may not be able to process and/or examine your submission, which may result in termination of proceedings or abandonment of the application or expiration of the patent.

The information provided by you in this form will be subject to the following routine uses:

1. The information on this form will be treated confidentially to the extent allowed under the Freedom of Information Act (5 U.S.C. 552) and the Privacy Act (5 U.S.C 552a). Records from this system of records may be disclosed to the Department of Justice to determine whether disclosure of these records is required by the Freedom of Information Act.
2. A record from this system of records may be disclosed, as a routine use, in the course of presenting evidence to a court, magistrate, or administrative tribunal, including disclosures to opposing counsel in the course of settlement negotiations.
3. A record in this system of records may be disclosed, as a routine use, to a Member of Congress submitting a request involving an individual, to whom the record pertains, when the individual has requested assistance from the Member with respect to the subject matter of the record.
4. A record in this system of records may be disclosed, as a routine use, to a contractor of the Agency having need for the information in order to perform a contract. Recipients of information shall be required to comply with the requirements of the Privacy Act of 1974, as amended, pursuant to 5 U.S.C. 552a(m).
5. A record related to an International Application filed under the Patent Cooperation Treaty in this system of records may be disclosed, as a routine use, to the International Bureau of the World Intellectual Property Organization, pursuant to the Patent Cooperation Treaty.
6. A record in this system of records may be disclosed, as a routine use, to another federal agency for purposes of National Security review (35 U.S.C. 181) and for review pursuant to the Atomic Energy Act (42 U.S.C. 218(c)).
7. A record from this system of records may be disclosed, as a routine use, to the Administrator, General Services, or his/her designee, during an inspection of records conducted by GSA as part of that agency's responsibility to recommend improvements in records management practices and programs, under authority of 44 U.S.C. 2904 and 2906. Such disclosure shall be made in accordance with the GSA regulations governing inspection of records for this purpose, and any other relevant (*i.e.*, GSA or Commerce) directive. Such disclosure shall not be used to make determinations about individuals.
8. A record from this system of records may be disclosed, as a routine use, to the public after either publication of the application pursuant to 35 U.S.C. 122(b) or issuance of a patent pursuant to 35 U.S.C. 151. Further, a record may be disclosed, subject to the limitations of 37 CFR 1.14, as a routine use, to the public if the record was filed in an application which became abandoned or in which the proceedings were terminated and which application is referenced by either a published application, an application open to public inspection or an issued patent.
9. A record from this system of records may be disclosed, as a routine use, to a Federal, State, or local law enforcement agency, if the USPTO becomes aware of a violation or potential violation of law or regulation.

REQUIRED DOCUMENT I(A)

The following document(s) include(s) a copy of the latest international work product in the corresponding PCT application

PATENT COOPERATION TREATY

PCT

INTERNATIONAL PRELIMINARY REPORT ON PATENTABILITY

(Chapter I of the Patent Cooperation Treaty)

(PCT Rule 44*bis*)

Applicant's or agent's file reference 045439-25WOPT	**FOR FURTHER ACTION**	See item 4 below
International application No. PCT/US2009/064189	International filing date *(day/month/year)* 12 November 2009 (12.11.2009)	Priority date *(day/month/year)* 11 November 2008 (11.11.2008)
International Patent Classification (8th edition unless older edition indicated) See relevant information in Form PCT/ISA/237		
Applicant AVEDRO, INC.		

1. This international preliminary report on patentability (Chapter I) is issued by the International Bureau on behalf of the International Searching Authority under Rule 44 *bis*.1(a).

2. This REPORT consists of a total of 9 sheets, including this cover sheet.

   In the attached sheets, any reference to the written opinion of the International Searching Authority should be read as a reference to the international preliminary report on patentability (Chapter I) instead.

3. This report contains indications relating to the following items:

☒	Box No. I	Basis of the report
☐	Box No. II	Priority
☐	Box No. III	Non-establishment of opinion with regard to novelty, inventive step and industrial applicability
☐	Box No. IV	Lack of unity of invention
☒	Box No. V	Reasoned statement under Article 35(2) with regard to novelty, inventive step or industrial applicability; citations and explanations supporting such statement
☐	Box No. VI	Certain documents cited
☐	Box No. VII	Certain defects in the international application
☐	Box No. VIII	Certain observations on the international application

4. The International Bureau will communicate this report to designated Offices in accordance with Rules 44*bis*.3(c) and 93*bis*.1 but not, except where the applicant makes an express request under Article 23(2), before the expiration of 30 months from the priority date (Rule 44*bis* .2).

	Date of issuance of this report 17 May 2011 (17.05.2011)
The International Bureau of WIPO 34, chemin des Colombettes 1211 Geneva 20, Switzerland Facsimile No. +41 22 338 82 70	Authorized officer Philippe Becamel e-mail: pt12.pct@wipo.int

Form PCT/IB/373 (January 2004)

PATENT COOPERATION TREATY

From the
INTERNATIONAL SEARCHING AUTHORITY

To: JOEY YAO
NIXON PEABODY LLP
SUITE 900
401 9TH STREET, N.W.
WASHINGTON, DC 20004

PCT

WRITTEN OPINION OF THE
INTERNATIONAL SEARCHING AUTHORITY

(PCT Rule 43*bis*.1)

Date of mailing *(day/month/year)*	11 JAN 2010

Applicant's or agent's file reference	FOR FURTHER ACTION
045439-25WOPT	See paragraph 2 below

International application No.	International filing date *(day/month/year)*	Priority date *(day/month/year)*
PCT/US2009/064189	12 November 2009	11 November 2008

International Patent Classification (IPC) or both national classification and IPC
IPC(8) - A61B 18/18 (2010.01)
USPC - 606/5

Applicant AVEDRO, INC.

1. This opinion contains indications relating to the following items:

- ☒ Box No. I Basis of the opinion
- ☐ Box No. II Priority
- ☐ Box No. III Non-establishment of opinion with regard to novelty, inventive step and industrial applicability
- ☐ Box No. IV Lack of unity of invention
- ☒ Box No. V Reasoned statement under Rule 43*bis*.1(a)(i) with regard to novelty, inventive step or industrial applicability; citations and explanations supporting such statement
- ☐ Box No. VI Certain documents cited
- ☐ Box No. VII Certain defects in the international application
- ☐ Box No. VIII Certain observations on the international application

2. **FURTHER ACTION**

If a demand for international preliminary examination is made, this opinion will be considered to be a written opinion of the International Preliminary Examining Authority ("IPEA") except that this does not apply where the applicant chooses an Authority other than this one to be the IPEA and the chosen IPEA has notified the International Bureau under Rule 66.1*bis*(b) that written opinions of this International Searching Authority will not be so considered.

If this opinion is, as provided above, considered to be a written opinion of the IPEA, the applicant is invited to submit to the IPEA a written reply together, where appropriate, with amendments, before the expiration of 3 months from the date of mailing of Form PCT/ISA/220 or before the expiration of 22 months from the priority date, whichever expires later.

For further options, see Form PCT/ISA/220.

3. For further details, see notes to Form PCT/ISA/220.

Name and mailing address of the ISA/US	Date of completion of this opinion	Authorized officer:
Mail Stop PCT, Attn: ISA/US Commissioner for Patents P.O. Box 1450, Alexandria, Virginia 22313-1450 Facsimile No. 571-273-3201	23 December 2009	Blaine R. Copenheaver PCT Helpdesk: 571-272-4300 PCT OSP: 571-272-7774

WRITTEN OPINION OF THE
INTERNATIONAL SEARCHING AUTHORITY

International application No.
PCT/US2009/064189

Box No. I Basis of this opinion

1. With regard to the **language**, this opinion has been established on the basis of:

   ☒ the international application in the language in which it was filed.

   ☐ a translation of the international application into _____ which is the language of a translation furnished for the purposes of international search (Rules 12.3(a) and 23.1(b)).

2. ☐ This opinion has been established taking into account the **rectification of an obvious mistake** authorized by or notified to this Authority under Rule 91 (Rule 43*bis*.1(a))

3. With regard to any **nucleotide and/or amino acid sequence** disclosed in the international application, this opinion has been established on the basis of a sequence listing filed or furnished:

   a. (means)

   ☐ on paper

   ☐ in electronic form

   b. (time)

   ☐ in the international application as filed

   ☐ together with the international application in electronic form

   ☐ subsequently to this Authority for the purposes of search

4. ☐ In addition, in the case that more than one version or copy of a sequence listing has been filed or furnished, the required statements that the information in the subsequent or additional copies is identical to that in the application as filed or does not go beyond the application as filed, as appropriate, were furnished.

5. Additional comments:

WRITTEN OPINION OF THE INTERNATIONAL SEARCHING AUTHORITY

International application No.
PCT/US2009/064189

Box No. V **Reasoned statement under Rule 43*bis*.1(a)(i) with regard to novelty, inventive step or industrial applicability; citations and explanations supporting such statement**

1. Statement

Novelty (N)	Claims	5-10, 14, 19, 20, 26, 27, 32, 34-81	YES
	Claims	1-4, 11-13, 15-18, 21-25, 28-31, 33	NO
Inventive step (IS)	Claims	7-10, 19, 26, 38, 47-50, 58, 69, 76	YES
	Claims	1-6, 11-17, 18-25, 27-37, 39-46, 51-57, 59-68, 70-75, 77-81	NO
Industrial applicability (IA)	Claims	1-81	YES
	Claims	None	NO

2. Citations and explanations:

Claims 1-4, 11-13, 15-18, 21-25, 28-31, and 33 lack novelty under PCT Article 33(2) as being anticipated by Trembly '250.

Regarding claims 1, 16, and 22 Trembly '250 teaches a method for treating an eye disorder ([claims 1, 16, 22] thermokeratoplasty, Trembly '250: title), comprising supplying an amount of energy from an energy source ([claims 1, 16, 22] microwave or electrical signal generator, Trembly '250: par. 34) to a distal end of an applicator to apply therapy to an eye ([claims 1, 16, 22] Trembly '250: par. 4, 14, 19, 20), a first portion of the energy supplied to the applicator being transmitted through the distal end to the eye ([claims 1, 16, 22] Trembly '250: par. 14, 34, claim 3) and a second portion of the energy supplied to the applicator being reflected from the distal end ([claims 1, 16, 22] Trembly '250: par. 14); detecting a forward signal corresponding to the energy supplied to the applicator ([claims 1, 16, and 22] sensor, Trembly '250: par. 12, 13, 14); detecting a reflected signal corresponding to the reflected energy ([claims 1, 16, and 22] Trembly '250: par. 13, 14); determining an efficiency of energy transfer based on the forward signal and the reflected signal ([claim 22] Trembly '250: par. 14, 20); and based on the efficiency of energy transfer, modifying at least one adjustable parameter of a tuning element corresponding to the applicator ([claim 22] predetermined level of birefringence, Trembly '250: par. 16, 17); determining an amount of contact based on the signal ([claim 1] sensing whether full contact exist, Trembly '250: par. 56); supplying a coolant pulse to the eye ([claim 16] Trembly '250: par. 7, 18, 19); and the signal further corresponding to the coolant pulse ([claim 16] direct contact indicates no coolant fluid between the applicator (microwave conductive tube) and the corneal tissue, Trembly '250: par. 46; sensing where full contact exists, Trembly '250: par. 56).

Regarding claim 2 Trembly '250 teaches the invention as discussed in reference to claim 1, and further teaches ceasing supply of energy to the applicator based on the amount of contact (microwave applicator configured for use under direct contact, Trembly '250: par. 18; physical variable, Trembly '250: par. 35).

Regarding claim 3 Tremby '250 teaches the invention as discussed in reference to claim 2 and further teaches ceasing supply of energy, moving the applicator towards the surface of the eye (Trembly '250: par. 46); and resuming supply of energy to the applicator (microwave field being generated upon direct contact, Trembly '250).

Regarding claim 4, Trembly '250 teaches the invention as discussed in reference to claim 1 and further teaches the amount of contact includes no contact (sensing whether full contact exist, Trembly '250: par. 56).

Regarding claim 11, Trembly '250 teaches the invention as discussed in reference to claim 1 and further teaches moving the applicator towards the eye until a desired amount of contact is determined based on the signal corresponding to the reflected energy (Trembly '250: par. 46).

Regarding claims 12 and 31 Trembly '250 teaches the invention as discussed in reference to of claims 1, 22, 34, wherein the applicator comprises a conducting element, the conducting element being configured to conduct energy from the energy source to apply therapy to an eye (Trembly '250: par. 21, 22, 24, 61, and 63); and a covering configured to be removably attached to the conducting element (Trembly '250: abstract; par. 57, 58, 63), the covering having an interface surface positionable at the eye (Trembly '250: par. 22), at least a portion of the interface surface including one or more dielectric materials (Trembly '250: par. 21, 24), the energy from the conducting element being deliverable to the eye through the interface surface (Trembly '250: par. 63).

Regarding claim 13, Trembly '250 teaches the invention as discussed in reference to claim 12 and further teaches the covering forms an enclosure over a portion of the conducting element (Trembly '250: par. 19 and 41) and the applicator further comprises a coolant delivery system (Trembly '250; par. 19, 41), the coolant delivery system being operable to deliver coolant within the enclosure to cool the interface surface of the covering and the eye (Trembly '250: par. 46, 47; fig. 1) and the enclosure preventing the coolant from directly contacting the eye (Trembly '250: par. 46, 47).

Supplemental Box

In case the space in any of the preceding boxes is not sufficient.
Continuation of:

Regarding claims 15, 21, and 33 Trembly '250 teaches the invention as discussed in reference to claims 1, 16, and 22 respectively and further teaches the energy supplied to the applicator is a microwave energy (microwave or electrical signal generator, Trembly '250: par. 34).

Regarding claim 17 Trembly '250 teaches the invention as discussed in reference to claim 16 and further teaches a conducting element, the conducting element being configured to conduct energy from the energy source to apply therapy to an eye (Trembly '250: par. 21, 22, 24, 61, and 63); a covering configured to be removably attached to the conducting element (Trembly '250: abstract; par. 57, 58, 63), the covering having an interface surface positionable at the eye (Trembly '250: par. 22), at least a portion of the interface surface including one or more dielectric materials (Trembly '250: par. 21, 24), the energy from the conducting element being deliverable to the eye through the interface surface, the covering forming an enclosure over a portion of the conducting element (Trembly '250: par. 63); and a coolant delivery system (Trembly '250: par. 7, 18, 19), the coolant delivery system being operable to deliver coolant within the enclosure to cool the interface surface of the covering and the eye, and the enclosure preventing the coolant from directly contacting the eye (direct contact indicates no coolant fluid between the applicator (microwave conductive tube) and the corneal tissue, Trembly '250: par. 46; sensing where full contact exist, Trembly '250: par. 56).

Regarding claim 18 Trembly '250 teaches the invention as discussed in reference to claim 16 and further teaches the signal corresponds to the energy supplied to the applicator, the signal having a power, the power decreasing when coolant is delivered to the interface surface (power in the form of heat dissipated from the interface surface, Trembly '250: par. 58).

Regarding claim 23, Trembly '250 teaches the invention as discussed in reference to claim 22 and further teaches determining the efficiency of energy transfer comprises measuring at least one of a magnitude change and a phase change of the forward signal and the reflected signal (Trembly '250: par. 14, 16, 17, 20).

Regarding claim 24, Trembly '250 teaches the invention as discussed in reference to claim 22 and further teaches the at least one adjustable parameter is an inductance (adjustable capacitance, whereas the inductance in proportional to the capacitance any adjust to the capacitance includes adjusting the inductance, Trembly '250: par. 56).

Regarding claim 25, Trembly '250 teaches the invention as discussed in reference to claim 22 and further teaches the at least one adjustable parameter is a capacitance (Trembly '250: par. 56).

Regarding claim 28, Trembly '250 teaches the invention as discussed in reference to claim 22, and further teaches the tuning element integral with the applicator (Trembly '250: par. 16, 17).

Regarding claim 29, Trembly '250 teaches the invention as discussed in reference to claim 22, and further teaches the tuning element comprises an inner conductor (Trembly '250: par. 46), an outer conductor and a short connector (Trembly '250: par. 46), the inner conductor arid the outer conductor being concentric cylinders having a gap therebetween (Trembly '250: fig. 3; par. 46, 47), the short connector electrically connecting the inner conductor to the outer conductor, the short connector being axially moveable within the gap (Trembly '250: par. 47).

Regarding claim 30, Trembly '250 teaches the invention as discussed in reference to claim 29, and further teaches the tuning element further comprises a controller configured to provide signals to a motor, the motor being configured to mechanically move the short connector within the gap (Trembly '250: par. 24, 34, 41, 53).

Claims 5, 6, and 27 lack an inventive step under PCT Article 33(3) as being obvious over Trembly '250.

Regarding claim 5, Trembly '250 teaches the signal corresponding to the reflected energy having a power and detecting said signal as discussed in reference to claim 1, but does not specifically disclose detecting a decrease in the power. It would have been obvious to one of ordinary skill in the art at the time of the invention to include detecting a decrease in power as using a detecting means for sensing variation is power such as increases and decreases in power are well known in the art.

Regarding claim 6, Trembly '250 teaches the signal corresponding to the reflected energy having a power and detecting said signal as discussed in reference to claim 1, but does not specifically disclose detecting an increase in the power. It would have been obvious to one of ordinary skill in the art at the time of the invention to include detecting a increase in power as using a detecting means for sensing variation is power such as increases and decreases in power are well known in the art.

Regarding claim 27, Trembly '250 teaches the invention as discussed in reference to claim 22 and further teaches the tuning element and the applicator, but is silent regarding how the tuning element and applicator are electrically connected.
It would have been obvious to one of ordinary skill in the art to connect the tuning element and applicator in parallel as parallel electrical connections are well known in the art.

WRITTEN OPINION OF THE
INTERNATIONAL SEARCHING AUTHORITY

International application No.
PCT/US2009/064189

Supplemental Box

In case the space in any of the preceding boxes is not sufficient.
Continuation of:

Claims 34-37 and 39-44 lack an inventive step under PCT Article 33(3) as being obvious over Trembly '250 in view of Goth et al. hereinafter referred to as Goth.

Regarding claim 34, Trembly '250 teaches a method for treating an eye disorder (Thermokeratoplasty, Trembly '250: title), comprising: supplying an amount of energy from an energy source (microwave or electrical signal generator, Trembly '250: par. 34) to a distal end of an applicator to apply therapy to an eye (Trembly '250: par. 4, 14, 19, 20), a first portion of the energy supplied to the applicator being transmitted through the distal end to the eye (Trembly '250: par. 14, 34, claim 3) and a second portion of the energy supplied to the applicator being reflected from the distal end (Trembly '250: par. 14); detecting a forward signal corresponding to the energy supplied to the applicator (sensor, Trembly '250: par. 12, 13, 14); detecting a reflected signal corresponding to the reflected energy (Trembly '250: par. 13, 14); but is silent regarding determining an impedance mismatch between the eye and the applicator based on the forward signal and the reflected signal; and based on the impedance mismatch, modifying at least one adjustable parameter of a tuning element corresponding to the applicator.
Goth teaches a thermokeratoplasty system and method including; determining an impedance mismatch between the eye and the applicator based on the forward signal and the reflected signal (Goth: par. 17, 27, 48, 49; figs. 6-8); and based on the impedance mismatch, modifying at least one adjustable parameter of a tuning element corresponding to the applicator (Goth: par. 30, 32, 52). It would have been obvious to one of ordinary skill in the art at the time of the invention to provide the system and method Trembly '250 with the impedance detection and monitoring sensors of Goth to vary the energy delivered to the eye (Goth: abstract).

Regarding claim 35 modified Trembly '250 teaches the invention as discussed in reference to claim 34 and further teaches the determining the impedance mismatch comprises measuring at least one of a magnitude change and a phase change of the forward signal and the reflected signal (Trembly '250: par. 14, 16, 17, 20).

Regarding claim 36, Trembly '250 teaches the invention as discussed in reference to claim 34 and further teaches the at least one adjustable parameter is an inductance (adjustable capacitance, whereas the inductance in proportional to the capacitance any adjust to the capacitance includes adjusting the inductance, Trembly '250: par. 56).

Regarding claim 37, Trembly '250 teaches the invention as discussed in reference to claim 34 and further teaches the at least one adjustable parameter is a capacitance (Trembly '250: par. 56).

Regarding claim 39, Trembly '250 teaches the invention as discussed in reference to claim 34 and further teaches the tuning element and the applicator, but is silent regarding how the tuning element and applicator are electrically connected.
It would have been obvious to one of ordinary skill in the art at the time of the invention to connect the tuning element and applicator in parallel as parallel electrical connections are well known in the art.

Regarding claim 40, Trembly '250 teaches the invention as discussed in reference to claim 34, and further teaches the tuning element integral with the applicator (Trembly '250: par. 16, 17).

Regarding claim 41, Trembly '250 teaches the invention as discussed in reference to claim 34, and further teaches the tuning element comprises an inner conductor (Trembly '250: par. 46), an outer conductor and a short connector (Trembly '250: par. 46), the inner conductor arid the outer conductor being concentric cylinders having a gap therebetween (Trembly '250: fig. 3; par. 46, 47), the short connector electrically connecting the inner conductor to the outer conductor, the short connector being axially moveable within the gap (Trembly '250: par. 47).

Regarding claim 42 Trembly '250 teaches the method of claim 34, wherein the applicator comprises a conducting element, the conducting element being configured to conduct energy from the energy source to apply therapy to an eye (Trembly '250: par. 21, 22, 24, 61, and 63); and a covering configured to be removably attached to the conducting element (Trembly '250: abstract; par. 57, 58, 63), the covering having an interface surface positionable at the eye (Trembly '250: par. 22), at least a portion of the interface surface including one or more dielectric materials (Trembly '250: par. 21, 24), the energy from the conducting element being deliverable to the eye through the interface surface (Trembly '250: par. 63).

Regarding claim 43 Trembly '250 teaches the invention as discussed in reference to claim 34 and further teaches a dual directional coupler detects the forward signal and the reflected signal (Trembly '250: par. 12, 13, 14).

Regarding claim 44 Trembly '250 teaches the invention as discussed in reference to claim 34 respectively and further teaches the energy supplied to the applicator is a microwave energy (microwave or electrical signal generator, Trembly '250: par. 34).

WRITTEN OPINION OF THE INTERNATIONAL SEARCHING AUTHORITY

International application No.
PCT/US2009/064189

Supplemental Box

In case **the space in any of the preceding boxes is not sufficient.**

Continuation of:

Claims 14, 20, 32, 45, 46, 51-57, 59-68, 70, and 71 lack an inventive step under PCT Article 33(3) as being obvious over Trembly '250 in view Berry.

Regarding claims 45, 54, and 61 Trembly '250 teaches a system for treating an eye disorder ([claims 45, 54, 61] Thermokeratoplasty, Trembly '250: title), comprising an energy source ([claims 45, 54, and 61] microwave or electrical signal generator, Trembly '250: par. 34); an applicator for applying therapy to an eye ([claims 45, 54, 61] Trembly '250: par. 4, 14, 19, 20), the applicator having a distal end, the applicator being configured to receive an amount of energy from the energy source ([claims 45, 54, 61] Trembly '250: par. 4, 14, 19, 20), a first portion of the energy received by the applicator being transmitted through the distal end to the eye ([claims 45, 54, 61] Trembly '250: par. 14, 34, claim 3) and a second portion of the energy received by the applicator being reflected from the distal end of the applicator ([claims 45, 54, 61] Trembly '250: par. 14); a coolant delivery system operable to deliver coolant to the eye ([claim 54] Trembly '250: par. 7, 18, 19); a tuning element having at least one adjustable parameter ([claim 22] predetermined level of birefringence, Trembly '250: par. 16, 17); one or more controllers configured to determine an efficiency of energy transfer based on the forward signal and the reflected signal and configured to cause the at least one adjustable parameter to be modified based on the efficiency of energy transfer ([claims 61] predetermined level of birefringence, Trembly '250: par. 16, 17); detecting a forward signal corresponding to the energy supplied to the applicator ([claims 45, 54, and 61] sensor, Trembly '250: par. 12, 13, 14); detecting a reflected signal corresponding to the reflected energy ([claims 45, 54, and 61] Trembly '250: par. 13, 14); but is silent regarding a dual directional coupler.
Berry teaches an apparatus for cornea reshaping (Berry: title, abstract). Berry further teaches a dual directional coupler (Berry: col. 1, lines 23-34). It would have been obvious to one of ordinary skill in the art at the time of the invention to provide the system of Trembly '250 with the dual directional coupler of Berry to correct ocular refractive disorders (Berry: abstract).

Regarding claim 46, Trembly '250 teaches the invention as discussed in reference to claim 45 and further teaches the amount of contact includes no contact (sensing whether full contact exist, Trembly '250: par. 56).

Regarding claim 53, 60, 71, and 81 Trembly '250 teaches the invention as discussed in reference to claim 45, 54, 61, and 72 respectively; and further teaches the energy supplied to the applicator is a microwave energy (microwave or electrical signal generator, Trembly '250: par. 34).

Regarding claims 14, 20, and 32 Trembly '250 teaches the invention as discussed in reference to claims 1, 16, and 22 respectively; but is silent regarding the detecting is performed by a dual directional coupler. Berry teaches a dual directional coupler (Berry: col. 1, lines 23-34) and further teaches the coupler functioning as a detector (Berry: col. 4, lines 3-6; col. 6, lines 22-26; col. 13, lines 23-32). It would have been obvious to one of ordinary skill in the art at the time of the invention to provide the system of Trembly '250 with the dual directional coupler of Berry to correct ocular refractive disorders (Berry: abstract).

Regarding claims 51, 55, and 70 Trembly '250 teaches the invention as discussed in reference to claims 45, 54, 61, and 72 respectively. Trembly '250 further teaches the applicator comprising a conducting element, the conducting element being configured to conduct energy from the energy source to apply therapy to an eye (Trembly '250: par. 21, 22, 24, 61, and 63); and a covering configured to be removably attached to the conducting element (Trembly '250: abstract; par. 57, 58, 63), the covering having an interface surface positionable at the eye (Trembly '250: par. 22), at least a portion of the interface surface including one or more dielectric materials (Trembly '250: par. 21, 24), the energy from the conducting element being deliverable to the eye through the interface surface (Trembly '250: par. 63).

Regarding claims 52 and 56 Trembly '250 teaches the invention as discussed in reference to claim 51 and 55. Trembly further teaches the covering forms an enclosure over a portion of the conducting element (Trembly '250: par. 19 and 41) and the applicator further comprises a coolant delivery system (Trembly '250; par. 19, 41), the coolant delivery system being operable to deliver coolant within the enclosure to cool the interface surface of the covering and the eye (Trembly '250: par. 46, 47; fig. 1) and the enclosure preventing the coolant from directly contacting the eye (Trembly '250: par. 46, 47).

Regarding claim 57 Trembly '250 teaches the invention as discussed in reference to claim 54 and further teaches the signal corresponds to the energy supplied to the applicator, the signal having a power, the power decreasing when coolant is delivered to the interface surface (power in the form of heat dissipated from the interface surface, Trembly '250: par. 58).

Regarding claim 59 Trembly '250 teaches the invention as discussed in reference to claim 54 and further teaches the signal corresponds to the energy reflected from the distal end of the applicator, the signal having a power, the power decreasing when coolant is delivered to the interface surface (power in the form of heat dissipated from the interface surface, Trembly '250: par. 58).

Regarding claim 62, Trembly '250 teaches the invention including the dual directional coupler as discussed in reference to claim 61 and further teaches the at least one of a magnitude sensor and a phase sensor in electrical communication with the dual directional coupler to determine the efficiency of energy transfer based on the forward signal and the reflected signal (Trembly '250: par. 14, 16, 17, 20).

WRITTEN OPINION OF THE INTERNATIONAL SEARCHING AUTHORITY

International application No.
PCT/US2009/064189

Supplemental Box

In case **the space in any of the preceding boxes is not sufficient.**
Continuation of:

Regarding claim 63, Trembly '250 teaches the invention as discussed in reference to claim 61 and further teaches the at least one adjustable parameter is an inductance (adjustable capacitance, whereas the inductance in proportional to the capacitance any adjust to the capacitance includes adjusting the inductance, Trembly '250: par. 56).

Regarding claim 64, Trembly '250 teaches the invention as discussed in reference to claim 61 and further teaches the at least one adjustable parameter is a capacitance (Trembly '250: par. 56).

Regarding claim 65, Trembly '250 teaches the invention as discussed in reference to claim 61 and further teaches the tuning element and the applicator, but is silent regarding how the tuning element and applicator are electrically connected.
It would have been obvious to one of ordinary skill in the art at the time of the invention to connect the tuning element and applicator in parallel as parallel electrical connections are well known in the art.

Regarding claim 66, Trembly '250 teaches the invention as discussed in reference to claim 61, and further teaches the tuning element integral with the applicator (Trembly '250: par. 16, 17).

Regarding claim 67, Trembly '250 teaches the invention as discussed in reference to claim 61, and further teaches the tuning element comprises an inner conductor (Trembly '250: par. 46), an outer conductor and a short connector (Trembly '250: par. 46), the inner conductor arid the outer conductor being concentric cylinders having a gap therebetween (Trembly '250: fig. 3; par. 46, 47), the short connector electrically connecting the inner conductor to the outer conductor, the short connector being axially moveable within the gap (Trembly '250: par. 47).

Regarding claim 68, Trembly '250 teaches the invention as discussed in reference to claim 67, and further teaches the tuning element further comprises a controller configured to provide signals to a motor, the motor being configured to mechanically move the short connector within the gap (Trembly '250: par. 24, 34, 41, 53).

Claim 72-75, and 77-81 lack an inventive step under PCT Article 33(3) as being obvious over Trembly '250 in view of Berry in further view of Goth.

Regarding claim 72 Trembly '250 teaches a system for treating an eye disorder (thermokeratoplasty, Trembly '250: title), comprising:
an energy source (microwave or electrical signal generator, Trembly '250: par. 34); an applicator for applying therapy to an eye (Trembly '250: par. 4, 14, 19, 20), the applicator having a distal end, the applicator being configured to receive an amount of energy from the energy source (Trembly '250: par. 4, 14, 19, 20), a first portion of the energy received by the applicator being transmitted through the distal end to the eye (Trembly '250: par. 14, 34, claim 3) and a second portion of the energy received by the applicator being reflected from the distal end of the applicator (Trembly '250: par. 14); a coolant delivery system operable to deliver coolant to the eye (Trembly '250: par. 7, 18, 19); a tuning element having at least one adjustable parameter (predetermined level of birefringence, Trembly '250: par. 16, 17); one or more controllers configured to determine an efficiency of energy transfer based on the forward signal and the reflected signal and configured to cause the at least one adjustable parameter to be modified based on the efficiency of energy transfer (predetermined level of birefringence, Trembly '250: par. 16, 17); detecting a forward signal corresponding to the energy supplied to the applicator (sensor, Trembly '250: par. 12, 13, 14); detecting a reflected signal corresponding to the reflected energy (Trembly '250: par. 13, 14);
but is silent regarding a dual directional coupler.
Berry teaches an apparatus for cornea reshaping (Berry: title, abstract). Berry further teaches a dual directional coupler (Berry: col. 1, lines 23-34). It would have been obvious to one of ordinary skill in the art at the time of the invention to provide the system of Trembly '250 with the dual directional coupler of Berry to correct ocular refractive disorders (Berry: abstract).
Trembly '250 is also silent regarding an impedance mismatch.
Goth teaches a thermokeratoplasty system and method including; determining an impedance mismatch between the eye and the applicator based on the forward signal and the reflected signal (Goth: par. 17, 27, 48, 49; figs. 6-8); and
based on the impedance mismatch, modifying at least one adjustable parameter of a tuning element corresponding to the applicator (Goth: par. 30, 32, 52). It would have been obvious to one of ordinary skill in the art at the time of the invention to provide the system and method Trembly '250 with the impedance detection and monitoring sensors of Goth to vary the energy delivered to the eye (Goth: abstract).

Regarding claim 73, modified Trembly '250 teaches the invention including the dual directional coupler as discussed in reference to claim 72 and further teaches at feast one of a magnitude sensor and a phase sensor in electrical communication with the dual directional coupler to determine the impedance mismatch based on the forward signal and the reflected signal (Trembly '250: par. 14, 16, 17, 20).

Regarding claim 74, Trembly '250 teaches the invention as discussed in reference to claim 72 and further teaches the at least one adjustable parameter is an inductance (adjustable capacitance, whereas the inductance in proportional to the capacitance any adjust to the capacitance includes adjusting the inductance, Trembly '250: par. 56).

Regarding claim 75, Trembly '250 teaches the invention as discussed in reference to claim 72 and further teaches the at least one adjustable parameter is a capacitance (Trembly '250: par. 56).

Regarding claim 77, Trembly '250 teaches the invention as discussed in reference to claim 72 respectively, and further teaches the tuning element and the applicator, but is silent regarding how the tuning element and applicator are electrically connected.
It would have been obvious to one of ordinary skill in the art at the time of the invention to connect the tuning element and applicator in parallel as parallel electrical connections are well known in the art.

WRITTEN OPINION OF THE
INTERNATIONAL SEARCHING AUTHORITY

International application No.
PCT/US2009/064189

Supplemental Box

In case **the space in any of the preceding boxes is not sufficient.**
Continuation of:

Regarding claim 78, Trembly '250 teaches the invention as discussed in reference to claim 72, and further teaches the tuning element integral with the applicator (Trembly '250: par. 16, 17).

Regarding claim 79, Trembly '250 teaches the invention as discussed in reference to claim 72, and further teaches the tuning element comprises an inner conductor (Trembly '250: par. 46), an outer conductor and a short connector (Trembly '250: par. 46), the inner conductor arid the outer conductor being concentric cylinders having a gap therebetween (Trembly '250: fig. 3; par. 46, 47), the short connector electrically connecting the inner conductor to the outer conductor, the short connector being axially moveable within the gap (Trembly '250: par. 47).

Regarding claim 80 Trembly '250 teaches the invention as discussed in reference to claim 72 and further teaches the applicator comprising a conducting element, the conducting element being configured to conduct energy from the energy source to apply therapy to an eye (Trembly '250: par. 21, 22, 24, 61, and 63); and a covering configured to be removably attached to the conducting element (Trembly '250: abstract; par. 57, 58, 63), the covering having an interface surface positionable at the eye (Trembly '250: par. 22), at least a portion of the interface surface including one or more dielectric materials (Trembly '250: par. 21, 24), the energy from the conducting element being deliverable to the eye through the interface surface (Trembly '250: par. 63).

Regarding claim 81 Trembly '250 teaches the invention as discussed in reference to claim 72 and further teaches the energy supplied to the applicator is a microwave energy (microwave or electrical signal generator, Trembly '250: par. 34).

Claims 7-10, 19, 26, 38, 47-50, 58, 69, and 76 meet the criteria set out in PCT Article 33(2)-(3).

Regarding claims 7 and 47 the prior art does teach detecting the signal corresponding to reflected energy and detecting the power as discussed above, but the prior art does not teach or fairly suggest the reflected energy has a power that decreases as the amount of contact increases.

Regarding claims 8 and 48 meet the criteria set out in PCT Article 33(2)-(3) due to its dependence on claim 7 and 47 respectively.

Regarding claims 9 and 49 the prior art does teach detecting the signal corresponding to reflected energy and detecting the power as discussed above, but the prior art does not teach or fairly suggest the reflected energy has a power that increases as the amount of contact increases.

Regarding claims 10 and 50 meets the criteria set out in PCT Article 33(2)-(3) due to its dependence on claim 9 and 49 respectively.

Regarding claims 19 and 58 the prior art does teach the signal corresponding to the energy reflected from the distal end of the applicator, the signal having a power, the power decreasing when coolant is delivered to the interface surface as discussed in reference to claims 18 and 54 respectively, but the prior art does not teach or fairly suggest the power increasing when coolant is delivered to the interface surface.

Regarding claims 26, 38, 69, and 76 the prior art does teach invention as discussed in reference to claims 22, 34, 61 and 72 including the at least one adjustable parameter, but the prior art does not teach or fairly suggest the at least one adjustable parameter is not modified when the efficiency of energy transfer is determined to be greater than a first threshold value.

REQUIRED DOCUMENT I(B)

The following document(s) include(s) a copy of all claims which were indicated as having novelty, inventive step and industrial applicability in the corresponding PCT application

WHAT IS CLAIMED IS:

1. A method for treating an eye disorder, comprising:

positioning a distal end of an applicator at or proximate to a surface of an eye;

supplying an amount of energy from an energy source to the applicator to apply therapy to the eye, a first portion of the energy supplied to the applicator being transmitted through the distal end to the eye and a second portion of the energy supplied to the applicator being reflected from the distal end of the applicator;

detecting a signal corresponding to the reflected energy; and

determining an amount of contact based on the signal.

2. The method of claim 1 further comprising ceasing supply of energy to the applicator based on the amount of contact.

3. The method of claim 2 further comprising:

after ceasing supply of energy, moving the applicator towards the surface of the eye; and

resuming supply of energy to the applicator.

4. The method of claim 1, wherein the amount of contact includes no contact.

5. The method of claim 1, wherein the signal corresponding to the reflected energy has a power and the method further comprises detecting a decrease in the power.

6. The method of claim 1, wherein the signal corresponding to the reflected energy has a power and the method further comprises detecting an increase in the power.

7. The method of claim 1, wherein the signal corresponding to the reflected energy has a power that decreases as the amount of contact increases.

8. The method of claim 7, wherein the signal corresponding to the reflected energy has a power and the method further comprises determining whether the power is less than a threshold value.

9. The method of claim 1, wherein the signal corresponding to the reflected energy has a power that increases as the amount of contact increases.

10. The method of claim 9, wherein the signal corresponding to the reflected energy has a power and the method further comprises determining whether the power is greater than a threshold value.

11. The method of claim 1 further comprising moving the applicator towards the eye until a desired amount of contact is determined based on the signal corresponding to the reflected energy.

12. The method of claim 1, wherein the applicator comprises:

a conducting element, the conducting element being configured to conduct energy from the energy source to apply therapy to an eye; and

a covering configured to be removably attached to the conducting element, the covering having an interface surface positionable at the eye, at least a portion of the interface surface including one or more dielectric materials, the energy from the conducting element being deliverable to the eye through the interface surface.

13. The method of claim 12, wherein the covering forms an enclosure over a portion of the conducting element and the applicator further comprises a coolant delivery system, the coolant delivery system being operable to deliver coolant within the enclosure to cool the interface surface of the covering and the eye, and the enclosure preventing the coolant from directly contacting the eye.

14. The method of claim 1, wherein the detecting is performed by a dual directional coupler.

15. The method of claim 1, wherein the energy supplied to the applicator is a microwave energy.

16. A method for treating an eye disorder, comprising:

positioning a distal end of an applicator at or proximate to an eye;

supplying an amount of energy to the applicator from an energy source to apply therapy to the eye, a first portion of the energy supplied to the applicator being transmitted through the distal end to the eye and a second portion of the energy supplied to the applicator being reflected from the distal end;

supplying a coolant pulse to the eye; and

detecting a signal corresponding to at least one of the energy supplied to the applicator and the energy reflected from the distal end, the signal further corresponding to the coolant pulse.

17. The method of claim 16, wherein the applicator comprises:

a conducting element, the conducting element being configured to conduct energy from the energy source to apply therapy to an eye;

a covering configured to be removably attached to the conducting element, the covering having an interface surface positionable at the eye, at least a portion of the interface surface including one or more dielectric materials, the energy from the conducting element being deliverable to the eye through the interface surface, the covering forming an enclosure over a portion of the conducting element; and

a coolant delivery system, the coolant delivery system being operable to deliver coolant within the enclosure to cool the interface surface of the covering and the eye, and the enclosure preventing the coolant from directly contacting the eye.

18. The method of claim 16, wherein the signal corresponds to the energy supplied to the applicator, the signal having a power, the power decreasing when coolant is delivered to the interface surface.

19. The method of claim 16, wherein the signal corresponds to the energy reflected from the distal end of the applicator, the signal having a power, the power increasing when coolant is delivered to the interface surface.

20. The method of claim 16, wherein the detecting is performed by a dual directional coupler.

21. The method of claim 16, wherein the energy supplied to the applicator is a microwave energy.

22. A method for treating an eye disorder, comprising:

supplying an amount of energy from an energy source to a distal end of an applicator to apply therapy to an eye, a first portion of the energy supplied to the applicator being transmitted through the distal end to the eye and a second portion of the energy supplied to the applicator being reflected from the distal end;

detecting a forward signal corresponding to the energy supplied to the applicator;

detecting a reflected signal corresponding to the reflected energy;

determining an efficiency of energy transfer based on the forward signal and the reflected signal; and

based on the efficiency of energy transfer, modifying at least one adjustable parameter of a tuning element corresponding to the applicator.

23. The method of claim 22, wherein the determining the efficiency of energy transfer comprises measuring at least one of a magnitude change and a phase change of the forward signal and the reflected signal.

24. The method of claim 22, wherein the at least one adjustable parameter is an inductance.

25. The method of claim 22, wherein the at least one adjustable parameter is a capacitance.

26. The method of claim 22, wherein the at least one adjustable parameter is not modified when the efficiency of energy transfer is determined to be greater than a first threshold value.

27. The method of claim 22, wherein the tuning element is electrically connected to the applicator in parallel.

28. The method of claim 22, wherein the tuning element is integral with the applicator.

29. The method of claim 22, wherein the tuning element comprises an inner conductor, an outer conductor and a short connector, the inner conductor and the outer conductor being concentric cylinders having a gap therebetween, the short connector electrically connecting the inner conductor to the outer conductor, the short connector being axially moveable within the gap.

30. The method of claim 29, wherein the tuning element further comprises a controller configured to provide signals to a motor, the motor being configured to mechanically move the short connector within the gap.

31. The method of claim 22, wherein the applicator comprises:

a conducting element, the conducting element being configured to conduct energy from the energy source to apply therapy to an eye; and

a covering configured to be removably attached to the conducting element, the covering having an interface surface positionable at the eye, at least a portion of the interface surface including one or more dielectric materials, the energy from the energy conducting element being deliverable to the eye through the interface surface.

32. The method of claim 22, wherein a dual directional coupler detects the forward signal and the reflected signal.

33. The method of claim 22, wherein the energy supplied to the applicator is a microwave energy.

34. A method for treating an eye disorder, comprising:

supplying an amount of energy from an energy source to a distal end of an applicator to apply therapy to an eye, a first portion of the energy supplied to the applicator

being transmitted through the distal end to the eye and a second portion of the energy supplied to the applicator being reflected from the distal end;

detecting a forward signal corresponding to the energy supplied to the applicator;

detecting a reflected signal corresponding to the reflected energy;

determining an impedance mismatch between the eye and the applicator based on the forward signal and the reflected signal; and

based on the impedance mismatch, modifying at least one adjustable parameter of a tuning element corresponding to the applicator.

35. The method of claim 34, wherein the determining the impedance mismatch comprises measuring at least one of a magnitude change and a phase change of the forward signal and the reflected signal.

36. The method of claim 34, wherein the at least one adjustable parameter is an inductance.

37. The method of claim 34, wherein the at least one adjustable parameter is a capacitance.

38. The method of claim 34, wherein the at least one adjustable parameter is not modified when the impedance mismatch is determined to be less than a threshold value.

39. The method of claim 34, wherein the tuning element is electrically connected to the applicator in parallel.

40. The method of claim 34, wherein the tuning element is integral with the applicator.

41. The method of claim 34, wherein the tuning element comprises an inner conductor, an outer conductor and a short connector, the inner conductor and the outer conductor being concentric cylinders having a gap therebetween, the short connector electrically connecting the inner conductor to the outer conductor, the short connector being axially moveable within the gap.

42. The method of claim 34, wherein the applicator comprises:

a conducting element, the conducting element being configured to conduct energy from the energy source to apply therapy to an eye; and

a covering configured to be removably attached to the conducting element, the covering having an interface surface positionable at the eye, at least a portion of the interface surface including one or more dielectric materials, the energy from the energy conducting element being deliverable to the eye through the interface surface.

43. The method of claim 34, wherein a dual directional coupler detects the forward signal and the reflected signal.

44. The method of claim 34, wherein the energy supplied to the applicator is a microwave energy.

45. A system for treating an eye disorder, comprising:

an energy source;

an applicator for applying therapy to an eye, the applicator having a distal end, the applicator being configured to receive an amount of energy from the energy source, a first portion of the energy received by the applicator being transmitted through the distal end to the eye and a second portion of the energy received by the applicator being reflected from the distal end of the applicator; and

a dual directional coupler configured to detect a signal corresponding to the reflected energy, the signal further corresponding to an amount of contact between the distal end and the eye.

46. The system of claim 45, wherein the amount of contact includes no contact.

47. The system of claim 45, wherein the signal corresponding to the reflected energy has a power that decreases as the amount of contact increases.

48. The system of claim 47, wherein the signal corresponding to the reflected energy has a power and the system further comprises a controller configured to determine whether the power is less than a threshold value.

49. The system of claim 45, wherein the signal corresponding to the reflected energy has a power that increases as the amount of contact increases.

50. The system of claim 49, wherein the signal corresponding to the reflected energy has a power and the system further comprises a controller configured to determine whether the power is greater than a threshold value.

51. The system of claim 45, wherein the applicator comprises:

a conducting element configured to conduct energy from the energy source to apply therapy to an eye; and

a covering configured to be removably attached to the conducting element, the covering having an interface surface positionable at the eye, at least a portion of the interface surface including one or more dielectric materials, the energy from the conducting element being deliverable to the eye through the interface surface.

52. The system of claim 51, wherein the covering forms an enclosure over a portion of the conducting element and the applicator further comprises a coolant delivery system, the coolant delivery system being operable to deliver coolant within the enclosure to cool the interface surface of the covering and the eye, and the enclosure preventing the coolant from directly contacting the eye.

53. The system of claim 45, wherein the energy supplied to the applicator is a microwave energy.

54. A system for treating an eye disorder, comprising:

an energy source;

an applicator for applying therapy to an eye, the applicator having a distal end, the applicator being configured to receive an amount of energy from the energy source, a first portion of the energy received by the applicator being transmitted through the distal end to the eye and a second portion of the energy received by the applicator being reflected from the distal end of the applicator;

a coolant delivery system operable to deliver coolant to cool the eye; and

a dual directional coupler configured to detect at least one of the energy received by the applicator and the energy reflected from the distal end, the signal further corresponding to the coolant pulse.

55. The system of claim 54, wherein the applicator comprises:

a conducting element, the conducting element being configured to conduct energy from the energy source to apply therapy to an eye;

a covering configured to be removably attached to the conducting element, the covering having an interface surface positionable at the eye, at least a portion of the interface surface including one or more dielectric materials, the energy from the conducting element being deliverable to the eye through the interface surface, the covering forming an enclosure over a portion of the conducting element; and

the coolant delivery system.

56. The system of claim 55, wherein the coolant delivery system delivers coolant within the enclosure to cool the interface surface of the covering and the eye, and the enclosure prevents the coolant from directly contacting the eye.

57. The system of claim 54, wherein the signal corresponds to the energy supplied to the applicator, the signal having a power, the power decreasing when coolant is delivered to the interface surface.

58. The system of claim 54, wherein the signal corresponds to the energy reflected from the distal end of the applicator, the signal having a power, the power increasing when coolant is delivered to the interface surface.

59. The system of claim 54, wherein the signal corresponds to the energy reflected from the distal end of the applicator, the signal having a power, the power decreasing when coolant is delivered to the interface surface.

60. The system of claim 54, wherein the energy supplied to the applicator is a microwave energy.

61. A system for treating an eye disorder, comprising:

an energy source;

an applicator for applying therapy to an eye, the applicator having a distal end, the applicator being configured to receive an amount of energy from the energy source, a first portion of the energy received by the applicator being transmitted through the distal end to the eye and a second portion of the energy received by the applicator being reflected from the distal end of the applicator;

a dual directional coupler configured to detect a forward signal corresponding to the energy received by the applicator and a reflected signal corresponding to the reflected energy;

a tuning element having at least one adjustable parameter; and

one or more controllers configured to determine an efficiency of energy transfer based on the forward signal and the reflected signal and configured to cause the at least one adjustable parameter to be modified based on the efficiency of energy transfer.

62. The system of claim 61 further comprising at least one of a magnitude sensor and a phase sensor in electrical communication with the dual directional coupler to determine the efficiency of energy transfer based on the forward signal and the reflected signal.

63. The system of claim 61, wherein the at least one adjustable parameter is an inductance.

64. The system of claim 61, wherein the at least one adjustable parameter is a capacitance.

65. The system of claim 61, wherein the tuning element is electrically connected to the applicator in parallel.

66. The system of claim 61, wherein the tuning element is integral with the applicator.

67. The system of claim 61, wherein the tuning element comprises an inner conductor, an outer conductor and a short connector, the inner conductor and the outer conductor being concentric cylinders having a gap therebetween, the short connector electrically connecting the inner conductor to the outer conductor, the short connector being axially moveable within the gap.

68. The system of claim 67, wherein the tuning element further comprises a controller configured to provide signals to a motor, the motor being configured to mechanically move the short connector within the gap.

69. The system of claim 61, wherein at least one controller is configured to not cause the at least one adjustable parameter to be modified when the efficiency of energy transfer is determined to be greater than a threshold value.

70. The system of claim 61, wherein the applicator comprises:

a conducting element configured to conduct energy from the energy source to apply therapy to an eye; and

a covering configured to be removably attached to the conducting element, the covering having an interface surface positionable at the eye, at least a portion of the interface surface including one or more dielectric materials, the energy from the energy conducting element being deliverable to the eye through the interface surface.

71. The system of claim 61, wherein the energy supplied to the applicator is a microwave energy.

72. A system for treating an eye disorder, comprising:

an energy source;

an applicator for applying therapy to an eye, the applicator having a distal end, the applicator being configured to receive an amount of energy from the energy source, a first portion of the energy received by the applicator being transmitted through the distal end to the eye and a second portion of the energy received by the applicator being reflected from the distal end of the applicator;

a dual directional coupler configured to detect a forward signal corresponding to the energy received by the applicator and a reflected signal corresponding to the reflected energy;

a tuning element having at least one adjustable parameter; and

one or more controllers configured to determine an impedance mismatch between the eye and the applicator based on the forward signal and the reflected signal and configured to cause the at least one adjustable parameter to be modified based on the impedance mismatch.

73. The system of claim 72 further comprising at least one of a magnitude sensor and a phase sensor in electrical communication with the dual directional coupler to determine the impedance mismatch based on the forward signal and the reflected signal.

74. The system of claim 72, wherein the at least one adjustable parameter is an inductance.

75. The system of claim 72, wherein the at least one adjustable parameter is a capacitance.

76. The system of claim 72, wherein the at least one controller is configured to not cause the at least one adjustable parameter to be modified when the impedance mismatch is determined to be less than a threshold value.

77. The system of claim 72, wherein the tuning element is electrically connected to the applicator in parallel.

78. The system of claim 72, wherein the tuning element is integral with the applicator.

79. The system of claim 72, wherein the tuning element comprises an inner conductor, an outer conductor and a short connector, the inner conductor and the outer conductor being concentric cylinders having a gap therebetween, the short connector electrically connecting the inner conductor to the outer conductor, the short connector being axially moveable within the gap.

80. The system of claim 72, wherein the applicator comprises:

a conducting element configured to conduct energy from the energy source to apply therapy to an eye; and

a covering configured to be removably attached to the conducting element, the covering having an interface surface positionable at the eye, at least a portion of the interface surface including one or more dielectric materials, the energy from the energy conducting element being deliverable to the eye through the interface surface.

81. The system of claim 72, wherein the energy supplied to the applicator is a microwave energy.

UNITED STATES PATENT AND TRADEMARK OFFICE

UNITED STATES DEPARTMENT OF COMMERCE
United States Patent and Trademark Office
Address: COMMISSIONER FOR PATENTS
P.O. Box 1450
Alexandria, Virginia 22313-1450
www.uspto.gov

APPLICATION NO.	FILING DATE	FIRST NAMED INVENTOR	ATTORNEY DOCKET NO.	CONFIRMATION NO.
12/617,554	11/12/2009	David Muller	045439-000025USPT	4802

70001 7590 09/18/2011

NIXON PEABODY, LLP
300 S. Riverside Plaza, 16th Floor
CHICAGO, IL 60606-6613

EXAMINER	
DVORAK, LINDA C	

ART UNIT	PAPER NUMBER
3739	

MAIL DATE	DELIVERY MODE
09/18/2011	PAPER

Please find below and/or attached an Office communication concerning this application or proceeding.

The time period for reply, if any, is set in the attached communication.

UNITED STATES PATENT AND TRADEMARK OFFICE

Commissioner for Patents
United States Patent and Trademark Office
P.O. Box 1450
Alexandria, VA 22313-1450
www.uspto.gov

NIXON PEABODY, LLP
300 S. Riverside Plaza, 16th Floor
CHICAGO IL 60606-6613

In re Application of	:	
MULLER, DAVID ,et al	:	DECISION ON REQUEST TO
Application No. 12/617,554	:	PARTICIPATE IN PATENT
Filed: Novermber 12, 2009	:	PCT/PROSECUTION HIGHWAY
Attorney Docket No. 045439-000025USPT	:	PROGRAM AND PETITION
For: EYE THERAPY SYSTEM	:	TO MAKE SPECIAL UNDER
	:	37 CFR 1.102(a)

This is a decision on the request to participate in the Patent Prosecution Highway (PPH) program and the petition under 37 CFR 1.102(a), filed September 07, 2011 to make the above-identified application special.

The request and petition are granted.

A grantable request to participate in the PPH pilot program and petition to make special require:

(1) The U.S. application must validly claim priority under 35 U.S.C. 119(a) to one or more applications filed in the JPO;
(2) Applicant must submit a copy of the allowable/patentable claim(s) from the JPO/PCT application(s) along with an English translation thereof and a statement that the English translation is accurate;
(3) All the claims in the U.S. application must sufficiently correspond or be amended to sufficiently correspond to the allowable/patentable claim(s) in the JPO application(s);
(4) Examination of the U.S. application has not begun;
(5) Applicant must submit a copy of all the office actions from each of the JPO/PCT application(s) containing the allowable/patentable claim(s) along with an English translation thereof and a statement that the English translation is accurate; and
(6) Applicant must submit an IDS listing the documents cited by the JPO examiner in the JPO office action along with copies of documents except U.S. patents or U.S. patent application publications.
In light of the petition being properly submitted, the request to participate in the PPH program and the petition comply with the above requirements. Accordingly, the above-identified application has been accorded "special" status.

The applicant is encouraged to cite and submit all relevant prior art references, if any, to facilitate examination in this application. Upon completion of pre-examination processing, this application will be forwarded to an examiner for examination.

Telephone inquiries concerning this decision should be directed to Henry C. Yuen at 571-272-4485. All other inquiries concerning the examination or status of the application should be directed to Linda Dvorak, SPE of Art Unit 3739, and 571-272-4764 for Class 606 and also accessible in the PAIR system at http://www.uspto.gov/ebc.index.html.

Petition is **granted**.

/Henry C. Yuen/

Henry C. Yuen, Special Programs Examiner
Technology Center 3700 – Mechanical Engineering,
Manufacturing and Products
571-272-4856

Doc Code: PET.GREEN
Document Description: Petition for Green Tech Pilot

PTO/SB/420 (05-10)
Approved for use through 01/31/2011. OMB 0651-0062
U.S. Patent and Trademark Office; U. S. DEPARTMENT OF COMMERCE
Under the Paperwork Reduction Act of 1995, no persons are required to respond to a collection of information unless it displays a valid OMB control number.

PETITION TO MAKE SPECIAL UNDER THE GREEN TECHNOLOGY PILOT PROGRAM

Attorney Docket Number: XIC011 US	Application Number (if known): 12/617,668	Filing date: Nov. 12, 2009

First Named Inventor: Gerard Harbers

Title: Light Emitting Diode Module With Three Part Color Matching

APPLICANT HEREBY REQUESTS TO PARTICIPATE IN THE GREEN TECHNOLOGY PILOT PROGRAM FOR THE ABOVE-IDENTIFIED APPLICATION. **See Instruction Sheet on page 2.**

This petition must be timely filed electronically using the USPTO electronic filing system, EFS-Web.

1. By filing this petition:

   Applicant is requesting early publication: Applicant hereby requests early publication under 37 CFR 1.219 and the publication fee set forth in 37 CFR 1.18(d) accompanies this request.

2. By filing this petition: applicant is agreeing to make an election without traverse in a telephonic interview and elect an invention that meets the eligibility requirements set forth in the notice titled "Pilot Program for Green Technologies Including Greenhouse Gas Reduction," as modified by the notice titled "Elimination of Classification Requirement in the Green Technology Pilot Program," each of which was published in the Federal Register, if the Office determines that the claims are not obviously directed to a single invention.

3. This request is accompanied by statements of special status for the eligibility requirement.

4. The application contains no more than three (3) independent claims and twenty (20) total claims.

5. The application does not contain any multiple dependent claims.

6. Other attachments: Preliminary Amendment; Declaration of Mark Pugh

Signature /Michael J. Halbert/	Date 11/5/2010
Name (Print/Typed) Michael J. Halbert	Registration Number 40,633

Note: *Signatures of all the inventors or assignees of record of the entire interest or their representative(s) are required in accordance with 37 CFR 1.33 and 11.18. Please see 37 CFR 1.4(d) for the form of the signature. If necessary, submit multiple forms for more than one signature, see below*.*

☑ *Total of 4 forms are submitted.

The information is required to obtain or retain a benefit by the public which is to file (and by the USPTO to process) an application. Confidentiality is governed by 35 U.S.C. 122 and 37 CFR 1.11 and 1.14. This collection is estimated to take 1 hour to complete, including gathering, preparing, and submitting the completed application form to the USPTO. Time will vary depending upon the individual case. Any comments on the amount of time you require to complete this form and/or suggestions for reducing this burden, should be sent to the Chief Information Officer, U.S. Patent and Trademark Office, U.S. Department of Commerce, P.O. Box 1450, Alexandria, VA 22313-1450. DO NOT SEND FEES OR COMPLETED FORMS TO THIS ADDRESS. **SEND TO: Commissioner for Patents, P.O. Box 1450, Alexandria, VA 22313-1450.**

If you need assistance in completing the form, call 1-800-PTO-9199 and select option 2.

PTO/SB/420 (05-10)
Approved for use through 01/31/2011. OMB 0651-0062
U.S. Patent and Trademark Office; U. S. DEPARTMENT OF COMMERCE
Under the Paperwork Reduction Act of 1995, no persons are required to respond to a collection of information unless it displays a valid OMB control number.

Instruction Sheet for Petition to Make Special Under the Green Technology Pilot Program

(Not to be Submitted to the USPTO)

***The following is a summary of the requirements** (for more information see the notices (i) "Pilot Program for Green Technologies Including Greenhouse Gas Reduction" and (ii) "Elimination of Classification Requirement in the Green Technology Pilot Program," available on the USPTO web site at http://www.uspto.gov/patents/init_events/green_tech.jsp):*

(1) The application must be a non-reissue, non-provisional utility application filed under 35 U.S.C. 111(a), or an international application that has entered the national stage in compliance with 35 U.S.C. 371. The application must be previously filed before the publication date of the notice cited above. Reexamination proceedings are excluded from this pilot program.

(2) The application must contain three or fewer independent claims and twenty or fewer total claims. The application must not contain any multiple dependent claims. For an application that contains more than three independent claims or twenty total claims, or multiple dependent claims, applicant must file a preliminary amendment in compliance with 37 CFR 1.121 to cancel the excess claims and/or the multiple dependent claims at the time the petition to make special is filed.

(3) The claims must be directed to a single invention that materially enhances the quality of the environment, or that materially contributes to: (1) the discovery or development of renewable energy resources; (2) the more efficient utilization and conservation of energy resources; or (3) green house gas emission reduction (see the eligibility requirements of sections II and III of the notice (i) cited above). The petition must include a statement that, if the USPTO determines that the claims are directed to multiple inventions (e.g., in a restriction requirement), applicant will agree to make an election without traverse in a telephonic interview, and elect an invention that meets the eligibility requirements in section II or III of the notice (i) cited above.

(4) The petition to make special must be timely filed electronically using the USPTO electronic filing system, EFS-Web, and selecting the document description of "Petition for Green Tech Pilot" on the EFS-Web screen. Applicant should use form PTO/SB/420, which is available as a Portable Document Format (PDF) fillable form in EFS-Web and on the USPTO Web site.

(5) The petition to make special must be filed at least one day prior to the date that a first Office action (which may be an Office action containing only a restriction requirement) appears in the Patent Application Information Retrieval (PAIR) system. Applicant may check the status of the application using PAIR.

(6) The petition to make special must be accompanied by a request for early publication in compliance with 37 CFR 1.219 and the publication fee set forth in 37 CFR 1.18(d).

Privacy Act Statement

The **Privacy Act of 1974 (P.L. 93-579)** requires that you be given certain information in connection with your submission of the attached form related to a patent application or patent. Accordingly, pursuant to the requirements of the Act, please be advised that: (1) the general authority for the collection of this information is 35 U.S.C. 2(b)(2); (2) furnishing of the information solicited is voluntary; and (3) the principal purpose for which the information is used by the U.S. Patent and Trademark Office is to process and/or examine your submission related to a patent application or patent. If you do not furnish the requested information, the U.S. Patent and Trademark Office may not be able to process and/or examine your submission, which may result in termination of proceedings or abandonment of the application or expiration of the patent.

The information provided by you in this form will be subject to the following routine uses:

1. The information on this form will be treated confidentially to the extent allowed under the Freedom of Information Act (5 U.S.C. 552) and the Privacy Act (5 U.S.C 552a). Records from this system of records may be disclosed to the Department of Justice to determine whether disclosure of these records is required by the Freedom of Information Act.
2. A record from this system of records may be disclosed, as a routine use, in the course of presenting evidence to a court, magistrate, or administrative tribunal, including disclosures to opposing counsel in the course of settlement negotiations.
3. A record in this system of records may be disclosed, as a routine use, to a Member of Congress submitting a request involving an individual, to whom the record pertains, when the individual has requested assistance from the Member with respect to the subject matter of the record.
4. A record in this system of records may be disclosed, as a routine use, to a contractor of the Agency having need for the information in order to perform a contract. Recipients of information shall be required to comply with the requirements of the Privacy Act of 1974, as amended, pursuant to 5 U.S.C. 552a(m).
5. A record related to an International Application filed under the Patent Cooperation Treaty in this system of records may be disclosed, as a routine use, to the International Bureau of the World Intellectual Property Organization, pursuant to the Patent Cooperation Treaty.
6. A record in this system of records may be disclosed, as a routine use, to another federal agency for purposes of National Security review (35 U.S.C. 181) and for review pursuant to the Atomic Energy Act (42 U.S.C. 218(c)).
7. A record from this system of records may be disclosed, as a routine use, to the Administrator, General Services, or his/her designee, during an inspection of records conducted by GSA as part of that agency's responsibility to recommend improvements in records management practices and programs, under authority of 44 U.S.C. 2904 and 2906. Such disclosure shall be made in accordance with the GSA regulations governing inspection of records for this purpose, and any other relevant (*i.e.*, GSA or Commerce) directive. Such disclosure shall not be used to make determinations about individuals.
8. A record from this system of records may be disclosed, as a routine use, to the public after either publication of the application pursuant to 35 U.S.C. 122(b) or issuance of a patent pursuant to 35 U.S.C. 151. Further, a record may be disclosed, subject to the limitations of 37 CFR 1.14, as a routine use, to the public if the record was filed in an application which became abandoned or in which the proceedings were terminated and which application is referenced by either a published application, an application open to public inspection or an issued patent.
9. A record from this system of records may be disclosed, as a routine use, to a Federal, State, or local law enforcement agency, if the USPTO becomes aware of a violation or potential violation of law or regulation.

UNITED STATES PATENT AND TRADEMARK OFFICE

UNITED STATES DEPARTMENT OF COMMERCE
United States Patent and Trademark Office
Address: COMMISSIONER FOR PATENTS
P.O. Box 1450
Alexandria, Virginia 22313-1450
www.uspto.gov

APPLICATION NO.	FILING DATE	FIRST NAMED INVENTOR	ATTORNEY DOCKET NO.	CONFIRMATION NO.
12/617,668	11/12/2009	Gerard Harbers	XIC011 US	5026

34036 7590 11/24/2010

Silicon Valley Patent Group LLP
18805 Cox Avenue
Suite 220
Saratoga, CA 95070

EXAMINER	
ART UNIT	PAPER NUMBER
2811	

MAIL DATE	DELIVERY MODE
11/24/2010	PAPER

Please find below and/or attached an Office communication concerning this application or proceeding.

The time period for reply, if any, is set in the attached communication.

UNITED STATES PATENT AND TRADEMARK OFFICE

Commissioner for Patents
United States Patent and Trademark Office
P.O. Box 1450
Alexandria, VA 22313-1450
www.uspto.gov

Silicon Valley Patent Group LLP
18805 Cox Avenue
Suite 220
Saratoga CA 95070

In re Application of	:	
HARBERS et al	:	DECISION ON PETITION
Application No. 12/617,668	:	TO MAKE SPECIAL UNDER
Filed: November 12, 2009	:	THE GREEN TECHNOLOGY
Attorney Docket No. XIC011 US	:	PILOT PROGRAM

This is a decision on the petition under 37 CFR 1.102, filed on November 05, 2010, to make the above-identified application special under the pilot program for applications pertaining to Green Technologies as set forth 74 Federal Register Notice 64666 (December 8, 2009) and amended by 75 Federal Register Notice 28554 (May 21, 2010) and 75 Federal Register Notice 69049 (November 10, 2010).

The petition is **GRANTED**.

A grantable petition to make an application special under 37 CFR 1.102 and the pilot program as set forth in 74 FR 64666 must be directed to a nonprovisional application filed under 35 USC 111(a) or be a national stage entry under 35 USC 371, exclusive of any reissue applications.

In order to qualify for special status, the following requirements must be met. 1) The application must have no more than 3 independent claims and no more than 20 total claims. 2) The application must not contain any multiple dependent claims. 3) The petition must state the basis for seeking special status, i.e., the claimed invention either: A) materially enhances the quality of the environment or B) materially contributes to: i) the discovery or development of renewable energy resources, ii) the more efficient utilization and conservation of energy resources, or iii) greenhouse gas emission reduction. 4) If the disclosure is not clear on its face that the claimed invention materially contributes under category (A) or (B), the petition must be accompanied by a statement by the applicant, assignee, or an attorney/agent registered to practice before the Office explaining how the materiality standard is met. 5) A statement that applicant will agree to make an election without traverse in a telephonic interview if a restriction requirement is made by the examiner. 6) The petition to make special must be filed electronically. 7) The petition must be filed at least one day prior to the date that a first Office Action appears in the Patent Application Information Retrieval (PAIR) system. 8) The petition must be accompanied by a request for early publication in compliance with 37 CFR 1.219 and include the publication fee as set forth in 37 CFR 1.18(d).

The requirement for a fee for consideration of the petition to make special for applications pertaining to Green Technologies has been waived.

The instant petition complies with items 1 – 8 above. Accordingly, the above-identified application has been accorded "special" status.

Telephone inquires concerning this decision should be directed to Lee W. Young at 571-272-4549.

The application is being forwarded to the Technology Center Art Unit 2811 for action in its regular turn.

Lee W. Young
Quality Assurance Specialist
Technology Center 2800

UNITED STATES PATENT AND TRADEMARK OFFICE

Commissioner for Patents
United States Patent and Trademark Office
P.O. Box 1450
Alexandria, VA 22313-1450
www.uspto.gov

Decision Date : February 13, 2012

In re Application of :

Chieh Chen

Application No : 12617673

Filed : 12-Nov-2009

Attorney Docket No : MAVN-001/01US 310621-2003

DECISION ON REQUEST TO WITHDRAW AS ATTORNEY/AGENTOF RECORD

This is an electronic decision on the Request to Withdraw as attorney or agent of record under 37 CFR § 1.36(b), filed February 13, 2012

The request is **APPROVED.**

The request was signed by William S. Galliani (registration no. 33885) on behalf of all attorneys/agents associated with Customer Number 58249 . All attorneys/agents associated with Cusotmer Number 58249 have been withdrawn.

Since there are no remaining attorneys of record, all future communications from the Office will be directed to the first named inventor or assignee that has properly made itself of record pursuant to 37 CFR 3.71, with correspondence address:

Name Maven Optronics Corp.
Name2
Address 1 4231 Wilkie Way
Address 2
City Palo Alto
State CA
Postal Code 94306
Country US

As a reminder, requester is required to inform the first named inventor or assignee that has properly made itself of record pursuant to 37 CFR 3.71 of the electronically processed petition.

Telephone inquiries concerning this decision should be directed to the Patent Electronic Business Center (EBC) at 866-217-9197.

Office of Petitions

Doc Code: PET.AUTO **Document Description: Petition automatically granted by EFS-Web**	PTO/SB/83 U.S. Patent and Trademark Office Department of Commerce

Electronic Petition Request	**REQUEST FOR WITHDRAWAL AS ATTORNEY OR AGENT AND CHANGE OF CORRESPONDENCE ADDRESS**
Application Number	12617673
Filing Date	12-Nov-2009
First Named Inventor	Chieh Chen
Art Unit	1715
Examiner Name	JAMES LIN
Attorney Docket Number	MAVN-001/01US 310621-2003
Title	System and Method for Forming a Thin-Film Phosphor Layer for Phosphor-Converted Light Emitting Devices

◉ Please withdraw me as attorney or agent for the above identified patent application and the practitioners of record associated with Customer Number: 58249

The reason(s) for this request are those described in 37 CFR:

10.40(b)(4)

Certifications

☒ I/We have given reasonable notice to the client, prior to the expiration of the response period, that the practitioner(s) intend to withdraw from employment

☒ I/We have delivered to the client or a duly authorized representative of the client all papers and property (including funds) to which the client is entitled

☒ I/We have notified the client of any responses that may be due and the time frame within which the client must respond

Change the correspondence address and direct all future correspondence to the first named inventor or assignee that has properly made itself of record pursuant to 37 CFR 3.71:

Name	Maven Optronics Corp.
Address	4231 Wilkie Way
City	Palo Alto
State	CA
Postal Code	94306
Country	US

I am authorized to sign on behalf of myself and all withdrawing practitioners.	
Signature	/William S. Galliani/
Name	William S. Galliani
Registration Number	33885

UNITED STATES PATENT AND TRADEMARK OFFICE

Commissioner for Patents
United States Patent and Trademark Office
P.O. Box 1450
Alexandria, VA 22313-1450
www.uspto.gov

Decision Date : February 13, 2012

In re Application of :

Chieh Chen

Application No : 12617680

Filed : 12-Nov-2009

Attorney Docket No : MAVN-002/01US 310621-2004

DECISION ON REQUEST TO WITHDRAW AS ATTORNEY/AGENTOF RECORD

This is an electronic decision on the Request to Withdraw as attorney or agent of record under 37 CFR § 1.36(b), filed February 13, 2012

The request is **APPROVED.**

The request was signed by William S. Galliani (registration no. 33885) on behalf of all attorneys/agents associated with Customer Number 58249 . All attorneys/agents associated with Cusotmer Number 58249 have been withdrawn.

Since there are no remaining attorneys of record, all future communications from the Office will be directed to the first named inventor or assignee that has properly made itself of record pursuant to 37 CFR 3.71, with correspondence address:

Name	Maven Optronics Corp.
Name2	
Address 1	4231 Wilkie Way
Address 2	
City	Palo Alto
State	CA
Postal Code	94306
Country	US

As a reminder, requester is required to inform the first named inventor or assignee that has properly made itself of record pursuant to 37 CFR 3.71 of the electronically processed petition.

Telephone inquiries concerning this decision should be directed to the Patent Electronic Business Center (EBC) at 866-217-9197.

Office of Petitions

Doc Code: PET.AUTO **Document Description: Petition automatically granted by EFS-Web**	PTO/SB/83 U.S. Patent and Trademark Office Department of Commerce

Electronic Petition Request	**REQUEST FOR WITHDRAWAL AS ATTORNEY OR AGENT AND CHANGE OF CORRESPONDENCE ADDRESS**
Application Number	12617680
Filing Date	12-Nov-2009
First Named Inventor	Chieh Chen
Art Unit	2889
Examiner Name	MICHAEL SANTONOCITO
Attorney Docket Number	MAVN-002/01US 310621-2004
Title	Phosphor-Coated Light Extraction Structures for Phosphor-Converted Light Emitting Devices

◉ Please withdraw me as attorney or agent for the above identified patent application and the practitioners of record associated with Customer Number: 58249

The reason(s) for this request are those described in 37 CFR:

10.40(b)(4)

Certifications

☒ I/We have given reasonable notice to the client, prior to the expiration of the response period, that the practitioner(s) intend to withdraw from employment

☒ I/We have delivered to the client or a duly authorized representative of the client all papers and property (including funds) to which the client is entitled

☒ I/We have notified the client of any responses that may be due and the time frame within which the client must respond

Change the correspondence address and direct all future correspondence to the first named inventor or assignee that has properly made itself of record pursuant to 37 CFR 3.71:

Name	Maven Optronics Corp.
Address	4231 Wilkie Way
City	Palo Alto
State	CA
Postal Code	94306
Country	US

I am authorized to sign on behalf of myself and all withdrawing practitioners.	
Signature	/William S. Galliani/
Name	William S. Galliani
Registration Number	33885

Doc Code: PET.AUTO **Document Description: Petition automatically granted by EFS-Web**	PTO/SB/83 U.S. Patent and Trademark Office Department of Commerce

Electronic Petition Request	**REQUEST FOR WITHDRAWAL AS ATTORNEY OR AGENT AND CHANGE OF CORRESPONDENCE ADDRESS**
Application Number	12617682
Filing Date	12-Nov-2009
First Named Inventor	Larry Hughes
Art Unit	2452
Examiner Name	NEERAJ UTREJA
Attorney Docket Number	LRHJ134055
Title	METHOD AND APPARATUS FOR CERTIFYING HYPERLINKS

◉ Please withdraw me as attorney or agent for the above identified patent application and the practitioners of record associated with Customer Number: 26389

The reason(s) for this request are those described in 37 CFR:

10.40(b)(4)

Certifications

☒ I/We have given reasonable notice to the client, prior to the expiration of the response period, that the practitioner(s) intend to withdraw from employment

☒ I/We have delivered to the client or a duly authorized representative of the client all papers and property (including funds) to which the client is entitled

☒ I/We have notified the client of any responses that may be due and the time frame within which the client must respond

Change the correspondence address and direct all future correspondence to the first named inventor or assignee that has properly made itself of record pursuant to 37 CFR 3.71:

Name	Larry J. Hughes, Jr.
Address	7820 Southeast 71st Street
City	Mercer Island
State	WA
Postal Code	98040
Country	US

I am authorized to sign on behalf of myself and all withdrawing practitioners.	
Signature	/David P. Sheldon/
Name	David P. Sheldon
Registration Number	62494

UNITED STATES PATENT AND TRADEMARK OFFICE

Commissioner for Patents
United States Patent and Trademark Office
P.O. Box 1450
Alexandria, VA 22313-1450
www.uspto.gov

Decision Date : September 12,2011

In re Application of :

Larry Hughes

Application No : 12617682

Filed : 12-Nov-2009

Attorney Docket No : LRHJ134055

DECISION ON REQUEST TO WITHDRAW AS ATTORNEY/AGENTOF RECORD

This is an electronic decision on the Request to Withdraw as attorney or agent of record under 37 CFR § 1.36(b), filed September 12,2011

The request is **APPROVED.**

The request was signed by David P. Sheldon (registration no. 62494) on behalf of all attorneys/agents associated with Customer Number 26389 . All attorneys/agents associated with Cusotmer Number 26389 have been withdrawn.

Since there are no remaining attorneys of record, all future communications from the Office will be directed to the first named inventor or assignee that has properly made itself of record pursuant to 37 CFR 3.71, with correspondence address:

Name	Larry J. Hughes, Jr.
Name2	
Address 1	7820 Southeast 71st Street
Address 2	
City	Mercer Island
State	WA
Postal Code	98040
Country	US

As a reminder, requester is required to inform the first named inventor or assignee that has properly made itself of record pursuant to 37 CFR 3.71 of the electronically processed petition.

Telephone inquiries concerning this decision should be directed to the Patent Electronic Business Center (EBC) at 866-217-9197.

Office of Petitions

UNITED STATES PATENT AND TRADEMARK OFFICE

Commissioner for Patents
United States Patent and Trademark Office
P.O. Box 1450
Alexandria, VA 22313-1450
www.uspto.gov

KEELING PATENTS AND TRADEMARKS, LLC
3310 KATY FREEWAY, 2nd Floor
HOUSTON TX 77007

MAILED

JAN 03 2011

OFFICE OF PETITIONS

In re Application of :
ROSINBAUM, Terry :
Application No. 12/617,687 :
Filed: November 12, 2009 :
Attorney Docket No. **1755.001** :

DECISION ON PETITION
TO WITHDRAW
FROM RECORD

This is a decision on the Request to Withdraw as attorney or agent of record under 37 C.F.R. § 1.36(b), filed December 01, 2010.

The request is **APPROVED**.

A grantable request to withdraw as attorney/agent of record must be signed by every attorney/agent seeking to withdraw or contain a clear indication that one attorney is signing on behalf of another/others. The Office requires the practitioner(s) requesting withdrawal to certify that he, she, or they have: (1) given reasonable notice to the client, prior to the expiration of the response period, that the practitioner(s) intends to withdraw from employment; (2) delivered to the client or a duly authorized representative of the client all papers and property (including funds) to which the client is entitled; and (3) notified the client of any responses that may be due and the time frame within which the client must respond, pursuant 37 CFR 10.40(c).

The request was signed by Thomas D. Gardner on behalf of all attorneys of record who are associated with customer No. 09809. All attorneys/agents associated have been withdrawn. Applicant is reminded that there is no attorney of record at this time.

All future correspondence will be directed to the first named inventor Terry Rosinbaum at the address indicated below.

There are no outstanding Office actions at this time.

Telephone inquiries concerning this decision should be directed to the undersigned at 571-272-4231.

Michelle R. Eason
Paralegal Specialist
Office of Petitions

cc: **TERRY ROSINBAUM**
P.O. BOX 296
HUNT, TX 78024

UNITED STATES PATENT AND TRADEMARK OFFICE

UNITED STATES DEPARTMENT OF COMMERCE
United States Patent and Trademark Office
Address: COMMISSIONER FOR PATENTS
P.O. Box 1450
Alexandria, Virginia 22313-1450
www.uspto.gov

APPLICATION NO.	FILING DATE	FIRST NAMED INVENTOR	ATTORNEY DOCKET NO.	CONFIRMATION NO.
12/617,747	11/13/2009	Jun SAITO	H&A-7309	5223

EXAMINER

7590 02/18/2011

MATTINGLY & MALUR, P.C.
1800 DIAGONAL ROAD
SUITE 370
ALEXANDRIA, VA 22314

ART UNIT	PAPER NUMBER
2195	

MAIL DATE	DELIVERY MODE
02/18/2011	PAPER

DECISION GRANTING PETITION UNDER 37 CFR 1.138(d)

The declaration of express abandonment is recognized

This is in response to the petition under 37 CFR 1.138(d), requesting for a refund of any previously paid search fee and excess claims fee in the above-identified application.

The petition is granted.

The express abandonment is recognized. Any previously paid search fee and excess claims fee are hereby refunded.

Telephone inquiries should be directed to the Office of Data Management at (571) 272-4200.

Patent Publication Branch
Office of Data Management

UNITED STATES PATENT AND TRADEMARK OFFICE

Commissioner for Patents
United States Patent and Trademark Office
P.O. Box 1450
Alexandria, VA 22313-1450
www.uspto.gov

Decision Date : March 23, 2012

In re Application of :

Brian Reid

Application No : 12617774

Filed : 13-Nov-2009

Attorney Docket No : 2400.005US2

DECISION ON REQUEST TO WITHDRAW AS ATTORNEY/AGENTOF RECORD

This is an electronic decision on the Request to Withdraw as attorney or agent of record under 37 CFR § 1.36(b), filed March 23, 2012

The request is **APPROVED.**

The request was signed by Jesse B. Ashe, III (registration no. 44513) on behalf of all attorneys/agents associated with Customer Number 21176 . All attorneys/agents associated with Cusotmer Number 21176 have been withdrawn.

Since there are no remaining attorneys of record, all future communications from the Office will be directed to the first named inventor or assignee that has properly made itself of record pursuant to 37 CFR 3.71, with correspondence address:

Name	Brian P.
Name2	Reid
Address 1	722 N. Liberty Street
Address 2	
City	Winston Salem
State	NC
Postal Code	27101
Country	US

As a reminder, requester is required to inform the first named inventor or assignee that has properly made itself of record pursuant to 37 CFR 3.71 of the electronically processed petition.

Telephone inquiries concerning this decision should be directed to the Patent Electronic Business Center (EBC) at 866-217-9197.

Office of Petitions

Doc Code: PET.AUTO **Document Description: Petition automatically granted by EFS-Web**	PTO/SB/83 U.S. Patent and Trademark Office Department of Commerce

Electronic Petition Request	**REQUEST FOR WITHDRAWAL AS ATTORNEY OR AGENT AND CHANGE OF CORRESPONDENCE ADDRESS**
Application Number	12617774
Filing Date	13-Nov-2009
First Named Inventor	Brian Reid
Art Unit	1712
Examiner Name	ALEX ROLLAND
Attorney Docket Number	2400.005US2
Title	METHOD OF FORMING A DISPLAY BLANK HAVING AN ENCAPSULATED FRAGRANCE

◉ Please withdraw me as attorney or agent for the above identified patent application and the practitioners of record associated with Customer Number: 21176

The reason(s) for this request are those described in 37 CFR:

10.40(c)(1)(vi)

Certifications

☒ I/We have given reasonable notice to the client, prior to the expiration of the response period, that the practitioner(s) intend to withdraw from employment

☒ I/We have delivered to the client or a duly authorized representative of the client all papers and property (including funds) to which the client is entitled

☒ I/We have notified the client of any responses that may be due and the time frame within which the client must respond

Change the correspondence address and direct all future correspondence to the first named inventor or assignee that has properly made itself of record pursuant to 37 CFR 3.71:

Name	Brian P. Reid
Address	722 N. Liberty Street
City	Winston Salem
State	NC
Postal Code	27101
Country	US

I am authorized to sign on behalf of myself and all withdrawing practitioners.	
Signature	/Jesse B. Ashe, III/
Name	Jesse B. Ashe, III
Registration Number	44513

UNITED STATES PATENT AND TRADEMARK OFFICE

COMMISSIONER FOR PATENTS
UNITED STATES PATENT AND TRADEMARK OFFICE
P.O. BOX 1450
ALEXANDRIA, VA 22313-1450
www.uspto.gov

BACON & THOMAS, PLLC
625 SLATERS LANE
FOURTH FLOOR
ALEXANDRIA VA 22314-1176

MAILED

SEP 08 2010

OFFICE OF PETITIONS

In re Application of
Tweardy, et al.
Application No. 12/617,819
Filed: November 13, 2009
Atty. Dkt. No.: TWER3001/JJC

: DECISION GRANTING STATUS
: UNDER 37 CFR 1.47(a)

This decision is in response to the renewed petition under 37 CFR 1.47(a) filed June 2, 2010.

The petition under 37 CFR 1.47(a) is **GRANTED**.

Petitioners have shown that the non-signing inventor either cannot be reached for presentation of the application papers or has refused to join in the filing of the above-identified application.

The application and papers have been reviewed and found in compliance with 37 CFR 1.47(a). This application is hereby accorded Rule 1.47(a) status.

As provided in 37 CFR 1.47(c), this Office will forward notice of this application's filing to the non-signing inventor at the address given in the petition. Notice of the filing of this application will also be published in the Official Gazette.

This application is being referred to the Office of Patent Application Processing for pre-examination processing.

Telephone inquiries related to this decision may be directed to the undersigned at (571) 272-3205.

/ALESIA M. BROWN/

Alesia M. Brown
Petitions Attorney
Office of Petitions

UNITED STATES PATENT AND TRADEMARK OFFICE

COMMISSIONER FOR PATENTS
UNITED STATES PATENT AND TRADEMARK OFFICE
P.O. BOX 1450
ALEXANDRIA, VA 22313-1450
www.uspto.gov

Lisa Tweardy
1 Turnberry Court
Moorestown, NJ 08057

MAILED
SEP 08 2010
OFFICE OF PETITIONS

In re Application of
Tweardy, et al.
Application No. 12/617,819
Filed: November 13, 2009
Atty. Dkt. No.: TWER3001/JJC

Dear Sir:

You are named as a joint inventor in the above-identified United States patent application, filed under the provisions of 35 U.S.C. 116 (United States Code), and 37 CFR 1.47(a), Rules of Practice in Patent Cases. Should a patent be granted on the application you will be designated therein as a joint inventor.

As a named inventor you are entitled to inspect any paper in the file wrapper of the application, order copies of all or any part thereof (at a prepaid cost per 37 CFR 1.19) or make your position of record in the application. Alternatively, you may arrange to do any of the preceding through a registered patent attorney or agent presenting written authorization from you. If you care to join the application, counsel of record (see below) would presumably assist you. Joining the application would entail the filing of an appropriate oath or declaration by you pursuant to 37 CFR 1.63.

Telephone inquiries regarding this communication should be directed to the undersigned at (571) 272-3205. Requests for information regarding your application should be directed to the File Information Unit at (703) 308-2733. Information regarding how to pay for and order a copy of the application, or a specific paper in the application, should be directed to the Certification Division at (571) 272-3150 or 1 (800) 972-6382 (outside the Washington, DC area).

/ALESIA M. BROWN/

Alesia M. Brown
Petitions Attorney
Office of Petitions

cc: BACON & THOMAS, PLLC
625 SLATERS LANE
FOURTH FLOOR
ALEXANDRIA VA 22314-1176

UNITED STATES PATENT AND TRADEMARK OFFICE

UNITED STATES DEPARTMENT OF COMMERCE
United States Patent and Trademark Office
Address: COMMISSIONER FOR PATENTS
P.O. Box 1450
Alexandria, Virginia 22313-1450
www.uspto.gov

Bib Data Sheet

CONFIRMATION NO. 5371

SERIAL NUMBER	FILING OR 371(c) DATE	CLASS	GROUP ART UNIT	ATTORNEY DOCKET NO.
12/617,819	11/13/2009 RULE 1.47	128	3772	TWER3001/JJC

APPLICANTS

Lisa TWEARDY, Moorestown, NJ;
Jeff Nemeth, Chandler, AZ;

** CONTINUING DATA **********

** FOREIGN APPLICATIONS **********

IF REQUIRED, FOREIGN FILING LICENSE GRANTED
** 11/20/2009

		STATE OR COUNTRY	SHEETS DRAWING	TOTAL CLAIMS	INDEPENDENT CLAIMS
Foreign Priority claimed	☐ yes ☐ no	NJ	8	19	3
35 USC 119 (a-d) conditions met	☐ yes ☐ no ☐ Met after Allowance				
Verified and Acknowledged	Examiner's Signature Initials				

ADDRESS
23364

TITLE

IMMOBILIZATION DEVICE

FILING FEE RECEIVED		
1220	FEES: Authority has been given in Paper No. _____ to charge/credit DEPOSIT ACCOUNT No. _____ for following:	☐ All Fees ☐ 1.16 Fees (Filing) ☐ 1.17 Fees (Processing Ext. of time) ☐ 1.18 Fees (Issue) ☐ Other _____ ☐ Credit

UNITED STATES PATENT AND TRADEMARK OFFICE

UNITED STATES DEPARTMENT OF COMMERCE
United States Patent and Trademark Office
Address: COMMISSIONER FOR PATENTS
P.O. Box 1450
Alexandria, Virginia 22313-1450
www.uspto.gov

APPLICATION NO.	FILING DATE	FIRST NAMED INVENTOR	ATTORNEY DOCKET NO.	CONFIRMATION NO.
12/617,964	11/13/2009	Hideharu Nagatomo	MNL-2018-2424	5665

7590 06/14/2011

NIXON & VANDERHYE, PC
901 NORTH GLEBE ROAD, 11TH FLOOR
ARLINGTON, VA 22203

EXAMINER	
PATEL, SHARDUL	
ART UNIT	PAPER NUMBER
3661	
MAIL DATE	DELIVERY MODE
06/14/2011	PAPER

DECISION GRANTING PETITION UNDER 37 CFR 1.138(d)

The declaration of express abandonment is recognized

This is in response to the petition under 37 CFR 1.138(d), requesting for a refund of any previously paid search fee and excess claims fee in the above-identified application.

The petition is granted.

The express abandonment is recognized. Any previously paid search fee and excess claims fee are hereby refunded.

Telephone inquiries should be directed to the Office of Data Management at (571) 272-4200.

Nicole Farmer

Patent Publication Branch
Office of Data Management

Doc Code: PPH.PCT.652
Document Description: Petition to make special under PCT-Patent Pros Hwy

PTO/SB/20PCT-US (09-10)
Approved for use through 01/31/2012. OMB 0651-0058
U.S. Patent and Trademark Office; U. S. DEPARTMENT OF COMMERCE
Under the Paperwork Reduction Act of 1995, no persons are required to respond to a collection of information unless it displays a valid OMB control number.

REQUEST FOR PARTICIPATION IN THE PATENT COOPERATION TREATY - PATENT PROSECUTION HIGHWAY (PCT-PPH) PILOT PROGRAM IN A U.S. APPLICATION WHERE THE USPTO WAS THE ISA OR IPEA

Application No:	12/618,012	Filing date:	November 13, 2009
First Named Inventor:	William Dannevik		
Title of the Invention:	APPARATUS AND METHOD FOR PROVIDING ENVIRONMENTAL PREDICTIVE INDICATORS TO EMERGENCY RESPONSE MANAGERS		

THIS REQUEST FOR PARTICIPATION IN THE PCT-PPH PILOT PROGRAM ALONG WITH THE REQUIRED DOCUMENTS MUST BE SUBMITTED VIA EFS-WEB. INFORMATION REGARDING EFS-WEB IS AVAILABLE AT HTTP://WWW.USPTO.GOV/EBC/EFS_HELP.HTML

APPLICANT HEREBY REQUESTS PARTICIPATION IN THE PCT-PPH PROGRAM AND PETITIONS TO MAKE THE ABOVE-IDENTIFIED APPLICATION SPECIAL UNDER THE PCT-PPH PROGRAM.

The above-identified application is (1) a national stage entry of the corresponding PCT application, or (2) a national stage entry of another PCT application which claims priority to the corresponding PCT application, or (3) a national application that claims domestic/ foreign priority to the corresponding PCT application, or (4) a national application which forms the basis for the priority claim in the corresponding PCT application, or (5) a continuing application of a U.S. application that satisfies one of (1) to (4) above, or (6) a U.S. application that claims domestic benefit to a U.S. provisional application which forms the basis for the priority claim in the corresponding PCT application.

PCT/US09/64373

The corresponding PCT application number(s) is/are:

The international date of the corresponding PCT application(s) is/are:

November 13, 2009

I. List of Required Documents:

a. **A copy of the latest international work product (WO/ISA, WO/IPEA, or IPER) in the above–identified corresponding PCT application(s)**

☒ Is attached

☐ Is not attached because the document is already in the U.S. application.

b. **A copy of all claims which were indicated as having novelty, inventive step and industrial applicability in the above-identified corresponding PCT application(s).**

☒ Is attached.

☐ Is not attached because the document is already in the U.S. application.

c. **English translations of the documents in a. and b. above are attached (if the documents are not in the English language). A statement that the English translation is accurate is attached for the document in b. above.**

This collection of information is required by 35 U.S.C. 119, 37 CFR 1.55, and 37 CFR 1.102(d). The information is required to obtain or retain a benefit by the public, which is to file (and by the USPTO to process) an application. Confidentiality is governed by 35 U.S.C. 122 and 37 CFR 1.11 and 1.14. This collection is estimated to take 2 hours to complete, including gathering, preparing, and submitting the completed application form to the USPTO. Time will vary depending upon the individual case. Any comments on the amount of time you require to complete this form and/or suggestions for reducing this burden should be sent to the Chief Information Officer, U.S. Patent and Trademark Office, U.S. Department of Commerce, P.O. Box 1450, Alexandria, VA 22313-1450. DO NOT SEND FEES OR COMPLETED FORMS TO THIS ADDRESS.

PTO/SB/20PCT-US (09-10)
Approved for use through 01/31/2012. OMB 0651-0058
U.S.Patent and Trademark Office; U.S. DEPARTMENT OF COMMERCE
Under the Paperwork Reduction Act of 1995, no persons are required to respond to a collection of information unless it displays a valid OMB control number.

REQUEST FOR PARTICIPATION IN THE PCT-PPH PILOT PROGRAM IN A U.S. APPLICATION WHERE THE USPTO WAS THE ISA OR IPEA (continued)

Application No.:	12/618,012
First Named Inventor:	William Dannevik

d. **(1) An information disclosure statement listing the documents cited in the international work products (ISR, WO/ISA, WO/IPEA, IPER) of the corresponding PCT application.**

☐ Is attached

☒ Has already been filed in the above-identified U.S. application on February 26, 2010

(2) Copies of all documents (except) for U.S. patents or U.S. patent application publications)

☐ Are attached.

☒ Have already been filed in the above-identified U.S. application on February 26, 2010

II. Claims Correspondence Table:

Claims in US Application	Patentable Claims in the corresponding PCT Application	Explanation regarding the correspondence
1 - 21	1 - 21	The pending claims in the US application 12/618,012 are identical to the claims filed in PCT/US09/64373

III. All the claims in the US application sufficiently correspond to the patentable claims in the corresponding PCT application.

Signature /Mark E. Stallion/	Date 11/14/2011
Name (Print/Typed) Mark E. Stallion	Registration Number 46132

Privacy Act Statement

The **Privacy Act of 1974 (P.L. 93-579)** requires that you be given certain information in connection with your submission of the attached form related to a patent application or patent. Accordingly, pursuant to the requirements of the Act, please be advised that: (1) the general authority for the collection of this information is 35 U.S.C. 2(b)(2); (2) furnishing of the information solicited is voluntary; and (3) the principal purpose for which the information is used by the U.S. Patent and Trademark Office is to process and/or examine your submission related to a patent application or patent. If you do not furnish the requested information, the U.S. Patent and Trademark Office may not be able to process and/or examine your submission, which may result in termination of proceedings or abandonment of the application or expiration of the patent.

The information provided by you in this form will be subject to the following routine uses:

1. The information on this form will be treated confidentially to the extent allowed under the Freedom of Information Act (5 U.S.C. 552) and the Privacy Act (5 U.S.C 552a). Records from this system of records may be disclosed to the Department of Justice to determine whether disclosure of these records is required by the Freedom of Information Act.
2. A record from this system of records may be disclosed, as a routine use, in the course of presenting evidence to a court, magistrate, or administrative tribunal, including disclosures to opposing counsel in the course of settlement negotiations.
3. A record in this system of records may be disclosed, as a routine use, to a Member of Congress submitting a request involving an individual, to whom the record pertains, when the individual has requested assistance from the Member with respect to the subject matter of the record.
4. A record in this system of records may be disclosed, as a routine use, to a contractor of the Agency having need for the information in order to perform a contract. Recipients of information shall be required to comply with the requirements of the Privacy Act of 1974, as amended, pursuant to 5 U.S.C. 552a(m).
5. A record related to an International Application filed under the Patent Cooperation Treaty in this system of records may be disclosed, as a routine use, to the International Bureau of the World Intellectual Property Organization, pursuant to the Patent Cooperation Treaty.
6. A record in this system of records may be disclosed, as a routine use, to another federal agency for purposes of National Security review (35 U.S.C. 181) and for review pursuant to the Atomic Energy Act (42 U.S.C. 218(c)).
7. A record from this system of records may be disclosed, as a routine use, to the Administrator, General Services, or his/her designee, during an inspection of records conducted by GSA as part of that agency's responsibility to recommend improvements in records management practices and programs, under authority of 44 U.S.C. 2904 and 2906. Such disclosure shall be made in accordance with the GSA regulations governing inspection of records for this purpose, and any other relevant (*i.e.*, GSA or Commerce) directive. Such disclosure shall not be used to make determinations about individuals.
8. A record from this system of records may be disclosed, as a routine use, to the public after either publication of the application pursuant to 35 U.S.C. 122(b) or issuance of a patent pursuant to 35 U.S.C. 151. Further, a record may be disclosed, subject to the limitations of 37 CFR 1.14, as a routine use, to the public if the record was filed in an application which became abandoned or in which the proceedings were terminated and which application is referenced by either a published application, an application open to public inspection or an issued patent.
9. A record from this system of records may be disclosed, as a routine use, to a Federal, State, or local law enforcement agency, if the USPTO becomes aware of a violation or potential violation of law or regulation.

UNITED STATES PATENT AND TRADEMARK OFFICE

Commissioner for Patents
United States Patent and Trademark Office
P.O. Box 1450
Alexandria, VA 22313-1450
www.uspto.gov

HUSCH BLACKWELL LLP
190 CARONDELET PLAZA
SUITE 600
ST. LOUIS MO 63105

MAILED

JAN 24 2012

OFFICE OF PETITIONS

In re Application of:
Dannevik et al.
Application No. 12/618,012
Filed: November 13, 2009
Attorney Docket No. 60216.33

: DECISION ON REQUEST TO
: PARTICIPATE IN THE PATENT
: PROSECUTION HIGHWAY
: PROGRAM AND PETITION
: TO MAKE SPECIAL UNDER
: 37 CFR 1.102(a)

This is a decision on the request to participate in the PCT Patent Prosecution Highway (PCT-PPH) pilot program and the petition under 37 CFR 1.102(a), filed on November 14, 2011 to make the above-identified application special.

The request and petition are **GRANTED**.

Discussion

A grantable request to participate in the PCT-PPH pilot program and petition to make special require:

(1) The U.S. application must have an eligible relationship to one or more PCT applications where the ISA or IPEA are the JPO, EPO, KIPO, NPI, NBPR, or USPTO;

(2) At least one claim in the PCT application has novelty, inventive step, and industrial applicability and must be free of any observations in Box VIII in the latest work product in the international stage or applicant must identify and explain why the claim(s) is/are not subject to the observation in Box VIII;

(3) Applicant must submit a copy of the claim(s) from the PCT application(s) that have novelty, inventive step, and industrial applicability along with an English translation thereof and a statement that the English translation is accurate, if the claims are not in the English language;

(4) All the claims in the U.S. application must sufficiently correspond or be amended to sufficiently correspond to the claim(s) that have novelty, inventive step, and industrial applicability in the PCT application(s);

(5) Examination of the U.S. application has not begun;

(6) Applicant must submit a copy of the latest international work product from the PCT application indicating that the claim(s) have novelty, inventive step, and industrial applicability along with an English translation thereof and a statement that the English translation is accurate if the latest international work product is not in the English language;

(7) Applicant must submit an IDS listing the documents cited by the PCT examiner in the international work product along with copies of documents except U.S. patents or U.S. patent application publications.

The request to participate in the PCT-PPH pilot program and petition comply with the above requirements. Accordingly, the above-identified application has been accorded "special" status.

Telephone inquiries concerning this decision should be directed to Joan Olszewski at 571-272-7751.

All other inquiries concerning the examination or status of the application is accessible in the PAIR system at http://www.uspto.gov/ebc.index.html.

This application will be forwarded to the examiner for action on the merits commensurate with this decision once this application's formality reviews have been completed.

/dab/
David Bucci
Petitions Examiner
Office of Petitions

UNITED STATES PATENT AND TRADEMARK OFFICE

Commissioner for Patents
United States Patent and Trademark Office
P.O. Box 1450
Alexandria, VA 22313-1450
www.uspto.gov

ZIMMER TECHNOLOGY
- BAKER & DANIELS
111 EAST WAYNE STREET, SUITE 800
FORT WAYNE IN 46802

MAILED

SEP 21 2010

OFFICE OF PETITIONS

In re Application of
Meyers, et al.
Application No. 12/618,028
Filed: 13 November, 2009
Attorney Docket No. ZIM0509-02

DECISION ON PETITION

This is a decision on the petition filed on 20 September, 2010, pursuant to 37 C.F.R. §1.47

The petition as considered under 37 C.F.R. §1.47(a) is **DISMISSED**.

A grantable petition under 37 C.F.R. §1.47(a) requires: (1) petition and fee; (2) proof that the non-signing inventor cannot be reached or refuses to sign the oath or declaration after having been presented with the application papers (specification: description, claims and drawings); (3) an acceptable oath or declaration in compliance with 35 U.S.C. §115 and §116; and (4) a statement of the last known address of the non-signing inventor(s)—with diligence in the effort to ascertain the validity of the address set forth as the reasonably believed to be last known/current/valid address.

BACKGROUND

The record reflects as follows:

The application was deposited on 13 November, 2009, without, *inter alia*, a fully executed oath/declaration

The Office mailed a Notice of Missing Parts requiring, *inter alia*, a fully executed oath/declaration on 1 December, 2009.

On 29 June, 2010, Petitioner Jamie M. Drewry (Reg. No. 61,320) submitted, *inter alia*: a request and fee for extension of time, a petition with fee with statement by himself and Jason A. Houser (Reg. No. 53,038); and with: an oath/declaration executed by co-inventors Meyers, Montgomery,

Branscome, Aquilo, Panchinson, Timmons, Les, Choong, Darrigan, Peek, Vaughn, Conrad, Andersen, Cook, Walker, Letson, O'Connor and Bos for themselves and on behalf of non-signing inventor Jay S. Wunder MD (Dr. Wunder). Petitioner also submitted a statement as to an address for the non-signing inventor (or, where appropriate, legal representative), but not only does the record fail to provide confirmation of an ability to deliver to an address a copy of the complete application (description, claims, abstract and drawings) to the non-signing inventor (or, where appropriate, legal representative), there is absolutely no showing at all that Petitioner even sought to undertake that responsibility under the Rule in this regard. Thus there also was no indication of the validity/currency/reasonableness of believing it to be last known address for the non-signing inventor and so to present it properly to the Office pursuant to Petitioner's duty of candor to and diligent inquiry before the Office. The petition was dismissed on 20 July, 2010.

On 20 September, 2010, Petitioner filed a petition and averred that consistent with the guidance in the Commentary at MPEP §409.03, and §409.03(a) et seq., that the non-signing inventor executed the oath/declaration and so joined in the application, and in support of the averment, Petitioner submitted a copy of the executed oath/declaration in compliance with 37 C.F.R. §1.63—and so evidencing joinder.

The availability of applications and application papers online to applicants/practitioners who diligently associate their Customer Number with the respective application(s) now provides an applicant/practitioner on-demand information as to events/transactions in an application. Thus, now if one wishes to know the progress in and/or status of an application or the accuracy of the data therein, one need only look at the file online.

Out of an abundance of caution, Petitioners always are reminded that those registered to practice *and* all others who make representations before the Office must inquire into the underlying facts of representations made to the Office and support averments with the appropriate documentation–since all owe to the Office the continuing duty to disclose.[1]

CONCLUSION

The instant petition under 37 C.F.R. §1.47 is **dismissed as moot for joinder**.

In view of the joinder of the inventor, further consideration under 37 C.F.R. §1.47 is not necessary. This application does not have any Rule 1.47 status and no such status should appear

[1] See supplement of 17 June, 1999. The Patent and Trademark Office is relying on petitioner's duty of candor and good faith and accepting a statement made by Petitioner. See Changes to Patent Practice and Procedure, 62 Fed. Reg. at 53160 and 53178, 1203 Off. Gaz. Pat. Office at 88 and 103 (responses to comments 64 and 109)(applicant obligated under 37 C.F.R. §10.18 to inquire into the underlying facts and circumstances when providing statements to the Patent and Trademark Office). See specifically, the regulations at 37 C.F.R. §10.18.

on the record for this file. This application should not be returned to this Office for any further consideration under 37 C.F.R. §1.47.

The instant application is released to the Office of Patent Application Processing (OPAP) for further processing in due course.

While telephone inquiries regarding this decision may be directed to the undersigned at (571) 272-3214—it is noted, however, that all practice before the Office is in writing (see: 37 C.F.R. §1.2[2]) and the proper authority for action on any matter in this regard are the statutes (35 U.S.C.), regulations (37 C.F.R.) and the commentary on policy (MPEP). Therefore, no telephone discussion may be controlling or considered authority for Petitioner's action(s).

/John J. Gillon, Jr./
John J. Gillon, Jr.
Senior Attorney
Office of Petitions

[2] The regulations at 37 C.F.R. §1.2 provide:

§1.2 Business to be transacted in writing.

All business with the Patent and Trademark Office should be transacted in writing. The personal attendance of applicants or their attorneys or agents at the Patent and Trademark Office is unnecessary. The action of the Patent and Trademark Office will be based exclusively on the written record in the Office. No attention will be paid to any alleged oral promise, stipulation, or understanding in relation to which there is disagreement or doubt.

UNITED STATES PATENT AND TRADEMARK OFFICE

Commissioner for Patents
United States Patent and Trademark Office
P.O. Box 1450
Alexandria, VA 22313-1450
www.uspto.gov

E I DU PONT DE NEMOURS AND COMPANY
LEGAL PATENT RECORDS CENTER
BARLEY MILL PLAZA 25/1122B
4417 LANCASTER PIKE
WILMINGTON, DE 19805

MAILED

NOV 03 2010

OFFICE OF PETITIONS

In re Application of :
Stephen J. Bennison, et al. :
Application No. 12/618,036 : DECISION GRANTING PETITION
Filed: November 13, 2009 : UNDER 37 CFR 1.313(c)(2)
Attorney Docket No. AD7455USCNT :

This is a decision on the petition under 37 CFR 1.313(c)(2), filed November 2, 2010, to withdraw the above-identified application from issue after payment of the issue fee.

The petition is **GRANTED**.

The above-identified application is withdrawn from issue for consideration of a submission under 37 CFR 1.114 (request for continued examination). *See* 37 CFR 1.313(c)(2).

Petitioner is advised that the issue fee paid on October 18, 2010 cannot be refunded. If, however, this application is again allowed, petitioner may request that it be applied towards the issue fee required by the new Notice of Allowance.[1]

Telephone inquiries regarding this decision should be directed to undersigned at (571) 272-1642. All other inquiries concerning the examination or status of this application should be directed to the Technology Center.

This application is being referred to Technology Center AU 1787 for processing of the request for continued examination under 37 CFR 1.114 and for consideration of the concurrently filed information disclosure statement.

/AMW/
April M, Wise
Petitions Examiner
Office of Petitions

[1] *The request to apply the issue fee to the new Notice may be satisfied by completing and returning the new Part B – Fee(s) Transmittal Form (along with any balance due at the time of submission). Petitioner is advised that the Issue Fee Transmittal Form must be completed and timely submitted to avoid abandonment of the application.*

UNITED STATES PATENT AND TRADEMARK OFFICE

UNITED STATES DEPARTMENT OF COMMERCE
United States Patent and Trademark Office
Address: COMMISSIONER FOR PATENTS
P.O. Box 1450
Alexandria, Virginia 22313-1450
www.uspto.gov

APPLICATION NO.	FILING DATE	FIRST NAMED INVENTOR	ATTORNEY DOCKET NO.	CONFIRMATION NO.
12/618,068	11/13/2009	Ryo Sano	MNL-2018-2419	5879

23117 7590 10/02/2011

NIXON & VANDERHYE, PC
901 NORTH GLEBE ROAD, 11TH FLOOR
ARLINGTON, VA 22203

EXAMINER	
HOANG, JOHNNY H	

ART UNIT	PAPER NUMBER
3747	

MAIL DATE	DELIVERY MODE
10/02/2011	PAPER

Please find below and/or attached an Office communication concerning this application or proceeding.

The time period for reply, if any, is set in the attached communication.

UNITED STATES PATENT AND TRADEMARK OFFICE

Commissioner for Patents
United States Patent and Trademark Office
P.O. Box 1450
Alexandria, VA 22313-1450
www.uspto.gov

NIXON & VANDERHYE, PC
901 NORTH GLEBE ROAD, 11TH FLOOR
ARLINGTON VA 22203

In re Application of	:	
SANO, RYO	:	DECISION ON REQUEST TO
Application No. 12/618,068	:	PARTICIPATE IN PATENT
Filed: November 13, 2009	:	PCT/PROSECUTION HIGHWAY
Attorney Docket No. MNL-2018-2419	:	PROGRAM AND PETITION
For: INTAKE SYSTEM FOR INTERNAL COMBUSTION ENGINE	:	TO MAKE SPECIAL UNDER 37 CFR 1.102(a)

This is a decision on the request to participate in the Patent Prosecution Highway (PPH) program and the petition under 37 CFR 1.102(a), filed September 30, 2011 to make the above-identified application special.

The request and petition are granted.

A grantable request to participate in the PPH pilot program and petition to make special require:

(1) The U.S. application must validly claim priority under 35 U.S.C. 119(a) to one or more applications filed in the JPO;
(2) Applicant must submit a copy of the allowable/patentable claim(s) from the JPO/PCT application(s) along with an English translation thereof and a statement that the English translation is accurate;
(3) All the claims in the U.S. application must sufficiently correspond or be amended to sufficiently correspond to the allowable/patentable claim(s) in the JPO application(s);
(4) Examination of the U.S. application has not begun;
(5) Applicant must submit a copy of all the office actions from each of the JPO/PCT application(s) containing the allowable/patentable claim(s) along with an English translation thereof and a statement that the English translation is accurate; and
(6) Applicant must submit an IDS listing the documents cited by the JPO examiner in the JPO office action along with copies of documents except U.S. patents or U.S. patent application publications.
In light of the petition being properly submitted, the request to participate in the PPH program and the petition comply with the above-requirements. Accordingly, the above-identified application has been accorded "special" status.

The applicant is encouraged to cite and submit all relevant prior art references, if any, to facilitate examination in this application. Upon completion of pre-examination processing, this application will be forwarded to an examiner for examination.

Telephone inquiries concerning this decision should be directed to Henry C. Yuen at 571-272-4485. All other inquiries concerning the examination or status of the application should be directed to Steven Cronin, SPE of Art Unit 3747, and 571-272-4536 for Class 123 and also accessible in the PAIR system at http://www.uspto.gov/ebc.index.html.

Petition is **granted**.

/Henry C. Yuen/

_____

Henry C. Yuen, Special Programs Examiner
Technology Center 3700 – Mechanical Engineering,
Manufacturing and Products
571-272-4856

UNITED STATES PATENT AND TRADEMARK OFFICE

Commissioner for Patents
United States Patent and Trademark Office
P.O. Box 1450
Alexandria, VA 22313-1450
www.uspto.gov

LESAVICH HIGH-TECH LAW GROUP, P.C.
SUITE 325
39 S. LASALLE STREET
CHICAGO IL 60603

MAILED

JUN 08 2011

OFFICE OF PETITIONS

In re Application of	:	
ROSENTHAL, et al	:	
Application No. 12/618,100	:	DECISION ON PETITION
Filed: November 13, 2009	:	TO WITHDRAW
Attorney Docket No. 04,19-C	:	FROM RECORD
	:	

This is a decision on the Request to Withdraw as attorney or agent of record under 37 C.F.R. § 1.36(b), filed May 5, 2011.

The request is **NOT APPROVED.**

The request to withdraw from record cannot be approved because the change of correspondence address is not that of an assignee who has properly intervened. The Office will either change the correspondence address of record to the most current address information provided for an assignee of the entire interest who properly became of record under 37 CFR 3.71 or, if no assignee of the entire interest has properly been made of record under 37 CFR 3.71, the most current address information provided for the first named inventor. 37 CFR 3.71(c) states:

> *"An assignee becomes of record either in a national patent application or a reexamination proceeding by filing a statement incompliance with § 3.73(b) that is signed by a party who is authorized to act on behalf of the assignee."*

All future communications from the Office will continue to be directed to the above-identified address until otherwise properly notified.

Telephone inquiries concerning this decision should be directed to the undersigned at (571) 272- 6735.

/Diane C. Goodwyn/
Diane C. Goodwyn
Petitions Examiner
Office of Petitions

cc: ROSENTHAL COLLINS GROUP, LLC
216 W. JACKSON, SUITE 400
CHICAGO, IL 60606

Doc Code: PPH.PCT.652
Document Description: Petition to make special under PCT-Patent Pros Hwy

PTO/SB/20PCT-KR (06-10)
Approved for use through 01/31/2012. OMB 0651-0058
U.S. Patent and Trademark Office; U. S. DEPARTMENT OF COMMERCE
Under the Paperwork Reduction Act of 1995, no persons are required to respond to a collection of information unless it displays a valid OMB control number.

REQUEST FOR PARTICIPATION IN THE PATENT COOPERATION TREATY - PATENT PROSECUTION HIGHWAY (PCT-PPH) PILOT PROGRAM BETWEEN THE KOREAN INTELLECTUAL PROPERTY OFFICE (KIPO) AND THE USPTO

Application No:	12/618,104	Filing date:	13-NOV-2009
First Named Inventor:	William Dunn		
Title of the Invention:	FIELD SERVICEABLE ELECTRONIC DISPLAY		

THIS REQUEST FOR PARTICIPATION IN THE PCT-PPH PILOT PROGRAM ALONG WITH THE REQUIRED DOCUMENTS MUST BE SUBMITTED VIA EFS-WEB. INFORMATION REGARDING EFS-WEB IS AVAILABLE AT HTTP://WWW.USPTO.GOV/EBC/EFS_HELP.HTML

APPLICANT HEREBY REQUESTS PARTICIPATION IN THE PCT-PPH PROGRAM AND PETITIONS TO MAKE THE ABOVE-IDENTIFIED APPLICATION SPECIAL UNDER THE PCT-PPH PROGRAM.

The above-identified application is (1) a national stage entry of the corresponding PCT application, or (2) a national stage entry of another PCT application which claims priority to the corresponding PCT application, or (3) a national application that claims domestic/ foreign priority to the corresponding PCT application, or (4) a national application which forms the basis for the priority claim in the corresponding PCT application, or (5) a continuing application of a U.S. application that satisfies one of (1) to (4) above, or (6) a U.S. application that claims domestic benefit to a U.S. provisional application which forms the basis for the priority claim in the corresponding PCT application.

The corresponding PCT application number(s) is/are: PCT/US10/54616

The international filing date of the corresponding PCT application(s) is/are: 29-OCT-2010

I. List of Required Documents:

a. **A copy of the latest international work product (WO/ISA, WO/IPEA, or IPER) in the above–identified corresponding PCT application(s)**

☑ Is attached.

☐ Is not attached because the document is already in the U.S. application.

b. **A copy of all claims which were indicated as having novelty, inventive step and industrial applicability in the above-identified corresponding PCT application(s).**

☑ Is attached.

☐ Is not attached because the document is already in the U.S. application.

c. **English translations of the documents in a. and b. above are attached (if the documents are not in the English language). A statement that the English translation is accurate is attached for the document in b. above.**

This collection of information is required by 35 U.S.C. 119, 37 CFR 1.55, and 37 CFR 1.102(d). The information is required to obtain or retain a benefit by the public, which is to file (and by the USPTO to process) an application. Confidentiality is governed by 35 U.S.C. 122 and 37 CFR 1.11 and 1.14. This collection is estimated to take 2 hours to complete, including gathering, preparing, and submitting the completed application form to the USPTO. Time will vary depending upon the individual case. Any comments on the amount of time you require to complete this form and/or suggestions for reducing this burden should be sent to the Chief Information Officer, U.S. Patent and Trademark Office, U.S. Department of Commerce, P.O. Box 1450, Alexandria, VA 22313-1450. DO NOT SEND FEES OR COMPLETED FORMS TO THIS ADDRESS.

PTO/SB/20PCT-KR (06-10)
Approved for use through 01/31/2012. OMB 0651-0058
U.S.Patent and Trademark Office; U.S. DEPARTMENT OF COMMERCE
Under the Paperwork Reduction Act of 1995, no persons are required to respond to a collection of information unless it displays a valid OMB control number.

REQUEST FOR PARTICIPATION IN THE PCT-PPH PILOT PROGRAM BETWEEN THE KIPO AND THE USPTO

(continued)

Application No.:	12/618,104
First Named Inventor:	William Dunn

d. **(1) An information disclosure statement listing the documents cited in the international work products (ISR, WO/ISA, WO/IPEA, IPER) of the corresponding PCT application.**

☐ Is attached

☑ Has already been filed in the above-identified U.S. application on 2 Sept 2011

(2) Copies of all documents (except) for U.S. patents or U.S. patent application publications)

☐ Are attached.

☑ Have already been filed in the above-identified U.S. application on 2 Sept 2011

II. Claims Correspondence Table:

Claims in US Application	Patentable Claims in the corresponding PCT Application	Explanation regarding the correspondence
1-20	1-20	Identical

III. All the claims in the US application sufficiently correspond to the patentable claims in the corresponding PCT application.

Signature /Tyler S. Dunham, Reg. No. 60,364/	Date 7 Sept 2011
Name (Print/Typed) Tyler S. Dunham	Registration Number 60,364

Privacy Act Statement

The **Privacy Act of 1974 (P.L. 93-579)** requires that you be given certain information in connection with your submission of the attached form related to a patent application or patent. Accordingly, pursuant to the requirements of the Act, please be advised that: (1) the general authority for the collection of this information is 35 U.S.C. 2(b)(2); (2) furnishing of the information solicited is voluntary; and (3) the principal purpose for which the information is used by the U.S. Patent and Trademark Office is to process and/or examine your submission related to a patent application or patent. If you do not furnish the requested information, the U.S. Patent and Trademark Office may not be able to process and/or examine your submission, which may result in termination of proceedings or abandonment of the application or expiration of the patent.

The information provided by you in this form will be subject to the following routine uses:

1. The information on this form will be treated confidentially to the extent allowed under the Freedom of Information Act (5 U.S.C. 552) and the Privacy Act (5 U.S.C 552a). Records from this system of records may be disclosed to the Department of Justice to determine whether disclosure of these records is required by the Freedom of Information Act.
2. A record from this system of records may be disclosed, as a routine use, in the course of presenting evidence to a court, magistrate, or administrative tribunal, including disclosures to opposing counsel in the course of settlement negotiations.
3. A record in this system of records may be disclosed, as a routine use, to a Member of Congress submitting a request involving an individual, to whom the record pertains, when the individual has requested assistance from the Member with respect to the subject matter of the record.
4. A record in this system of records may be disclosed, as a routine use, to a contractor of the Agency having need for the information in order to perform a contract. Recipients of information shall be required to comply with the requirements of the Privacy Act of 1974, as amended, pursuant to 5 U.S.C. 552a(m).
5. A record related to an International Application filed under the Patent Cooperation Treaty in this system of records may be disclosed, as a routine use, to the International Bureau of the World Intellectual Property Organization, pursuant to the Patent Cooperation Treaty.
6. A record in this system of records may be disclosed, as a routine use, to another federal agency for purposes of National Security review (35 U.S.C. 181) and for review pursuant to the Atomic Energy Act (42 U.S.C. 218(c)).
7. A record from this system of records may be disclosed, as a routine use, to the Administrator, General Services, or his/her designee, during an inspection of records conducted by GSA as part of that agency's responsibility to recommend improvements in records management practices and programs, under authority of 44 U.S.C. 2904 and 2906. Such disclosure shall be made in accordance with the GSA regulations governing inspection of records for this purpose, and any other relevant (*i.e.*, GSA or Commerce) directive. Such disclosure shall not be used to make determinations about individuals.
8. A record from this system of records may be disclosed, as a routine use, to the public after either publication of the application pursuant to 35 U.S.C. 122(b) or issuance of a patent pursuant to 35 U.S.C. 151. Further, a record may be disclosed, subject to the limitations of 37 CFR 1.14, as a routine use, to the public if the record was filed in an application which became abandoned or in which the proceedings were terminated and which application is referenced by either a published application, an application open to public inspection or an issued patent.
9. A record from this system of records may be disclosed, as a routine use, to a Federal, State, or local law enforcement agency, if the USPTO becomes aware of a violation or potential violation of law or regulation.

UNITED STATES PATENT AND TRADEMARK OFFICE

UNITED STATES DEPARTMENT OF COMMERCE
United States Patent and Trademark Office
Address: COMMISSIONER FOR PATENTS
P.O. Box 1450
Alexandria, Virginia 22313-1450
www.uspto.gov

APPLICATION NO.	FILING DATE	FIRST NAMED INVENTOR	ATTORNEY DOCKET NO.	CONFIRMATION NO.
12/618,104	11/13/2009	William DUNN	MAN2241-069	5946

8698 7590 11/16/2011

STANDLEY LAW GROUP LLP
6300 Riverside Drive
Dublin, OH 43017

EXAMINER	
EDWARDS, ANTHONY Q	
ART UNIT	PAPER NUMBER
2835	

MAIL DATE	DELIVERY MODE
11/16/2011	PAPER

Please find below and/or attached an Office communication concerning this application or proceeding.

The time period for reply, if any, is set in the attached communication.

UNITED STATES PATENT AND TRADEMARK OFFICE

Commissioner for Patents
United States Patent and Trademark Office
P.O. Box 1450
Alexandria, VA 22313-1450
www.uspto.gov

STANDLEY LAW GROUP LLP
6300 Riverside Drive
Dublin OH 43017

NOV 16 2011

In re Application of
DUNN et al.
Application No.: 12/618,104
Filed: November 13, 2009
Attorney Docket No.: MAN2241-069

: DECISION ON REQUEST TO
: PARTICIPATE IN THE PATENT
: PROSECUTION HIGHWAY
: PROGRAM AND PETITION
: TO MAKE SPECIAL UNDER
: 37 CFR 1.102(a)

This is a decision on the request to participate in the PCT Patent Prosecution Highway (PCT-PPH) pilot program and the petition under 37 CFR 1.102(a), filed on September 7, 2011, to make the above-identified application special.

The request and petition are **GRANTED**.

Discussion

A grantable request to participate in the PCT-PPH pilot program and petition to make special require:

(1) The U.S. application must have an eligible relationship to one or more PCT applications where the ISA or IPEA are the JPO, EPO, KIPO, NPI, or USPTO;

(2) At least one claim in the PCT application has novelty, inventive step, and industrial applicability and must be free of any observations in Box VIII in the latest work product in the international stage or applicant must identify and explain why the claim(s) is/are not subject to the observation in Box VIII;

(3) Applicant must submit a copy of the claim(s) from the PCT application(s) that have novelty, inventive step, and industrial applicability along with an English translation thereof and a statement that the English translation is accurate, if the claims are not in the English language;

(4) All the claims in the U.S. application must sufficiently correspond or be amended to sufficiently correspond to the claim(s) that have novelty, inventive step, and industrial applicability in the PCT application(s);

(5) Examination of the U.S. application has not begun;

(6) Applicant must submit a copy of the latest international work product from the PCT application indicating that the claim(s) have novelty, inventive step, and industrial applicability along with an English translation thereof and a statement that the English translation is accurate if the latest international work product is not in the English language;

(7) Applicant must submit an IDS listing the documents cited by the PCT examiner in the international work product along with copies of documents except U.S. patents or U.S. patent application publications.

The request to participate in the PCT-PPH pilot program and petition comply with the above requirements. Accordingly, the above-identified application has been accorded "special" status.

Telephone inquiries concerning this decision should be directed to Colleen Dunn at 571-272-1170.

All other inquiries concerning the examination or status of the application is accessible in the PAIR system at http://www.uspto.gov/ebc.index.html.

This application will be forwarded to the examiner for action on the merits commensurate with this decision once this application's formality reviews have been completed.

/Colleen Dunn/

Colleen Dunn
TQAS, TC 2800

Doc Code: PPH.PCT.652
Document Description: Petition to make special under PCT-Patent Pros Hwy

PTO/SB/20PCT-EP (05-10)
Approved for use through 01/31/2012. OMB 0651-0058
U.S. Patent and Trademark Office; U. S. DEPARTMENT OF COMMERCE
Under the Paperwork Reduction Act of 1995, no persons are required to respond to a collection of information unless it displays a valid OMB control number.

REQUEST FOR PARTICIPATION IN THE PATENT COOPERATION TREATY - PATENT PROSECUTION HIGHWAY (PCT-PPH) PILOT PROGRAM BETWEEN THE EUROPEAN PATENT OFFICE (EPO) AND THE USPTO

Application No:	12/618,107	Filing date:	November 13, 2009
First Named Inventor:	Boris Tsirline		
Title of the Invention:	ENCODING MODULE, ASSOCIATED ENCODING ELEMENT, CONNECTOR, PRINTER-ENCODER AND ACCESS CONTROL SYSTEM		

THIS REQUEST FOR PARTICIPATION IN THE PCT-PPH PILOT PROGRAM ALONG WITH THE REQUIRED DOCUMENTS MUST BE SUBMITTED VIA EFS-WEB. INFORMATION REGARDING EFS-WEB IS AVAILABLE AT HTTP://WWW.USPTO.GOV/EBC/EFS_HELP.HTML

APPLICANT HEREBY REQUESTS PARTICIPATION IN THE PCT-PPH PROGRAM AND PETITIONS TO MAKE THE ABOVE-IDENTIFIED APPLICATION SPECIAL UNDER THE PCT-PPH PROGRAM.

The above-identified application is (1) a national stage entry of the corresponding PCT application, or (2) a national stage entry of another PCT application which claims priority to the corresponding PCT application, or (3) a national application that claims domestic/ foreign priority to the corresponding PCT application, or (4) a national application which forms the basis for the priority claim in the corresponding PCT application, or (5) a continuing application of a U.S. application that satisfies one of (1) to (4) above, or (6) a U.S. application that claims domestic benefit to a U.S. provisional application which forms the basis for the priority claim in the corresponding PCT application.

The corresponding PCT application number(s) is/are: PCT/US2010/056590

The international filing date of the corresponding PCT application(s) is/are: November 12, 2010

I. List of Required Documents:

a. **A copy of the latest international work product (WO/ISA, WO/IPEA, or IPER) in the above–identified corresponding PCT application(s)**

☐ Is attached

☒ Is not attached because the document is already in the U.S. application.

b. **A copy of all claims which were indicated as having novelty, inventive step and industrial applicability in the above-identified corresponding PCT application(s).**

☒ Is attached.

☐ Is not attached because the document is already in the U.S. application.

c. **English translations of the documents in a. and b. above are attached (if the documents are not in the English language). A statement that the English translation is accurate is attached for the document in b. above.**

This collection of information is required by 35 U.S.C. 119, 37 CFR 1.55, and 37 CFR 1.102(d). The information is required to obtain or retain a benefit by the public, which is to file (and by the USPTO to process) an application. Confidentiality is governed by 35 U.S.C. 122 and 37 CFR 1.11 and 1.14. This collection is estimated to take 2 hours to complete, including gathering, preparing, and submitting the completed application form to the USPTO. Time will vary depending upon the individual case. Any comments on the amount of time you require to complete this form and/or suggestions for reducing this burden should be sent to the Chief Information Officer, U.S. Patent and Trademark Office, U.S. Department of Commerce, P.O. Box 1450, Alexandria, VA 22313-1450. DO NOT SEND FEES OR COMPLETED FORMS TO THIS ADDRESS.

REQUEST FOR PARTICIPATION IN THE PCT-PPH PILOT PROGRAM BETWEEN THE EPO AND THE USPTO

(continued)

Application No.:	
First Named Inventor:	

d. **(1) An information disclosure statement listing the documents cited in the international work products (ISR, WO/ISA, WO/IPEA, IPER) of the corresponding PCT application.**

☐ Is attached

■ Has already been filed in the above-identified U.S. application on March 31, 2011

(2) Copies of all documents (except) for U.S. patents or U.S. patent application publications)

☐ Are attached.

■ Have already been filed in the above-identified U.S. application on March 31, 2011

II. Claims Correspondence Table:

Claims in US Application	Patentable Claims in the corresponding PCT Application	Explanation regarding the correspondence
9	14	US Claim 9 hereby amended to be substantially the same as PCT Claim 14
10-12	14	US Claims 10-12 depend on US Claim 9 and are narrower in scope than PCT Claim 14
14	14	US Claim 14 depends on US Claim 9 and are narrower in scope than PCT Claim 14
15	5	US Claim 15 hereby amended to be substantially the same as PCT Claim 5
16-18	5	US Claims 16-18 depend on US Claim 15 and are narrower in scope than PCT Claim 5
20-21	5	US Claims 20-21 depend on US Claim 15 and are narrower in scope than PCT Claim 5
23-24	5	US Claims 23-24 depend on US Claim 15 and are narrower in scope than PCT Claim 5
25-31	14	US Claims 25-31 depend on US Claim 9 and are narrower in scope than PCT Claim 14

III. All the claims in the US application sufficiently correspond to the patentable claims in the corresponding PCT application.

Signature 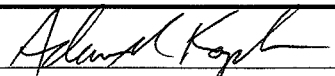	Date December 8, 2011
Name (Print/Typed) Adam M Kaplan	Registration Number 59,109

Privacy Act Statement

The **Privacy Act of 1974 (P.L. 93-579)** requires that you be given certain information in connection with your submission of the attached form related to a patent application or patent. Accordingly, pursuant to the requirements of the Act, please be advised that: (1) the general authority for the collection of this information is 35 U.S.C. 2(b)(2); (2) furnishing of the information solicited is voluntary; and (3) the principal purpose for which the information is used by the U.S. Patent and Trademark Office is to process and/or examine your submission related to a patent application or patent. If you do not furnish the requested information, the U.S. Patent and Trademark Office may not be able to process and/or examine your submission, which may result in termination of proceedings or abandonment of the application or expiration of the patent.

The information provided by you in this form will be subject to the following routine uses:

1. The information on this form will be treated confidentially to the extent allowed under the Freedom of Information Act (5 U.S.C. 552) and the Privacy Act (5 U.S.C 552a). Records from this system of records may be disclosed to the Department of Justice to determine whether disclosure of these records is required by the Freedom of Information Act.
2. A record from this system of records may be disclosed, as a routine use, in the course of presenting evidence to a court, magistrate, or administrative tribunal, including disclosures to opposing counsel in the course of settlement negotiations.
3. A record in this system of records may be disclosed, as a routine use, to a Member of Congress submitting a request involving an individual, to whom the record pertains, when the individual has requested assistance from the Member with respect to the subject matter of the record.
4. A record in this system of records may be disclosed, as a routine use, to a contractor of the Agency having need for the information in order to perform a contract. Recipients of information shall be required to comply with the requirements of the Privacy Act of 1974, as amended, pursuant to 5 U.S.C. 552a(m).
5. A record related to an International Application filed under the Patent Cooperation Treaty in this system of records may be disclosed, as a routine use, to the International Bureau of the World Intellectual Property Organization, pursuant to the Patent Cooperation Treaty.
6. A record in this system of records may be disclosed, as a routine use, to another federal agency for purposes of National Security review (35 U.S.C. 181) and for review pursuant to the Atomic Energy Act (42 U.S.C. 218(c)).
7. A record from this system of records may be disclosed, as a routine use, to the Administrator, General Services, or his/her designee, during an inspection of records conducted by GSA as part of that agency's responsibility to recommend improvements in records management practices and programs, under authority of 44 U.S.C. 2904 and 2906. Such disclosure shall be made in accordance with the GSA regulations governing inspection of records for this purpose, and any other relevant (*i.e.*, GSA or Commerce) directive. Such disclosure shall not be used to make determinations about individuals.
8. A record from this system of records may be disclosed, as a routine use, to the public after either publication of the application pursuant to 35 U.S.C. 122(b) or issuance of a patent pursuant to 35 U.S.C. 151. Further, a record may be disclosed, subject to the limitations of 37 CFR 1.14, as a routine use, to the public if the record was filed in an application which became abandoned or in which the proceedings were terminated and which application is referenced by either a published application, an application open to public inspection or an issued patent.
9. A record from this system of records may be disclosed, as a routine use, to a Federal, State, or local law enforcement agency, if the USPTO becomes aware of a violation or potential violation of law or regulation.

UNITED STATES PATENT AND TRADEMARK OFFICE

Commissioner for Patents
United States Patent and Trademark Office
P.O. Box 1450
Alexandria, VA 22313-1450
www.uspto.gov

ZEBRA/ALSTON & BIRD
101 S. TRYON STREET
SUITE 4000
CHARLOTTE NC 28280-4000

MAILED
JAN 30 2012
OFFICE OF PETITIONS

In re Application of
TSIRLINE, et al
Application No.: 12/618,107
Filed: November 13, 2009
Attorney Docket No.: 054054/373974
For: ENCODING MODULE, ASSOCIATED ENCODING ELEMENT, CONNECTOR, PRINTER-ENCODER AND ACCESS CONTROL SYSTEM

: DECISION ON REQUEST TO
: PARTICIPATE IN THE PATENT
: PROSECUTION HIGHWAY
: PROGRAM AND PETITION
: TO MAKE SPECIAL UNDER
: 37 CFR 1.102(a)

This is a decision on the request to participate in the PCT Patent Prosecution Highway (PCT-PPH) pilot program and the petition under 37 CFR 1.102(a), filed on December 8, 2011 to make the above-identified application special.

The request and petition are **GRANTED**.

Discussion

A grantable request to participate in the PCT-PPH pilot program and petition to make special require:

(1) The U.S. application must have an eligible relationship to one or more PCT applications where the ISA or IPEA are the JPO, EPO, Australia, Austria, KIPO, NPI, Russia, Spain, Sweden, Finland, China, or USPTO;

(2) At least one claim in the PCT application has novelty, inventive step, and industrial applicability and must be free of any observations in Box VIII in the latest work product in the international stage or applicant must identify and explain why the claim(s) is/are not subject to the observation in Box VIII;

(3) Applicant must submit a copy of the claim(s) from the PCT application(s) that have novelty, inventive step, and industrial applicability along with an English translation thereof and a statement that the English translation is accurate, if the claims are not in the English language;

(4) All the claims in the U.S. application must sufficiently correspond or be amended to sufficiently correspond to the claim(s) that have novelty, inventive step, and industrial applicability in the PCT application(s);

(5) Examination of the U.S. application has not begun;

(6) Applicant must submit a copy of the latest international work product from the PCT application indicating that the claim(s) have novelty, inventive step, and industrial applicability along with an English translation thereof and a statement that the English translation is accurate if the latest international work product is not in the English language;

(7) Applicant must submit an IDS listing the documents cited by the PCT examiner in the international work product along with copies of documents except U.S. patents or U.S. patent application publications.

The request to participate in the PPH pilot program and petition comply with the above requirements. Accordingly, the above-identified application has been accorded "special" status.

Inquiries concerning this decision should be directed to Diane Goodwyn at (571) 272-6735.

All other inquiries concerning the examination or status of the application is accessible in the PAIR system at http://www.uspto.gov/ebc.index.html.

This application is being forwarded to Technology Center Art Unit 2612 for action on the merits commensurate with this decision.

David Bucci
Petitions Examiner
Office of Petitions

UNITED STATES PATENT AND TRADEMARK OFFICE

Commissioner for Patents
United States Patent and Trademark Office
P.O. Box 1450
Alexandria, VA 22313-1450
www.uspto.gov

STERNE, KESSLER, GOLDSTEIN & FOX P.L.L.C.
1100 NEW YORK AVENUE, N.W.
WASHINGTON, DC 20005

MAILED

APR 05 2011

OFFICE OF PETITIONS

Applicant: Shi, et al.
Appl. No.: 12/618,178
Filing Date: November 13, 2009
Title: INTERLEUKIN 17 RECEPTOR-LIKE PROTEIN
Attorney Docket No.: 1488.2100009/EKS/SAC
Pub. No.:2010/0143246 A1
Pub. Date: June 10, 2010

This is a decision on the requests for a corrected patent application publication under 37 CFR 1.221(b), received on August 10, 2010, for the above-identified application.

The request is DISMISSED.

Applicant requests that the application be republished because the patent application publication contains material errors, wherein the numbering for some of the amino acid listings has shifted to the left.

37 CFR 1.221 (b) is applicable: "only when the Office makes a **material mistake** which is apparent from Office records.... Any request for a corrected publication or revised patent application publication other than provided as provided in paragraph (a) of this section must be filed within two months from the date of the patent application publication. This period is not extendable" A material mistake must affect the public's ability to appreciate the technical disclosure of the patent application publication, to determine the scope of the patent application publication, or to determine the scope of the provisional rights that an applicant may seek to enforce upon issuance of a patent. [1]

The error in the publication wherein the numbering for some of the amino acids sequences has shifted is not a material Office error under 37 CFR 1.221(b). The error does not affect the public's ability to appreciate the technical disclosure of the patent application publication, to determine the scope of the patent application publication, or to determine the scope of the provisional rights that an applicant may seek to enforce upon issuance of a patent.

The applicant is advised that a "request for republication of an application previously published" may be filed under 37 CFR 1.221(a). Such a request for republication "must include a copy of

[1] Changes to Implement Eighteen-Month Publication of Patent Applications, 65 FR 57023, 57038 (Sept. 20, 2000), 1239, Off. Gaz. Pat. Office Notices 63, 75 (Oct. 10, 2000) (final rule).

the application compliance with the Office's electronic filing system requirements and be accompanied by the publication fee set forth in § 1.18(d) and the processing fee set forth in § 1.17(i)." If the request for republication does not comply with the electronic filing system requirements, the republication will not take place and the publication fee set forth in § 1.18(d) will be refunded. The processing fee will be retained.

A guide for filing a request for a Pre-Grant Publication, such as a request for republication, may be found on the link below:

http://www.uspto.gov/patents/process/file/efs/guidance/index.jsp
OR
http://www.uspto.gov/ebc/portal/efs/pgpub_quickstart.pdf

Any request for republication under 37 CFR 1.221(a), must be submitted via the EFS system, as a "Pre-Grant Publication".

Inquiries relating to this matter may be directed to Mark Polutta at (571) 272-7709.

Mark Polutta
Senior Legal Advisor
Office of Patent Legal Administration
Office of the Deputy Commissioner
for Patent Examination Policy

UNITED STATES PATENT AND TRADEMARK OFFICE

Commissioner for Patents
United States Patent and Trademark Office
P.O. Box 1450
Alexandria, VA 22313-1450
www.uspto.gov

FARIBA SIRJANI
925 DELWARE AVENUE, APT. 9C
BUFFALO, NY 14209

MAILED

MAR 14 2011

OFFICE OF PETITIONS

In re Application of
Hasmukh Dholakiya
Application No. 12/618,215
Filed: November 13, 2009
Attorney Docket No. 278-030

DECISION ON PETITION
TO WITHDRAW
FROM RECORD

This is a decision on the Request to Withdraw as attorney or agent of record under 37 C.F.R. § 1.36(b), filed February 2, 2011.

The request is **APPROVED**.

A grantable request to withdraw as attorney/agent of record must be signed by every attorney/agent seeking to withdraw or contain a clear indication that one attorney is signing on behalf of another/others. A request to withdraw will not be approved unless at least 30 (thirty) days would remain between the date of approval and the later of the expiration date of a time to file a response or the expiration date of the maximum time period which can be extended under 37 C.F.R. § 1.136(a).

The request was signed by Fariba Sirjani. Fariba Sirjani have been withdrawn as attorney or agent of record; all other attorneys remain of record.

The correspondence address of record remains unchanged.

Telephone inquiries concerning this decision should be directed to Terri Johnson at 571-272-2991.

/Terri Johnson/
Terri Johnson
Petitions Examiner
Office of Petitions

cc: **MEREDITH & KEYHANI, PLLC**
330 MADISON AVE.
6TH FLOOR
NEW YORK NY 10017

UNITED STATES PATENT AND TRADEMARK OFFICE

Commissioner for Patents
United States Patent and Trademark Office
P.O. Box 1450
Alexandria, VA 22313-1450
www.uspto.gov

THE DOW CHEMICAL COMPANY / DOBRUSIN & THENNISCH PC
29 W. LAWRENCE ST., SUITE 210
PONTIAC MI 48342

MAILED

NOV 2 2 2010

OFFICE OF PETITIONS

In re Application of	:	
Schmatloch et al.	:	
Application No. 12/618,298	:	DECISION ON PETITION
Filed: November 13, 2009	:	UNDER 37 CFR 1.78(a)(6)
Attorney Docket No. 65695 (1062-074P1)	:	

This is a decision on the petition under 37 CFR 1.78(a)(6), filed October 13, 2010 to accept an unintentionally delayed claim under 35 U.S.C. § 119(e) for the benefit of a prior-filed provisional application as set forth in the concurrently filed Application Data Sheet (ADS).

The petition is **DISMISSED**.

A petition under 37 CFR 1.78(a)(6) is only applicable to those applications filed on or after November 29, 2000. Further, the petition is appropriate only after expiration of the period specified in 37 CFR 1.78(a)(5)(ii) and must be filed during the pendency of the nonprovisional application. In addition, the petition must be accompanied by:

(1) the reference required by 35 U.S.C. § 119(e) and 37 CFR 1.78(a)(5)(i) to the prior-filed application, unless previously submitted;
(2) the surcharge set forth in § 1.17(t); and
(3) a statement that the entire delay between the date the claim was due under 37 CFR 1.78(a)(5)(ii) and the date the claim was filed was unintentional. The Commissioner may require additional information where there is a question whether the delay was unintentional.

This petition lacks item (3).

Petitioner has failed to submit the required statement that the entire delay between the date the claim was due under 37 CFR 1.78(a)(5)(ii) and the date the claim was filed was unintentional.

Petitioner contends that "the claim was timely made because it was made upon filing of the application." However, the original specification states, "The present application claims the benefit of the filing date of Provisional Application No. 60/913,703 (filed April 24, 2007) and International PCT Application No. PCT/US08/54509 (filed February 21, 2008)," wherein the present application is the instant application, Application No. 12/618,298. The amendment to the specification, filed in the Preliminary Amendment, only claimed the priority to Application No. 12/041,915. Further, the original

Application Data Sheet, filed November 13, 2009, clearly only claimed priority to nonprovisional Application No. 12/041,915. Therefore, petitioner had not previously properly claimed the priority requested. Accordingly, as the unintentional delay statement was not included in the instant petition, the petition is hereby dismissed.

Additionally, as authorized, the $1,410.00 fee required by 37 CFR 1.78(a)(6)(ii) will be charged to petitioner's deposit account as authorized October 13, 2010.

Further correspondence with respect to this matter should be addressed as follows:

By mail: Mail Stop PETITIONS
Commissioner for Patents
Post Office Box 1450
Alexandria, VA 22313-1450

By hand: Customer Window located at:

U.S. Patent and Trademark Office
Customer Service Window Randolph Building
401 Dulany Street
Alexandria, VA 22314

By fax: (571) 273-8300
ATTN: Office of Petitions

Any questions concerning this matter may be directed to Joan Olszewski at (571) 272-7751.

/Liana Walsh/
Liana Walsh
Petitions Examiner
Office of Petitions

UNITED STATES PATENT AND TRADEMARK OFFICE

Commissioner for Patents
United States Patent and Trademark Office
P.O. Box 1450
Alexandria, VA 22313-1450
www.uspto.gov

THE DOW CHEMICAL COMPANY/DOBRUSIN & THENNISCH PC
29 W. LAWRENDE ST.
SUITE 210
PONTIAC MI 48342

MAILED

JAN 03 2011

OFFICE OF PETITIONS

In re Application of
Schmatloch et al
Application No. 12/618,298
Filed: November 13, 2009
Attorney Docket No. 65695-US-DIV[1] (1062-074

DECISION ON REQUEST FOR REFUND

This is a decision on the Request For Refund filed December 3, 2010.

The request is **DISMISSED**.

A communication entitled "PETITION FOR CORRECTION OF PRIORITY CLAIM" was filed in the above application on October 13, 2010. The petition was properly treated under 37 CFR 1.78(a)(6). A decision granting the petition was mailed on November 22, 2010.

Petitioner now files the above request for refund of the petition fee and asserts that the petition did not request acceptance of an unintentionally delayed claim for priority.

Petitioner was notified in the decision mailed November 22, 2010, that "the claim was timely made because it was made upon filing of the application." However, the original specification states, "The present application claims the benefit of the filing date of Provisional Application No 60/913,703 (filed April 24, 2007) and International PCT Application No. PCT/US08/54509 (filed February 21, 2008)," wherein the present application is the instant application, Application No. 12/618,298. The amendment to the specification, filed in the Preliminary Amendment, only claimed the priority to Application No. 12/041,915."

The filing receipt mailed November 15, 2010, which indicated the desired benefit claim was mailed prematurely because a decision on the petition had not been rendered.

Further, the petition was labeled as a petition, asking for a chain of priority not asked for before. Therefore, a decision was rendered under 37 CFR 1.78(a)(6), which requires a petition fee under 37 CFR 1.17(t).

In view of the above, the request for refund of the petition fee is dismissed.

Any questions concerning this matter may be directed to the undersigned at (571) 272-3208.

/KOC/
Karen Creasy
Petitions Examiner
Office of Petitions

UNITED STATES PATENT AND TRADEMARK OFFICE

Commissioner for Patents
United States Patent and Trademark Office
P.O. Box 1450
Alexandria, VA 22313-1450
www.uspto.gov

SPILMAN THOMAS & BATTLE PLLC
C/O CPA Global
P.O. BOX 52050
MINNEAPOLIS MN 55402

MAILED

JAN 24 2011

OFFICE OF PETITIONS

ON PETITION

In re Application of :
Kelle et al. :
Application No.12/618,321 :
Filed: November 13, 2009 :
Attorney Docket No. 012608.0024 :

This is a decision on the petition under the unintentional provisions of 37 CFR 1.137(b), filed November 30, 2010, to revive the above-identified application.

The petition is **GRANTED**..

This above-identified application became abandoned for failure to file a response to a Notice to File Corrected Application Papers, which was mailed on December 2, 2009. The Notice to File Corrected Application Papers set an extendable two (2) month period for reply. No timely request for extension of time was obtained under the provisions of 37 CFR §1.136(a). Accordingly, this application became abandoned on February 3, 2010. A Notice of Abandonment was mailed August 5, 2010.

The petition satisfies the requirements of 37 CFR 1.137(b) in that petitioner has supplied (1) the reply in the form of the replacement drawings (2) the petition fee of $810, and (3) a proper statement of unintentional delay.

The file does not indicate a change of address has been submitted, although the address given on the petition differs from the address of record. If appropriate, a change of address should be filed in accordance with MPEP 601.03. A courtesy copy of this decision is being mailed to the address given on the petition; however, the Office will mail all future correspondence solely to the address of record.

This application is being referred to the Office of Patent Application Processing for pre-examination processing.

Telephone inquiries concerning this decision should be directed to the undersigned at (571) 272-3215.

Charlema Grant
Petitions Attorney
Office of Petitions

Cc: Richard James
One Oxford Centre, Suite 3440
301 Grant Street
Pittsburgh, PA 15219

UNITED STATES PATENT AND TRADEMARK OFFICE

Commissioner for Patents
United States Patent and Trademark Office
P.O. Box 1450
Alexandria, VA 22313-1450
www.uspto.gov

SENNIGER POWERS LLP
100 NORTH BROADWAY
17TH FLOOR
ST LOUIS MO 63102

MAILED

NOV 02 2010

OFFICE OF PETITIONS

In re Application of	:	
Delbert E. Day, et al.	:	
Application No. 12/618,333	:	DECISION ON PETITION
Filed: November 13, 2009	:	TO MAKE SPECIAL UNDER
Attorney Docket No. UMR 1553.4 (02UMR011)	:	37 CFR 1.102(c)(1)
	:	

This is a decision on the petition under 37 CFR 1.102(c)(1), filed October 7, 2010, to make the above-identified application special based on applicant's age as set forth in M.P.E.P. § 708.02, Section IV.

The petition is **GRANTED**.

A grantable petition to make an application special under 37 CFR 1.102(c)(1) and MPEP § 708.02, Section IV: Applicant's Age must be accompanied by evidence showing that at least one of the applicants is 65 years of age, or more, such as a birth certificate or a statement by applicant. No fee is required

The instant petition includes a statement from the applicant, Delbert E. Day declaring that he is 65 years of age or older. Accordingly, the above-identified application has been accorded "special" status.

Telephone inquiries concerning this decision should be directed to Terri Johnson at 571-272-2991.

All other inquiries concerning either the examination or status of the application should be directed to the Technology Center.

The application is being forwarded to the Technology Center Art Unit 1615 for action on the merits commensurate with this decision.

/Terri Johnson/
Terri Johnson
Petitions Examiner
Office of Petitions

UNITED STATES PATENT AND TRADEMARK OFFICE

Commissioner for Patents
United States Patent and Trademark Office
P.O. Box 1450
Alexandria, VA 22313-1450
www.uspto.gov

Decision Date : March 23, 2012

In re Application of :

Tadahiro Imada

DECISION ON PETITION

UNDER CFR 1.313(c)(2)

Application No : 12618384

Filed : 13-Nov-2009

Attorney Docket No : 08-40976

This is an electronic decision on the petition under 37 CFR 1.313(c)(2), filed March 23, 2012 , to withdraw the above-identified application from issue after payment of the issue fee.

The petition is **GRANTED.**

The above-identified application is withdrawn from issue for consideration of a submission under 37 CFR 1.114 (request for continued examination). See 37 CFR 1.313(c)(2).

Petitioner is advised that the issue fee paid in this application cannot be refunded. If, however, this application is again allowed, petitioner may request that it be applied towards the issue fee required by the new Notice of Allowance.

Telephone inquiries concerning this decision should be directed to the Patent Electronic Business Center (EBC) at 866-217-9197.

This application file is being referred to Technology Center AU 2826 for processing of the request for continuing examination under 37 CFR 1.114 .

Office of Petitions

Doc Code: PET.AUTO Document Description: Petition automatically granted by EFS-Web	PTO/SB/140 U.S. Patent and Trademark Office Department of Commerce

Electronic Petition Request	**PETITION TO WITHDRAW AN APPLICATION FROM ISSUE AFTER PAYMENT OF THE ISSUE FEE UNDER 37 CFR 1.313(c)**
Application Number	12618384
Filing Date	13-Nov-2009
First Named Inventor	Tadahiro Imada
Art Unit	2826
Examiner Name	VICTOR MANDALA
Attorney Docket Number	08-40976
Title	COMPOUND SEMICONDUCTOR DEVICE AND MANUFACTURING METHOD OF THE SAME

An application may be withdrawn from issue for further action upon petition by the applicant. To request that the Office withdraw an application from issue, applicant must file a petition under this section including the fee set forth in § 1.17(h) and a showing of good and sufficient reasons why withdrawal of the application from issue is necessary.

APPLICANT HEREBY PETITIONS TO WITHDRAW THIS APPLICATION FROM ISSUE UNDER 37 CFR 1.313(c).

A grantable petition requires the following items:
(1) Petition fee; and
(2) One of the following reasons:
(a) Unpatentability of one or more claims, which must be accompanied by an unequivocal statement that one or more claims are unpatentable, an amendment to such claim or claims, and an explanation as to how the amendment causes such claim or claims to be patentable;
(b) Consideration of a request for continued examination in compliance with § 1.114 (for a utility or plant application only); or
(c) Express abandonment of the application. Such express abandonment may be in favor of a continuing application, but not a CPA under 37 CFR 1.53(d).

Petition Fee

☐ Applicant claims SMALL ENTITY status. See 37 CFR 1.27.

☐ Applicant is no longer claiming SMALL ENTITY status. See 37 CFR 1.27(g)(2).

☐ Applicant(s) status remains as SMALL ENTITY.

☒ Applicant(s) status remains as other than SMALL ENTITY

Reason for withdrawal from issue

◯ One or more claims are unpatentable ◉ Consideration of a request for continued examination (RCE) (List of Required Documents and Fees) ◯ Applicant hereby expressly abandons the instant application (any attorney/agent signing for this reason must have power of attorney pursuant to 37 CFR 1.32(b)).
RCE request,submission, and fee. ☒ I certify, in accordance with 37 CFR 1.4(d)(4) that : The RCE request ,submission, and fee have already been filed in the above-identified application on 2012.03.26 ☐ Are attached.
THIS PORTION MUST BE COMPLETED BY THE SIGNATORY OR SIGNATORIES I certify, in accordance with 37 CFR 1.4(d)(4) that I am: ◉ An attorney or agent registered to practice before the Patent and Trademark Office who has been given power of attorney in this application. ◯ An attorney or agent registered to practice before the Patent and Trademark Office, acting in a representative capacity. ◯ A sole inventor ◯ A joint inventor; I certify that I am authorized to sign this submission on behalf of all of the inventors ◯ A joint inventor; all of whom are signing this e-petition ◯ The assignee of record of the entire interest that has properly made itself of record pursuant to 37 CFR 3.71

Signature	/Scott Elchert/
Name	Scott Elchert
Registration Number	55149

UNITED STATES PATENT AND TRADEMARK OFFICE

Commissioner for Patents
United States Patent and Trademark Office
P.O. Box 1450

ROPES & GRAY LLP
IPRM - Floor 43
PRUDENTIAL TOWER
800 BOYLSTON STREET
BOSTON MA 02199-3600

MAILED
MAY 06 2011
OFFICE OF PETITIONS

In re Application of	:	
Robert J. BOBROW et al.	:	DECISION GRANTING PETITION
Application No. 12/618,389	:	UNDER 37 CFR 1.181
Filed: November 13, 2009	:	
Atty. Docket No.: BBNT-P05-089	:	

This is a decision on the petition under 37 CFR 1.181, filed March 9, 2011, to withdraw the holding of abandonment in the above-identified application.

The petition is **GRANTED.**

The application was held abandoned for failure to reply in a timely manner to non-final Office action mailed June 6, 2010, which set a shortened statutory period of reply of three (3) months. A Notice of Abandonment was mailed on February 23, 2011.

Petitioner asserts that a reply was timely filed on November 10, 2010.

A review of the file record indicates that a reply was filed on November 10, 2010, with an extension of time of two (2) months. Accordingly, as a reply was timely filed, the Notice of Abandonment mailed February 23, 2011 is hereby vacated and the holding of abandonment withdrawn.

Telephone inquiries relating to this decision should be directed to Robert DeWitty, Petitions Examiner, Office of Petitions (571-272-8427).

The application file will be referred to Technology Center Art Unit 2628 for further action on the Response filed November 10, 2010.

for David Bucci
Petitions Examiner
Office of Petitions

UNITED STATES PATENT AND TRADEMARK OFFICE

Commissioner for Patents
United States Patent and Trademark Office
P.O. Box 1450
Alexandria, VA 22313-1450
www.uspto.gov

NIXON PEABODY, LLP
401 9TH STREET, NW
SUITE 900
WASHINGTON DC 20004-2128

MAILED

OCT 19 2010

OFFICE OF PETITIONS

In re Application of	:	
Winter et al.	:	DECISION ON PETITION
Application No. 12/618,410	:	TO WITHDRAW
Filed: November 13, 2009	:	FROM RECORD
Attorney Docket No. 741439-59	:	

This is a decision on the Request to Withdraw as attorney or agent of record under 37 C.F.R. § 1.36(b), filed September 29, 2010.

The request is **NOT APPROVED**.

The Office will only accept correspondence address changes to the most current address information provided for the assignee of the entire interest *who properly became of record under 37 CFR 3.71,* or, if no assignee of the entire interest has properly been made of record, the most current address information provided for the first named inventor. 37 CFR 3.71(c) states:

> ***An assignee becomes of record either in a national patent application or a reexamination proceeding by filing a statement in compliance with § 3.73(b) that is signed by a party who is authorized to act on behalf of the assignee.***

Therefore, as there is currently no Statement under 37 CFR 3.73(b) of record in the instant application, the Office cannot change the correspondence address to the address on the Request to Withdraw.

All future communications from the Office will continue to be directed to the above-listed address until otherwise notified by applicant.

Currently, there is no outstanding Office action that requires a reply.

Telephone inquires concerning this decision should be directed to the undersigned at (571) 272-7751.

Joan Olszewski
Petitions Examiner
Office of Petitions

UNITED STATES PATENT AND TRADEMARK OFFICE

UNITED STATES DEPARTMENT OF COMMERCE
United States Patent and Trademark Office
Address: COMMISSIONER FOR PATENTS
P.O. Box 1450
Alexandria, Virginia 22313-1450
www.uspto.gov

APPLICATION NO.	FILING DATE	FIRST NAMED INVENTOR	ATTORNEY DOCKET NO.	CONFIRMATION NO.
12/618,422	11/13/2009	Hwan Hee JEONG	3449-1272PUS1	6588

2292 7590 08/12/2010
BIRCH STEWART KOLASCH & BIRCH
PO BOX 747
FALLS CHURCH, VA 22040-0747

EXAMINER	
GURLEY, LYNNE ANN	
ART UNIT	PAPER NUMBER
2811	

NOTIFICATION DATE	DELIVERY MODE
08/12/2010	ELECTRONIC

Please find below and/or attached an Office communication concerning this application or proceeding.

The time period for reply, if any, is set in the attached communication.

Notice of the Office communication was sent electronically on above-indicated "Notification Date" to the following e-mail address(es):

mailroom@bskb.com

UNITED STATES PATENT AND TRADEMARK OFFICE

Commissioner for Patents
United States Patent and Trademark Office
P.O. Box 1450
Alexandria, VA 22313-1450
www.uspto.gov

BIRCH STEWART KOLASCH & BIRCH
PO BOX 747
FALLS CHURCH VA 22040-0747

In re Application of	**: DECISION ON REQUEST TO**
Hwan Hee JEONG	**: PARTICIPATE IN THE PATENT**
Application No.: 12/618,422	**: PROSECUTION HIGHWAY**
Filed: 13 November 2009	**: PROGRAM AND PETITION**
Attorney Docket No.: 3449-1272PUS1	**: TO MAKE SPECIAL UNDER**
For: SEMICONDUCTOR LIGHT EMITTING DEVICE	**: 37 CFR 1.102(d)**

This is a decision on the request to participate in the Patent Prosecution Highway (PPH) program and the petition under 37 CFR 1.102(d), filed 06 August 2010, to make the above-identified application special.

The request and petition are **GRANTED**.

Discussion

A grantable request to participate in the PPH program and petition to make special require:

1. The U.S. application is

   a. a Paris Convention application which either
      i. validly claims priority under 35 U.S.C. 119(a) and 37 CFR 1.55 to one or more applications filed in the KIPO, or
      ii. validly claims priority under 35 U.S.C. 119(a)/365(a) to a PCT application that contains no priority claims,

   or

   b. a national stage application under the PCT (an application which entered the national stage in the U.S. from a PCT international application after compliance with 35 U.S.C. 371), which PCT application
      i. validly claims priority under 35 U.S.C. 365(b) to an application filed in the KIPO, or
      ii. validly claims priority under 35 U.S.C. 365(b) to a PCT application that contains no priority claims, or
      iii. contains no priority claim,

   or

   c. a so-called bypass application filed under 35 U.S.C. 111(a) which validly claims benefit under 35 U.S.C. 120 to a PCT application, which PCT application
      i. validly claims priority under 35 U.S.C. 365(b) to an application filed in the KIPO, or

ii. validly claims priority under 35 U.S.C. 365(b) to a PCT application that contains no priority claims, or
iii. contains no priority claim;

2. Applicant must submit a copy of:
   a. The allowable/patentable claim(s) from the KR application(s);
   b. An English translation of the allowable/patentable claim(s), and
   c. A statement that the English translation is accurate (if the claims were published in a language other than English);
3. Applicant must:
   a. Ensure that all the claims in the U.S. application must sufficiently correspond or be amended to sufficiently correspond to the allowable/patentable claim(s) in the KR application(s), and
   b. Submit a claims correspondence table in English;
4. Examination of the U.S. application has not begun;
5. Applicant must submit:
   a. A copy of all the office actions (which are relevant to patentability), excluding "Decision to Grant a Patent" from each of the KR application(s) containing the allowable/patentable claim(s);
   b. An English language translation of the KIPO office action; and
   c. A statement that the English translation is accurate (if the office actions are not in the English language);
6. Applicant must submit:
   a. An IDS listing the documents cited by the KIPO examiner in the KIPO office action (unless already filed in this application); and
   b. Copies of all the documents cited in the KIPO office action, except U.S. patents or U.S. patent application publications (unless already filed in this application);

The request to participate in the PPH program and petition comply with the above requirements. Accordingly, the above-identified application has been accorded "special" status.

Any response must be submitted via EFS-Web.

Telephone inquiries concerning this decision should be directed to Lee W. Young at 571-272-4549.

All other inquiries concerning the examination or status of the application is accessible in the PAIR system at http://uspto.gov/ebc/index.html.

Lee W. Young
TQAS
Technology Center 2800

UNITED STATES PATENT AND TRADEMARK OFFICE

Commissioner for Patents
United States Patent and Trademark Office
P.O. Box 1450
Alexandria, VA 22313-1450
www.uspto.gov

FOLEY & LARDNER LLP
150 EAST GILMAN STREET
P.O. BOX 1497
MADISON, WI 53701-1497

MAILED

AUG 02 2010

OFFICE OF PETITIONS

In re Application of :
Benjamin J. HOBBINS :
Application No. 12/618,431 : DECISION ON PETITION TO
Filed: November 13, 2009 : WITHDRAW FROM RECORD
Attorney Docket No. **070688-0110** :

This is a decision on the Request to Withdraw as attorney or agent of record under 37 C.F.R. § 1.36(b), filed July 22, 2010.

The request is **APPROVED**.

A grantable request to withdraw as attorney/agent of record must be signed by every attorney/agent seeking to withdraw or contain a clear indication that one attorney is signing on behalf of another/others.

The request was signed by Paul S. Hunter on behalf of all attorneys of record. All attorneys/agents associated have been withdrawn. Applicant is reminded that there is no attorney of record at this time.

All future communications from the Office will be directed to the first named signing inventor at the address below until otherwise properly notified by the applicant.

Telephone inquiries concerning this decision should be directed to the undersigned at 571-272-7253.

/Monica A. Graves/
Petitions Examiner, Office of Petitions

cc: **BEN J. HOBBINS**
LAKE RESOURCES GROUP
1007 ERIC LANE
WAUNAKEE, WI 53597

UNITED STATES PATENT AND TRADEMARK OFFICE

Commissioner for Patents
United States Patent and Trademark Office
P.O. Box 1450
Alexandria, VA 22313-1450
www.uspto.gov

MAILED

APR 19 2011

OFFICE OF PETITIONS

DLA PIPER LLP (US)
2000 UNIVERSITY AVENUE
EAST PALO ALTO CA 94303-2248

In re Application of	:	
Lazar A. Shifrin	:	
Application No. 12/618,450	:	DECISION ON PETITION
Filed: November 13, 2009	:	
Attorney Docket No. **365188-991060**	:	

This is a decision on the petition under the unintentional provisions of 37 CFR 1.137(b), filed January 04, 2011, to revive the above-identified application.

The petition is **GRANTED**.

This application became abandoned for failure to timely pay the issue and publication fees on or before December 14, 2010, as required by the Notice of Allowance and Fee(s) Due, mailed September 14, 2010. Accordingly, the date of abandonment of this application December 15, 2010.

The petition satisfies the requirements of 37 CFR 1.137(b) in that petitioner has supplied (1) the reply in the form of payment of the issue fee of $1510 and the publication fee of $300, (2) the petition fee of $1620; and (3) a proper statement of unintentional delay. Accordingly, the Issue Fee is accepted as having been unintentionally delayed.

Telephone inquiries concerning this decision should be directed to Tredelle D. Jackson at (571) 272-2783.

This application is being referred to the Office of Data Management for processing into a patent.

Ramesh Krishnamurthy
Petitions Examiner
Office of Petitions

UNITED STATES PATENT AND TRADEMARK OFFICE

UNITED STATES DEPARTMENT OF COMMERCE
United States Patent and Trademark Office
Address: COMMISSIONER FOR PATENTS
P.O. Box 1450
Alexandria, Virginia 22313-1450
www.uspto.gov

APPLICATION NO.	FILING DATE	FIRST NAMED INVENTOR	ATTORNEY DOCKET NO.	CONFIRMATION NO.
12/618,490	11/13/2009	Hwan Hee JEONG	3449-1273PUS1	6715

2292 7590 04/13/2011

BIRCH STEWART KOLASCH & BIRCH
PO BOX 747
FALLS CHURCH, VA 22040-0747

EXAMINER	
MANDALA, VICTOR A	

ART UNIT	PAPER NUMBER
2826	

NOTIFICATION DATE	DELIVERY MODE
04/13/2011	ELECTRONIC

Please find below and/or attached an Office communication concerning this application or proceeding.

The time period for reply, if any, is set in the attached communication.

Notice of the Office communication was sent electronically on above-indicated "Notification Date" to the following e-mail address(es):

mailroom@bskb.com

UNITED STATES PATENT AND TRADEMARK OFFICE

Commissioner for Patents
United States Patent and Trademark Office
P.O. Box 1450
Alexandria, VA 22313-1450
www.uspto.gov

BIRCH STEWART KOLASCH & BIRCH
PO BOX 747
FALLS CHURCH VA 22040-0747

In re Application of	**: DECISION ON REQUEST TO**
Hwan Hee JEONG	**: PARTICIPATE IN THE PATENT**
Application No.: 12/619,490	**: PROSECUTION HIGHWAY**
Filed: 13 November 2009	**: PROGRAM AND PETITION**
Attorney Docket No.: 3449-1273PUS1	**: TO MAKE SPECIAL UNDER**
For: SEMICONDUCTOR LIGHT EMITTING DEVICE	**: 37 CFR 1.102(a)**

This is a decision on the request to participate in the Patent Prosecution Highway (PPH) program and the petition under 37 CFR 1.102(a), filed 25 February 2011, to make the above-identified application special.

The request and petition are **GRANTED**.

Discussion

A grantable request to participate in the PPH program and petition to make special require:

1. The U.S. application is

    a. a Paris Convention application which either
        i. validly claims priority under 35 U.S.C. 119(a) and 37 CFR 1.55 to one or more applications filed in the KIPO, or
        ii. validly claims priority under 35 U.S.C. 119(a)/365(a) to a PCT application that contains no priority claims,

    or

    b. a national stage application under the PCT (an application which entered the national stage in the U.S. from a PCT international application after compliance with 35 U.S.C. 371), which PCT application
        i. validly claims priority under 35 U.S.C. 365(b) to an application filed in the KIPO, or
        ii. validly claims priority under 35 U.S.C. 365(b) to a PCT application that contains no priority claims, or
        iii. contains no priority claim,

    or

    c. a so-called bypass application filed under 35 U.S.C. 111(a) which validly claims benefit under 35 U.S.C. 120 to a PCT application, which PCT application

i. validly claims priority under 35 U.S.C. 365(b) to an application filed in the KIPO, or
ii. validly claims priority under 35 U.S.C. 365(b) to a PCT application that contains no priority claims, or
iii. contains no priority claim;

2. Applicant must submit a copy of:
   a. The allowable/patentable claim(s) from the KR application(s);
   b. An English translation of the allowable/patentable claim(s), and
   c. A statement that the English translation is accurate (if the claims were published in a language other than English);
3. Applicant must:
   a. Ensure that all the claims in the U.S. application must sufficiently correspond or be amended to sufficiently correspond to the allowable/patentable claim(s) in the KR application(s), and
   b. Submit a claims correspondence table in English;
4. Examination of the U.S. application has not begun;
5. Applicant must submit:
   a. A copy of all the office actions (which are relevant to patentability), excluding "Decision to Grant a Patent" from each of the KR application(s) containing the allowable/patentable claim(s);
   b. An English language translation of the KIPO office action; and
   c. A statement that the English translation is accurate (if the office actions are not in the English language);
6. Applicant must submit:
   a. An IDS listing the documents cited by the KIPO examiner in the KIPO office action (unless already filed in this application); and
   b. Copies of all the documents cited in the KIPO office action, except U.S. patents or U.S. patent application publications (unless already filed in this application);

The request to participate in the PPH program and petition comply with the above requirements. Accordingly, the above-identified application has been accorded "special" status.

Any response must be submitted via EFS-Web.

Telephone inquiries concerning this decision should be directed to Lee W. Young at 571-272-4549.

All other inquiries concerning the examination or status of the application is accessible in the PAIR system at http://uspto.gov/ebc/index.html.

Lee W. Young
TQAS
Technology Center 2800

UNITED STATES PATENT AND TRADEMARK OFFICE

Commissioner for Patents
United States Patent and Trademark Office
P.O. Box 1450
Alexandria, VA 22313-1450
www.uspto.gov

HAYNES AND BOONE, LLP
IP SECTION
2323 VICTORY AVENUE
SUITE 700
DALLAS TX 75219

MAILED

AUG 05 2010

OFFICE OF PETITIONS

In re Application of	:	
Ge, Zhenzhou	:	DECISION ON PETITION
Application No. 12/618,531	:	TO WITHDRAW
Filed: November 13, 2009	:	FROM RECORD
Attorney Docket No. 43787.2	:	

This is a decision on the Request to Withdraw as attorney or agent of record under 37 C.F.R. § 1.36(b), filed July 6, 2010.

The request is **NOT APPROVED**.

The Request for Withdrawal as Attorney or Agent and Change of Correspondence Address is hereby not accepted. Petitioner has not complied with current USPTO requirements, as set forth in 37 CFR 10.40 concerning Request for Withdrawal as Attorney and Change of Correspondence Address. Specifically, pursuant to 37 CFR 10.40, the Office will require the practitioner(s) to certify that he, she or they have:

> (1) given reasonable notice to the client, prior to the expiration of the reply period, that the practitioner(s) intends to withdraw from employment;
>
> (2) delivered to the client or a duly authorized representative of the client all papers and property (including funds) to which the client is entitled; and
>
> (3) notified the client of any replies that may be due and the time frame within which the client must respond.

Petitioner has not complied with the above certifications. If the practitioner cannot make all of the certifications, an explanation detailing why the certification cannot be made must be included with the Request.

Telephone inquires concerning this decision should be directed to the undersigned at (571) 272-3206. All other inquires concerning either the examination or status of the application should be directed to the Technology Center.

Liana Walsh
Petitions Examiner
Office of Petitions

Doc Code: PET.GREEN
Document Description: Petition for Green Tech Pilot

PTO/SB/420 (05-10)
Approved for use through 01/31/2011. OMB 0651-0062
U.S. Patent and Trademark Office; U. S. DEPARTMENT OF COMMERCE
Under the Paperwork Reduction Act of 1995, no persons are required to respond to a collection of information unless it displays a valid OMB control number.

PETITION TO MAKE SPECIAL UNDER THE GREEN TECHNOLOGY PILOT PROGRAM

Attorney Docket Number: 3245.001US1	Application Number (if known): 12/618,577	Filing date: November 13, 2009

First Named Inventor: Fritz Kirscht

Title: METHOD AND SYSTEM FOR CONTROLLING RESISTIVITY IN INGOTS MADE OF COMPENSATED FEEDSTOCK SILICON

APPLICANT HEREBY REQUESTS TO PARTICIPATE IN THE GREEN TECHNOLOGY PILOT PROGRAM FOR THE ABOVE-IDENTIFIED APPLICATION. See Instruction Sheet on page 2.

This petition must be timely filed electronically using the USPTO electronic filing system, EFS-Web.

1. By filing this petition:

   Applicant is requesting early publication: Applicant hereby requests early publication under 37 CFR 1.219 and the publication fee set forth in 37 CFR 1.18(d) accompanies this request.

2. By filing this petition: applicant is agreeing to make an election without traverse in a telephonic interview and elect an invention that meets the eligibility requirements set forth in the notice titled "Pilot Program for Green Technologies Including Greenhouse Gas Reduction," as modified by the notice titled "Elimination of Classification Requirement in the Green Technology Pilot Program," each of which was published in the Federal Register, if the Office determines that the claims are not obviously directed to a single invention.

3. This request is accompanied by statements of special status for the eligibility requirement.

4. The application contains no more than three (3) independent claims and twenty (20) total claims.

5. The application does not contain any multiple dependent claims.

6. Other attachments: Transmittal (1 pg); Communication (5 pgs.); Request for Early Publication (1 pg.)

Signature	Date 8-13-2010
Name (Print/Typed) Nicholas P. Lanzatella	Registration Number 63,803

Note: *Signatures of all the inventors or assignees of record of the entire interest or their representative(s) are required in accordance with 37 CFR 1.33 and 11.18. Please see 37 CFR 1.4(d) for the form of the signature. If necessary, submit multiple forms for more than one signature, see below*.*

☐ *Total of 3 forms are submitted.

The information is required to obtain or retain a benefit by the public which is to file (and by the USPTO to process) an application. Confidentiality is governed by 35 U.S.C. 122 and 37 CFR 1.11 and 1.14. This collection is estimated to take 1 hour to complete, including gathering, preparing, and submitting the completed application form to the USPTO. Time will vary depending upon the individual case. Any comments on the amount of time you require to complete this form and/or suggestions for reducing this burden, should be sent to the Chief Information Officer, U.S. Patent and Trademark Office, U.S. Department of Commerce, P.O. Box 1450, Alexandria, VA 22313-1450. DO NOT SEND FEES OR COMPLETED FORMS TO THIS ADDRESS. **SEND TO: Commissioner for Patents, P.O. Box 1450, Alexandria, VA 22313-1450.**

If you need assistance in completing the form, call 1-800-PTO-9199 and select option 2.

IN THE UNITED STATES PATENT AND TRADEMARK OFFICE

Applicant:	Fritz Kirscht et al.	Examiner: Haidung D. Nguyen
Serial No.:	12/618,577	Group Art Unit: 1796
Filed:	November 13, 2009	Docket: 3245.001US1
Title:	METHOD AND SYSTEM FOR CONTROLLING RESISTIVITY IN INGOTS MADE OF COMPENSATED FEEDSTOCK SILICON	

COMMUNICATION

Commissioner for Patents
P.O. Box 1450
Alexandria, VA 22313-1450

Pursuant to the Pilot Program for Green Technologies Including Greenhouse Gas Reduction, 74 Federal Register 64666 (Dec. 8, 2009), and the Elimination of Classification Requirement in the Green Technology Pilot Program, 75 Federal Register 28554 (May 21, 2010) Applicant submits the following:

(1) Applicant respectfully requests grant of special status because the invention materially contributes to development of renewable energy resources or energy conservation. It is believed that it is clear on its face that the invention contributes to the development of renewable energy resources or energy conservation, because the invention relates to a method and system for controlling resistivity in the formation of p-type silicon ingots, that permits the use of low-grade silicon feedstock for fabricating silicon that can be used in the manufacturing of solar cells. Making silicon of the required high purity for solar cells is a problem that has become the single largest bottleneck to large-scale efficient and economical solar cell production. By allowing the use of lower grade silicon feedstock for the manufacturing of solar cells, the bottleneck is effectively circumvented, allowing more economical solar cell production.

Solar energy is included in a conventional definition of "renewable energy resources", see http://en.wikipedia.org/wiki/Renewable_energy. By adopting solar cells as a source of energy, energy is derived from solar energy rather than from other non-renewable energy resources, principally such as coal or petrochemical sources. By making solar cells more economically, they will cost less, and as a result more people will use them; therefore, the present invention can provide a way for society to use less non-renewable resources, the encouragement of which is clearly a principal objective of the Pilot Program.

The Pilot Program notice at page 64668, first column, first partial paragraph, lines 16-23, states that an Applicant for the program is not permitted to "enjoy the benefit of advanced examination merely because some minor aspect of the claimed invention may be directed to (1) development of renewable energy or energy conservation...". Additionally, the Pilot Program notice at page 64668, first column, first partial paragraph, lines 9-15, states that when applying for the program, it is not allowed for the Applicant to "speculate as to how a hypothetical end-user might specially apply the invention in a manner that could materially contribute to (1) development of renewable energy or energy conservation...". However, it is not a minor aspect of the present invention that is directed to the development of renewable energy or energy conservation, nor is speculation as to an end-user's special application of the invention necessary. Attention is direction to the first paragraph of the Detailed Description, paragraph [029], emphasis added:

> [029] The method and system of the present disclosure provide a semiconductor ingot formation process for producing a multi-crystalline silicon ingot. As a result of using the disclosed subject matter, an improvement in the properties of low-grade semiconductor materials, such as upgraded, partially purified metallurgical silicon occurs. Such improvement allows, for example, the use of UMG-Si [(upgraded metallurgical grade silicon)] *in producing solar cells as may be used in solar power generation and related uses.* The method and system of the present disclosure, moreover, *particularly benefits the formation of solar cells* using UMG or other non-electronic grade feedstock silicon materials, but can be used for [formation of solar cells using] electronic grade feedstock silicon too.

Additionally, see the first paragraph of the Summary, paragraph [010], emphasis added:

> [010] Techniques are here disclosed for providing a combination of interrelated steps at the ingot formation level *for ultimately making economically viable the fabrication of solar cells on a mass production level*. The present disclosure includes a method and system for forming multi-crystalline silicon ingots, which ingots possess uniformly p-type semiconductor material along essentially all of the ingot axial length. With the disclosed process and system, silicon ingots may be formed directly within a silicon melt crucible. For example, using mc-Si (multi-crystalline silicon). For example, using mc-Si ingots formed from the processes here disclosed, solar wafers and solar cells can be made with improved performance/cost ratio, based on this mc-Si material.

It is clear from the above quoted passages that a major aspect of the present invention is directed to the economical production of solar cells. Moreover, the most preferred embodiments, prominently featured not only throughout the entire application but also in the first paragraphs of the Summary and Detailed Description, are centered directly and unambiguously on the production of solar cells. Thus, speculation as to an end-user's special application of the invention is not necessary to conclude that the invention contributes materially to the development of renewable energy or energy conservation.

(2) The instant application is a non-reissue, non-provisional utility application filed under 35 U.S.C. 111(a). The application was filed on November 13, 2009 and was thus filed before the publication date of 74 Federal Register 64666 (Dec. 8, 2009).

(3) The application contains three or fewer independent claims and twenty or fewer total claims.

(4) The claims are believed to be directed to a single invention that materially enhances the quality of the environment, or that materially contributes to: (1) The discovery or development of renewable energy resources; or (2) the more efficient utilization and conservation of energy resources.

If the USPTO determines that the claims are directed to multiple inventions (e.g., in a restriction requirement), Applicant agrees to make an election without traverse in a telephonic interview, and elect an invention that meets the eligibility requirements in section II or III of the above-identified notice and is classified in one of the U.S. classifications listed in section VI of the above-identified notice.

(5) The petition to make special is filed electronically before December 8, 2010, using the USPTO electronic filing system, EFS–Web, and selecting the document description of "Petition for Green Tech Pilot" on the EFS–Web screen.

(6) The petition to make special is believed to be filed at least one day prior to the date

that a first Office action (which may be an Office action containing only a restriction requirement) appears in the Patent Application Information Retrieval (PAIR) system.

(7) The petition to make special is accompanied by a request for early publication in compliance with 37 CFR 1.219 and the publication fee set forth in 37 CFR 1.18(d).

Accordingly, it is believed the application is in condition to be considered under the pilot program and Applicant respectfully requests that the present application be made special to enjoy expedited consideration.

CONCLUSION

Applicant believes that no fee is required with this communication. If necessary, please charge any additional fees or credit overpayment to Deposit Account 19-0743.

Respectfully submitted,

Fritz Kirscht et al.

By their Representatives,

SCHWEGMAN LUNDBERG & WOESSNER, P.A.
P.O. Box 2938
Minneapolis, MN 55402
612-373-6900

Date August 13th, 2010

By Nicholas P. Lanzatella
Nicholas P. Lanzatella
Reg. No. 63,803

CERTIFICATE UNDER 37 CFR 1.8: The undersigned hereby certifies that this correspondence is being filed using the USPTO's electronic 2010filing system EFS-Web, and is addressed to: Commissioner for Patents, P.O. Box 1450, Alexandria, VA 22313-1450 on this 13th day of August,.

Ryan Saunders
Name

Signature

S/N 12/618,577 **PATENT**

IN THE UNITED STATES PATENT AND TRADEMARK OFFICE

Applicant:	Fritz Kirscht et al.	Examiner: Haidung D. Nguyen
Serial No.:	12/618,577	Group Art Unit: 1796
Filed:	November 13, 2009	Docket: 3245.001US1
Title:	METHOD AND SYSTEM FOR CONTROLLING RESISTIVITY IN INGOTS MADE OF COMPENSATED FEEDSTOCK SILICON	

REQUEST FOR EARLY PUBLICATION UNDER 37 CFR 1.219

Commissioner for Patents
P.O. Box 1450
Alexandria, VA 22313-1450

Applicants hereby request early publication under 37 CFR 1.219 of the above-identified patent application. **Please charge Deposit Account No. 19-0743 in the amount of $300.00 as set forth in 37 CFR 1.18(d).**

Applicant believes the application is in condition for early publication and the Examiner is invited to telephone Applicants' attorney at (612) 349-9580 to facilitate publication of the application.

If necessary, please charge any additional fees or credit overpayment to Deposit Account No. 19-0743.

Respectfully submitted,

SCHWEGMAN, LUNDBERG & WOESSNER, P.A.
P.O. Box 2938
Minneapolis, MN 55402
(612) 349-9580

Date August 13, 2010 By Nicholas P. Lanzatella

Nicholas P. Lanzatella
Reg. No. 63,803

CERTIFICATE UNDER 37 CFR 1.8: The undersigned hereby certifies that this correspondence is being filed using the USPTO's electronic filing system EFS-Web, and is addressed to: Commissioner for Patents, P.O. Box 1450, Alexandria, VA 22313-1450 on this 13th day of August, 2010.

Name Ryan Saunders Signature

UNITED STATES PATENT AND TRADEMARK OFFICE

UNITED STATES DEPARTMENT OF COMMERCE
United States Patent and Trademark Office
Address: COMMISSIONER FOR PATENTS
P.O. Box 1450
Alexandria, Virginia 22313-1450
www.uspto.gov

APPLICATION NO.	FILING DATE	FIRST NAMED INVENTOR	ATTORNEY DOCKET NO.	CONFIRMATION NO.
12/618,577	11/13/2009	Fritz Kirscht	CALI005US1	6931

21186 7590 08/19/2010
SCHWEGMAN, LUNDBERG & WOESSNER, P.A.
P.O. BOX 2938
MINNEAPOLIS, MN 55402

EXAMINER	
NGUYEN, HAIDUNG D	
ART UNIT	PAPER NUMBER
1796	

NOTIFICATION DATE	DELIVERY MODE
08/19/2010	ELECTRONIC

Please find below and/or attached an Office communication concerning this application or proceeding.

The time period for reply, if any, is set in the attached communication.

Notice of the Office communication was sent electronically on above-indicated "Notification Date" to the following e-mail address(es):

uspto@slwip.com
request@slwip.com

UNITED STATES PATENT AND TRADEMARK OFFICE

Commissioner for Patents
United States Patent and Trademark Office
P.O. Box 1450
Alexandria, VA 22313-1450
www.uspto.gov

SCHWEGMAN, LUNDBERG & WOESSNER, P.A.
P.O. BOX 2938
MINNEAPOLIS MN 55402

AUG 19 2010

In re Application of	:	
Kirscht et al.	:	DECISION ON PETITION
Application No. 12/618,577	:	TO MAKE SPECIAL UNDER
Filed: 11/13/2009	:	THE GREEN TECHNOLOGY
Attorney Docket No. **CALI005US1**	:	PILOT PROGRAM

This is a decision on the petition under 37 CFR 1.102, filed 8/13/2010, to make the above-identified application special under the pilot program for applications pertaining to Green Technologies as set forth 74 Federal Register Notice 64666 (December 8, 2009).

The petition is **GRANTED**.

A grantable petition to make an application special under 37 CFR 1.102 and the pilot program as set forth in 74 FR 64666 must be directed to a nonprovisional application filed under 35 USC 111(a) or be a national stage entry under 35 USC 371, exclusive of any reissue applications and be filed prior to the date of the notice, December 8, 2009.

In order to qualify for special status, the following requirements must be met. 1) The application must have no more than 3 independent claims and no more than 20 total claims. 2) The application must not contain any multiple dependent claims. 3) The petition must state the basis for seeking special status, i.e., the claimed invention either: A) materially enhances the quality of the environment or B) materially contributes to: i) the discovery or development of renewable energy resources, ii) the more efficient utilization and conservation of energy resources, or iii) greenhouse gas emission reduction. 4) If the disclosure is not clear on its face that the claimed invention materially contributes under category (A) or (B), the petition must be accompanied by a statement by the applicant, assignee, or an attorney/agent registered to practice before the Office explaining how the materiality standard is met. 5) A statement that applicant will agree to make an election without traverse in a telephonic interview if a restriction requirement is made by the examiner. 6) The petition to make special must be filed electronically. 7) The petition must be filed at least one day prior to the date that a first Office Action appears in the Patent Application Information Retrieval (PAIR) system. 8) The petition must be accompanied by a request for early publication in compliance with 37 CFR 1.219 and include the publication fee as set forth in 37 CFR 1.18(d).

The requirement for a fee for consideration of the petition to make special for applications pertaining to Green Technologies has been waived.

The instant petition complies with items 1 – 8 above. Accordingly, the above-identified application has been accorded "special" status.

Telephone inquires concerning this decision should be directed to Tom Dunn at 571-272-1171.

The application is being forwarded to the Technology Center Art Unit 1796 for action on the merits commensurate with this decision.

/Tom Dunn/

Tom Dunn
Quality Assurance Specialist
Technology Center 1700

UNITED STATES PATENT AND TRADEMARK OFFICE

UNITED STATES DEPARTMENT OF COMMERCE
United States Patent and Trademark Office
Address: COMMISSIONER FOR PATENTS
P.O. Box 1450
Alexandria, Virginia 22313-1450
www.uspto.gov

APPLICATION NO.	FILING DATE	FIRST NAMED INVENTOR	ATTORNEY DOCKET NO.	CONFIRMATION NO.
12/618,604	11/13/2009	Jean-Luc Girardet	18545-719.301	6988

7590 07/06/2011

WILSON, SONSINI, GOODRICH & ROSATI
650 PAGE MILL ROAD
PALO ALTO, CA 94304-1050

EXAMINER	
SHAMEEM, GOLAM M	

ART UNIT	PAPER NUMBER
1622	

MAIL DATE	DELIVERY MODE
07/06/2011	PAPER

DECISION GRANTING PETITION UNDER 37 CFR 1.138(d)

The declaration of express abandonment is recognized

This is in response to the petition under 37 CFR 1.138(d), requesting for a refund of any previously paid search fee and excess claims fee in the above-identified application.

The petition is granted.

The express abandonment is recognized. Any previously paid search fee and excess claims fee are hereby refunded.

Telephone inquiries should be directed to the Office of Data Management at (571) 272-4200.

Nikki James

Patent Publication Branch
Office of Data Management

UNITED STATES PATENT AND TRADEMARK OFFICE

UNITED STATES DEPARTMENT OF COMMERCE
United States Patent and Trademark Office
Address: COMMISSIONER FOR PATENTS
P.O. Box 1450
Alexandria, Virginia 22313-1450
www.uspto.gov

APPLICATION NO.	FILING DATE	FIRST NAMED INVENTOR	ATTORNEY DOCKET NO.	CONFIRMATION NO.
12/618,617	11/13/2009	Tomoko TAGUCHI	SUTOSH.498AUS	7010

7590 08/30/2010
KNOBBE MARTENS OLSON & BEAR LLP
2040 MAIN STREET
FOURTEENTH FLOOR
IRVINE, CA 92614

EXAMINER
NGUYEN, HOA T

ART UNIT	PAPER NUMBER
2627	

NOTIFICATION DATE	DELIVERY MODE
08/30/2010	ELECTRONIC

DECISION GRANTING PETITION UNDER 37 CFR 1.138(d)

The declaration of express abandonment is recognized

This is in response to the petition under 37 CFR 1.138(d), requesting for a refund of any previously paid search fee and excess claims fee in the above-identified application.

The petition is granted.

The express abandonment is recognized. Any previously paid search fee and excess claims fee are hereby refunded.

Telephone inquiries should be directed to the Office of Data Management at (571) 272-4200.

Nioni Farmer

Patent Publication Branch
Office of Data Management

Adjustment date: 08/27/2010 [illegible]
11/16/2009 INTEFSW 00007871 12618617
02 FC:1111 -540.00 CP

FORM PET651G (Rev. 08/07)

UNITED STATES PATENT AND TRADEMARK OFFICE

Commissioner for Patents
United States Patent and Trademark Office
P.O. Box 1450
Alexandria, VA 22313-1450
www.uspto.gov

ROUND
LERNER, DAVID, LITTENBERG, KRUMHOLZ & MENTLIK, LLP
600 SOUTH AVENUE WEST
WESTFIELD NJ 07090

MAILED

DEC 06 2010

OFFICE OF PETITIONS

In re Application of :
James M. Holden et al. :
Application No. 12/618,648 :
Filed: November 13, 2009 :
Attorney Docket No. **ROUND 3.0-124 CIPCOCOCOCO** :

DECISION ON PETITION
TO WITHDRAW
FROM RECORD

This is a decision on the request to withdraw as attorney of record under 37 CFR § 1.36(b), filed November 23, 2010.

The request is **NOT APPROVED**.

The request cannot be approved because it lacks the name of the first inventor or the assignee of record that is associated with the address listed in the request. Therefore, the change of correspondence address is considered improper.

The Office will only accept correspondence address changes to the most current address information provided for the assignee of the entire interest *who properly became of record under 37 CFR 3.71,* or, if no assignee of the entire interest has properly been made of record, the most current address information provided for the first named inventor. 37 CFR 3.71(c) states:

> *An assignee becomes of record either in a national patent application or a reexamination proceeding by filing a statement in compliance with § 3.73(b) that is signed by a party who is authorized to act on behalf of the assignee.*

The assignee must establish its ownership of the patent to the satisfaction of the Director. In this regard, the statement under 37 CFR 3.73(b) must have either: (i) documentary evidence of a chain of title from the original owner to the assignee (*e.g.*, copy of an executed assignment), and a statement affirming that the documentary evidence of the chain of title from the original owner to the assignee was or concurrently is being submitted for recordation pursuant to § 3.11; or (ii) a statement specifying where documentary evidence of a chain of title from the original owner to the assignee is recorded in the assignment records of the Office (*e.g.*, reel and frame number).

All future communications from the Office will continue to be directed to the above-listed address until otherwise notified by applicant.

Telephone inquires concerning this decision should be directed to the undersigned at (571) 272-4584.

/JoAnne Burke/
JoAnne Burke
Petitions Examiner
Office of Petitions

UNITED STATES PATENT AND TRADEMARK OFFICE

Commissioner for Patents
United States Patent and Trademark Office
P.O. Box 1450
Alexandria, VA 22313-1450
www.uspto.gov

ROUND
LERNER, DAVID, LITTENBERG, KRUMHOLZ & MENTLIK, LLP
600 SOUTH AVENUE WEST
WESTFIELD, NJ 07090

MAILED

JAN 03 2011

OFFICE OF PETITIONS

In re Application of :
James M. Holden et al. :
Application No. 12/618,648 : DECISION ON PETITION
Filed: November 13, 2009 : TO WITHDRAW
Attorney Docket No. **ROUND 3.0-124** : FROM RECORD
CIPCOCOCOCO :

This is a decision on the Request to Withdraw as attorney or agent of record under 37 CFR § 1.36(b), filed December 10, 2010.

The request is **NOT APPROVED** as moot.

A review of the file record indicates that the power of attorney to attorneys/agents associated with Customer Number 58907 has been revoked by the applicants of the patent application on December 10, 2010. Accordingly, the request to withdraw under 37 CFR § 1.36(b) is moot.

All future communications from the Office will continue to be directed to the below-listed address until otherwise notified by applicant.

Telephone inquires concerning this decision should be directed to the undersigned at 571-272-4584.

/JoAnne Burke/
JoAnne Burke
Petitions Examiner
Office of Petitions

cc: GAZDZINSKI & ASSOCIATES, PC
16644 WEST BERNARDO DRIVE
SUITE 201
SAN DIEGO CA 92127

Doc Code: PET.GREEN
Document Description: Petition for Green Tech Pilot

PTO/SB/420 (05-10)
Approved for use through 05/31/2010. OMB 0651-0062
U.S. Patent and Trademark Office; U. S. DEPARTMENT OF COMMERCE
Under the Paperwork Reduction Act of 1995, no persons are required to respond to a collection of information unless it displays a valid OMB control number.

PETITION TO MAKE SPECIAL UNDER THE GREEN TECHNOLOGY PILOT PROGRAM

Attorney Docket Number: 3K02.1-012 A	Application Number (if known): 12/618,697	Filing date: November 13, 2009

First Named Inventor: KONG, Stephen Poh Chew

Title: SYSTEM AND METHOD OF DEMOCRATIZING POWER TO CREATE A META-EXCHANGE

APPLICANT HEREBY REQUESTS TO PARTICIPATE IN THE GREEN TECHNOLOGY PILOT PROGRAM FOR THE ABOVE-IDENTIFIED APPLICATION. **See Instruction Sheet on page 2.**

This petition must be timely filed electronically using the USPTO electronic filing system, EFS-Web.

1. By filing this petition:

   Applicant is requesting early publication: Applicant hereby requests early publication under 37 CFR 1.219 and the publication fee set forth in 37 CFR 1.18(d) accompanies this request.

2. By filing this petition: applicant is agreeing to make an election without traverse in a telephonic interview and elect an invention that meets the eligibility requirements set forth in the notice titled "Pilot Program for Green Technologies Including Greenhouse Gas Reduction," as modified by the notice titled "Elimination of Classification Requirement in the Green Technology Pilot Program," each of which was published in the Federal Register, if the Office determines that the claims are not obviously directed to a single invention.

3. This request is accompanied by statements of special status for the eligibility requirement.

4. The application contains no more than three (3) independent claims and twenty (20) total claims.

5. The application does not contain any multiple dependent claims.

6. Other attachments: _____

Signature /Michelle E. Kandcer/	Date October 1, 2010
Name (Print/Typed) Michelle E. Kandcer	Registration Number 54,207

Note: *Signatures of all the inventors or assignees of record of the entire interest or their representative(s) are required in accordance with 37 CFR 1.33 and 11.18. Please see 37 CFR 1.4(d) for the form of the signature. If necessary, submit multiple forms for more than one signature, see below*.*

☑ *Total of 1 forms are submitted.

The information is required to obtain or retain a benefit by the public which is to file (and by the USPTO to process) an application. Confidentiality is governed by 35 U.S.C. 122 and 37 CFR 1.11 and 1.14. This collection is estimated to take 12 hours to complete, including gathering, preparing, and submitting the completed application form to the USPTO. Time will vary depending upon the individual case. Any comments on the amount of time you require to complete this form and/or suggestions for reducing this burden, should be sent to the Chief Information Officer, U.S. Patent and Trademark Office, U.S. Department of Commerce, P.O. Box 1450, Alexandria, VA 22313-1450. DO NOT SEND FEES OR COMPLETED FORMS TO THIS ADDRESS. **SEND TO: Commissioner for Patents, P.O. Box 1450, Alexandria, VA 22313-1450.**

If you need assistance in completing the form, call 1-800-PTO-9199 and select option 2.

PTO/SB/420 (05-10)
Approved for use through 05/31/2010. OMB 0651-0062
U.S. Patent and Trademark Office; U. S. DEPARTMENT OF COMMERCE
Under the Paperwork Reduction Act of 1995, no persons are required to respond to a collection of information unless it displays a valid OMB control number.

Instruction Sheet for
Petition to Make Special Under the Green Technology Pilot Program

(Not to be Submitted to the USPTO)

***The following is a summary of the requirements** (for more information see the notices (i) "Pilot Program for Green Technologies Including Greenhouse Gas Reduction" and (ii) "Elimination of Classification Requirement in the Green Technology Pilot Program," available on the USPTO web site at http://www.uspto.gov/patents/init_events/green_tech.jsp):*

(1) The application must be a non-reissue, non-provisional utility application filed under 35 U.S.C. 111(a), or an international application that has entered the national stage in compliance with 35 U.S.C. 371. The application must be previously filed before the publication date of the notice cited above. Reexamination proceedings are excluded from this pilot program.

(2) The application must contain three or fewer independent claims and twenty or fewer total claims. The application must not contain any multiple dependent claims. For an application that contains more than three independent claims or twenty total claims, or multiple dependent claims, applicant must file a preliminary amendment in compliance with 37 CFR 1.121 to cancel the excess claims and/or the multiple dependent claims at the time the petition to make special is filed.

(3) The claims must be directed to a single invention that materially enhances the quality of the environment, or that materially contributes to: (1) the discovery or development of renewable energy resources; (2) the more efficient utilization and conservation of energy resources; or (3) green house gas emission reduction (see the eligibility requirements of sections II and III of the notice (i) cited above). The petition must include a statement that, if the USPTO determines that the claims are directed to multiple inventions (e.g., in a restriction requirement), applicant will agree to make an election without traverse in a telephonic interview, and elect an invention that meets the eligibility requirements in section II or III of the notice (i) cited above.

(4) The petition to make special must be timely filed electronically using the USPTO electronic filing system, EFS-Web, and selecting the document description of "Petition for Green Tech Pilot" on the EFS-Web screen. Applicant should use form PTO/SB/420, which is available as a Portable Document Format (PDF) fillable form in EFS-Web and on the USPTO Web site.

(5) The petition to make special must be filed at least one day prior to the date that a first Office action (which may be an Office action containing only a restriction requirement) appears in the Patent Application Information Retrieval (PAIR) system. Applicant may check the status of the application using PAIR.

(6) The petition to make special must be accompanied by a request for early publication in compliance with 37 CFR 1.219 and the publication fee set forth in 37 CFR 1.18(d).

Privacy Act Statement

The **Privacy Act of 1974 (P.L. 93-579)** requires that you be given certain information in connection with your submission of the attached form related to a patent application or patent. Accordingly, pursuant to the requirements of the Act, please be advised that: (1) the general authority for the collection of this information is 35 U.S.C. 2(b)(2); (2) furnishing of the information solicited is voluntary; and (3) the principal purpose for which the information is used by the U.S. Patent and Trademark Office is to process and/or examine your submission related to a patent application or patent. If you do not furnish the requested information, the U.S. Patent and Trademark Office may not be able to process and/or examine your submission, which may result in termination of proceedings or abandonment of the application or expiration of the patent.

The information provided by you in this form will be subject to the following routine uses:

1. The information on this form will be treated confidentially to the extent allowed under the Freedom of Information Act (5 U.S.C. 552) and the Privacy Act (5 U.S.C 552a). Records from this system of records may be disclosed to the Department of Justice to determine whether disclosure of these records is required by the Freedom of Information Act.
2. A record from this system of records may be disclosed, as a routine use, in the course of presenting evidence to a court, magistrate, or administrative tribunal, including disclosures to opposing counsel in the course of settlement negotiations.
3. A record in this system of records may be disclosed, as a routine use, to a Member of Congress submitting a request involving an individual, to whom the record pertains, when the individual has requested assistance from the Member with respect to the subject matter of the record.
4. A record in this system of records may be disclosed, as a routine use, to a contractor of the Agency having need for the information in order to perform a contract. Recipients of information shall be required to comply with the requirements of the Privacy Act of 1974, as amended, pursuant to 5 U.S.C. 552a(m).
5. A record related to an International Application filed under the Patent Cooperation Treaty in this system of records may be disclosed, as a routine use, to the International Bureau of the World Intellectual Property Organization, pursuant to the Patent Cooperation Treaty.
6. A record in this system of records may be disclosed, as a routine use, to another federal agency for purposes of National Security review (35 U.S.C. 181) and for review pursuant to the Atomic Energy Act (42 U.S.C. 218(c)).
7. A record from this system of records may be disclosed, as a routine use, to the Administrator, General Services, or his/her designee, during an inspection of records conducted by GSA as part of that agency's responsibility to recommend improvements in records management practices and programs, under authority of 44 U.S.C. 2904 and 2906. Such disclosure shall be made in accordance with the GSA regulations governing inspection of records for this purpose, and any other relevant (*i.e.*, GSA or Commerce) directive. Such disclosure shall not be used to make determinations about individuals.
8. A record from this system of records may be disclosed, as a routine use, to the public after either publication of the application pursuant to 35 U.S.C. 122(b) or issuance of a patent pursuant to 35 U.S.C. 151. Further, a record may be disclosed, subject to the limitations of 37 CFR 1.14, as a routine use, to the public if the record was filed in an application which became abandoned or in which the proceedings were terminated and which application is referenced by either a published application, an application open to public inspection or an issued patent.
9. A record from this system of records may be disclosed, as a routine use, to a Federal, State, or local law enforcement agency, if the USPTO becomes aware of a violation or potential violation of law or regulation.

UNITED STATES PATENT AND TRADEMARK OFFICE

UNITED STATES DEPARTMENT OF COMMERCE
United States Patent and Trademark Office
Address: COMMISSIONER FOR PATENTS
P.O. Box 1450
Alexandria, Virginia 22313-1450
www.uspto.gov

APPLICATION NO.	FILING DATE	FIRST NAMED INVENTOR	ATTORNEY DOCKET NO.	CONFIRMATION NO.
12/618,697	11/13/2009	Stephen Poh Chew KONG	3K02.1-012 A	7184

23506 7590 10/20/2010

GARDNER GROFF GREENWALD & VILLANUEVA. PC
2018 POWERS FERRY ROAD
SUITE 800
ATLANTA, GA 30339

EXAMINER	
ART UNIT	PAPER NUMBER
2121	

NOTIFICATION DATE	DELIVERY MODE
10/20/2010	ELECTRONIC

Please find below and/or attached an Office communication concerning this application or proceeding.

The time period for reply, if any, is set in the attached communication.

Notice of the Office communication was sent electronically on above-indicated "Notification Date" to the following e-mail address(es):

patent@gardnergroff.com
mkandcer@gardnergroff.com

UNITED STATES PATENT AND TRADEMARK OFFICE

Commissioner for Patents
United States Patent and Trademark Office
P.O. Box 1450
Alexandria, VA 22313-1450
www.uspto.gov

GARDNER GROFF GREENWALD & VILLANUEVA PC
2018 Powers Ferry Road
Suite 800
Atlanta GA 30339

In re Application of :
KONG, Stephen :
Application No. 12/618,697 :
Filed: November 13, 2009 :
For: **DISTRIBUTED GRID-INTERACTIVE PHOTOVOLTAIC-BASED POWER DISPATCHING** :

DECISION ON PETITION TO MAKE SPECIAL UNDER THE GREEN TECHNOLOGY PILOT PROGRAM

This is a decision on the petition under 37 CFR 1.102, filed October 1, 2010, to make the above-identified application special under the pilot program for applications pertaining to Green Technologies as set forth 74 Federal Register Notice 64666 (December 8, 2009).

The petition is **DISMISSED**.

If reconsideration of this decision is desired, a petition for reconsideration must be filed within ONE (1) MONTH OR THIRTY (30) DAYS from the mail date of this decision, whichever is longer. No extension of this time limit can be granted under 37 CFR 1.136(a) or (b). The petition for reconsideration should include an exhaustive attempt to provide the lacking item(s) noted below, since, after a decision on the petition for reconsideration, no further reconsideration or review of the matter will be undertaken by the Director.

A grantable petition to make an application special under 37 CFR 1.102 and the pilot program as set forth in 74 FR 64666 must be directed to a nonprovisional application filed under 35 USC 111(a) or be a national stage entry under 35 USC 371, exclusive of any reissue applications and be filed prior to the date of the notice, December 8, 2009.

In order to qualify for special status, the following requirements must be met. 1) The application must have no more than 3 independent claims and no more than 20 total claims. 2) The application must not contain any multiple dependent claims. 3) The petition must state the basis for seeking special status, i.e., the claimed invention either: A) materially enhances the quality of the environment or B) materially contributes to: i) the discovery or development of renewable energy resources, ii) the more efficient utilization and conservation of energy resources, or iii) greenhouse gas emission reduction. 4) If the disclosure is not clear on its face that the claimed invention materially contributes under category (A) or (B), the petition must be accompanied by a statement by the applicant, assignee, or an attorney/agent registered to practice before the

Office explaining how the materiality standard is met. 5) A statement that applicant will agree to make an election without traverse in a telephonic interview if a restriction requirement is made by the examiner. 6) The petition to make special must be filed electronically. 7) The petition must be filed at least one day prior to the date that a first Office Action appears in the Patent Application Information Retrieval (PAIR) system. 8) The petition must be accompanied by a request for early publication in compliance with 37 CFR 1.219 and include the publication fee as set forth in 37 CFR 1.18(d).

The requirement for a fee for consideration of the petition to make special for applications pertaining to Green Technologies has been waived.

The petition lacks item(s) 4 above for the reasons explained in more detail below.

In regard to item 4, petitioner should note that the instant petition includes a statement identifying the basis for the special status (i.e., whether the instant invention (1) materially enhances the quality of the environment or materially contributes to (2) development of renewable energy resources or energy conservation, or (3) greenhouse gas reduction) as required by sections II and III of the notice. However, as stated in the notice, applicant must also provide a statement pertaining to the materiality standard if the application disclosure is not clear on its face as to the materiality of the basis for the special status of the invention. This petition lacks such a statement and it is not agreed that the application on its face meets that materiality standard.

Any reconsideration of this decision should be submitted through the USPTO electronic filing system, EFS-Web, and selecting the document description of "Petition for Green Tech Pilot" on the EFS-Web screen.

Any inquiry regarding this decision should be directed to Eddie C. Lee at (571) 272-1732.

/Eddie C. Lee/

Eddie C. Lee
Quality Assurance Specialist, TC 2100

IN THE UNITED STATES PATENT AND TRADEMARK OFFICE

In re Application of: KONG, Stephen Poh Chew	
Serial No.: 12/618,697	Confirmation No.: 7184
Filed: November 13, 2009	Group Art Unit: 2121
For: SYSTEM AND METHOD OF DEMOCRATIZING POWER TO CREATE A META-EXCHANGE	Examiner: Unassigned

Commissioner for Patents
P.O. Box 1450
Alexandria, VA 22313-1450

November 22, 2010
Filed Electronically

PETITION FOR RECONSIDERATION OF THE PETITION TO MAKE SPECIAL UNDER THE GREEN TECHNOLOGY PILOT PROGRAM

Sir:

Applicant hereby petitions for reconsideration of its Petition to Make Special Under the Green Technology Pilot Program filed on October 1, 2010. According to the Office's decision dismissing Applicant's petition on October 20, 2010, the Applicant's original Petition to Make Special lacked a statement detailing how the materiality standard is met. Applicant hereby submits a more detailed statement detailing how the materiality standard is met. Specifically, Applicant provides a statement describing how the presently claimed invention materially contributes to the more efficient utilization and conservation of energy resources. Applicant believes that the remaining seven requirements have been satisfied through its Petition to Make Special Under the Green Technology Pilot Program filed on October 1, 2010 (and incorporated by reference herein). Applicant believes this submission is timely, as this response is filed within one month of the date of the Decision on the Petition (as November 20, 2010 was a Saturday and this Petition for Reconsideration is filed on the next business day). No fee is believed to be due. However,

the Commissioner is authorized to charge any additional fees due or credit any overpayment to Deposit Account 50-1513.

Applicant further notes that the "Decision on the Petition to Make Special Under the Green Technology Pilot Program" included an incorrect title (for what appears to be some other unrelated application).

Applicant believes that all requirements are now met to qualify for special status under this pilot program and requests entry into the Pilot Program.

Respectfully submitted,

GARDNER GROFF GREENWALD
& VILLANUEVA, P.C.

/Michelle E. Kandcer/
Michelle E. Kandcer, Reg. No. 54,207

GARDNER GROFF GREENWALD
& VILLANUEVA, P.C.
Customer No. 23506
Tel: 770.984.2300
Fax: 770.984.0098

IN THE UNITED STATES PATENT AND TRADEMARK OFFICE

In re Application of: KONG, Stephen Poh Chew	)	Confirmation No.: 7184
Serial No.: 12/618,697	)	Group Art Unit: 2121
Filed: November 13, 2009	)	Examiner: Unassigned
For: SYSTEM AND METHOD OF DEMOCRATIZING POWER TO CREATE A META-EXCHANGE	)	

STATEMENT OF SPECIAL STATUS FOR THE ELIGIBILITY REQUIREMENT FOR THE PETITION TO MAKE SPECIAL UNDER THE GREEN TECHNOLOGY PILOT PROGRAM

Sir:

The claimed subject matter materially contributes to the more efficient utilization and conservation of energy resources by, for example, allowing users to tailor their generation and consumption of energy resources directly to their own load (e.g., thereby reducing consumption of energy resources), and being able to utilize renewable energy devices for supplemental or backup power.

As explained in Applicant's patent application on pages 6-7, paragraph 0036:

> The present invention avoids fault tolerance by democratizing power generation, thereby allowing individual customers to generate power onsite using whatever generation method they find appropriate and aggregating this power to reduce the load of the power grid during peak periods. This hybrid or recombinant technique can also allow individual users (or a community of users) to tailor their generation and consumption directly to their own load (i.e., Grid-tie), making them independent from grid power failures. By enabling "democratized" distributed generation, resources such as residential solar panels, modular stationary power systems, and small wind and plug in hybrid electrical vehicles, the present invention provides and encourages users (such as those owning individual homes and businesses) to "farm energy" and sell power to their neighbors or back to the grid through a meta-exchange in

exchange for a profit. Similarly, larger commercial businesses that have existing renewable or back-up power systems can similarly farm energy and provide power to others. During peak demand times (such as in the summer months when air condition units place a strain on the grid), users selling power can be paid a higher price for that power (i.e., dynamic rate management or "Real Time Pricing (RTP)"). Additionally, the present invention allows its user to determine the amount of load shedding during particular periods of time.

These features of more efficiently utilizing and conserving energy resources are claimed. For example, claims 17-19 claim an automated system of democratizing power comprising "a module for receiving a plurality of user preferences concerning load shedding using a graphical user interface; and a module for implementing the user preferences during a grid irregularity according to each user's subscription plan," while independent claim 20 provides a method of democratizing power in a power grid system. Claim 18 further states that the plurality of user preferences further includes which power consuming devices can be shut off and for how long, thereby conserving energy resources.

Claims 1-16 recite a method of providing democratized power, comprising "determining if a device needs a transfer of energy; determining if an electric network connected to the device is able to supply supplemental power; determining the quantity of the backup power; determining the cost of the backup power; providing a graphical user interface that provides a visual representation of the quantity and the cost of the backup power to a user; and facilitating payment of the cost of the backup power." This supplemental or backup power is power that can be farmed by other users and provided to the grid. By allowing users to farm energy and sell that farmed energy to other users, all users of the system can conserve energy resources by using only what they need. Moreover, this supplemental or backup power can be generated from green energy sources, such as electric vehicles (as claimed in claim 8) or from an energy farm (as recited in claim 16) such as those energy farms harvesting solar energy (see, e.g., paragraphs 0048 on page 11 of the present application).

Additionally, the present claims recite the how carbon credits are tracked. Claim 3 recites that the database for storing the cost and quantity of supplemental power is updated to reflect carbon credits for the device. Claim 12 further recites that "the graphical user

interface provides a visual representation of an amount of carbon credits a user has currently," while claim 13 recites that "the graphical user interface provides a visual representation of a cost of carbon credits." The presently claimed system encourages the use of carbon credits, thereby leading to conservation of energy resources.

Claim 14 further encourages more efficient utilization and conservation of energy resources by providing a visual representation in the graphical user interface for a user to adjust individual power consuming devices. This allows the user to further reduce his power consumption, thereby conserving energy resources. Claim 15 provides the user the ability to adjust the individual power consuming devices by providing off/on timings. In other words, the user can preset what devices to be shut off when and for long. As described on page 37, paragraph 0171 of the present application:

> The preferences can include which devices can be shut off and for how long. For example, the user may select options in a pull-down menu that set preferences as follows: turn air conditioner off for no more than 8 hours, turn refrigerator off for no more than 2 hours, etc. Thus, in the event of an emergency, the meta-exchange sends a signal to power down one or more user devices (as predetermined and stored in the user preferences) and then sends a subsequent signal after the predetermined duration has lapsed so as to activate the powered off device(s). If for some reason, the system does not send the subsequent signal, then the system can be penalized, such as in the form of paying fees to the user(s) or a premium for the power consumed. The preferences and manner of inputting such preferences (i.e., one or more pull-down menus) illustrated herein are merely examples, and all other appropriate preferences manners of input are within the scope of this invention. Thus, the system is a democratic system with the system/grid and members on "equal footing."

Claim 17 further includes the feature of a module for receiving a plurality of user preferences concerning load shedding using a graphical user interface. In other words, the present invention allows its user to determine the amount of load shedding during particular periods of time. Thus, the system allows users to consume the minimum required power they need (such as for food refrigeration or home cooling), but also allows the users to conserve energy resources by not running the equipment all of the time. Otherwise, energy resources would be wasted by the devices consuming more than the minimum required

power.

As discussed herein, the presently claimed invention materially contributes to the more efficient utilization and conservation of energy resources by providing systems and methods for allowing users to reduce energy consumption. Moreover, the systems and methods of the present invention can be used to mitigate blackouts, thereby conserving energy resources that are wasted upon start-up of the grid (after a blackout situation). Accordingly, Applicant submits that this application qualifies for special status under the Green Technology Pilot Program and respectfully requests that the Office grant the Petition to Make Special.

Respectfully submitted,

GARDNER GROFF GREENWALD
& VILLANUEVA, P.C.

/Michelle E. Kandcer/
Michelle E. Kandcer, Reg. No. 54,207

GARDNER GROFF GREENWALD
& VILLANUEVA, P.C.
Customer No. 23506
Tel: 770.984.2300
Fax: 770.984.0098

UNITED STATES PATENT AND TRADEMARK OFFICE

UNITED STATES DEPARTMENT OF COMMERCE
United States Patent and Trademark Office
Address: COMMISSIONER FOR PATENTS
P.O. Box 1450
Alexandria, Virginia 22313-1450
www.uspto.gov

APPLICATION NO.	FILING DATE	FIRST NAMED INVENTOR	ATTORNEY DOCKET NO.	CONFIRMATION NO.
12/618,697	11/13/2009	Stephen Poh Chew KONG	3K02.1-012 A	7184

23506 7590 12/10/2010

GARDNER GROFF GREENWALD & VILLANUEVA. PC
2018 POWERS FERRY ROAD
SUITE 800
ATLANTA, GA 30339

EXAMINER	
ART UNIT	PAPER NUMBER
2121	

NOTIFICATION DATE	DELIVERY MODE
12/10/2010	ELECTRONIC

Please find below and/or attached an Office communication concerning this application or proceeding.

The time period for reply, if any, is set in the attached communication.

Notice of the Office communication was sent electronically on above-indicated "Notification Date" to the following e-mail address(es):

patent@gardnergroff.com
mkandcer@gardnergroff.com

UNITED STATES PATENT AND TRADEMARK OFFICE

Commissioner for Patents
United States Patent and Trademark Office
P.O. Box 1450
Alexandria, VA 22313-1450
www.uspto.gov

GARDNER GROFF GREENWALD & VILLANUEVA. PC
2018 POWERS FERRY ROAD
SUITE 800
ATLANTA GA 30339

In re Application of :
KONG, Stephen :
Application No. 12/618,697 :
Filed: November 13, 2009 :
For: **SYSTEM AND METHOD OF DEMOCRATIZING POWER TO CREATE A META-EXCHANGE** :

DECISION ON PETITION TO MAKE SPECIAL UNDER THE GREEN TECHNOLOGY PILOT PROGRAM

This is a decision on the renewed petition under 37 CFR 1.102, filed November 22, 2010, to make the above-identified application special under the pilot program for applications pertaining to Green Technologies as set forth in 74 Federal Register Notice 64666 (December 8, 2009) and amended by 75 Federal Register Notice 28554 (May 21, 2010) and 75 Federal Register Notice 69049 (November 10, 2010).

The petition is **GRANTED**.

A grantable petition to make an application special under 37 CFR 1.102 and the pilot program as set forth in 74 FR 64666 must be directed to a nonprovisional application filed under 35 USC 111(a) or be a national stage entry under 35 USC.371, exclusive of any reissue applications.

In order to qualify for special status, the following requirements must be met. 1) The application must have no more than 3 independent claims and no more than 20 total claims. 2) The application must not contain any multiple dependent claims. 3) The petition must state the basis for seeking special status, i.e., the claimed invention either: A) materially enhances the quality of the environment or B) materially contributes to: i) the discovery or development of renewable energy resources, ii) the more efficient utilization and conservation of energy resources, or iii) greenhouse gas emission reduction. 4) If the disclosure is not clear on its face that the claimed invention materially contributes under category (A) or (B), the petition must be accompanied by a statement by the applicant, assignee, or an attorney/agent registered to practice before the Office explaining how the materiality standard is met. 5) A statement that applicant will agree to make an election without traverse in a telephonic interview if a restriction requirement is made by the examiner. 6) The petition to make special must be filed electronically. 7) The petition

must be filed at least one day prior to the date that a first Office Action appears in the Patent Application Information Retrieval (PAIR) system. 8) The petition must be accompanied by a request for early publication in compliance with 37 CFR 1.219 and include the publication fee as set forth in 37 CFR 1.18(d).

The requirement for a fee for consideration of the petition to make special for applications pertaining to Green Technologies has been waived.

The instant petition complies with items 1 – 8 above. Accordingly, the above-identified application has been accorded "special" status.

The application is being forwarded to the Technology Center Art Unit 2121 for action on the merits commensurate with this decision.

Telephone inquires concerning this decision should be directed to Eddie C. Lee at 571-272-1732.

/Eddie C. Lee/

Eddie C. Lee
Quality Assurance Specialist
Technology Center 2100

UNITED STATES PATENT AND TRADEMARK OFFICE

Commissioner for Patents
United States Patent and Trademark Office
P.O. Box 1450
Alexandria, VA 22313-1450
www.uspto.gov

Decision Date : March 25, 2012

In re Application of :

Stephen KONG

Application No : 12618697

Filed : 13-Nov-2009

Attorney Docket No : US136.01

DECISION ON REQUEST TO WITHDRAW AS ATTORNEY/AGENTOF RECORD

This is an electronic decision on the Request to Withdraw as attorney or agent of record under 37 CFR § 1.36(b), filed March 25, 2012

The request is **APPROVED.**

The request was signed by Gordon Thomson (registration no. 55922) on behalf of all attorneys/agents associated with Customer Number 42812 . All attorneys/agents associated with Cusotmer Number 42812 have been withdrawn.

Since there are no remaining attorneys of record, all future communications from the Office will be directed to the first named inventor or assignee that has properly made itself of record pursuant to 37 CFR 3.71, with correspondence address:

Name	Stephen Kong
Name2	ThinkEco Power Inc.
Address 1	Unit 23
Address 2	2660 Westbrook Mall
City	Vancouver
State	
Postal Code	V6T0A5
Country	CA

As a reminder, requester is required to inform the first named inventor or assignee that has properly made itself of record pursuant to 37 CFR 3.71 of the electronically processed petition.

Telephone inquiries concerning this decision should be directed to the Patent Electronic Business Center (EBC) at 866-217-9197.

Office of Petitions

Doc Code: PET.AUTO **Document Description: Petition automatically granted by EFS-Web**	PTO/SB/83 U.S. Patent and Trademark Office Department of Commerce

Electronic Petition Request	**REQUEST FOR WITHDRAWAL AS ATTORNEY OR AGENT AND CHANGE OF CORRESPONDENCE ADDRESS**
Application Number	12618697
Filing Date	13-Nov-2009
First Named Inventor	Stephen KONG
Art Unit	3628
Examiner Name	MICHAEL HARRINGTON
Attorney Docket Number	US136.01
Title	SYSTEM AND METHOD OF DEMOCRATIZING POWER TO CREATE A META-EXCHANGE

◉ Please withdraw me as attorney or agent for the above identified patent application and the practitioners of record associated with Customer Number: 42812

The reason(s) for this request are those described in 37 CFR:

10.40(b)(4)

10.40(c)(1)(iv)

Certifications

☒ I/We have given reasonable notice to the client, prior to the expiration of the response period, that the practitioner(s) intend to withdraw from employment

☒ I/We have delivered to the client or a duly authorized representative of the client all papers and property (including funds) to which the client is entitled

☒ I/We have notified the client of any responses that may be due and the time frame within which the client must respond

Change the correspondence address and direct all future correspondence to the first named inventor or assignee that has properly made itself of record pursuant to 37 CFR 3.71:

Name	Stephen Kong ThinkEco Power Inc.
Address	Unit 23 2660 Westbrook Mall
City	Vancouver
State	
Postal Code	V6T0A5

Country	CA
I am authorized to sign on behalf of myself and all withdrawing practitioners.	
Signature	/Gordon Thomson/
Name	Gordon Thomson
Registration Number	55922

UNITED STATES PATENT AND TRADEMARK OFFICE

Commissioner for Patents
United States Patent and Trademark Office
P.O. Box 1450
Alexandria, VA 22313-1450
www.uspto.gov
DIW Sep-10

THE MACLEAN - FOGG COMPANY,
C/O THE ALDEN LAW GROUP
2122 YORK ROAD, SUITE 180
OAK BROOK IL 60523

MAILED

SEP 17 2010

OFFICE OF PETITIONS

In re Application of :
Henry Bronson :
Application Number: 12/618702 : ON PETITION
Filing Date: 11/13/2009 :
Attorney Docket Number: BR-1 :

This is a decision in reference to the "Petition for Date of Deposit," filed on March 26, 2010, which is treated as a petition requesting that the above-identified application be accorded a filing date of November 13, 2009, with Page 10 of the specification as a part of the original disclosure.

The petition is **dismissed**.

The application was filed on November 13, 2009.

Accordingly, on December 1, 2009, the Office of Patent Application Processing mailed a Notice to File Missing Parts of Nonprovisional Application, stating that the application had been accorded a filing date of November 13, 2009, but that Page 10 of the specification (description and claims) appeared to have been omitted. An executed oath or declaration was also required.

In response, on March 26, 2010, the subject petition was filed, accompanied by an executed declaration. Petitioners assert that Page 10 of the specification was in fact filed on November 13, 2009. Specifically, petitioners "point … out that the image file wrapper maintained within Private PAIR shows '11' pages of specification having been filed on November 13, 2009, a clear indication that page 10 of the specification had been deposited." Further, petitioners provide the affidavit of registered patent practitioner Dana Andrew Alden, who states that he filed the application, including Page 10 of the specification, on November 13, 2009.

Petitioners' argument has been carefully considered, but is not persuasive. In accordance with MPEP 103, the U.S. Patent and Trademark Office (Office) Image File Wrapper (IFW) is the official record of the papers originally filed in this

application. An applicant alleging that a paper was filed in the Office and later misplaced has the burden of proving the allegation by a preponderance of the evidence. Counsel's declaration is not more persuasive than the showing of the official record.

A review of the record reveals that the specification as filed on November 13, 2009, consisted of one cover page, pages numbered 1 through 9 containing text, one blank page, Page 11 containing claims, and Page 12 containing the abstract.

The EFS-Web Legal Framework sets forth the Office policy and procedure for filing applications via the EFS-Web system. The EFS-Web Legal Framework states, in pertinent part, that the Electronic Acknowledgement Receipt establishes the date of receipt by the USPTO of documents submitted via EFS-Web. The electronic documents are itemized in the Electronic Acknowledgement Receipt, which will contain a full listing of the documents submitted to the USPTO as described by the user during the submission process, including the count of pages and/or byte sizes for each document. Thus, the Electronic Acknowledgement Receipt is the electronic equivalent of the postcard receipt described in MPEP § 503. See LEGAL FRAMEWORK FOR EFS-WEB (20MAY 10), Item C.
http://www.uspto.gov/patents/process/file/efs/guidance/New_legal_framework.jsp

It is noted that the Acknowledgement Receipt generated on November 13, 2009, states that 35 pages, identified as the specification, were received. As 35 pages (11 pages of specification including one (1) blank page, 1 page of claims, 1 page of abstract, and 22 sheets of drawings) are located in the file, and no Page 10 is located within those 35 pages, the showing of record is that no Page 10 of the specification was filed on November 13, 2009.

The PDF files that applicants submitted are exactly as seen in the Image File Wrapper (IFW) system. As such, the failure to upload Page 10 of the specification was the result of an error on the part of the applicant, not the Office.

In this regard, applicant, not the Office, is ultimately responsible for the proper and timely filing of his or her application. While the EFS-Web system was designed to assist applicants in avoiding mistakes and omissions in filing applications, the responsibility for filing a complete application remains with the applicant. In other words, it is

the responsibility of the applicant, not the USPTO, to ensure that the required documents are attached and uploaded when filing an application via EFS-Web.

Petitioners may wish to consider filing Page 10 of the specification in a preliminary amendment. If Page 10 is filed as a preliminary amendment, the amendment will be reviewed for new matter by the examiner.

The copies of the application papers filed on March 26, 2010 will be retained in the application file, but will not be processed or examined as a part of the application as filed.

The "Notice" mailed on December 1, 2009, was correct in stating that Page 10 described in the specification appeared to have been omitted. Therefore, the "Notice" was properly mailed and will not be withdrawn.

As the present petition was not necessitated by any error on the part of the Office and the $400.00 petition fee set forth in § 1.17(f) is required and will be charged to counsel's deposit account.

Any request for reconsideration should be filed within **TWO MONTHS** of the date of this decision in order to be considered timely. This time period may not be extended.[1]

Further correspondence with respect to this matter should be addressed as follows:

By mail: Mail Stop Petition
Commissioner for Patents
P.O. Box 1450
Alexandria, VA 22313-1450

By FAX: (571) 273-8300
Attn: Office of Petitions

By hand: Customer Service Window
Mail Stop Petition
Randolph Building
401 Dulany Street
Alexandria, VA 22314

A reply may also be filed using the EFS-Web system.

[1] 37 CFR 1.181(f).

The application is being referred to the Office of Patent Application Processing (OPAP) for further processing with a filing date of November 13, 2009, using only the application papers present on filing.

Telephone inquires should be directed to the undersigned at 571-272-3231.

Douglas I. Wood
Senior Petitions Attorney
Office of Petitions

UNITED STATES PATENT AND TRADEMARK OFFICE

Commissioner for Patents
United States Patent and Trademark Office
P.O. Box 1450
Alexandria, VA 22313-1450
www.uspto.gov

HAZEN PATENT GROUP, LLC
1534 W. ISLANDIA DRIVE
GILLBERT, AZ 85233

MAILED

AUG 17 2010

OFFICE OF PETITIONS

In re Application of

Vladimir Balakin
Application No. 12/618,718
Filed: November 14, 2009
Attorney Docket No. PROT0029

DECISION ON PETITION
TO MAKE SPECIAL UNDER
37 CFR 1.102(c)(1)

This is a decision on the petition under 37 CFR 1.102(c)(1), filed July 15, 2010, to make the above-identified application special based on applicant's age as set forth in M.P.E.P. § 708.02, Section IV.

The petition is **GRANTED**.

A grantable petition to make an application special under 37 CFR 1.102(c)(1) and MPEP § 708.02, Section IV: Applicant's Age must be accompanied by evidence showing that at least one of the applicants is 65 years of age, or more, such as a birth certificate or a statement by applicant. No fee is required

The instant petition includes a statement signed by applicant's representative that he is in possession of proof of applicant's age. Accordingly, the above-identified application has been accorded "special" status.

Telephone inquiries concerning this decision should be directed to undersigned at 571-272-1642.

All other inquiries concerning either the examination or status of the application should be directed to the Technology Center.

The application is being forwarded to the Technology Center Art Unit 2821 for action on the merits commensurate with this decision.

/AMW/
April M. Wise
Petitions Examiner
Office of Petitions

UNITED STATES PATENT AND TRADEMARK OFFICE

Commissioner for Patents
United States Patent and Trademark Office
P.O. Box 1450
Alexandria, VA 22313-1450
www.uspto.gov

HAZEN PATENT GROUP, LLC
1534 W. ISLANDIA DR.
GILLBERT AZ 85233

MAILED

MAY 3 1 2011

OFFICE OF PETITIONS

In re Application of :
Balakin :
Application No. 12/618,718 : DECISION
Filed: 14 November, 2009 :
Attorney Docket No. PROT0029

This is a decision on the petition filed on 12 March, 2011, under 37 C.F.R. §1.27(g)(2) requesting that status as a Small Entity be removed.

NOTE:

In view of their duty of candor to the Office to properly inquire to ascertain the accuracy of representations made before the Office (*see*: 37 C.F.R. §1.4, §10.18, MPEP §410), Petitioners always are reminded of the responsibility to review their records and submit accurate information to the Office.

It does not appear that Petitioner has provided the express schedule of fees/codes, payments made, payments due and differentials, with totals. (*See*: 37 C.F.R. §1.27, §1.28, MPEP §509.02, et seq.) The Office will not attempt to infer Petitioner's specific intents.

If Petitioner's only intent was to Notice the Office of Change of Status, Petitioner is reminded to Notice the Office on payment of the next fees submitted.

As of this writing, Petitioner's submission is **NOT ACCEPTED** in the absence of a specification of the fees/codes, payments made, payments due and differentials, with totals.

Petitioner's request for reconsideration of this decision **must** be submitted within TWO (2) MONTHS from the mail date of this decision. Extensions of time under 37 CFR §1.136(a) are permitted. The reconsideration request should include a cover letter entitled "Renewed Petition under 37 CFR §1.27, §1.28."

This is **not** a final agency action within the meaning of 5 U.S.C. §704.

The availability of applications and application papers online to applicants/practitioners who diligently associate their Customer Number with the respective application(s) now provides an applicant/practitioner on-demand information as to events/transactions in an application.

Out of an abundance of caution, Petitioners always are reminded that that those registered to practice and all others who make representations before the Office **must** inquire into the underlying facts of representations made to the Office and support averments with the appropriate documentation–since all owe to the Office the continuing duty to disclose.[1]

CONCLUSION

The instant petition under 37 C.F.R. §1.27, §1.28 is **dismissed**.

Further correspondence with respect to this matter should be addressed as follows:

By Mail:
Mail Stop PETITION
Commissioner for Patents
P. O. Box 1450
Alexandria, VA 22313-1450

By hand:
U. S. Patent and Trademark Office
Customer Service Window, Mail Stop Petitions
Randolph Building
401 Dulany Street
Alexandria, VA 22314

The centralized facsimile number is **(571) 273-8300.**

The application is released to Technology Center/AU 2881 for further processing in due course.

[1] See supplement of 17 June, 1999. The Patent and Trademark Office is relying on Petitioner's duty of candor and good faith and accepting a statement made by Petitioner. See Changes to Patent Practice and Procedure, 62 Fed. Reg. at 53160 and 53178, 1203 Off. Gaz. Pat. Office at 88 and 103 (responses to comments 64 and 109)(applicant obligated under 37 C.F.R. §10.18 to inquire into the underlying facts and circumstances when providing statements to the Patent and Trademark Office).

Telephone inquiries regarding this decision may be directed to the undersigned at (571) 272-3214—it is noted, however, that all practice before the Office is in writing (see: 37 C.F.R. §1.2[2]) and the proper authority for action on any matter in this regard are the statutes (35 U.S.C.), regulations (37 C.F.R.) and the commentary on policy (MPEP). Therefore, no telephone discussion may be controlling or considered authority for Petitioner's action(s).

/John J. Gillon, Jr./
John J. Gillon, Jr.
Senior Attorney
Office of Petitions

[2] The regulations at 37 C.F.R. §1.2 provide:

§1.2 Business to be transacted in writing.

All business with the Patent and Trademark Office should be transacted in writing. The personal attendance of applicants or their attorneys or agents at the Patent and Trademark Office is unnecessary. The action of the Patent and Trademark Office will be based exclusively on the written record in the Office. No attention will be paid to any alleged oral promise, stipulation, or understanding in relation to which there is disagreement or doubt.

UNITED STATES PATENT AND TRADEMARK OFFICE

Commissioner for Patents
United States Patent and Trademark Office
P.O. Box 1450
Alexandria, VA 22313-1450
www.uspto.gov

MAILED

APR 13 2011

OFFICE OF PETITIONS

STEVEN L. RINEHART
50 W. BROADWAY
SUITE 1200
SALT LAKE CITY, UT 84101

In re Application of :
Lawrence B. Parks :
Application No. 12/618,720 : ON PETITION
Filed: November 14, 2009 :
Attorney Docket No.: None :

This is a decision on the petition, filed February 11, 2011, under the provisions of 37 CFR 1.181 (no fee) requesting withdrawal of the holding of abandonment in the above-identified application.

The petition is **GRANTED**.

This application was held abandoned for failure to timely reply to a to the Notice to File Missing Parts of Nonprovisional Application (Notice), mailed December 1, 2009, which set a two- month period for reply. A Notice of Abandonment was mailed on August 6, 2010.

Petitioner asserts that the Notice dated December 1, 2009 was not received.

A review of the application file reveals no irregularities in the mailing of the Notice of December 1, 2009. Thus, there is a strong presumption that the correspondence was properly mailed to the applicant at the correspondence address of record. In the absence of demonstrated irregularities in mailing of this Notice, petitioner must submit evidence to overcome this presumption. The following showing is required:

> Practitioner must state that the Office action was not received at the correspondence address of record, and that a search of the practitioner's record(s), including any file jacket or the equivalent, and the application contents, indicates that the Office action was not received. A copy of the record(s) used by the practitioner where the non-received Office action would have been entered had it been received is required.
>
> A copy of the practitioner's record(s) required to show non-receipt of the Office action should include the master docket for the firm. That is, if a two month period for reply was set in the nonreceived Office action, a copy of the master docket report showing all replies docketed for a date two months from the mail date of the nonreceived Office action must be submitted as documentary proof of nonreceipt of the Office action. If no

such master docket exists, the practitioner should so state and provide other evidence such as, but not limited to, the following: the application file jacket; incoming mail log; calendar; reminder system; or the individual docket record for the application in question.

Petitioner provides an explanation of his docketing system, stating that it is reliable and that a search of the electronic and physical files showed that the Notice was not received. Petitioner also provides a copy a docket record in the form of a calendar page dated February 1, 2010, which indicates all replies docketed for a date two months from the mail date of the nonreceived Notice. Lastly, petitioner provides a letter dated December 23, 2010 from the Postmaster of the US Postal Service, Kaysville, Utah 84037 indicating that some of the mail for Steven Rinehart was returned by the mail carrier in early 2010.

Petitioner has adequately supported his claim of non-receipt with such evidence.

In view of the above, the Notice of Abandonment is hereby vacated and the holding of abandonment withdrawn.

This application is being referred to the Office of Patent Application Processing (OPAP) for **re-mailing** the Notice of December 1, 2009. The period for reply will run from the mailing date of the Notice.

Telephone inquires related to this decision should be directed to the undersigned at (571) 272-3204. Telephone inquiries related to processing at OPAP should be directed to their hotline at (571) 272-4000.

/SDB/

Sherry D. Brinkley
Petitions Examiner
Office of Petitions

UNITED STATES PATENT AND TRADEMARK OFFICE

Commissioner for Patents
United States Patent and Trademark Office
P.O. Box 1450
Alexandria, VA 22313-1450
www.uspto.gov

JONATHAN GOLDSTEIN
3 HAMARPE STREET,
HAR HOZVIM INDUSTRIAL PARK
JERUSALEM 97774 IL ISRAEL

MAILED

FEB 17 2011

OFFICE OF PETITIONS

In re Application of
Jonathan R. Goldstein, et al.
Application No. 12/618,741
Filed: November 15, 2009
Attorney Docket No.: 106/(1-6)-1

ON PETITION

This is a decision on the petition, filed December 13, 2010, to revive the above-identified application under the provisions of 37 CFR 1.137(b).

The petition is **DISMISSED** because it is not signed in accordance with 37 CFR 1.33(b). The petition is signed by one of the five joint inventors.

37 CFR 1.33(b) states that:

> Amendments and other papers, except for written assertions pursuant to § 1.27(c)(2)(ii) of this part, filed in the application must be signed by:
>
> (1) A registered patent attorney or patent agent of record appointed in compliance with § 1.32(b);
>
> (2) A registered patent attorney or patent agent not of record who acts in a representative capacity under the provisions of § 1.34;
>
> (3) An assignee as provided for under §3.71(b) of this chapter; or
>
> (4) **All of the applicants** (§ 1.41(b)) for patent, unless there is an assignee of the entire interest and such assignee has taken action in the application in accordance with § 3.71 of this chapter. Emphasis added

An unsigned amendment (or other paper) or one not properly signed by a person having authority to prosecute the application is not entered. This applies, for instance, where the amendment (or other paper) is signed by only one of five applicants and the one signing has not been given a power of attorney by the other applicants.

Further, a grantable petition under 37 CFR 1.137(b) must be accompanied by: (1) the required reply, unless previously filed; (2) the petition fee as set forth in 37 CFR 1.17(m); (3) a statement that the entire delay in filing the required reply from the due date for the reply until the filing of a

grantable petition pursuant to 37 CFR 1.137(b) was unintentional; and (4) any terminal disclaimer (and fee as set forth in 37 CFR 1.20(d)) required by 37 CFR 1.137(c). Where there is a question as to whether either the abandonment or the delay in filing a petition under 37 CFR 1.137 was unintentional, the Director may require additional information. See MPEP 711.03(c)(II)(C) and (D).

Therefore, as the petition containing the statement of unintentional delay is not signed by all the inventors and the record herein fails to disclose that petitioner herein (Jonathan R. Goldstein) was ever given a power of attorney to act on behalf of the other inventors, or that he is an assignee of the entire interest and has complied with the provisions of 37 CFR 3.73(b), the petition is considered to not contain a proper statement of unintentional delay.

This decision is made without prejudice to reconsideration. However, any request for reconsideration must be submitted within TWO (2) MONTHS from the mail date of this decision. Extensions of time under 37 CFR 1.136(a) are permitted. The reconsideration request should include a cover letter entitled "Renewed Petition under 37 CFR 1.137(b)" and include a ratification of the unsigned petition.

Further correspondence with respect to this matter should be delivered through one of the following mediums:

By mail:	Mail Stop PETITIONS Commissioner for Patents Post Office Box 1450 Alexandria, VA 22313-1450
By hand:	Customer Service Window Mail Stop Petitions Randolph Building 401 Dulany Street Alexandria, VA 22314
By fax:	(571) 273-8300 ATTN: Office of Petitions
By Internet:	EFS-Web[1]

Any questions concerning this matter may be directed to the undersigned at (571) 272-3204.

/SDB/

Sherry D. Brinkley
Petitions Examiner
Office of Petitions

[1] www.uspto.gov/ebc/efs_help.html (for help using EFS-Web call the Patent Electronic Business Center at (866) 217-9197)

UNITED STATES PATENT AND TRADEMARK OFFICE

Commissioner for Patents
United States Patent and Trademark Office
P.O. Box 1450
Alexandria, VA 22313-1450
www.uspto.gov

JONATHAN GOLDSTEIN
3 HAMARPE STREET,
HAR HOZVIM INDUSTRIAL PARK
JERUSALEM 97774 IL ISRAEL

MAILED

JUN 13 2011

OFFICE OF PETITIONS

In re Application of :
Johnathan R. Goldstein, et al. :
Application No. 12/618,741 : ON PETITION
Filed: November 15, 2009 :
Attorney Docket No.: 106(1-6)-1 :

This is a decision in response to the renewed petition under 37 CFR 1.137(b), filed May 17, 2011, to revive the above-identified application.

The petition is **GRANTED**.

The application became abandoned for a failure to timely respond to a Notice to File Missing Parts (Notice) mailed December 1, 2009. The Notice set a period for reply of two (2) months and required the statutory basic filing fee, the search fee, the examination fee and the surcharge under 37 CFR 1.16(f). A Notice of Abandonment was mailed on August 9, 2010. On December 13, 2010, a petition under the provisions of 37 CFR 1.137(b) was filed; however, the petition was dismissed in a decision mailed February 17, 2011. In response, on May 17, 2011, the present petition was filed.

The pesent petition satisfies the conditions for revival pursuant to the provisions of 37 CFR 1.137(b) in that petitioner has supplied (1) the reply in the form of the $82 filing fee, $270 search fee, $110 examination fee, and $65 surcharge; (2) the petition fee of $810; and (3) an adequate statement of unintentional delay.

The application is being referred to the Office of Patent Application Processing (OPAP) for further pre-examination processing.

Telephone inquires related to this decision should be directed to the undersigned at (571) 272-3204. Telephone inquiries related to processing at OPAP should be directed to their hotline at (571) 272-4000.

/SDB/

Sherry D. Brinkley
Petitions Examiner
Office of Petitions

UNITED STATES PATENT AND TRADEMARK OFFICE

Commissioner for Patents
United States Patent and Trademark Office
P.O. Box 1450
Alexandria, VA 22313-1450
www.uspto.gov

JANICK SIMERAY
58 RUE HENRI BARBUSSE
ARGENTEUIL 95100 FR FRANCE

MAILED

OCT 06 2010

OFFICE OF PETITIONS

In re Application of	:	
Jannick Simeray	:	
Application No. 12/618,775	:	DECISION ON PETITION
Filed: November 15, 2009	:	
Title: Optimised Levitation Device	:	

This is a decision on the petition under the unintentional provisions of 37 CFR 1.137(b), filed July 30, 2010, to revive the above-identified application.

The petition is **GRANTED**.

The above-identified application became abandoned for failure to reply in timely manner to the Notice to File Missing Parts of Nonprovisional Application (Notice) mailed November 30, 2009. The Notice set a period for reply of two (2) months from the mail date of the Notice. No extensions of time under the provisions of 37 CFR 1.136(a) were timely obtained. Accordingly, the above-identified application became abandoned on January 31, 2010.

The petition satisfies the requirements of 37 CFR 1.137(b) in that petitioner has supplied (1) the Oath/Declaration, the $65.00 Surcharge fee, Replacement Drawings, the $82.00 Basic filing fee, the $270.00 Search fee, and the $110.00 Examination fee; (2) the petition fee of $810.00, and (3) a proper statement of unintentional delay.

Additionally, an extension of time under 37 CFR 1.136 must be filed prior to the expiration of the maximum extendable period for reply. *See* In re Application of S., 8 USPQ2d 1630, 1631 (Comm'r Pats. 1988). Since the $1,175.00, five- month extension of time fee submitted with the petition on July 30, 2010 was subsequent to the maximum extendable period for reply, this fee is unnecessary and will be refunded to petitioner's credit card in due course.

Additionally, the address given on the petition differs from the address of record. A courtesy copy of this decision is being mailed to the address given on the petition; however, the Office will mail all future correspondence solely to the address of record.

Telephone inquiries concerning this decision should be directed to the undersigned at (571) 272-7751.

This application is being referred to the Office of Patent Application Processing for further processing in accordance with this decision on petition.

Joan Olszewski
Petitions Examiner
Office of Petitions

cc: Jannick Simeray
Unit 802A, Tower 1
New Mandarin Plaza
TST East, Kowloon, Hong Kong

UNITED STATES PATENT AND TRADEMARK OFFICE

UNITED STATES DEPARTMENT OF COMMERCE
United States Patent and Trademark Office
Address: COMMISSIONER FOR PATENTS
P.O. Box 1450
Alexandria, Virginia 22313-1450
www.uspto.gov

APPLICATION NO.	FILING DATE	FIRST NAMED INVENTOR	ATTORNEY DOCKET NO.	CONFIRMATION NO.
12/618,855	11/16/2009	Akihiro Kosaki	TMCF-11602/08	7531

25006 7590 06/07/2011

GIFFORD, KRASS, SPRINKLE,ANDERSON & CITKOWSKI, P.C
PO BOX 7021
TROY, MI 48007-7021

EXAMINER	
NGUYEN, DANNY	

ART UNIT	PAPER NUMBER
2836	

MAIL DATE	DELIVERY MODE
06/07/2011	PAPER

Please find below and/or attached an Office communication concerning this application or proceeding.

The time period for reply, if any, is set in the attached communication.

UNITED STATES PATENT AND TRADEMARK OFFICE

Commissioner for Patents
United States Patent and Trademark Office
P.O. Box 1450
Alexandria, VA 22313-1450
www.uspto.gov

GIFFORD, KRASS, SPRINKLE,ANDERSON & CITKOWSKI, P.C
PO BOX 7021
TROY MI 48007-7021

In re Application of
KOSAKI et al.
Application No.: 12/618,855
Filed: 16 November 2009
Attorney Docket No.: TMCF-11602/08
For: CONNECTION UNIT AND VEHICLE INCORPORATING THE SAME

: DECISION ON REQUEST TO
: PARTICIPATE IN THE PATENT
: PROSECUTION HIGHWAY
: PROGRAM AND PETITION
: TO MAKE SPECIAL UNDER
: 37 CFR 1.102(a)

This is a decision on the request to participate in the Patent Prosecution Highway (PPH) program and the petition under 37 CFR 1.102(a), filed on 18 May 2011, to make the above-identified application special.

The request and petition are **GRANTED**.

Discussion

A grantable request to participate in the PPH pilot program and petition to make special require:

1. The U.S. application is
    a. a Paris Convention application which either
        i. validly claims priority under 35 U.S.C. 119(a) and 37 CFR 1.55 to one or more applications filed in the JPO, or
        ii. validly claims priority to a PCT application that contains no priority claims, or
    b. a national stage application under the PCT (an application which entered the national stage in the U.S. from a PCT international application after compliance with 35 U.S.C. 371), which PCT application
        i. validly claims priority to an application filed in the JPO, or
        ii. validly claims priority to a PCT application that contains no priority claims, or
        iii. contains no priority claim, or
    c. a so-called bypass application filed under 35 U.S.C. 111(a) which validly claims benefit under 35 U.S.C. 120 to a PCT application, which PCT application
        i. validly claims priority to an application filed in the JPO, or
        ii. validly claims priority to a PCT application that contains no priority claims, or

iii. contains no priority claim;

2. Applicant must submit a copy of:
   a. The allowable/patentable claim(s) from the JPO application(s);
   b. An English translation of the allowable/patentable claim(s) and
   c. A statement that the English translation is accurate;
3. Applicant must:
   a. Ensure all the claims in the U.S. application must sufficiently correspond or be amended to sufficiently correspond to the allowable/patentable claim(s) in the JPO application(s) and
   b. Submit a claims correspondence table in English;
4. Examination of the U.S. application has not begun;
5. Applicant must submit:
   a. Documentation of prior office action:
      i. a copy of the office action(s) just prior to the "Decision to Grant a Patent" from each of the JPO application(s) containing the allowable/patentable claim(s) or
      ii. if the allowable/patentable claims(s) are from a "Notification of Reasons for Refusal" then the Notification of Reasons for Refusal or
      iii. if the JPO application is a first action allowance then no office action from the JPO is necessary should be indicated on the request/petition form;
   b. An English language translation of the JPO Office action from (5)(a)(i)-(ii) above
   c. A statement that the English translation is accurate;
6. Applicant must submit:
   a. An IDS listing the documents cited by the JPO examiner in the JPO office action (unless already submitted in this application)
   b. Copies of the documents except U.S. patents or U.S. patent application publications (unless already submitted in this application);

The request to participate in the PPH pilot program and petition comply with the above requirements. Accordingly, the above-identified application has been accorded "special" status.

Inquiries concerning this decision should be directed to Lee W. Young at 571-272-4549.

All other inquiries concerning the examination or status of the application is accessible in the PAIR system at http://www.uspto.gov/ebc.index.html.

This application will be forwarded to the examiner for action on the merits commensurate with this decision once this application's formality reviews have been completed.

Lee W. Young
TQAS, Technology Center 2800 – Semiconductors
Electrical & Optical Systems & Components

Doc Code: PET.AUTO **Document Description: Petition automatically granted by EFS-Web**	PTO/SB/83 U.S. Patent and Trademark Office Department of Commerce

Electronic Petition Request	**REQUEST FOR WITHDRAWAL AS ATTORNEY OR AGENT AND CHANGE OF CORRESPONDENCE ADDRESS**
Application Number	12618950
Filing Date	16-Nov-2009
First Named Inventor	Mark Klein
Art Unit	3693
Examiner Name	JAMES KRAMER
Attorney Docket Number	IMM006
Title	Determining Relative Effectiveness Of Media Content Items

◉ Please withdraw me as attorney or agent for the above identified patent application and the practitioners of record associated with Customer Number: 48384

The reason(s) for this request are those described in 37 CFR:

10.40(b)(4)

Certifications

☒ I/We have given reasonable notice to the client, prior to the expiration of the response period, that the practitioner(s) intend to withdraw from employment

☒ I/We have delivered to the client or a duly authorized representative of the client all papers and property (including funds) to which the client is entitled

☒ I/We have notified the client of any responses that may be due and the time frame within which the client must respond

Change the correspondence address and direct all future correspondence to the first named inventor or assignee that has properly made itself of record pursuant to 37 CFR 3.71:

Name	Integrated Media Measurement, Inc. c/o Arbitron Inc. Attn: James Derry
Address	9705 Patuxent Woods Drive
City	Columbia
State	MD
Postal Code	21046
Country	US

I am authorized to sign on behalf of myself and all withdrawing practitioners.	
Signature	/Amir H. Raubvogel/
Name	Amir H. Raubvogel
Registration Number	37070

UNITED STATES PATENT AND TRADEMARK OFFICE

Commissioner for Patents
United States Patent and Trademark Office
P.O. Box 1450
Alexandria, VA 22313-1450
www.uspto.gov

Decision Date : August 15,2011

In re Application of :

Mark Klein

Application No : 12618950

Filed : 16-Nov-2009

Attorney Docket No : IMM006

DECISION ON REQUEST TO WITHDRAW AS ATTORNEY/AGENTOF RECORD

This is an electronic decision on the Request to Withdraw as attorney or agent of record under 37 CFR § 1.36(b), filed August 15,2011

The request is **APPROVED.**

The request was signed by Amir H. Raubvogel (registration no. 37070) on behalf of all attorneys/agents associated with Customer Number 48384 . All attorneys/agents associated with Cusotmer Number 48384 have been withdrawn.

Since there are no remaining attorneys of record, all future communications from the Office will be directed to the first named inventor or assignee that has properly made itself of record pursuant to 37 CFR 3.71, with correspondence address:

Name	Integrated Media Measurement, Inc.
Name2	c/o Arbitron Inc. Attn: James Derry
Address 1	9705 Patuxent Woods Drive
Address 2	
City	Columbia
State	MD
Postal Code	21046
Country	US

As a reminder, requester is required to inform the first named inventor or assignee that has properly made itself of record pursuant to 37 CFR 3.71 of the electronically processed petition.

Telephone inquiries concerning this decision should be directed to the Patent Electronic Business Center (EBC) at 866-217-9197.

Office of Petitions

Doc Code: PET.AUTO Document Description: Petition automatically granted by EFS-Web	PTO/SB/64a U.S. Patent and Trademark Office Department of Commerce

Electronic Petition Request	**PETITION FOR REVIVAL OF AN APPLICATION FOR PATENT ABANDONED FOR FAILURE TO NOTIFY THE OFFICE OF A FOREIGN OR INTERNATIONAL FILING UNDER 37 CFR 1.137(f)**
Application Number	12618966
Filing Date	16-Nov-2009
First Named Inventor	Jon Morisey
Art Unit	2423
Examiner Name	ANDREW KOENIG
Attorney Docket Number	MORIJ40986
Title	Method and System for Presenting Customized Content on a Television In Conjunction with Regular Programming

The above-identified application became abandoned pursuant to 35 U.S.C. 122(b)(2)(B)(iii) for failure to timely notify the Office of the filing of an application in a foreign country or under a multinational treaty that requires publication of applications eighteen months after filing. The date of abandonment is the day after the expiration date of the forty-five (45) day period set in 35 U.S.C. 122(b)(2)(B)(iii).

PURSUANT TO 37 CFR 1.137(f), APPLICANT HEREBY PETITIONS FOR REVIVAL OF THIS APPLICATION UNDER 37 CFR 1.137(b).

A grantable petition requires the following items:
(1) Petition fee;
(2) Reply;
(3) Statement that the entire delay was unintentional.

Petition fee
The petition fee under 37CFR 1.17(m) is attached.

☐ Applicant claims SMALL ENTITY status. See 37 CFR 1.27.

☐ Applicant is no longer claiming SMALL ENTITY status. See 37 CFR 1.27(g)(2).

☒ Applicant(s) status remains as SMALL ENTITY.

☐ Applicant(s) status remains as other than SMALL ENTITY.

Notice of Foreign or International Filing (35 U.S.C. 122(b)(2)(B)(iii) and 37 CFR 1.213(c))

☒ Subsequent to the filing of the above-identified application, an application was filed in another country, or under a multinational international treaty (e.g., filed under the Patent Cooperation Treaty), that requries publication of applications eighteen months after the filing. The filing date of the subsequently filed foreign or international application is 11-16-2010

☒ The non-publication request has been filed on 16-Nov-2009

☒ STATEMENT: The entire delay in filing the required notice of a foreign or international filing from the due date for the required notice until the filing of a grantable petition under 37 CFR 1.137(b) was unintentional.
THIS PORTION MUST BE COMPLETED BY THE SIGNATORY OR SIGNATORIES I certify, in accordance with 37 CFR 1.4(d)(4) that I am: ◉ An attorney or agent registered to practice before the Patent and Trademark Office who has been given power of attorney in this application. ◯ An attorney or agent registered to practice before the Patent and Trademark Office, acting in a representative capacity. ◯ A sole inventor ◯ A joint inventor; I certify that I am authorized to sign this submission on behalf of all of the inventors. ◯ A joint inventor; all of whom are signing this e-petition. ◯ The assignee of record of the entire interest that has properly made itself of record pursuant to 37 CFR 3.71.

Signature	/Steven K Martin, Reg No 38542/
Name	Steven K Martin
Registration Number	38542

UNITED STATES PATENT AND TRADEMARK OFFICE

Commissioner for Patents
United States Patent and Trademark Office
P.O. Box 1450
Alexandria, VA 22313-1450
www.uspto.gov

Decision Date : July 18,2011

DECISION ON PETITION

In re Application of :

Jon Morisey

Application No : 12618966

Filed : 16-Nov-2009

Attorney Docket No : MORIJ40986

This is an electronic decision on the petition, filed July 18,2011 ,which is being treated as a petition under 37 CFR 1.137(b) to revive the instant nonprovisional application for failure to timely notify the U.S. Patent and Trademark Office (USPTO) of the filing of an application in a foreign country, or under a multinational treaty that requires publication of applications eighteen months after filing. See 37 CFR 1.137(f).

The petition is **GRANTED.**

Petitioner states that the present nonprovisional application is the subject of a foreign or international application filed on

11-16-2010

However, the USPTO was unintentionally not notified of this filing within 45 days subsequent to the filing of the subject application in a foreign country.

In view of the above, this application became abandoned pursuant to 35 U.S.C. § 122(b)(2)(B)(iii) and 37 CFR 1.213(c) for failure to timely notify the Office of the filing of an application in a foreign country, or under a multilateral international agreement that requires publication of applications 18 months after filing.

A petition under 37 CFR 1.137(f) must be accompanied by:
(1) the reply which is met by the notification of such filing in a foreign country or under a multinational treaty;
(2) the petition fee as set forth in 37 CFR 1.17(m); and
(3) a statement that the entire delay in filing the required notice of a foreign or international filing from the due date for the required notice until the filing of a grantable petition under 37 CFR 1.137(b) was unintentional.

The instant petition has been found to be in compliance with 37 CFR 1.137(b). Accordingly, the failure to timely notify the USPTO of a foreign or international filing within 45 days after the date of filing of such foreign or international application as provided by 35 U.S.C. § 122(b)(2)(B)(iii) and 37 CFR 1.213(c) is accepted as having been unintentionally delayed.

The previous Request and Certification under 35 U.S.C. § 122(b)(2)(B)(i) has been rescinded. A Notice Regarding Rescission of Nonpublication Request which sets forth the projected publication date will be viewable in Private PAIR within one (1) business day.

This application file is being directed to the Office of Data Management.

Telephone inquiries concerning this decision should be directed to the Patent Electronic Business Center (EBC) at 866-217-9197.

Office of Petitions

Doc Code: PET.AUTO **Document Description: Petition automatically granted by EFS-Web**	PTO/SB/83 U.S. Patent and Trademark Office Department of Commerce

Electronic Petition Request	**REQUEST FOR WITHDRAWAL AS ATTORNEY OR AGENT AND CHANGE OF CORRESPONDENCE ADDRESS**
Application Number	12619041
Filing Date	16-Nov-2009
First Named Inventor	Steven Kim
Art Unit	2875
Examiner Name	SHARON PAYNE
Attorney Docket Number	117367-05026
Title	LED BULB WITH MODULES HAVING SIDE-EMITTING LIGHT EMITTING DIODES AND ROTATABLE BASE

◉ Please withdraw me as attorney or agent for the above identified patent application and the practitioners of record associated with Customer Number: 70144

The reason(s) for this request are those described in 37 CFR:

10.40(c)(5)

Certifications

☒ I/We have given reasonable notice to the client, prior to the expiration of the response period, that the practitioner(s) intend to withdraw from employment

☒ I/We have delivered to the client or a duly authorized representative of the client all papers and property (including funds) to which the client is entitled

☒ I/We have notified the client of any responses that may be due and the time frame within which the client must respond

Change the correspondence address and direct all future correspondence to the first named inventor or assignee that has properly made itself of record pursuant to 37 CFR 3.71:

Name	Dr. Steven Kim LED Folio Corporation
Address	5N Corporate Drive
City	Riverdale
State	NJ
Postal Code	07457
Country	US

I am authorized to sign on behalf of myself and all withdrawing practitioners.	
Signature	/John Moran/
Name	John Paul Moran
Registration Number	30906

UNITED STATES PATENT AND TRADEMARK OFFICE

Commissioner for Patents
United States Patent and Trademark Office
P.O. Box 1450
Alexandria, VA 22313-1450
www.uspto.gov

Decision Date : March 22, 2012

In re Application of :

Steven Kim

Application No : 12619041

Filed : 16-Nov-2009

Attorney Docket No : 117367-05026

DECISION ON REQUEST TO WITHDRAW AS ATTORNEY/AGENTOF RECORD

This is an electronic decision on the Request to Withdraw as attorney or agent of record under 37 CFR § 1.36(b), filed March 22, 2012

The request is **APPROVED.**

The request was signed by John Paul Moran (registration no. 30906) on behalf of all attorneys/agents associated with Customer Number 70144 . All attorneys/agents associated with Cusotmer Number 70144 have been withdrawn.

Since there are no remaining attorneys of record, all future communications from the Office will be directed to the first named inventor or assignee that has properly made itself of record pursuant to 37 CFR 3.71, with correspondence address:

Name	Dr. Steven Kim
Name2	LED Folio Corporation
Address 1	5N Corporate Drive
Address 2	
City	Riverdale
State	NJ
Postal Code	07457
Country	US

As a reminder, requester is required to inform the first named inventor or assignee that has properly made itself of record pursuant to 37 CFR 3.71 of the electronically processed petition.

Telephone inquiries concerning this decision should be directed to the Patent Electronic Business Center (EBC) at 866-217-9197.

Office of Petitions

UNITED STATES PATENT AND TRADEMARK OFFICE

UNITED STATES DEPARTMENT OF COMMERCE
United States Patent and Trademark Office
Address: COMMISSIONER FOR PATENTS
P.O. Box 1450
Alexandria, Virginia 22313-1450
www.uspto.gov

APPLICATION NO.	FILING DATE	FIRST NAMED INVENTOR	ATTORNEY DOCKET NO.	CONFIRMATION NO.
12/619,171	11/16/2009	Shinichiro KOSUGI	350822US2S	8116

7590 12/23/2010

OBLON, SPIVAK, MCCLELLAND MAIER & NEUSTADT, L.L.P.
1940 DUKE STREET
ALEXANDRIA, VA 22314

EXAMINER	
PARSONS, THOMAS H	

ART UNIT	PAPER NUMBER
1729	

NOTIFICATION DATE	DELIVERY MODE
12/23/2010	ELECTRONIC

DECISION GRANTING PETITION UNDER 37 CFR 1.138(d)

The declaration of express abandonment is recognized

This is in response to the petition under 37 CFR 1.138(d), requesting for a refund of any previously paid search fee and excess claims fee in the above-identified application.

The petition is granted.

The express abandonment is recognized. Any previously paid search fee and excess claims fee are hereby refunded.

Telephone inquiries should be directed to the Office of Data Management at (571) 272-4200.

Patent Publication Branch
Office of Data Management

UNITED STATES PATENT AND TRADEMARK OFFICE

Commissioner for Patents
United States Patent and Trademark Office
P.O. Box 1450
Alexandria, VA 22313-1450
www.uspto.gov

HOFFMANN & BARON, LLP
6900 JERICHO TURNPIKE
SYOSSET NY 11791

MAILED

JAN 23 2012

OFFICE OF PETITIONS

In re Application of :
Ian Rubin De La Borbolla :
Application No. 12/619,207 : DECISION REFUSING STATUS
Filed: November 16, 2009 : UNDER 37 CFR 1.47(b)
Attorney Docket No. 577-922 :

This decision is in response to the petition filed January 5, 2010 under 37 CFR 1.47(b).

The petition is **DISMISSED**.

Rule 47 applicant is given TWO MONTHS from the mailing date of this decision to respond, correcting the below-noted deficiencies. Any response should be entitled "Request for Reconsideration of Petition Under 37 CFR 1.47(b)" and may include an oath or declaration executed by the inventor. **Failure to respond will result in abandonment of the application.** Any extensions of time will be governed by 37 CFR 1.136(a).

The above-identified application, naming Ian Rubin De La Borbolla as the sole inventor, was filed on November 16, 2009 without an executed oath or declaration. Accordingly, on December 1, 2009 , a "Notice To File Missing Parts of Nonprovisional Application" was mailed, requiring, *inter alia*, an executed oath or declaration and a surcharge for its late filing. In response, the present petition was filed. The petition argues that Mr. De La Borbolla refuses to participate in the prosecution of the above-referenced application and thus seeks status under 37 CFR 1.47(b).

A grantable petition under 37 CFR 1.47(b) requires:

(1) proof that the non-signing inventor cannot be reached or refuses to sign the oath or declaration after having been presented with the application papers (specification, claims and drawings);

(2) an acceptable oath or declaration in compliance with 35 U.S.C. §§ 115 and 116;

(3) the petition fee;

(4) a statement of the last known address of the non-signing inventor;

(5) proof of proprietary interest, and

(6) proof of irreparable damage.

The petition lacks items (5) and (6).

In regards to item (5), petitioner must provide proof that the Rule 1.47(b) applicant has sufficient proprietary interest in the subject matter to justify the filing of the application.[1] Petitioners should provide a copy of the employment agreement between the non-signing inventors and the Rule 1.47(b) applicant (company); a copy of an assignment agreement showing that the invention disclosed in the application is assigned to the Rule 1.47(b) applicant; or a legal memorandum signed by an attorney familiar with the law of the jurisdiction stating that a court of competent jurisdiction would by the weight of authority in that jurisdiction award the title of the invention to the Rule 1.47(b) applicant.

There is neither an employment agreement, an assignment or a legal memorandum included with the evidence presented.

In regards to item (6), petitioner must provide proof of irreparable damages in accordance with MPEP 409.03(g).

Further correspondence with respect to this matter should be addressed as follows:

By mail: Mail Stop Petition
Commissioner for Patents
P.O. Box 1450
Alexandria, VA 22313-1450

By FAX: (571) 273-8300

Telephone inquiries concerning this matter may be directed to the undersigned Petitions Attorney at (571) 272-3212.

Patricia Faison-Ball
Senior Petitions Attorney
Office of Petitions

[1] MPEP 409.03(f).

UNITED STATES PATENT AND TRADEMARK OFFICE

Commissioner for Patents
United States Patent and Trademark Office
P.O. Box 1450
Alexandria, VA 22313-1450
www.uspto.gov

HOFFMANN & BARON, LLP
6900 JERICHO TURNPIKE
SYOSSET NY 11791

MAILED

MAR 02 2012

OFFICE OF PETITIONS

In re Application of :
Ian Rubin De La Borbolla :
Application No. 12/619,207 : DECISION ACCORDING STATUS
Filed: November 16, 2009 : UNDER 37 CFR 1.47(b)
Attorney Docket No. 577-922 :

This is in response to the renewed petition filed under 37 CFR 1.47(b) on February 24, 2012.

The petition is **GRANTED**.

The above-identified application, naming Ian Rubin De La Borbolla as the sole inventor, was filed on November 16, 2009 without an executed oath or declaration. Accordingly, on December 1, 2009 , a "Notice To File Missing Parts of Nonprovisional Application" was mailed, requiring, *inter alia*, an executed oath or declaration and a surcharge for its late filing. In response thereof, a petition was filed January 5, 2010 was filed. The petition argued that Mr. De La Borbolla refused to participate in the prosecution of the above-referenced application and thus sought status under 37 CFR 1.47(b). On January 23, 2012, the petition was dismissed because the petition lacked proof of proprietary interest and of irreparable damage.

A grantable petition under 37 CFR 1.47(b) requires:

(1) proof that the non-signing inventor cannot be reached or refuses to sign the oath or declaration after having been presented with the application papers (specification, claims and drawings);

(2) an acceptable oath or declaration in compliance with 35 U.S.C. §§ 115 and 116;

(3) the petition fee;

(4) a statement of the last known address of the non-signing inventor;

(5) proof of proprietary interest, and

(6) proof of irreparable damage.

In response to the decision dismissing the petition filed January 5, 2010, proof of proprietary interest and of irreparable damage has been presented. All requirements under 37 CFR 1.47(b) therefore having been met, as provided in Rule 1.47(c), this

Office will forward notice of this application's filing to the non-signing inventor at the address given in the petition. Notice of the filing of this application will also be published in the Official Gazette.

This matter is being referred to the Publishing Division.

Telephone inquiries related to this decision should be directed to the undersigned Petitions Attorney at (571) 272-3212.

Patricia Faison-Ball
Senior Petitions Attorney
Office of Petitions

UNITED STATES PATENT AND TRADEMARK OFFICE

Commissioner for Patents
United States Patent and Trademark Office
P.O. Box 1450
Alexandria, VA 22313-1450
www.uspto.gov

IAN RUBIN DE LA BORBOLLA
180 SOUTH GREER STREET
MEMPHIS, TN 38111

MAILED

MAR 02 2012

OFFICE OF PETITIONS

In re Application of
Ian Rubin De La Borbolla
Application No. 12/619,207
Filed: November 16, 2009
For: **ANGLED SLOTS FOR INSTALLATION OF OUTDOOR METALLIC BOXES**

Dear Mr. De La Borbolla:

You are named as the sole inventor in the above identified United States patent application, filed under the provisions of 35 U.S.C. 116 (United States Code), and 37 CFR 1.47(b), Rules of Practice in Patent Cases. Should a patent be granted on the application you will be designated therein as the sole inventor.

As the named inventor you are entitled to inspect any paper in the file wrapper of the application, order copies of all or any part thereof (at a prepaid cost per 37 CFR 1.19) or make your position of record in the application. Alternatively, you may arrange to do any of the preceding through a registered patent attorney or agent presenting written authorization from you. If you care to join the application, counsel of record (see below) would presumably assist you. Joining in the application would entail the filing of an appropriate oath or declaration by you pursuant to 37 CFR 1.63.

Telephone inquiries regarding this communication should be directed to the undersigned Petitions Attorney at (571) 272-3212. Requests for information regarding your application should be directed to the File Information Unit at 703/308-2733. Information regarding how to pay for and order a copy of the application, or a specific paper in the application, should be directed to Certification Division at 571/272-3150 or 1-800-972-6382 (outside the Washington D.C. area).

Patricia Faison-Ball
Senior Petitions Attorney
Office of Petitions

cc:

HOFFMANN & BARON, LLP
6900 JERICHO TURNPIKE
SYOSSET NY 11791

UNITED STATES PATENT AND TRADEMARK OFFICE

Commissioner for Patents
United States Patent and Trademark Office
P.O. Box 1450
Alexandria, VA 22313-1450
www.uspto.gov

HAZEN PATENT GROUP, LLC
1534 W. ISLANDIA DRIVE
GILLBERT, AZ 85233

MAILED

AUG 17 2010

OFFICE OF PETITIONS

In re Application of
Vladimir Balakin
Application No. 12/619,278
Filed: November 16, 2009
Attorney Docket No. PROT0030

DECISION ON PETITION
TO MAKE SPECIAL UNDER
37 CFR 1.102(c)(1)

This is a decision on the petition under 37 CFR 1.102(c)(1), filed July 15, 2010, to make the above-identified application special based on applicant's age as set forth in M.P.E.P. § 708.02, Section IV.

The petition is **GRANTED**.

A grantable petition to make an application special under 37 CFR 1.102(c)(1) and MPEP § 708.02, Section IV: Applicant's Age must be accompanied by evidence showing that at least one of the applicants is 65 years of age, or more, such as a birth certificate or a statement by applicant. No fee is required

The instant petition includes a statement signed by applicant's representative that he is in possession of proof of applicant's age. Accordingly, the above-identified application has been accorded "special" status.

Telephone inquiries concerning this decision should be directed to undersigned at 571-272-1642.

All other inquiries concerning either the examination or status of the application should be directed to the Technology Center.

The application is being forwarded to the Technology Center Art Unit 2821 for action on the merits commensurate with this decision.

/AMW/
April M. Wise
Petitions Examiner
Office of Petitions

UNITED STATES PATENT AND TRADEMARK OFFICE

Commissioner for Patents
United States Patent and Trademark Office
P.O. Box 1450
Alexandria, VA 22313-1450
www.uspto.gov

HAZEN PATENT GROUP, LLC
1534 W. ISLANDIA DR.
GILLBERT AZ 85233

MAILED
MAY 3 1 2011
OFFICE OF PETITIONS

In re Application of :
Balakin :
Application No. 12/619,278 : DECISION
Filed: 16 November, 2009 :
Attorney Docket No. PROT0030

This is a decision on the petition filed on 12 March, 2011, under 37 C.F.R. §1.27(g)(2) requesting that status as a Small Entity be removed.

NOTE:

In view of their duty of candor to the Office to properly inquire to ascertain the accuracy of representations made before the Office (*see*: 37 C.F.R. §1.4, §10.18, MPEP §410), Petitioners always are reminded of the responsibility to review their records and submit accurate information to the Office.

It does not appear that Petitioner has provided the express schedule of fees/codes, payments made, payments due and differentials, with totals. (*See*: 37 C.F.R. §1.27, §1.28, MPEP §509.02, et seq.) The Office will not attempt to infer Petitioner's specific intents.

If Petitioner's only intent was to Notice the Office of Change of Status, Petitioner is reminded to Notice the Office on payment of the next fees submitted.

As of this writing, Petitioner's submission is **NOT ACCEPTED** in the absence of a specification of the fees/codes, payments made, payments due and differentials, with totals.

Petitioner's request for reconsideration of this decision **must** be submitted within TWO (2) MONTHS from the mail date of this decision. Extensions of time under 37 CFR §1.136(a) are permitted. The reconsideration request should include a cover letter entitled "Renewed Petition under 37 CFR §1.27, §1.28."

This is **not** a final agency action within the meaning of 5 U.S.C. §704.

The availability of applications and application papers online to applicants/practitioners who diligently associate their Customer Number with the respective application(s) now provides an applicant/practitioner on-demand information as to events/transactions in an application.

Out of an abundance of caution, Petitioners always are reminded that that those registered to practice and all others who make representations before the Office **must** inquire into the underlying facts of representations made to the Office and support averments with the appropriate documentation–since all owe to the Office the continuing duty to disclose.[1]

CONCLUSION

The instant petition under 37 C.F.R. §1.27, §1.28 is **dismissed**.

Further correspondence with respect to this matter should be addressed as follows:

By Mail:
Mail Stop PETITION
Commissioner for Patents
P. O. Box 1450
Alexandria, VA 22313-1450

By hand:
U. S. Patent and Trademark Office
Customer Service Window, Mail Stop Petitions
Randolph Building
401 Dulany Street
Alexandria, VA 22314

The centralized facsimile number is **(571) 273-8300.**

The application is released to Technology Center/AU 2821 for further processing in due course.

[1] See supplement of 17 June, 1999. The Patent and Trademark Office is relying on Petitioner's duty of candor and good faith and accepting a statement made by Petitioner. See Changes to Patent Practice and Procedure, 62 Fed. Reg. at 53160 and 53178, 1203 Off. Gaz. Pat. Office at 88 and 103 (responses to comments 64 and 109)(applicant obligated under 37 C.F.R. §10.18 to inquire into the underlying facts and circumstances when providing statements to the Patent and Trademark Office).

Telephone inquiries regarding this decision may be directed to the undersigned at (571) 272-3214—it is noted, however, that all practice before the Office is in writing (see: 37 C.F.R. §1.2[2]) and the proper authority for action on any matter in this regard are the statutes (35 U.S.C.), regulations (37 C.F.R.) and the commentary on policy (MPEP). Therefore, no telephone discussion may be controlling or considered authority for Petitioner's action(s).

/John J. Gillon, Jr./
John J. Gillon, Jr.
Senior Attorney
Office of Petitions

[2] The regulations at 37 C.F.R. §1.2 provide:
§1.2 Business to be transacted in writing.
All business with the Patent and Trademark Office should be transacted in writing. The personal attendance of applicants or their attorneys or agents at the Patent and Trademark Office is unnecessary. The action of the Patent and Trademark Office will be based exclusively on the written record in the Office. No attention will be paid to any alleged oral promise, stipulation, or understanding in relation to which there is disagreement or doubt.

UNITED STATES PATENT AND TRADEMARK OFFICE

Commissioner for Patents
United States Patent and Trademark Office
P.O. Box 1450
Alexandria, VA 22313-1450
www.uspto.gov

MAILED

APR 26 2011

OFFICE OF PETITIONS

BIRCH STEWART KOLASCH & BIRCH
PO BOX 747
FALLS CHURCH VA 22040-0747

In re Application of	:	
Risto Tuominen et al	:	
Application No. 12/619,350	:	DECISION GRANTING PETITION
Filed: November 16, 2009	:	UNDER 37 CFR 1.313(c)(2)
Attorney Docket No. 0365-0652PUS2	:	

This is a decision on the petition under 37 CFR 1.313(c)(2), filed April 25, 2011, to withdraw the above-identified application from issue after payment of the issue fee.

The petition is **GRANTED**.

The above-identified application is withdrawn from issue for consideration of a submission under 37 CFR 1.114 (request for continued examination). *See* 37 CFR 1.313(c)(2).

Petitioner is advised that the issue fee paid on April 14, 2011 cannot be refunded. If, however, this application is again allowed, petitioner may request that it be applied towards the issue fee required by the new Notice of Allowance.[1]

Telephone inquiries should be directed to the undersigned at (571) 272-3208.

This application is being referred to Technology Center AU 2823 for processing of the request for continued examination under 37 CFR 1.114 and for consideration of the concurrently filed IDS.

/Karen Creasy/
Karen Creasy
Petitions Examiner
Office of Petitions

[1] *The request to apply the issue fee to the new Notice may be satisfied by completing and returning the new Part B – Fee(s) Transmittal Form (along with any balance due at the time of submission). Petitioner is advised that the Issue Fee Transmittal Form* ***must*** *be completed and timely submitted to avoid abandonment of the application.*

UNITED STATES PATENT AND TRADEMARK OFFICE

Commissioner for Patents
United States Patent and Trademark Office
P.O. Box 1450
Alexandria, VA 22313-1450
www.uspto.gov

MAILED

DEC 02 2010

OFFICE OF PETITIONS

HAMILTON, BROOK, SMITH & REYNOLDS, P.C.
530 VIRGINIA ROAD
P.O. BOX 9133
CONCORD, MA 01742-9133

In re Application of
Jony Wijaya
Application No. 12/619,413
Filed: November 16,2009
Attorney Docket No. 3090.1042-001
(D3974US)

DECISION REFUSING STATUS
UNDER 37 CFR 1.47(b)

This is in response to the petition under 37 CFR 1.47(b), filed May 27, 2010.

The instant petition is not signed by an attorney of record. However, in accordance with 37 CFR 1.34(a); the signature of N. Scott Pierce appearing on the petition shall constitute a representation to the United States Patent and Trademark Office that he is authorized to represent the particular party on whose behalf he acts.

The petition is **DISMISSED**.

A grantable petition under 37 CFR 1.47(b) requires:

(1) proof that the non-signing inventor cannot be reached after diligent effort or refuses to sign the oath or declaration after having been presented with the application papers (specification, claims and drawings);
(2) an acceptable oath or declaration in compliance with 35 U.S.C. §§ 115 and 116;
(3) the petition fee;
(4) a statement of the last known address of the non-signing inventor.
(5) proof of proprietary interest: and
(6) proof of irreparable damage.

The petition lacks items (2) and (5) set forth above.

As to item (2), an oath or declaration for the patent application in compliance with 37 CFR 1.63 and 1.64 has not been presented. The declaration has not been signed by a properly empowered representative of the Rule 47 applicant. **No one** has signed the declaration. An oath or declaration in compliance with 37 CFR 1.63 and 1.64 listing Mr. Wijaya's information, signed by the Rule 1.47 applicant on behalf of Mr. Wijaya is REQUIRED. *See* MPEP 409.03(b).

MPEP 409.03(b) states that typically when a corporation is the Rule 47 applicant, an officer should sign the declaration and provide his/her title. Where an oath is signed by a registered attorney on behalf of a corporation, either proof of the attorney's authority in the form of a statement signed by an appropriate corporate officer must be submitted, or the attorney may simply state that he is authorized to sign on behalf of the corporation. The Rule 47 applicant must state his/her relationship to the inventor as required by 37 CFR 1.64.

As to item (5), Rule 47 applicant has failed to show or provide proof that Saint-Gobain Abrasives, Inc. and Saint-Gobain Abrasif has sufficient proprietary interest in the subject matter to justify the filing of the application (see MPEP 409.03(f)). Acceptable proof would include a copy of the employment agreement between the non-signing inventor and the Rule 47(b) applicant (company), a copy of an assignment agreement showing that the invention disclosed in the application is assigned to the Rule 47(b) applicant, or a legal memorandum signed by an attorney familiar with the law of the jurisdiction stating that a court of competent jurisdiction would by the weight of authority in that jurisdiction award the title of the invention to the Rule 47(b) applicant.

Rule 47 applicant is given **TWO (2) MONTHS** from the mailing date of this decision to reply, correcting the above-noted deficiencies. Any reply should be entitled "Request for Reconsideration of Petition under 37 CFR 1.47(b)," and should only address the deficiencies noted below, except that the reply may include an oath or declaration executed by the non-signing inventor. **FAILURE TO RESPOND WILL RESULT IN ABANDONMENT OF THE APPLICATION.** Any extensions of time will be governed by 37 CFR 1.136(a).

Further correspondence with respect to this matter should be addressed as follows:

By Mail:
Mail Stop PETITION
Commissioner for Patents
Post Office Box 1450
Alexandria, VA 22313-1450

By Hand:
U. S. Patent and Trademark Office
Customer Window, Mail Stop PETITIONS
401 Dulany Street
Alexandria, VA 22314

The Centralized facsimile number is (571) 273-8300, and documentation to this number should be addressed to the Office of Petitions.

Correspondence regarding this decision may also be filed through the electronic filing system of the USPTO.

Telephone inquiries regarding this decision should be directed to the undersigned at (571) 272-3226.

Andrea Smith
Petitions Examiner
Office of Petitions

UNITED STATES PATENT AND TRADEMARK OFFICE

Commissioner for Patents
United States Patent and Trademark Office
P.O. Box 1450
Alexandria, VA 22313-1450
www.uspto.gov

HAMILTON, BROOK, SMITH & REYNOLDS, P.C.
530 VIRGINIA ROAD
P.O. BOX 9133
CONCORD, MA 01742-9133

MAILED

MAY 11 2011

OFFICE OF PETITIONS

In re Application of
Jony Wijaya
Application No. 12/619,413
Filed: November 16,2009
Attorney Docket No. 3090.1042-001
(D3974US)

DECISION GRANTING STATUS
UNDER 37 CFR 1.47(b)

This is in response to the renewed petition under 37 CFR 1.47(b), filed April 22, 2011.

The instant petition is not signed by an attorney of record. However, in accordance with 37 CFR 1.34(a), the signature of N. Scott Pierce appearing on the petition shall constitute a representation to the United States Patent and Trademark Office that he is authorized to represent the particular party on whose behalf he acts.

The petition is **GRANTED**.

Petitioner has shown that the non-signing inventor cannot be located to join in the filing of the above-identified application.

The application and papers have been reviewed and found in compliance with 37 CFR 1.47(b). This application is hereby accorded Rule 1.47(b) status.

As provided in 37 CFR 1.47(c), this Office will forward notice of this application's filing to the non-signing inventor at the address given in the petition. Notice of the filing of this application will also be published in the Official Gazette.

This application file is being referred to Technology Center Art Unit 3723 for examination in due course.

Telephone inquiries regarding this decision should be directed to the undersigned at (571) 272-3226.

Andrea Smith
Petitions Examiner
Office of Petitions

UNITED STATES PATENT AND TRADEMARK OFFICE

Commissioner for Patents
United States Patent and Trademark Office
P.O. Box 1450
Alexandria, VA 22313-1450
www.uspto.gov

Jony Wijaya
47-4 Briarwood Lane
Marlboro, MA 01752

MAILED

MAY 11 2011

OFFICE OF PETITIONS

In re Application of
Jony Wijaya
Application No. 12/619,413
Filed: November 16, 2009
For: ACRYLATE COLOR-STABILIZED PHENOLIC BOUND ABRASIVE PRODUCTS AND METHODS FOR MAKING SAME

Dear Mr. Wijaya:

You are named as a joint inventor in the above-identified United States patent application, filed under the provisions of 35 U.S.C. 116 (United States Code), and 37 CFR 1.47(b), Rules of Practice in Patent Cases. Should a patent be granted on the application you will be designated therein as a sole inventor.

As a named inventor you are entitled to inspect any paper in the file wrapper of the application, order copies of all or any part thereof (at a prepaid cost per 37 CFR 1.19) or make your position of record in the application. Alternatively, you may arrange to do any of the preceding through a registered patent attorney or agent presenting written authorization from you. If you care to join the application, counsel of record (see below) would presumably assist you. Joining the application would entail the filing of an appropriate oath or declaration by you pursuant to 37 CFR 1.63.

Telephone inquiries regarding this communication should be directed to the undersigned at (571) 272-3226. Requests for information regarding your application should be directed to the File Information Unit at (703) 308-2733. Information regarding how to pay for and order a copy of the application, or a specific paper in the application, should be directed to the Certification Division at (571) 272-3150 or 1 (800) 972-6382 (outside the Washington, DC area).

Andrea Smith
Petitions Examiner
Office of Petitions

cc: HAMILTON, BROOK, SMITH & REYNOLDS, P.C.
530 VIRGINIA ROAD
P.O. BOX 9133
CONCORD, MA 01742-9133

UNITED STATES PATENT AND TRADEMARK OFFICE

UNITED STATES DEPARTMENT OF COMMERCE
United States Patent and Trademark Office
Address: COMMISSIONER FOR PATENTS
P.O. Box 1450
Alexandria, Virginia 22313-1450
www.uspto.gov

APPLICATION NO.	FILING DATE	FIRST NAMED INVENTOR	ATTORNEY DOCKET NO.	CONFIRMATION NO.
12/619,432	11/16/2009	Yasuyuki Tanaka	6639P627X	8595

8791 7590 04/20/2011

BLAKELY SOKOLOFF TAYLOR & ZAFMAN LLP
1279 OAKMEAD PARKWAY
SUNNYVALE, CA 94085-4040

EXAMINER	
WU, XIAO MIN	
ART UNIT	PAPER NUMBER
2628	

MAIL DATE	DELIVERY MODE
04/20/2011	PAPER

Please find below and/or attached an Office communication concerning this application or proceeding.

The time period for reply, if any, is set in the attached communication.

UNITED STATES PATENT AND TRADEMARK OFFICE

Commissioner for Patents
United States Patent and Trademark Office
P.O. Box 1450
Alexandria, VA 22313-1450
www.uspto.gov

MAIL

APR 20 2011

DIRECTOR'S OFFICE
TECHNOLOGY CENTER 2600

BLAKELY SOKOLOFF TAYLOR & ZAFMAN LLP
1279 OAKMEAD PARKWAY
SUNNYVALE CA 94085-4040

In re Application of :
TANAKA, YASUYUKI :
Application No. 12/619,432 :
Filed: November 16, 2009 :
Attorney Docket No. 6639P627X :

DECISION ON REQUEST TO PARTICIPATE IN PATENT PROSECUTION HIGHWAY PROGRAM AND PETITION TO MAKE SPECIAL UNDER 37 CFR 1.102(a)

This is a decision on the request to participate in the Patent Prosecution Highway (PPH) program and the petition under 37 CFR 1.102(a), filed March 16, 2011, to make the above-identified application special.

The request and petition are **DISMISSED**.

A grantable request to participate in the PPH program and petition to make special require:

(1) The U.S. application must validly claim priority under 35 U.S.C. 119(a) to one or more applications filed in the JPO;
(2) Applicant must submit a copy of the allowable/patentable claim(s) from the JPO application(s) along with an English translation thereof and a statement that the English translation is accurate;
(3) All the claims in the U.S. application must sufficiently correspond or be amended to sufficiently correspond to the allowable/patentable claim(s) in the JPO application(s);
(4) Examination of the U.S. application has not begun;
(5) Applicant must submit a copy of all the office actions from each of the JPO application(s) containing the allowable/patentable claim(s) along with an English translation thereof and a statement that the English translation is accurate; and
(6) Applicant must submit an IDS listing the documents cited by the JPO examiner in the JPO office action along with copies of documents except U.S. patents or U.S. patent application publications.

The request to participate in the PPH program and petition is deficient as follows:

Petitioner has not complied with items 2 and 6 above.

Petitioner has not complied with item 2 in that although a document including a translation of the claims from the JPO application containing the allowable/patentable claims has been submitted. However, the document does not appear to include the entire translation of claim 8. The translation abruptly ends at the word "the". It appears the last paragraph of claim 8 is missing from the document.

Regarding item 6, documents listed on the IDS that were cited by the JPO examiner in the JPO office action must be submitted. A review of the file record history fails to include the document Jpn. Pat. Appln. KOKAI Publication No. 2007-305113 that was cited in the JPO office action and cited on IDS filed November 16, 2009.

Applicant is given a time period of **ONE MONTH or THIRTY DAYS**, whichever is longer, from the mailing date of this decision to correct the deficiencies. **NO EXTENSION OF TIME UNDER 37 CFR 1.136 IS PERMITTED.** If the deficiencies are not corrected with the time period given, the application will await action in its regular turn.

Any response must be submitted via EFS-web.

Telephone inquiries concerning this decision should be directed to Michael Horabik at 571-272-3068.

All other inquiries concerning the examination or status of the application should be directed to Patent Application Information Retrieval (PAIR) system.

/Michael Horabik/

Michael Horabik
Quality Assurance Specialist
Technology Center 2600
Communications

UNITED STATES PATENT AND TRADEMARK OFFICE

UNITED STATES DEPARTMENT OF COMMERCE
United States Patent and Trademark Office
Address: COMMISSIONER FOR PATENTS
P.O. Box 1450
Alexandria, Virginia 22313-1450
www.uspto.gov

APPLICATION NO.	FILING DATE	FIRST NAMED INVENTOR	ATTORNEY DOCKET NO.	CONFIRMATION NO.
12/619,432	11/16/2009	Yasuyuki Tanaka	6639P627X	8595

8791 7590 05/31/2011

BLAKELY SOKOLOFF TAYLOR & ZAFMAN LLP
1279 OAKMEAD PARKWAY
SUNNYVALE, CA 94085-4040

EXAMINER	
WU, XIAO MIN	

ART UNIT	PAPER NUMBER
2628	

MAIL DATE	DELIVERY MODE
05/31/2011	PAPER

Please find below and/or attached an Office communication concerning this application or proceeding.

The time period for reply, if any, is set in the attached communication.

UNITED STATES PATENT AND TRADEMARK OFFICE

Commissioner for Patents
United States Patent and Trademark Office
P.O. Box 1450
Alexandria, VA 22313-1450
www.uspto.gov

MAIL

MAY 31 2011

DIRECTOR'S OFFICE
TECHNOLOGY CENTER 2600

BLAKELY SOKOLOFF TAYLOR & ZAFMAN LLP
1279 OAKMEAD PARKWAY
SUNNYVALE CA 94085-4040

In re Application of	:	
TANAKA, YASUYUKI	:	DECISION ON REQUEST TO
Application No. 12/619,432	:	PARTICIPATE IN PATENT
Filed: November 16, 2009	:	PROSECUTION HIGHWAY
Attorney Docket No. 6639P627X	:	PROGRAM AND PETITION
	:	TO MAKE SPECIAL UNDER
	:	37 CFR 1.102(a)

This is a decision on the renewed request to participate in the Patent Prosecution Highway (PPH) program and the petition under 37 CFR 1.102(a), filed May 18, 2011 to make the above-identified application special.

The request and petition are **GRANTED**.

A grantable request to participate in the PPH program and petition to make special require:

(1) The U.S. application must validly claim priority under 35 U.S.C. 119(a) to one or more applications filed in the JPO;
(2) Applicant must submit a copy of the allowable/patentable claim(s) from the JPO application(s) along with an English translation thereof and a statement that the English translation is accurate;
(3) All the claims in the U.S. application must sufficiently correspond or be amended to sufficiently correspond to the allowable/patentable claim(s) in the JPO application(s);
(4) Examination of the U.S. application has not begun;
(5) Applicant must submit a copy of all the office actions from each of the JPO application(s) containing the allowable/patentable claim(s) along with an English translation thereof and a statement that the English translation is accurate; and
(6) Applicant must submit an IDS listing the documents cited by the JPO examiner in the JPO office action along with copies of documents except U.S. patents or U.S. patent application publications.

The request to participate in the PPH program and petition now comply with the above requirements. Accordingly, the above-identified application has been accorded "special" status.

Telephone inquiries concerning this decision should be directed to Michael Horabik at 571-272-3068.

All other inquiries concerning the examination or status of the application should be directed to Patent Application Information Retrieval (PAIR) system.

The application is being forwarded to the examiner for action on the merits commensurate with this decision.

/Michael Horabik/

Michael Horabik
Quality Assurance Specialist
Technology Center 2600
Communications

UNITED STATES PATENT AND TRADEMARK OFFICE

Commissioner for Patents
United States Patent and Trademark Office
P.O. Box 1450
Alexandria, VA 22313-1450
www.uspto.gov

PATTERSON & SHERIDAN, L.L.P.
3040 POST OAK BOULEVARD
SUITE 1500
HOUSTON TX 77056

MAILED

SEP 23 2010

OFFICE OF PETITIONS

In re Application of :
Lukyanov, et al. :
Application No. 12/619,488 : ON PETITION
Filed: NO FILING DATE ACCORDED :
Attorney Docket No.: EVRO/0013.D1 :

This is a decision on the petition under 37 CFR 1.57 filed May 13, 2010, requesting that the above-identified application be accorded a filing date of November 16, 2009.

The petition is **dismissed**.

The application was deposited on November 16, 2009. On May 7, 2010, the Office of Patent Application Processing mailed a Notice of Incomplete Non-Provisional Application stating that the application had not been accorded a filing date because drawings were not found with the application papers, but appeared to be necessary to understand the invention claimed. The notice provided for a period for reply of two-months from its mailing date.

The instant petition was filed on May 13, 2010, and was accompanied by drawings. A review of the application file reveals that a priority claim to non-provisional application 11/651,728 was present on filing.

37 CFR 1.57 states, in pertinent part, that:

> (a) Subject to the conditions and requirements of this paragraph, if all or a portion of the specification or drawing(s) is inadvertently omitted from an application, but the application contains a claim under § 1.55 for priority of a prior-filed foreign application, or a claim under § 1.78 for the benefit of a prior-filed provisional, nonprovisional, or international application, that was present on the filing date of the application, and the inadvertently omitted portion of the specification or drawing(s) is completely contained in the prior-filed application, the claim under § 1.55 or § 1.78 shall also be considered an incorporation by reference of the prior- filed application as to the inadvertently omitted portion of the specification or drawing(s).
>
> (1) The application must be amended to include the inadvertently omitted portion of the specification or drawing(s) within any time period set by the Office, but in no case later than the close of prosecution as defined by § 1.114(b), or abandonment of the application, whichever occurs earlier. The applicant is also required to:
>
> (i) Supply a copy of the prior-filed application, except where the prior- filed application is an application filed under 35 U.S.C. 111;

(ii) Supply an English language translation of any prior-filed application that is in a language other than English; and

(iii) Identify where the inadvertently omitted portion of the specification or drawings can be found in the prior-filed application.

...

(3) If an application is not otherwise entitled to a filing date under § 1.53(b), the amendment must be by way of a petition pursuant to this paragraph, accompanied by the fee set forth in § 1.17(f).

The petition fails to comply with 37 CFR 1.57(a).

Petitioner has not provided an amendment to include the omitted drawings as required 37 CFR 1.57(a). Any renewed petition filed must be accompanied by an amendment requesting entry of the inadvertently omitted drawings.

Any request for reconsideration must be filed within TWO MONTHS of the date of this decision in order to be considered timely. This period may not be extended pursuant to 37 CFR 1.136.

Further correspondence with respect to this matter should be addressed as follows:

By mail:	Mail Stop Petition Commissioner for Patents PO Box 1450 Alexandria, VA 22313-1450
By FAX:	(571) 273-8300 Attn: Office of Petitions
By hand:	Customer Service Window Mail Stop Petitions Randolph Building 401 Dulany Street Alexandria, VA 22314

Telephone inquiries concerning this matter may be directed to Kenya A. McLaughlin, Petitions Attorney, at (571) 272-3222.

Chris Bottorff
Supervisor
Office of Petitions

UNITED STATES PATENT AND TRADEMARK OFFICE

Commissioner for Patents
United States Patent and Trademark Office
P.O. Box 1450
Alexandria, VA 22313-1450
www.uspto.gov

PATTERSON & SHERIDAN, L.L.P.
3040 POST OAK BOULEVARD
SUITE 1500
HOUSTON TX 77056

MAILED

DEC 03 2010

OFFICE OF PETITIONS

In re Application of :
Lukyanov, et al. :
Application No. 12/619,488 : ON PETITION
Filed: November 16, 2009 :
Attorney Docket No.: EVRO/0013.D1 :

This is a decision on the renewed petition under 37 CFR 1.57 filed November 2, 2010.

The petition is **granted.**

The application was deposited on November 16, 2009. On May 7, 2010, the Office of Patent Application Processing mailed a Notice of Incomplete Non-Provisional Application stating that the application had not been accorded a filing date because drawings were not found with the application papers, but appeared to be necessary to understand the invention claimed. The notice provided for a period for reply of two-months from its mailing date.

The instant renewed petition was filed on November 2, 2010, and is accompanied by an amendment requesting entry of the omitted drawings found in prior-filed non-provisional application 11/651,728. A review of the application file reveals that the subject application, on filing, claimed priority under 37 CFR 1.78 to non-provisional application 11/651,728.

Effective September 21, 2004, 37 CFR 1.57 allows a priority claim to a prior-filed application to be considered an incorporation by reference statement allowing for the incorporation of the prior filed application as to inadvertently omitted portion of the specification or drawings. When using 37 CFR 1.57, applicant's are required to amend the application to include the inadvertently omitted material, and identify where the inadvertently omitted portion of the drawings can be found in the prior-filed application.

It is noted that 37 CFR 1.57(a)(3) indicates that if the application is not otherwise entitled to a filing date under 37 CFR 1.53(b), the amendment must be by way of the petition. This application was determined not to be entitled to a filing date. Accordingly, a petition is required to amend the application pursuant to 37 CFR 1.57. The petition is granted, accordingly.

The application will be accorded a filing date of November 16, 2009.

The application is being returned to the Office of Patent Application Processing for further processing with a filing date of November 16, 2009. The Office of Patent Application Processing will issue a corrected filing receipt.

Telephone inquiries concerning this matter may be directed to Kenya A. McLaughlin, Petitions Attorney, at (571) 272-3222.

Chris Bottorff
Supervisor
Office of Petitions

UNITED STATES PATENT AND TRADEMARK OFFICE

UNITED STATES DEPARTMENT OF COMMERCE
United States Patent and Trademark Office
Address: COMMISSIONER FOR PATENTS
P.O. Box 1450
Alexandria, Virginia 22313-1450
www.uspto.gov

APPLICATION NO.	FILING DATE	FIRST NAMED INVENTOR	ATTORNEY DOCKET NO.	CONFIRMATION NO.
12/619,576	11/16/2009	Hideki Ohkita	SUTOSH.499AUS	8879

20995 7590 10/18/2010

KNOBBE MARTENS OLSON & BEAR LLP
2040 MAIN STREET
FOURTEENTH FLOOR
IRVINE, CA 92614

EXAMINER	
ANDERSON, MATTHEW D	

ART UNIT	PAPER NUMBER
2618	

NOTIFICATION DATE	DELIVERY MODE
10/18/2010	ELECTRONIC

Please find below and/or attached an Office communication concerning this application or proceeding.

The time period for reply, if any, is set in the attached communication.

Notice of the Office communication was sent electronically on above-indicated "Notification Date" to the following e-mail address(es):

jcartee@kmob.com
efiling@kmob.com
eOAPilot@kmob.com

UNITED STATES PATENT AND TRADEMARK OFFICE

Commissioner for Patents
United States Patent and Trademark Office
P.O. Box 1450
Alexandria, VA 22313-1450
www.uspto.gov

KNOBBE MARTENS OLSON & BEAR LLP
2040 MAIN STREET
FOURTEENTH FLOOR
IRVINE CA 92614

In re Application of	:	
OHKITA, HIDEKI	:	DECISION ON REQUEST TO
Application No. 12/619,576	:	PARTICIPATE IN PATENT
Filed: November 16, 2009	:	PROSECUTION HIGHWAY
Attorney Docket No. **SUTOSH.499AUS**	:	PROGRAM AND PETITION
	:	TO MAKE SPECIAL UNDER
	:	37 CFR 1.102(d)

This is a decision on the request to participate in the Patent Prosecution Highway (PPH) program and the petition under 37 CFR 1.102(d), filed July 27, 2010 to make the above-identified application special.

The request and petition are **GRANTED**.

A grantable request to participate in the PPH program and petition to make special require:

(1) The U.S. application must validly claim priority under 35 U.S.C. 119(a) to one or more applications filed in the JPO;
(2) Applicant must submit a copy of the allowable/patentable claim(s) from the JPO application(s) along with an English translation thereof and a statement that the English translation is accurate;
(3) All the claims in the U.S. application must sufficiently correspond or be amended to sufficiently correspond to the allowable/patentable claim(s) in the JPO application(s);
(4) Examination of the U.S. application has not begun;
(5) Applicant must submit a copy of all the office actions from each of the JPO application(s) containing the allowable/patentable claim(s) along with an English translation thereof and a statement that the English translation is accurate; and
(6) Applicant must submit an IDS listing the documents cited by the JPO examiner in the JPO office action along with copies of documents except U.S. patents or U.S. patent application publications.

The request to participate in the PPH program and petition comply with the above requirements. Accordingly, the above-identified application has been accorded "special" status.

Pursuant to the "Notice regarding the Elimination of the Fee for Petitions To Make Special Filed Under the Patent Prosecution Highway (PPH) Programs" published in the Federal Register on

May 25, 2010 (75 Fed. Reg. 29312), the fee under 37 CFR 1.17(h) for the petition to make special under the Patent Prosecution Highway (PPH) programs has been eliminated. The application is being forwarded to the TC Tech Support staff to process a refund of $130.00. From there application will be forwarded to the examiner for action on the merits commensurate with this decision.

Telephone inquiries concerning this decision should be directed to Doris To at 571-272-7629.

All other inquiries concerning the examination or status of the application should be directed to Patent Application Information Retrieval (PAIR) system.

/Doris To/

Doris To
Quality Assurance Specialist
Technology Center 2600
Communications

Doc Code: PET.GREEN
Document Description: Petition for Green Tech Pilot

PTO/SB/420 (11-10)
Approved for use through 01/31/2011. OMB 0651-0062
U.S. Patent and Trademark Office; U. S. DEPARTMENT OF COMMERCE
Under the Paperwork Reduction Act of 1995, no persons are required to respond to a collection of information unless it displays a valid OMB control number.

PETITION TO MAKE SPECIAL UNDER THE GREEN TECHNOLOGY PILOT PROGRAM

Attorney Docket Number: HOVAK.01A	Application Number (if known): 12619613	Filing date: 16-NOV-2009
First Named Inventor: Henry Hovakimian		
Title: COMPOST UPDRAFT TOWER		

APPLICANT HEREBY REQUESTS TO PARTICIPATE IN THE GREEN TECHNOLOGY PILOT PROGRAM FOR THE ABOVE-IDENTIFIED APPLICATION. See Instruction Sheet on page 2.

This petition must be timely filed electronically using the USPTO electronic filing system, EFS-Web.

1. By filing this petition:

   Applicant is requesting early publication: Applicant hereby requests early publication under 37 CFR 1.219 and the publication fee set forth in 37 CFR 1.18(d) accompanies this request.

2. By filing this petition: applicant is agreeing to make an election without traverse in a telephonic interview and elect an invention that meets the eligibility requirements for the Green Technology Pilot Program, if the Office determines that the claims are not obviously directed to a single invention. See Instruction Sheet.

3. This request is accompanied by statements of special status for the eligibility requirement.

4. The application contains no more than three (3) independent claims and twenty (20) total claims.

5. The application does not contain any multiple dependent claims.

6. Other attachments: _____

Signature /Razmig H. Messerian/	Date Jan-4-2011
Name (Print/Typed) Razmig H. Messerian	Registration Number 56983

Note: *Signatures of all the inventors or assignees of record of the entire interest or their representative(s) are required in accordance with 37 CFR 1.33 and 11.18. Please see 37 CFR 1.4(d) for the form of the signature. If necessary, submit multiple forms for more than one signature see below*.*

☐ *Total of ..... forms are submitted.

The information is required to obtain or retain a benefit by the public which is to file (and by the USPTO to process) an application. Confidentiality is governed by 35 U.S.C. 122 and 37 CFR 1.11 and 1.14. This collection is estimated to take 12 hours to complete, including gathering, preparing, and submitting the completed application form to the USPTO. Time will vary depending upon the individual case. Any comments on the amount of time you require to complete this form and/or suggestions for reducing this burden, should be sent to the Chief Information Officer, U.S. Patent and Trademark Office, U.S. Department of Commerce, P.O. Box 1450, Alexandria, VA 22313-1450. DO NOT SEND FEES OR COMPLETED FORMS TO THIS ADDRESS. **SEND TO: Commissioner for Patents, P.O. Box 1450, Alexandria, VA 22313-1450.**

If you need assistance in completing the form, call 1-800-PTO-9199 and select option 2.

PATENT

IN THE UNITED STATES PATENT AND TRADEMARK OFFICE

In Re Application of	)	
	)	**For:** COMPOST UPDRAFT TOWER
Henry Hovakimian	)	
	)	
Serial No. 12/619,613	)	**Examiner:** Nicholas Ponomarenko
	)	
Filed: November 16, 2009	)	**Art Unit:** 2839

Petition to Make Special Under MPEP § 708.02 –
Accelerated Examination under the Pilot Program for Green Technologies

Filed via EFS
Commissioner for Patents
P.O. Box 1450
Alexandria, VA 22313-1450

Dear Commissioner:

Status of February 19, 2010 Petition to Make Special Under Pilot Program for Green Tech.

On February 19, 2010, Applicant submitted a petition to make special under MPEP §708.02 for accelerated examination under the Pilot Program for Green Technologies along with a $300 publication fee. That petition was dismissed on February 24, 2010 solely because the application was not classified in one of the eligible classifications under the Pilot Program at that time. On May 21, 2010 however, the classification requirement was eliminated, and thus, the present application's 290/52 classification cannot bar eligibility for the Green Technology Pilot Program.

As presented below, Applicant submits that the present application is eligible to be advanced out of order under CFR § 1.102 because the application at least pertains to (1) the development of renewable energy resources.

Basis for Special Status: Invention Pertains to the Development of Renewable Energy Resources

Applicant hereby requests that Application Serial No. 12/619,613 be advanced out of order under CFR § 1.102 as it pertains to the development of renewable energy resources.

Section III of the Dec. 8, 2009 Notice states that "Patent applications are also eligible for the Green Technology Pilot Program if the applications are for inventions that materially contribute to (1): The discovery or development of renewable energy resources." Federal Register Vol. 74, No. 234 at Page 64667 (hereinafter the "*Notice*"). The *Notice* elaborates on this point by stating, "The term 'renewable energy resources' for purposes of the procedure specified in this notice include hydroelectric, solar, wind, **renewable biomass**, **landfill gas**, ocean (including tidal, wave, current, and thermal), geothermal, and **municipal solid waste**, as well as the transmission, distribution, or other services directly used in **providing electrical energy from these sources**."

Applicant seeks special status for accelerated examination under the Green Technology Pilot Program because the present application is materially and substantially related to the development of renewable energy resources by **harnessing the heat energy released by biomass and municipal solid waste during the composting process to generate electricity.** The invention also includes features to utilize solar radiation of the sun to generate electricity in an environmentally friendly manner. The present application provides a clean, cost-efficient energy source that replaces traditional fossil fuel and coal energy sources, while at the same time reduces landfill waste. To help assist the official in allowing the petition, a brief summary of the operation of one aspect of the application is presented below with reference to FIG. 2 of the application.

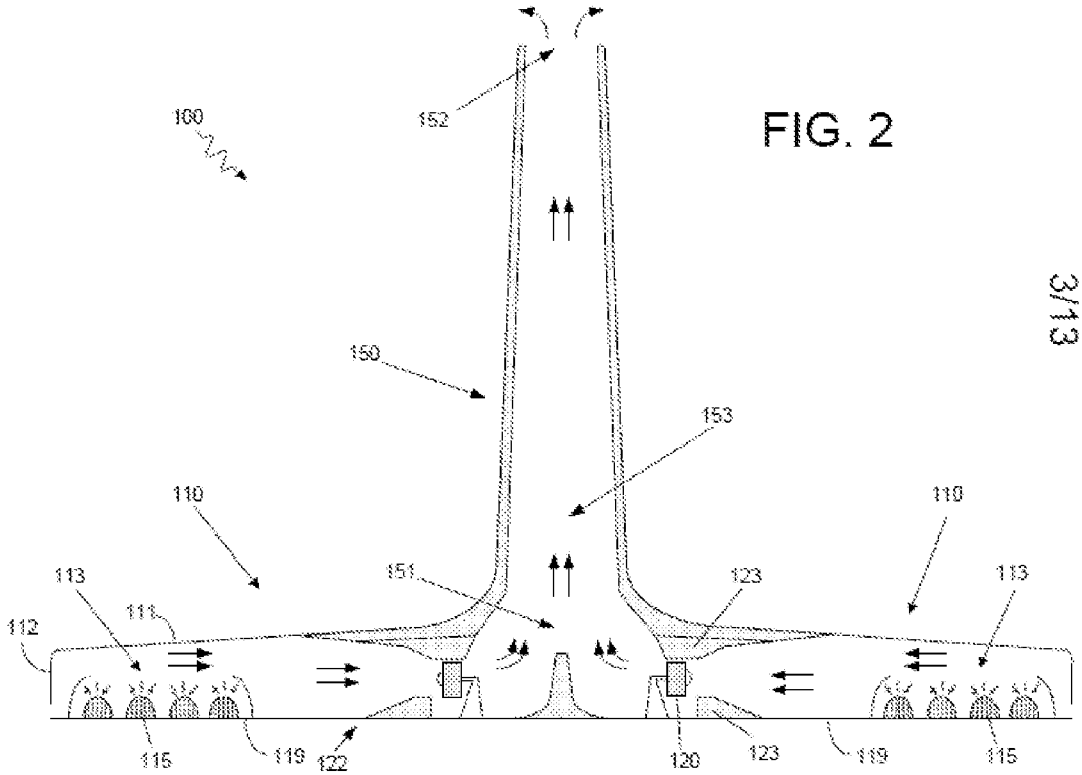

FIG. 2

A "compost updraft tower" power plant 100 is shown above having a large "collector region" 110 and a chimney/tower 150. The collector region 110 houses large amounts of **compostable matter 115, such as biomass, municipal solid waste**, and other compostable matter. The compostable matter 115 generates heat because of the composting process. This heats the air within the collector region 110. Moreover, the collector region 110 has a transparent roof 111 **that allows solar radiation from the Sun to penetrate and further heat the air** within the collector region 110. The heated air within the collector region 110 then travels toward the very tall chimney/tower 150 located near the center of the system and **generates electricity by powering turbine 120 blades**. The heated air is constricted by air constrictors 123 as it flows past the turbines 120, and up and through the chimney/tower 150. **Thus, the compost updraft tower utilizes biomass, municipal waste, and solar energry to generate electricity.**

Publication Fee Already Paid

Applicant submits that he has already paid the $300 publication fee on February 19, 2010 and therefore the fee is not required along with this petition. The application was published on September 2, 2010.

Conclusion

In conclusion, Applicant submits that the present application pertains to the development of renewable energy resources. For the foregoing reasons, Applicant requests that Application Serial No. 12/619,613 be advanced out of order under CFR § 1.102 for accelerated examination under the Pilot Program for Green Technologies.

Respectfully submitted,

Date: January 4, 2011

By: /Razmig H. Messerian/
Razmig H. Messerian, Reg. # 56,983

Loza & Loza, LLP
305 North Second Ave. #127
Upland, California 91786
Phone: (949) 737-9008
Fax: (949) 737-0675
Email: raz@lozaip.com

UNITED STATES PATENT AND TRADEMARK OFFICE

UNITED STATES DEPARTMENT OF COMMERCE
United States Patent and Trademark Office
Address: COMMISSIONER FOR PATENTS
P.O. Box 1450
Alexandria, Virginia 22313-1450
www.uspto.gov

APPLICATION NO.	FILING DATE	FIRST NAMED INVENTOR	ATTORNEY DOCKET NO.	CONFIRMATION NO.
12/619,613	11/16/2009	Henry Hovakimian	HOVAK.01A	8962

91624 7590 01/12/2011

Loza & Loza LLP
Raz Messerian, Esq.
305 North Second Avenue
#127
Upland, CA 91786-6064

EXAMINER	
PONOMARENKO, NICHOLAS	
ART UNIT	PAPER NUMBER
2839	

NOTIFICATION DATE	DELIVERY MODE
01/12/2011	ELECTRONIC

Please find below and/or attached an Office communication concerning this application or proceeding.

The time period for reply, if any, is set in the attached communication.

Notice of the Office communication was sent electronically on above-indicated "Notification Date" to the following e-mail address(es):

raz@lozaip.com
docketing@lozaip.com

UNITED STATES PATENT AND TRADEMARK OFFICE

Commissioner for Patents
United States Patent and Trademark Office
P.O. Box 1450
Alexandria, VA 22313-1450
www.uspto.gov

Loza & Loza LLP
Raz Messerian, Esq.
305 North Second Avenue
#127
Upland CA 91786-6064

In re Application of	:	
Henry HOVAKIMIAN	:	DECISION ON PETITION
Application No. 12/619,613	:	TO MAKE SPECIAL UNDER
Filed: November 16, 2009	:	THE GREEN TECHNOLOGY
Attorney Docket No. HOVAK.01A	:	PILOT PROGRAM

This is a decision on the petition under 37 CFR 1.102, filed February 19, 2010 and renewed on January 04, 2011, to make the above-identified application special under the pilot program for applications pertaining to Green Technologies as set forth 74 Federal Register Notice 64666 (December 8, 2009) and amended by 75 Federal Register Notice 28554 (May 21, 2010) and 75 Federal Register Notice 69049 (November 10, 2010).

The petition is **GRANTED**.

A grantable petition to make an application special under 37 CFR 1.102 and the pilot program as set forth in 74 FR 64666 must be directed to a nonprovisional application filed under 35 USC 111(a) or be a national stage entry under 35 USC 371, exclusive of any reissue applications.

In order to qualify for special status, the following requirements must be met. 1) The application must have no more than 3 independent claims and no more than 20 total claims. 2) The application must not contain any multiple dependent claims. 3) The petition must state the basis for seeking special status, i.e., the claimed invention either: A) materially enhances the quality of the environment or B) materially contributes to: i) the discovery or development of renewable energy resources, ii) the more efficient utilization and conservation of energy resources, or iii) greenhouse gas emission reduction. 4) If the disclosure is not clear on its face that the claimed invention materially contributes under category (A) or (B), the petition must be accompanied by a statement by the applicant, assignee, or an attorney/agent registered to practice before the Office explaining how the materiality standard is met. 5) A statement that applicant will agree to make an election without traverse in a telephonic interview if a restriction requirement is made by the examiner. 6) The petition to make special must be filed electronically. 7) The petition must be filed at least one day prior to the date that a first Office Action appears in the Patent Application Information Retrieval (PAIR) system. 8) The petition must be accompanied by a

request for early publication in compliance with 37 CFR 1.219 and include the publication fee as set forth in 37 CFR 1.18(d).

The requirement for a fee for consideration of the petition to make special for applications pertaining to Green Technologies has been waived.

The instant petition complies with items 1 – 8 above. Accordingly, the above-identified application has been accorded "special" status.

Telephone inquires concerning this decision should be directed to Lee W. Young at 571-272-4549.

The application is being forwarded to the Technology Center Art Unit 2839 for action in its regular turn.

Lee W. Young
Quality Assurance Specialist
Technology Center 2800

UNITED STATES PATENT AND TRADEMARK OFFICE

Commissioner for Patents
United States Patent and Trademark Office
P.O. Box 1450
Alexandria, VA 22313-1450
www.uspto.gov

JOHN RUSSELL UREN
2431 SIMPSON ROAD
RICHMOND BC V6X 2R2 CA CANADA

MAILED
DEC 03 2010
OFFICE OF PETITIONS

In re Application of	:	
Howard Heigh Malm	:	
Application No. 12/619,675	:	ON PETITION
Filed: November 16, 2009	:	
Attorney Docket No. REM10001CIP	:	

This is a decision on the petition under the unintentional provisions of 37 CFR 1.137(b), filed, October 27, 2010, to revive the above-identified application.

The petition is **GRANTED**.

The application became abandoned for failure to file a reply in a timely manner to the Notice to File Corrected Application Papers (Notice), mailed March 22, 2010. The Notice set a period for reply of two (2) months from the mail date of the Notice. No extensions of time under the provisions of 37 CFR 1.136(a) were obtained. Accordingly, the application became abandoned on May 23, 2010.

The petition satisfies the requirements of 37 CFR 1.137(b) in that petitioner has supplied (1) the reply in the form of replacement drawings, (2) the petition fee of $1,620, and (3) a proper statement of unintentional delay.

This application file is being referred to the Office of Patent Application Processing (OPAP) for further pre-examination processing.

Telephone inquiries concerning this decision should be directed to the undersigned at (571) 272-6059. Telephone inquiries related to OPAP processing should be directed to their hotline at (271) 272-4000.

A. Kelley

Alicia Kelley
Petitions Examiner
Office of Petitions

Doc code : PET.OP.AGE
Description : Petition to make special based on Age/Health

PTO/SB/130 (07-09)
Approved for use through 07/31/2012. OMB 0651- 0031
U.S. Patent and Trademark Office; U.S. DEPARTMENT OF COMMERCE
Under the Paperwork Reduction Act of 1995, no persons are required to respond to a collection of information unless it contains a valid OMB control number

PETITION TO MAKE SPECIAL BASED ON AGE FOR ADVANCEMENT OF EXAMINATION UNDER 37 CFR 1.102(c)(1)

Application Information

Application Number	12/619,675	Confirmation Number	9072	Filing Date	2009-11-16
Attorney Docket Number (optional)	REM10001cip	Art Unit	1733	Examiner	
First Named Inventor	Howard Leigh MALM				
Title of Invention	METHOD AND APPARATUS FOR PROCESSING DILUTED FUGITIVE GASES				

Attention: Office of Petitions

An application may be made special for advancement of examination upon filing of a petition showing that the applicant is 65 years of age, or more. No fee is required with such a petition. See 37 CFR 1.102(c)(1) and MPEP 708.02 (IV).

APPLICANT HEREBY PETITIONS TO MAKE SPECIAL FOR ADVANCEMENT OF EXAMINATION IN THIS APPLICATION UNDER 37 CFR 1.102(c)(1) and MPEP 708.02 (IV) ON THE BASIS OF THE APPLICANT'S AGE.

A grantable petition requires one of the following items:
(1) Statement by one named inventor in the application that he/she is 65 years of age, or more; or
(2) Certification by a registered attorney/agent having evidence such as a birth certificate, passport, driver's license, etc. showing one named inventor in the application is 65 years of age, or more.

Name of Inventor who is 65 years of age, or older

Given Name	Middle Name	Family Name	Suffix
Howard	Leigh	MALM	

A signature of the applicant or representative is required in accordance with 37 CFR 1.33 and 10.18. Please see 37 CFR 1.4(d) for the format of the signature.

Select (1) or (2) :

○ (1) I am an inventor in this application and I am 65 years of age, or more.

◉ (2) I am an attorney or agent registered to practice before the Patent and Trademark Office, and I certify that I am in possession of evidence, and will retain such in the application file record, showing that the inventor listed above is 65 years of age, or more.

Signature	/John Russell Uren/	Date (YYYY-MM-DD)	2011-01-25
Name	John Russell Uren	Registration Number	27530

PTO/SB/130 (07-09)
Approved for use through 07/31/2012. OMB 0651- 0031
U.S. Patent and Trademark Office; U.S. DEPARTMENT OF COMMERCE
Under the Paperwork Reduction Act of 1995, no persons are required to respond to a collection of information unless it contains a valid OMB control number

Privacy Act Statement

The Privacy Act of 1974 (P.L. 93-579) requires that you be given certain information in connection with your submission of the attached form related to a patent application or patent. Accordingly, pursuant to the requirements of the Act, please be advised that: (1) the general authority for the collection of this information is 35 U.S.C. 2(b)(2); (2) furnishing of the information solicited is voluntary; and (3) the principal purpose for which the information is used by the U.S. Patent and Trademark Office is to process and/or examine your submission related to a patent application or patent. If you do not furnish the requested information, the U.S. Patent and Trademark Office may not be able to process and/or examine your submission, which may result in termination of proceedings or abandonment of the application or expiration of the patent.

The information provided by you in this form will be subject to the following routine uses:

1. The information on this form will be treated confidentially to the extent allowed under the Freedom of Information Act (5 U.S.C. 552) and the Privacy Act (5 U.S.C. 552a). Records from this system of records may be disclosed to the Department of Justice to determine whether the Fr eedom of Information Act requires disclosure of these records.

2. A record from this system of records may be disclosed, as a routine use, in the course of presenting evidence to a court, magistrate, or administrative tribunal, including disclosures to opposing counsel in the course of settlement negotiations.

3. A record in this system of records may be disclosed, as a routine use, to a Member of Congress submitting a request involving an individual, to whom the record pertains, when the individual has requested assistance from the Member with respect to the subject matter of the record.

4. A record in this system of records may be disclosed, as a routine use, to a contractor of the Agency having need for the information in order to perform a contract. Recipients of information shall be required to comply with the requirements of the Privacy Act of 1974, as amended, pursuant to 5 U.S.C. 552a(m).

5. A record related to an International Application filed under the Patent Cooperation Treaty in this system of records may be disclosed, as a routine use, to the International Bureau of the World Intellectual Property Organization, pursuant to the Patent Cooperation Treaty.

6. A record in this system of records may be disclosed, as a routine use, to another federal agency for purposes of National Security review (35 U.S.C. 181) and for review pursuant to the Atomic Energy Act (42 U.S.C. 218(c)).

7. A record from this system of records may be disclosed, as a routine use, to the Administrator, General Services, or his/her designee, during an inspection of records conducted by GSA as part of that agency's responsibility to recommend improvements in records management practices and programs, under authority of 44 U.S.C. 2904 and 2906. Such disclosure shall be made in accordance with the GSA regulations governing inspection of records for this purpose, and any other relevant (i.e., GSA or Commerce) directive. Such disclosure shall not be used to make determinations about indivi duals.

8. A record from this system of records may be disclosed, as a routine use, to the public after either publication of the application pursuant to 35 U.S.C. 122(b) or issuance of a patent pursuant to 35 U.S.C. 151. Further, a record may be disclosed, subject to the limitations of 37 CFR 1.14, as a routine use, to the public if the record was filed in an application which became abandoned or in which the proceedings were terminated and which application is referenced by either a published application, an application open to public inspections or an issued patent.

9. A record from this system of records may be disclosed, as a routine use, to a Federal, State, or local law enforcement agency, if the USPTO becomes aware of a violation or potential violation of law or regulation.

UNITED STATES PATENT AND TRADEMARK OFFICE

Commissioner for Patents
United States Patent and Trademark Office
P.O. Box 1450
Alexandria, VA 22313-1450
www.uspto.gov

In re Application of
Howard Leigh MALM

Application No. 12619675

Filed: November 16,2009

Attorney Docket No. REM10001cip

:DECISION ON PETITION TO MAKE SPECIAL
:UNDER 37 CFR 1.102(c)(1)

This is a decision on the electronic petition under 37 CFR 1.102 (c)(1), filed 28-JAN-2011 to make the above-identified application special based on applicant's age as set forth in MPEP § 708.02, Section IV.

The petition is **GRANTED**.

A grantable petition to make an application special under 37 CFR 1.102(c)(1), MPEP § 708.02, Section IV: Applicant's Age must include a statement by applicant or a registered practitioner having evidence that applicant is at least 65 years of age. No fee is required.

Accordingly, the above-identified application has been accorded "special" status and will be taken up for action by the examiner upon the completion of all pre-examination processing.

Telephone inquiries concerning this electronic decision should be directed to the Electronic Business Center at 866-217-9197.

All other inquiries concerning either the examination or status of the application should be directed to the Technology Center.

UNITED STATES PATENT AND TRADEMARK OFFICE

UNITED STATES DEPARTMENT OF COMMERCE
United States Patent and Trademark Office
Address: COMMISSIONER FOR PATENTS
P.O. Box 1450
Alexandria, Virginia 22313-1450
www.uspto.gov

APPLICATION NO.	FILING DATE	FIRST NAMED INVENTOR	ATTORNEY DOCKET NO.	CONFIRMATION NO.
12/619,701	11/17/2009	Kozo Ogawa	029907-000076	9125

7590 06/01/2011

DLA PIPER LLP US
P. O. BOX 2758
RESTON, VA 20195

EXAMINER	
CRANSON JR, JAMES W	
ART UNIT	PAPER NUMBER
2875	
MAIL DATE	DELIVERY MODE
06/01/2011	PAPER

DECISION GRANTING PETITION UNDER 37 CFR 1.138(d)

The declaration of express abandonment is recognized

This is in response to the petition under 37 CFR 1.138(d), requesting for a refund of any previously paid search fee and excess claims fee in the above-identified application.

The petition is granted.

The express abandonment is recognized. Any previously paid search fee and excess claims fee are hereby refunded.

Telephone inquiries should be directed to the Office of Data Management at (571) 272-4200.

Patent Publication Branch
Office of Data Management

UNITED STATES PATENT AND TRADEMARK OFFICE

Commissioner for Patents
United States Patent and Trademark Office
P.O. Box 1450
Alexandria, VA 22313-1450
www.uspto.gov

SARFARAZ K. NIAZI
Sarfaraz K. Niazi
20 RIVERSIDE DRIVE
111 Pfingsten Road, Suite 105
DEERFIELD IL 60015

MAILED
NOV 16 2011
OFFICE OF PETITIONS

In re Application of	:	
Naila Yaqoob et al.	:	
Application No. 12/619,853	:	DECISION ON PETITION
Filed: November 17, 2009	:	
Attorney Docket No. 2009-NAILA	:	

This is a decision on the petition under the unintentional provisions of 37 CFR 1.137(b), filed October 19, 2011, to revive the above-identified application.

The petition is **GRANTED**.

This application became abandoned for failure to timely pay the issue and publication fees on or before September 16, 2011, as required by the Notice of Allowance and Fee(s) Due, mailed June 16, 2011. Accordingly, the date of abandonment of this application is September 17, 2011. A Notice of Abandonment was mailed on October 3, 2011.

The petition satisfies the requirements of 37 CFR 1.137(b) in that petitioner has supplied (1) the reply in the form of payment of the issue fee of $870 and the publication fee of $300, (2) the petition fee of $930, and (3) a proper statement of unintentional delay. Accordingly, the issue and publication fees are accepted as being unintentionally delayed.

37 CFR 1.137(b)(3) requires a statement that "the entire delay in filing the required reply from the due date for the reply until the filing of a grantable petition pursuant to 37 CFR 1.137(b) was unintentional." Since the statement appearing in the petition varies from the language required by 37 CFR 1.137(b)(3), the statement is being construed as the required statement. Petitioner must notify the Office if this is **not** a correct reading of the statement appearing in the petition.

Telephone inquiries concerning this decision should be directed to Kimberly Inabinet at (571) 272-4618.

This application is being referred to the Office of Data Management for further processing into a patent.

/Kimberly A. Inabinet/

Kimberly A. Inabinet
Petitions Examiner
Office of Petitions

UNITED STATES PATENT AND TRADEMARK OFFICE

Commissioner for Patents
United States Patent and Trademark Office
P.O. Box 1450
Alexandria, VA 22313-1450
www.uspto.gov

STEPTOE & JOHNSON LLP
1330 CONNECTICUT AVENUE, N.W.
WASHINGTON DC 20036

MAILED

JUN 29 2011

OFFICE OF PETITIONS

In re Application of :
Rounbehler et al. :
Application No. 12/619,959 : ON PETITION
Filed: November 17, 2009
Attorney Docket No. 16250.0009 C1 :
:

This is a decision on the petition under 37 CFR 1.102(c)(1), filed June 8, 2011, to make the above-identified application special based on applicant's age as set forth in M.P.E.P. § 708.02, Section IV.

The petition is **GRANTED**.

A grantable petition to make an application special under 37 CFR 1.102(c)(1) and MPEP § 708.02, Section IV: Applicant's Age must be accompanied by evidence showing that at least one of the applicants is 65 years of age, or more, such as a birth certificate or a statement by applicant. No fee is required

The instant petition includes a statement by applicant's attorney that applicant is 65 years of age and a statement (PTO/SB/130 form) by the applicant that applicant is 65 years of age. Accordingly, the above-identified application has been accorded "special" status.

Telephone inquiries concerning this decision should be directed to the undersigned at 571-272-7751. All other inquiries concerning either the examination or status of the application should be directed to the Technology Center.

This matter is being referred to the Technology Center Art Unit 1771 for action on the merits commensurate with this decision.

/Joan Olszewski/
Joan Olszewski
Petitions Examiner
Office of Petitions

UNITED STATES PATENT AND TRADEMARK OFFICE

OCT 0 8 2010

Commissioner for Patents
United States Patent and Trademark Office
P.O. Box 1450
Alexandria, VA 22313-1450
www.uspto.gov

WOOD, HERRON & EVANS, LLP
2700 CAREW TOWER
441 VINE STREET
CINCINNATI OH 45202

In re application of	:	**DECISION ON REQUEST TO**
Jonas Kristensen	:	**PARTICIPATE IN PATENT**
Application No. 12/619,992	:	**PROSECUTION HIGHWAY**
Filed: November 17, 2009	:	**PROGRAM AND PETITION**
For: TOWER, A WIND TURBINE AND A METHOD FOR ARRANGING A PLATFORM INSIDE A TOWER	:	**TO MAKE SPECIAL UNDER 37 CFR 1.102(d)**

This is a decision on the request to participate in the Patent Prosecution Highway (PPH) program and the petition under 37 CFR 1.102(a), filed September 02, 2010, to make the above-identified application special.

The request and petition are **DISMISSED**.

A grantable request to participate in the PPH pilot program and petition to make special require:

(1) The U.S. application must validly claim priority under 35 U.S.C. 119(a) to one or more applications filed in the DKPTO;
(2) Applicant must submit a copy of the allowable/patentable claim(s) from the DKPTO application(s) along with an English translation thereof and a statement that the English translation is accurate;
(3) All the claims in the U.S. application must sufficiently correspond or be amended to sufficiently correspond to the allowable/patentable claim(s) in the DKPTO application(s);
(4) Examination of the U.S. application has not begun;
(5) Applicant must submit a copy of the latest Office action from each of the DKPTO application(s) containing the allowable/patentable claim(s) along with an English translation thereof and a statement that the English translation is accurate;
(6) Applicant must submit an IDS listing the documents cited by the DKPTO examiner in the DKPTO Office action along with copies of documents except U.S. patents or U.S. patent application publications.

The request to participate in the PPH pilot program and petition fail to include:

(3) All the claims in the U.S. application must sufficiently correspond or be amended to sufficiently correspond to the allowable/patentable claim(s) in the DKPTO application(s);

Claim 1 in the U.S. application not sufficiently correspond to claim 1 of the allowable claim 1 of the PA 2008 01594 application. Specifically, it looks like claim 1, lines 7 -12 contains modified language such as "wherein the one or more platforms are suspended by the tensile load carrying members while at least one ladder is attached to the platforms and the at least one ladder is stabilized in the horizontal direction by transversal tensile load carrying members extending from the ladder to the tensile load carrying members that are vertically arranged between the upper and lower flanges". These changes alter the scope of the claim resulting in it not sufficiently corresponding to claim 1 of the PA 2008 01594 application.
Method claim 10 in the U.S. application also not correspond to claim 10 or claim 12 of the PA 2008 01594 application.
Note, there are 15 claims in the PA 2008 01594 application; while there are only 10 claims in the U.S. application.

Applicant is given a time period of **ONE MONTH or THIRTY DAYS**, whichever is longer, to correct the deficiencies. **NO EXTENSION OF TIME UNDER 37 CFR 1.136 IS PERMITTED.** If the deficiencies are not corrected with the time period given, the application will await action in its regular turn. All replies to a decision to dismiss must be submitted by EFS-Web using the document description "Petition to make special under Patent Prosecution Highway."

Any inquiry regarding this decision should be directed to Mikado Buiz, Quality Assurance Specialist, at (571) 272-6578.

/ Mikado Buiz /

Mikado Buiz,
Quality Assurance Specialist
Technology Center 3600

MB/MB: 10/07/10

UNITED STATES PATENT AND TRADEMARK OFFICE

UNITED STATES DEPARTMENT OF COMMERCE
United States Patent and Trademark Office
Address: COMMISSIONER FOR PATENTS
P.O. Box 1450
Alexandria, Virginia 22313-1450
www.uspto.gov

APPLICATION NO.	FILING DATE	FIRST NAMED INVENTOR	ATTORNEY DOCKET NO.	CONFIRMATION NO.
12/619,992	11/17/2009	Jonas Kristensen	VWS-15US	9704

26875 7590 12/20/2010

WOOD, HERRON & EVANS, LLP
2700 CAREW TOWER
441 VINE STREET
CINCINNATI, OH 45202

EXAMINER	
KWIECINSKI, RYAN D	

ART UNIT	PAPER NUMBER
3635	

MAIL DATE	DELIVERY MODE
12/20/2010	PAPER

Please find below and/or attached an Office communication concerning this application or proceeding.

The time period for reply, if any, is set in the attached communication.

UNITED STATES PATENT AND TRADEMARK OFFICE

Commissioner for Patents
United States Patent and Trademark Office
P.O. Box 1450
Alexandria, VA 22313-1450
www.uspto.gov

DEC 2 0 2010

WOOD, HERRON & EVANS, LLP
2700 CAREW TOWER
441 VINE STREET
CINCINNATI OH 45202

In re application of
Jonas Kristensen
Application No. 12/619,992
Filed: November 17, 2009
For: TOWER, A WIND TURBINE AND A METHOD FOR ARRANGING A PLATFORM INSIDE A TOWER

: **DECISION ON REQUEST TO PARTICIPATE IN PATENT PROSECUTION HIGHWAY PROGRAM AND PETITION TO MAKE SPECIAL UNDER 37 CFR 1.102(a)**

This is a decision on the renewed request to participate in the Patent Prosecution Highway (PPH) program and the petition under 37 CFR 1.102(a), filed November 5, 2010, to make the above-identified application special.

The request and petition are **GRANTED**.

A grantable request to participate in the PPH pilot program and petition to make special require:

(1) The U.S. application must validly claim priority under 35 U.S.C. 119(a) to one or more applications filed in the DKPTO;
(2) Applicant must submit a copy of the allowable/patentable claim(s) from the DKPTO application(s) along with an English translation thereof and a statement that the English translation is accurate;
(3) All the claims in the U.S. application must sufficiently correspond or be amended to sufficiently correspond to the allowable/patentable claim(s) in the DKPTO application(s);
(4) Examination of the U.S. application has not begun;
(5) Applicant must submit a copy of the latest Office action from each of the DKPTO application(s) containing the allowable/patentable claim(s) along with an English translation thereof and a statement that the English translation is accurate;
(6) Applicant must submit an IDS listing the documents cited by the DKPTO examiner in the DKPTO Office action along with copies of documents except U.S. patents or U.S. patent application publications.

In light of renewed petition, filed on November 5, 2010, the request to participate in the PPH program complies with the above requirements. Therefore, the above-identified application has been accorded "special" status.

All other inquiries concerning the examination or status of the application should be directed to the Patent Application Information Retrieval (PAIR) system.

The application is being forwarded to the examiner for action on the merits commensurate with this decision.

Any inquiry regarding this decision should be directed to Mikado Buiz, Quality Assurance Specialist, at (571) 272-6578.

/ Mikado Buiz /

Mikado Buiz,
Quality Assurance Specialist
Technology Center 3600

MB/MB: 12/17/10

UNITED STATES PATENT AND TRADEMARK OFFICE

Commissioner for Patents
United States Patent and Trademark Office
P.O. Box 1450
Alexandria, VA 22313-1450
www.uspto.gov

Feigin & Associates, LLC
103 The Circle
(http://PatentLawNY.com)
Passaic NJ 07055

MAILED
FEB 13 2012
OFFICE OF PETITIONS

In re Application of :
Feigin et al. :
Application No. 12/620,012 : NOTICE
Filed: November 17, 2009 :
Attorney Docket No. GEO001 :

This is a notice regarding your request for acceptance of a fee deficiency submission under 37 CFR 1.28(c), filed January 17, 2012.

The Office no longer investigates or rejects original or reissue applications under 37 CFR 1.56. **1098 Off. Gaz. Pat. Office 502 (January 3, 1989)**. Therefore, nothing in this Notice is intended to imply that an investigation was done.

Your fee deficiency submission under 37 CFR 1.28(c) is hereby **ACCEPTED**.

This application is no longer entitled to small entity status. Accordingly, all future fees paid in this application must be paid at the large entity rate.

Inquiries related to this communication should be directed to the undersigned at (571) 272-3230.

Shirene Willis Brantley

Shirene Willis Brantley
Senior Petitions Attorney
Office of Petitions

UNITED STATES PATENT AND TRADEMARK OFFICE

UNITED STATES DEPARTMENT OF COMMERCE
United States Patent and Trademark Office
Address: COMMISSIONER FOR PATENTS
P.O. Box 1450
Alexandria, Virginia 22313-1450
www.uspto.gov

APPLICATION NO.	FILING DATE	FIRST NAMED INVENTOR	ATTORNEY DOCKET NO.	CONFIRMATION NO.
12/620,017	11/17/2009	Daniel Hanson	33859-US-PAT (85128)	9753

89137 7590 01/04/2011

Allen, Dyer, Doppelt, Milbrath & Gilchrist - RIM
255 S. Orange Avenue
Suite 1401
Orlando, FL 32801

EXAMINER	
BOST, DWAYNE D	

ART UNIT	PAPER NUMBER
2617	

NOTIFICATION DATE	DELIVERY MODE
01/04/2011	ELECTRONIC

Please find below and/or attached an Office communication concerning this application or proceeding.

The time period for reply, if any, is set in the attached communication.

Notice of the Office communication was sent electronically on above-indicated "Notification Date" to the following e-mail address(es):

creganoa@addmg.com
portfolioprosecution@rim.com

UNITED STATES PATENT AND TRADEMARK OFFICE

Commissioner for Patents
United States Patent and Trademark Office
P.O. Box 1450
Alexandria, VA 22313-1450
www.uspto.gov

Allen, Dyer, Doppelt, Milbrath & Gilchrist - RIM
255 S. Orange Avenue
Suite 1401
Orlando FL 32801

In re application of :
HANSON, DANIEL :
Application Serial No. 12/620,017 :
Filed: November 17, 2009 :
For: **MOBILE WIRELESS COMMUNICATIONS DEVICE DISPLAYING TEXTUAL CONTENT USING RAPID SERIAL VISUAL PRESENTATION AND ASSOCIATED METHODS** :

DECISION
ON PETITION

This is a response to the petition under 37 CFR 1.59, filed July 12, 2010, to expunge information from the above identified application.

The decision on the petition will be held in abeyance until prosecution on the merits is closed, at which time the petition will be decided.

Petitioner requests that the information submitted in an Information Disclosure Statement filed January 20, 2010 be expunged from the record. Petitioner states that the Information Disclosure Statement was unintentionally submitted, and the information has not otherwise been made public. The petition fee set forth in 37 CFR 1.17(h) has been paid.

The decision on the petition is held in abeyance because prosecution on the merits is not closed. Accordingly, it is not appropriate to make a final determination of whether or not the material requested to be expunged is "material", with "materiality" being defined as any information which the examiner considers as being important to a determination of patentability of the claims. Thus, the decision on the petition to expunge must be held in abeyance at this time.

During prosecution on the merits, the examiner will determine whether or not the identified document is considered to be "material". If the information is not considered by the examiner to be material, the information will be returned to applicant.

The document(s) in question will not be available to the public during prosecution.

Kenneth A. Wieder
Quality Assurance Specialist
Technology Center 2600
Communications

UNITED STATES PATENT AND TRADEMARK OFFICE

Commissioner for Patents
United States Patent and Trademark Office
P.O. Box 1450
Alexandria, VA 22313-1450
www.uspto.gov

FOLEY AND LARDNER LLP
SUITE 500
3000 K STREET NW
WASHINGTON DC 20007

MAILED

APR 09 2012

OFFICE OF PETITIONS

In re Application of
Nobuhiko ANDO et al.
Application No.: 12/620,025
Filed: November 17, 2009
Attorney Docket No.: 093704-0129

: DECISION ON REQUEST TO
: PARTICIPATE IN THE PATENT
: PROSECUTION HIGHWAY
: PROGRAM AND PETITION
: TO MAKE SPECIAL UNDER
: 37 CFR 1.102(a)

This is a decision on the request to participate in the Patent Prosecution Highway (PPH) program and the petition under 37 CFR 1.102(a), filed March 08, 2012, to make the above-identified application special.

The request and petition are **GRANTED**.

DISCUSSION

A grantable request to participate in the PPH pilot program and petition to make special require:

1. The U.S. application is
    a. a Paris Convention application which either
        i. validly claims priority under 35 U.S.C. 119(a) and 37 CFR 1.55 to one or more applications filed in the JPO, or
        ii. validly claims priority to a PCT application that contains no priority claims, or
    b. a national stage application under the PCT (an application which entered the national stage in the U.S. from a PCT international application after compliance with 35 U.S.C. 371), which PCT application
        i. validly claims priority to an application filed in the JPO, or
        ii. validly claims priority to a PCT application that contains no priority claims, or
        iii. contains no priority claim, or
    c. a so-called bypass application filed under 35 U.S.C. 111(a) which validly claims benefit under 35 U.S.C. 120 to a PCT application, which PCT application
        i. validly claims priority to an application filed in the JPO, or
        ii. validly claims priority to a PCT application that contains no priority claims, or
        iii. contains no priority claim;
2. Applicant must:
    a. Ensure all the claims in the U.S. application must sufficiently correspond or be amended to sufficiently correspond to the allowable/patentable claim(s) in the JPO application(s) and
    b. Submit a claims correspondence table in English;

3. Examination of the U.S. application has not begun;
4. Applicant must submit:
    a. Documentation of prior office action:
        i. a copy of the office action(s) just prior to the "Decision to Grant a Patent" from each of the JPO application(s) containing the allowable/patentable claim(s) or
        ii. if the allowable/patentable claims(s) are from a "Notification of Reasons for Refusal" then the Notification of Reasons for Refusal or
        iii. if the JPO application is a first action allowance then no office action from the JPO is necessary should be indicated on the request/petition form;
    b. An English language translation of the JPO Office action from (5)(a)(i)-(ii) above
5. Applicant must submit:
    a. An IDS listing the documents cited by the JPO examiner in the JPO office action (unless already submitted in this application)
    b. Copies of the documents except U.S. patents or U.S. patent application publications (unless already submitted in this application);

The request to participate in the PPH pilot program and petition comply with the above requirements. Accordingly, the above-identified application has been accorded "special" status.

Telephone inquiries concerning this decision should be directed to Michelle R. Eason at (571) 272-4231.

All other inquiries concerning the examination or status of the application is accessible in the PAIR system at http://www.uspto.gov/ebc.index.html.

This application will be forwarded to the examiner for action on the merits commensurate with this decision once this application's formality reviews have been completed.

/Thurman K Page/

Thurman K. Page
Petitions Examiner
Office of Petitions

UNITED STATES PATENT AND TRADEMARK OFFICE

Commissioner for Patents
United States Patent and Trademark Office
P.O. Box 1450
Alexandria, VA 22313-1450
www.uspto.gov

Feigin & Associates, LLC
103 The Circle
Passaic, NJ 07055

MAILED

FEB 09 2012

OFFICE OF PETITIONS

In re Patent of Feigin et al. :
Patent No. 7,982,657 :
Issue Date: July 19, 2011 :
Application No. 12/620,036 :
Filing Date: November 17, 2009 :
Attorney Docket No. GEO 002 :

Letter

This is a notice regarding the request for acceptance of a fee deficiency submission under 37 CFR 1.28(c) filed January 17, 2012.

The deficiency payment of $1,495 is hereby accepted.

The change of status to large entity has been entered and made of record.

Telephone inquiries regarding this communication should be directed to Petitions Attorney Steven Brantley at (571) 272-3203.

Charles Steven Brantley
Senior Petitions Attorney
Office of Petitions

UNITED STATES PATENT AND TRADEMARK OFFICE

Commissioner for Patents
United States Patent and Trademark Office
P.O. Box 1450
Alexandria, VA 22313-1450
www.uspto.gov

DARIN DUNCAN
843 WEST 42ND ST.
HOUSTON, TX 77018

MAILED

FEB 10 2011

OFFICE OF PETITIONS

In re Application of :
Darin Jason Duncan :
Application No. 12/620,048 : ON PETITION
Filed: November 17, 2009 :
Attorney Docket No. :

This is a decision on the petition under 37 CFR 1.137(b), filed January 4, 2011 and supplemented on January 10, 2011, to revive the above-identified application.

The petition is **GRANTED.**

The above-identified application became abandoned for failure to reply in a timely manner to the Notice To File Missing Parts of Nonprovisional Application (Notice) mailed November 30, 2009. The Notice set a period for reply of two (2) months from the mail date of the Notice. No extension of time under the provisions of 37 CFR 1.136(a) was obtained. Accordingly, the above-identified application became abandoned on January 31, 2010.

Telephone inquiries concerning this decision should be directed to Irvin Dingle at (571) 272-3210.

This matter is being referred to the Office of Patent Application Processing.

Irvin Dingle
Petitions Examiner
Office of Petitions

UNITED STATES PATENT AND TRADEMARK OFFICE

Commissioner for Patents
United States Patent and Trademark Office
P.O. Box 1450
Alexandria, VA 22313-1450
www.uspto.gov

MAIL
AUG 12 2010
DIRECTOR'S OFFICE
TECHNOLOGY CENTER 2600

Allen, Dyer, Doppelt, Milbrath & Gilchrist - RIM
255 S. Orange Avenue
Suite 1401
Orlando FL 32801

In re Application of
HANSON, DANIEL
Appl. No.: 12/620,052
Filed: November 17, 2009
For: **MOBILE WIRELESS COMMUNICATIONS DEVICE DISPLAYING TEXTUAL CONTENT BY VARYING FONTS USING RAPID SERIAL VISUAL PRESENTATION AND ASSOCIATED METHODS**

DECISION ON PETITION UNDER 37 CFR 1.59

This is a decision on the petition filed July 12, 2010 to expunge information from the above identified application pursuant to 37 CFR 1.59(b).

The petition is **Granted**.

Petitioner requests that the Information Disclosure Statement filed January 20, 2010 be expunged from the record. Petitioner states that the information submitted was unintentionally submitted and the failure to obtain its return would cause irreparable harm to the party who submitted the information or to the party in interest on whose behalf the information was submitted, and the information has not otherwise been made public. The petition fee set forth in 37 CFR 1.17(h) has been paid.

Applicant is required to retain the expunged material(s) for the life of any patent which issues on the above-identified application.

The expunged material has been closed from the electronic file.

/Michael Horabik/

Michael Horabik
Quality Assurance Specialist
Technology Center 2600
Communications

Doc Code: PET.AUTO Document Description: Petition automatically granted by EFS-Web	PTO/SB/140 U.S. Patent and Trademark Office Department of Commerce

Electronic Petition Request	**PETITION TO WITHDRAW AN APPLICATION FROM ISSUE AFTER PAYMENT OF THE ISSUE FEE UNDER 37 CFR 1.313(c)**
Application Number	12620112
Filing Date	17-Nov-2009
First Named Inventor	Nobuyoshi SAITO
Art Unit	2826
Examiner Name	TAN TRAN
Attorney Docket Number	350877US2RD
Title	THIN FILM TRANSISTOR, METHOD FOR MANUFACTURING SAME, DISPLAY DEVICE, AND METHOD FOR MANUFACTURING SAME

An application may be withdrawn from issue for further action upon petition by the applicant. To request that the Office withdraw an application from issue, applicant must file a petition under this section including the fee set forth in § 1.17(h) and a showing of good and sufficient reasons why withdrawal of the application from issue is necessary.

APPLICANT HEREBY PETITIONS TO WITHDRAW THIS APPLICATION FROM ISSUE UNDER 37 CFR 1.313(c).

A grantable petition requires the following items:
(1) Petition fee; and
(2) One of the following reasons:
(a) Unpatentability of one or more claims, which must be accompanied by an unequivocal statement that one or more claims are unpatentable, an amendment to such claim or claims, and an explanation as to how the amendment causes such claim or claims to be patentable;
(b) Consideration of a request for continued examination in compliance with § 1.114 (for a utility or plant application only); or
(c) Express abandonment of the application. Such express abandonment may be in favor of a continuing application, but not a CPA under 37 CFR 1.53(d).

Petition Fee

☐ Applicant claims SMALL ENTITY status. See 37 CFR 1.27.

☐ Applicant is no longer claiming SMALL ENTITY status. See 37 CFR 1.27(g)(2).

☐ Applicant(s) status remains as SMALL ENTITY.

☒ Applicant(s) status remains as other than SMALL ENTITY

Reason for withdrawal from issue

○ One or more claims are unpatentable ◉ Consideration of a request for continued examination (RCE) (List of Required Documents and Fees) ○ Applicant hereby expressly abandons the instant application (any attorney/agent signing for this reason must have power of attorney pursuant to 37 CFR 1.32(b)).	
RCE request,submission, and fee. ☐ I certify, in accordance with 37 CFR 1.4(d)(4) that : The RCE request ,submission, and fee have already been filed in the above-identified application on ☒ Are attached.	
THIS PORTION MUST BE COMPLETED BY THE SIGNATORY OR SIGNATORIES I certify, in accordance with 37 CFR 1.4(d)(4) that I am: ◉ An attorney or agent registered to practice before the Patent and Trademark Office who has been given power of attorney in this application. ○ An attorney or agent registered to practice before the Patent and Trademark Office, acting in a representative capacity. ○ A sole inventor ○ A joint inventor; I certify that I am authorized to sign this submission on behalf of all of the inventors ○ A joint inventor; all of whom are signing this e-petition ○ The assignee of record of the entire interest that has properly made itself of record pursuant to 37 CFR 3.71	
Signature	/Carl E. Schlier/
Name	Carl E. Schlier
Registration Number	34426

UNITED STATES PATENT AND TRADEMARK OFFICE

Commissioner for Patents
United States Patent and Trademark Office
P.O. Box 1450
Alexandria, VA 22313-1450
www.uspto.gov

Decision Date : March 9, 2012

In re Application of :

Nobuyoshi SAITO

DECISION ON PETITION

UNDER CFR 1.313(c)(2)

Application No : 12620112

Filed : 17-Nov-2009

Attorney Docket No : 350877US2RD

This is an electronic decision on the petition under 37 CFR 1.313(c)(2), filed March 9, 2012 , to withdraw the above-identified application from issue after payment of the issue fee.

The petition is **GRANTED.**

The above-identified application is withdrawn from issue for consideration of a submission under 37 CFR 1.114 (request for continued examination). See 37 CFR 1.313(c)(2).

Petitioner is advised that the issue fee paid in this application cannot be refunded. If, however, this application is again allowed, petitioner may request that it be applied towards the issue fee required by the new Notice of Allowance.

Telephone inquiries concerning this decision should be directed to the Patent Electronic Business Center (EBC) at 866-217-9197.

This application file is being referred to Technology Center AU 2826 for processing of the request for continuing examination under 37 CFR 1.114 .

Office of Petitions

UNITED STATES PATENT AND TRADEMARK OFFICE

Commissioner for Patents
United States Patent and Trademark Office
P.O. Box 1450
Alexandria, VA 22313-1450
www.uspto.gov

ST. ONGE STEWARD JOHNSTON & REENS, LLC
986 BEDFORD STREET
STAMFORD CT 06905-5619

MAILED

DEC 14 2010

OFFICE OF PETITIONS

In re Application of :
Wesley W. Whitmyer, Jr. :
Application No. 12/620,143 : NOTICE
Filed: November 17, 2009 :
Attorney Docket No. 03000-P0003E :

This is a notice regarding your request for acceptance of a fee deficiency submission under 37 CFR 1.28.

The Office no longer investigates or rejects original or reissue patent under 37 CFR 1.56. **1098 Off. Gaz. Pat. Office 502 (January 3, 1989)**. Therefore, nothing in this Notice is intended to imply that an investigation was done.

Your fee deficiency submission under 37 CFR 1.28 is hereby **ACCEPTED**.

This patent is no longer entitled to small entity status. Accordingly, all future fees paid in this patent must be paid at the large entity rate.

Inquiries related to this communication should be directed to the undersigned at (571) 272-2783.

/Tredelle D. Jackson/
Paralegal Specialist
Office of Petitions

UNITED STATES PATENT AND TRADEMARK OFFICE

Commissioner for Patents
United States Patent and Trademark Office
P.O. Box 1450
Alexandria, VA 22313-1450
www.uspto.gov

MAILED

DEC 15 2010

OFFICE OF PETITIONS

ST. ONGE STEWARD JOHNSTON & REENS, LLC
986 BEDFORD STREET
STAMFORD CT 06905-5619

In re Application of :
Wesley W. Whitmyer, Jr. :
Application No. 12/620,158 : NOTICE
Filed: November 17, 2009 :
Attorney Docket No. 03000-P0003F :

This is a notice regarding your request for acceptance of a fee deficiency submission under 37 CFR 1.28.

The Office no longer investigates or rejects original or reissue patent under 37 CFR 1.56. **1098 Off. Gaz. Pat. Office 502 (January 3, 1989)**. Therefore, nothing in this Notice is intended to imply that an investigation was done.

Your fee deficiency submission under 37 CFR 1.28 is hereby **ACCEPTED**.

This patent is no longer entitled to small entity status. Accordingly, all future fees paid in this patent must be paid at the large entity rate.

Inquiries related to this communication should be directed to the undersigned at (571) 272-2783.

/Tredelle D. Jackson/
Paralegal Specialist
Office of Petitions

UNITED STATES PATENT AND TRADEMARK OFFICE

Commissioner for Patents
United States Patent and Trademark Office
P.O. Box 1450
Alexandria, VA 22313-1450
www.uspto.gov

MAILED

JUL 18 2011

OFFICE OF PETITIONS

MALLOY & MALLOY
2800 S.W. THIRD AVENUE
HISTORIC CORAL WAY
MIAMI FL 33129

In re Application of :
Jorge Ivan Diaz-Oritz :
Application No. 12/620,171 : DECISION ON PETITION
Filed: November 17, 2009 : TO MAKE SPECIAL UNDER
Attorney Docket No. 1.912.10 : 37 CFR 1.102(c)(1)
:

This is a decision on the petition under 37 CFR 1.102(c)(1), filed June 22, 2011, to make the above-identified application special based on applicant's age as set forth in M.P.E.P. § 708.02, Section IV.

The petition is **GRANTED**.

A grantable petition to make an application special under 37 CFR 1.102(c)(1) and MPEP § 708.02, Section IV: Applicant's Age must be accompanied by evidence showing that at least one of the applicants is 65 years of age, or more, such as a birth certificate or a statement by applicant. No fee is required

The instant petition includes a statement from the applicant declaring that he is 65 years of age or older. Accordingly, the above-identified application has been accorded "special" status.

Telephone inquiries concerning this decision should be directed to Terri Johnson at 571-272-2991.

All other inquiries concerning either the examination or status of the application should be directed to the Technology Center.

The application is being forwarded to the Technology Center Art Unit 2841 for action on the merits commensurate with this decision.

/Terri Johnson/
Terri Johnson
Petitions Examiner
Office of Petitions

UNITED STATES PATENT AND TRADEMARK OFFICE

UNITED STATES DEPARTMENT OF COMMERCE
United States Patent and Trademark Office
Address: COMMISSIONER FOR PATENTS
P.O. Box 1450
Alexandria, Virginia 22313-1450
www.uspto.gov

APPLICATION NO.	FILING DATE	FIRST NAMED INVENTOR	ATTORNEY DOCKET NO.	CONFIRMATION NO.
12/620,298	11/17/2009	Jae Hwa Jin	0158-P0008A	1304

7590 08/17/2011

Hyun Jong Park
Park & Associates Intellectual Property Law LLC
Suite 106
265 Bic Drive
Milford, CT 06461

EXAMINER	
NOVOSAD, JENNIFER ELEANORE	
ART UNIT	PAPER NUMBER
3637	

MAIL DATE	DELIVERY MODE
08/17/2011	PAPER

Please find below and/or attached an Office communication concerning this application or proceeding.

The time period for reply, if any, is set in the attached communication.

UNITED STATES PATENT AND TRADEMARK OFFICE

Commissioner for Patents
United States Patent and Trademark Office
P.O. Box 1450
Alexandria, VA 22313-1450
www.uspto.gov

AUG 17 2011

Hyun Jong Park
Park & Associates Intellectual Property Law LLC
Suite 106
265 Bic Drive
Milford CT 06461

In re application of	:	**DECISION ON REQUEST TO**
Jin et al	:	**PARTICIPATE IN PATENT**
Application No. 12/620,298	:	**PROSECUTION HIGHWAY**
Filed: November 17, 2009	:	**PROGRAM AND PETITION**
For: SAMPLE STORAGE APPARATUS	:	**TO MAKE SPECIAL UNDER**
	:	**37 CFR 1.102(a)**

This is a decision on the request to participate in the Patent Prosecution Highway (PPH) program and the petition under 37 CFR 1.102(a), filed June 29, 2011, to make the above-identified application special.

The request and petition are **GRANTED**.

A grantable request to participate in the PPH program and petition to make special require:

(1) The U.S. application must validly claim priority under 35 U.S.C. 119(a) to one or more applications filed in the KIPO;
(2) Applicant must submit a copy of the allowable/patentable claim(s) from the KIPO application(s) along with an English translation thereof and a statement that the English translation is accurate;
(3) All the claims in the U.S. application must sufficiently correspond or be amended to sufficiently correspond to the allowable/patentable claim(s) in the KIPO application(s);
(4) Examination of the U.S. application has not begun;
(5) Applicant must submit a copy of the latest Office action from each of the KIPO application(s) containing the allowable/patentable claim(s) along with an English translation thereof and a statement that the English translation is accurate;
(6) Applicant must submit an IDS listing the documents cited by the KIPO examiner in the KIPO Office action along with copies of documents except U.S. patents or U.S. patent application publications.

The request to participate in the PPH pilot program complies with the above requirements. Therefore, the above-identified application has been accorded "special" status.

All other inquiries concerning the examination or status of the application should be directed to the Patent Application Information Retrieval (PAIR) system.

The application is being forwarded to the examiner for action on the merits commensurate with this decision.

Any inquiry regarding this decision should be directed to Mikado Buiz, Quality Assurance Specialist, at (571) 272-6578.

/ Mikado Buiz /

Mikado Buiz,
Quality Assurance Specialist
Technology Center 3600

MB/MB: 08/17/11

UNITED STATES PATENT AND TRADEMARK OFFICE

UNITED STATES DEPARTMENT OF COMMERCE
United States Patent and Trademark Office
Address: COMMISSIONER FOR PATENTS
P.O. Box 1450
Alexandria, Virginia 22313-1450
www.uspto.gov

APPLICATION NO.	FILING DATE	FIRST NAMED INVENTOR	ATTORNEY DOCKET NO.	CONFIRMATION NO.
12/620,318	11/17/2009	Takuya Ootani	8616P838	1338

8791 7590 11/05/2010

BLAKELY SOKOLOFF TAYLOR & ZAFMAN LLP
1279 OAKMEAD PARKWAY
SUNNYVALE, CA 94085-4040

EXAMINER	
ABEL JALIL, NEVEEN	
ART UNIT	**PAPER NUMBER**
2165	

MAIL DATE	DELIVERY MODE
11/05/2010	PAPER

Please find below and/or attached an Office communication concerning this application or proceeding.

The time period for reply, if any, is set in the attached communication.

UNITED STATES PATENT AND TRADEMARK OFFICE

Commissioner for Patents
United States Patent and Trademark Office
P.O. Box 1450
Alexandria, VA 22313-1450
www.uspto.gov

BLAKELY SOKOLOFF TAYLOR & ZAFMAN LLP
1279 OAKMEAD PARKWAY
SUNNYVALE CA 94085-4040

In re Application of: T. OOTANI
Filed: November 17, 2009
Docket No.: 8616P838
For: Electronic device, storage qnd allocation method for file system and, computer product
PPH SN: 12/620,318

DECISION ON REQUEST TO PARTICIPATE IN PATENT PROSECUTION HIGHWAY PILOT PROGRAM AND PETITION TO MAKE SPECIAL UNDER 37 CFR 1.102(a)

This is a decision on the request to participate in the Patent Prosecution Highway (PPH) program and the petition under 37 CFR 1.102(a), filed October 26, 2010 to make the above-identified application special.

The petition is **GRANTED.**

A grantable request to participate in the PPH program and petition to make special require:

(1) The U.S. application is
(a) a Paris Convention application which either
(i) validly claims priority under 35 U.S.C. 119(a) and 37 CFR 1.55 to one or more applications filed in the JPO, or
(ii) validly claims priority to a PCT application that contains no priority claims,

Or

(b) a national stage application under the PCT (an application which entered the national stage in the U.S. from a PCT international application after compliance with 35 U.S.C. 371), which PCT application
(i) validly claims priority to an application filed in the JPO, or
(ii) validly claims priority to a PCT application that contains no priority claims, or
(iii) contains no priority claim,

Or

(c) a so-called bypass application filed under 35 U.S.C. 111 (a) which validly claims benefit under 35 U.S.C. 120 to a PCT application, which PCT application
(i) validly claims priority to an application filed in the JPO, or

(ii) validly claims priority to a PCT application that contains no priority claims, or
(iii) contains no priority claim.

Where the JPO application that contains the allowable/patentable claims is not the same application for which priority is claimed in the U.S. application, applicant must identify the relationship between the JPO application that contains the allowable/patentable claims and the JPO priority application claimed in the U.S. application.

(2) Applicant must submit a copy of:
a. The allowable/patentable claim(s) from the JPO application(s) or if a copy of the allowable/patentable claims is available via the Dossier Access System (DAS) applicant may request the USPTO obtain a copy from the DAS, however if the USPTO is unable to obtain a copy from the DAS the applicant will be required to submit a copy;
b. An English translation of the allowable/patentable claim(s) and
c. A statement that the English translation is accurate;

Effective January 29, 2010, for a period of two years ending on January 28, 2012, the USPTO will accept claims written in dependent form in the U.S. application which are narrower in scope than the allowable/patentable claims in the Japanese application.

(3) Applicant must:
a. Ensure all the claims in the U.S. application must sufficiently correspond or be amended to sufficiently correspond to the allowable/patentable claim(s) in the JPO application(s) and
b. Submit a claims correspondence table in English;

(4) Examination of the U.S. application has not begun;

(5) Applicant must submit:
a. Documentation of prior office action:
i. a copy of the office action(s)just prior to the "Decision to Grant a Patent" from each of the JPO application(s) containing the allowable/patentable claim(s) or
ii. if the allowable/patentable claims(s) are from a "Notification of Reasons for Refusal" then the Notification of Reasons for Refusal or
iii. if the JPO application is a first action allowance then no office action from the JPO is necessary should be indicated on the request/petition form;

Further, if a copy of the documents from a above is available via the Dossier Access System (DAS) applicant may request the USPTO obtain a copy from the DAS, however if the USPTO is unable to obtain a copy from the DAS the applicant will be required to submit a copy;

b. An English language translation of the JPO Office action from (5)(a)(i)-(ii) above

c. A statement that the English translation is accurate;

Effective January 29, 2010, Applicants may submit a machine translation into the English language of the copy of the latest JPO office action just prior to the "Decision to Grant a Patent" (e.g., the latest "Notification of Reasons for Refusal") from each of the JPO application(s) containing the allowable/patentable claims that are the basis for the PPH request. The machine translation into the English language must be one that is provided by the JPO. That is, the machine translation into the English language cannot be one that is provided by a commercial service. Where a machine translation into the English language of the copy of the latest JPO office action (obtained from the JPO) is submitted, it will not be necessary to include a statement that the English translation is accurate.

(6) Applicant must submit:
   a. An IDS listing the documents cited by the JPO examiner in the JPO office action (unless already submitted in this application)
   b. Copies of the documents except U.S. patents or U.S. patent application publications (unless already submitted in this application);

The petition is **GRANTED.**

The request to participate in the PPH pilot program and petition are found to comply with the above requirements. Accordingly, the above-identified application has been accorded "special" status.

Telephone inquiries concerning this decision should be directed to Mano Padmanabhan at 571-272-4210.

All other inquiries concerning the examination or status of the application is accessible in the PAIR system at http://www.uspto.gov/ebc/index.html.

The application is being forwarded to the examiner for action on the merits commensurate with this decision.

/Mano Padmanabhan/

Mano Padmanabhan
Quality Assurance Specialist, Technology Center 2100, Workgroup 2180
571-272-4210

Doc Code: PET.GREEN
Document Description: Petition for Green Tech Pilot

PTO/SB/423 (08-10)
Approved for use through 01/31/2011. OMB 0651-0032
U.S. Patent and Trademark Office; U.S. DEPARTMENT OF COMMERCE
Under the Paperwork Reduction Act of 1995, no persons are required to respond to a collection of information unless it displays a valid OMB control number

PETITION TO MAKE SPECIAL UNDER THE GREEN TECHNOLOGY PILOT PROGRAM

Attorney Docket Number: ERTHF-001B	Application Number (if known): 12/620,453	Filing date: November 17, 2009

First Named Inventor: Steve Marple

Title: IMPROVED FIRE GRATE FOR ENHANCED COMBUSTION WITH VERTICAL AND HORIZONTAL EXPANSION SLEEVES

APPLICANT HEREBY REQUESTS TO PARTICIPATE IN THE GREEN TECHNOLOGY PILOT PROGRAM FOR THE ABOVE-IDENTIFIED APPLICATION. **See Instruction Sheet on page 2.**

This petition must be timely filed electronically using the USPTO electronic filing system, EFS-Web.

1. By filing this petition:

   Applicant is requesting early publication: **Applicant hereby requests early publication under 37 CFR 1.219 and the publication fee set forth in 37 CFR 1.18(d) accompanies this request.**

2. By filing this petition: applicant is agreeing to make an election without traverse in a telephonic interview and elect an invention that meets the eligibility requirements set forth in the notice titled "Pilot Program for Green Technologies Including Greenhouse Gas Reduction," as modified by the notice titled "Elimination of Classification Requirement in the Green Technology Pilot Program," each of which was published in the Federal Register, if the Office determines that the claims are not obviously directed to a single invention.

3. This request is accompanied by statements of special status for the eligibility requirement.

4. The application contains no more than three (3) independent claims and twenty (20) total claims.

5. The application does not contain any multiple dependent claims.

6. Other attachments: Statement on Materiality Standard

Signature	Date 10/25/10
Name (Print/Typed): Kit M. Stetina	Registration Number 29445

Note: Signatures of all the inventors or assignees of record of the entire interest or their representative(s) are required in accordance with 37 CFR 1.33 and 11.18. Please see 37 CFR 1.4(d) for the form of the signature. If necessary, submit multiple forms for more than one signature, see below.*

☐ **Total of_____ forms are submitted.*

The information is required to obtain or retain a benefit by the public which is to file (and by the USPTO to process) an application. Confidentiality is governed by 35 U.S.C. 122 and 37 CFR 1.11 and 1.14. This collection is estimated to take 1 hour to complete, including gathering, preparing, and submitting the completed application form to the USPTO. Time will vary depending upon the individual case. Any comments on the amount of time you require to complete this form and/or suggestions for reducing this burden, should be sent to the Chief Information Officer, U.S. Patent and Trademark Office, U.S. Department of Commerce, P.O. Box 1450, Alexandria, VA 22313-1450. DO NOT SEND FEES OR COMPLETED FORMS TO THIS ADDRESS. **SEND TO: Commissioner for Patents, P.O. Box 1450, Alexandria, VA 22313-1450.**

If you need assistance in completing the form, call 1-800-PTO-9199 and select option 2.

PTO/SB/420 (08-10)
Approved for use through 01/31/2011. OMB 0651-0062
U.S. Patent and Trademark Office; U.S. DEPARTMENT OF COMMERCE
Under the Paperwork Reduction Act of 1995, no persons are required to respond to a collection of information unless it displays a valid OMB control number.

Instruction Sheet for Petition to Make Special Under the Green Technology Pilot Program

(Not to be Submitted to the USPTO)

The following is a summary of the requirements (for more information see the notices (i) "Pilot Program for Green Technologies Including Greenhouse Gas Reduction" and (ii) "Elimination of Classification Requirement in the Green Technology Pilot Program," available on the USPTO web site at http://www.uspto.gov/patents/init_events/green_tech.jsp):

(1) The application must be a non-reissue, non-provisional utility application filed under 35 U.S.C. 111(a), or an international application that has entered the national stage in compliance with 35 U.S.C. 371. The application must be previously filed before the publication date of the notice cited above. Reexamination proceedings are excluded from this pilot program.

(2) The application must contain three or fewer independent claims and twenty or fewer total claims. The application must not contain any multiple dependent claims. For an application that contains more than three independent claims or twenty total claims, or multiple dependent claims, applicant must file a preliminary amendment in compliance with 37 CFR 1.121 to cancel the excess claims and/or the multiple dependent claims at the time the petition to make special is filed.

(3) The claims must be directed to a single invention that materially enhances the quality of the environment, or that materially contributes to: (1) the discovery or development of renewable energy resources; (2) the more efficient utilization and conservation of energy resources; or (3) green house gas emission reduction (see the eligibility requirements of sections II and III of the notice (i) cited above). The petition must include a statement that, if the USPTO determines that the claims are directed to multiple inventions (e.g., in a restriction requirement), applicant will agree to make an election without traverse in a telephonic interview, and elect an invention that meets the eligibility requirements in section II or III of the notice (i) cited above.

(4) The petition to make special must be timely filed electronically using the USPTO electronic filing system, EFS-Web, and selecting the document description of "Petition for Green Tech Pilot" on the EFS-Web screen. Applicant should use form PTO/SB/420, which is available as a Portable Document Format (PDF) fillable form in EFS-Web and on the USPTO Web site.

(5) The petition to make special must be filed at least one day prior to the date that a first Office action (which may be an Office action containing only a restriction requirement) appears in the Patent Application Information Retrieval (PAIR) system. Applicant may check the status of the application using PAIR.

(6) The petition to make special must be accompanied by a request for early publication in compliance with 37 CFR 1.219 and the publication fee set forth in 37 CFR 1.18(d).

Privacy Act Statement

The Privacy Act of 1974 (P.L. 93-579) requires that you be given certain information in connection with your submission of the attached form related to a patent application or patent. Accordingly, pursuant to the requirements of the Act, please be advised that: (1) the general authority for the collection of this information is 35 U.S.C. 2(b)(2); (2) furnishing of the information solicited is voluntary; and (3) the principal purpose for which the information is used by the U.S. Patent and Trademark Office is to process and/or examine your submission related to a patent application or patent. If you do not furnish the requested information, the U.S. Patent and Trademark Office may not be able to process and/or examine your submission, which may result in termination of proceedings or abandonment of the application or expiration of the patent.

The information provided by you in this form will be subject to the following routine uses:

1. The information on this form will be treated confidentially to the extent allowed under the Freedom of Information Act (5 U.S.C. 552) and the Privacy Act (5 U.S.C 552a). Records from this system of records may be disclosed to the Department of Justice to determine whether disclosure of these records is required by the Freedom of Information Act.
2. A record from this system of records may be disclosed, as a routine use, in the course of presenting evidence to a court, magistrate, or administrative tribunal, including disclosures to opposing counsel in the course of settlement negotiations.
3. A record in this system of records may be disclosed, as a routine use, to a Member of Congress submitting a request involving an individual, to whom the record pertains, when the individual has requested assistance from the Member with respect to the subject matter of the record.
4. A record in this system of records may be disclosed, as a routine use, to a contractor of the Agency having need for the information in order to perform a contract. Recipients of information shall be required to comply with the requirements of the Privacy Act of 1974, as amended, pursuant to 5 U.S.C. 552a(m).
5. A record related to an International Application filed under the Patent Cooperation Treaty in this system of records may be disclosed, as a routine use, to the International Bureau of the World Intellectual Property Organization, pursuant to the Patent Cooperation Treaty.
6. A record in this system of records may be disclosed, as a routine use, to another federal agency for purposes of National Security review (35 U.S.C. 181) and for review pursuant to the Atomic Energy Act (42 U.S.C. 218(c)).
7. A record from this system of records may be disclosed, as a routine use, to the Administrator, General Services, or his/her designee, during an inspection of records conducted by GSA as part of that agency's responsibility to recommend improvements in records management practices and programs, under authority of 44 U.S.C. 2904 and 2906. Such disclosure shall be made in accordance with the GSA regulations governing inspection of records for this purpose, and any other relevant (*i.e.*, GSA or Commerce) directive. Such disclosure shall not be used to make determinations about individuals.
8. A record from this system of records may be disclosed, as a routine use, to the public after either publication of the application pursuant to 35 U.S.C. 122(b) or issuance of a patent pursuant to 35 U.S.C. 151. Further, a record may be disclosed, subject to the limitations of 37 CFR 1.14, as a routine use, to the public if the record was filed in an application which became abandoned or in which the proceedings were terminated and which application is referenced by either a published application, an application open to public inspection or an issued patent.
9. A record from this system of records may be disclosed, as a routine use, to a Federal, State, or local law enforcement agency, if the USPTO becomes aware of a violation or potential violation of law or regulation.

Application No.: 12/620,453
Petition to Make Special Under the Green Technology Pilot Program
Attorney Docket: ERTHF-001A

IN THE UNITED STATES PATENT AND TRADEMARK OFFICE

Applicants:	Steve Marple	Confirmation No.	5155
Serial No.:	12/620,453	Art Unit:	3749
Filed:	November 17, 2009	Examiner:	Unknown
For:	Fire Grate with Enhanced Combustion		

STATEMENT ON MATERIALITY FOR PETITION TO MAKE SPECIAL UNDER THE GREEN TECHNOLOGY PILOT PROGRAM

Commissioner for Patents
P.O. Box 1450
Alexandria, VA 22313-1450

Dear Sir/Madam:

Applicant respectfully submits that the invention recited in the claims materially enhances or contributes to the quality of the environment, specifically, the maintenance of the basic light sustaining natural elements, specifically, **air**. Additionally, the invention recited in the claims materially contributes to the **reduction of green house gas emissions**. As recited in the preamble of Claim 1, the apparatus promotes a cleaner burn of fuel. As explained in paragraph [0004] of the instant specification, fireplaces produce a significant amount of emissions. Paragraph [0003] of the instant specification states that the apparatus is directed toward improving efficiency of the fireplace in relation to the reduction of harmful emissions. Harmful emissions degrade the **air** quality (i.e. basic light sustaining natural elements). By promoting a cleaner burn, the apparatus recited in the claims reduces the harmful emissions of the fireplace to maintain and improve air quality. Moreover, such reduction of harmful emissions also has a direct impact on the reduction of greenhouse gas emissions. Applicant respectfully directs the Examiner's attention to Exhibit A which is a Wikipedia printout of wood fuel, such as those used in fireplaces. On page 6 of the Wikipedia printout, it explains that inefficient and incomplete combustion of wood can result

in elevated levels of greenhouse gases other than CO_2. Paragraph [0023] of the instant specification explains how the invention recited in the claims increases efficiency of the fireplace. Accordingly, Applicant respectfully submits that the claimed invention materially contributes to the maintenance of air quality or the basic light sustaining natural element discussed in M.P.E.P. § 708.02 and the reduction of greenhouse gas emissions.

Applicant submits concurrently herewith the attached Petition to Make Special Under the Green Technology Pilot Program as well as the statements above in relation to the materiality standard. Applicant respectfully requests that the instant application be appointed special status under the Green Technology Pilot Program. Applicant respectfully requests that the instant application be placed on the Examiner's special docket since the first Office Action has not yet been rendered. Applicant respectfully requests that this petition be granted.

If any additional fee is required, please charge Deposit Account Number 19-4330.

Respectfully submitted,

Date: 10/25/10 By: _____

Kit M. Stetina
Registration No. 29,445
STETINA BRUNDA GARRED & BRUCKER
75 Enterprise, Suite 250
Aliso Viejo, California 92656
Telephone: (949) 855-1246
Fax: (949) 855-6371

Customer No.: 007663

KMS/JCY/nar

T:\Client Documents\ERTHF\001B (WAS LEIGH-037B)\PetitionGreenTech2PTOertht001B.doc

Exhibit A

Wood fuel

From Wikipedia, the free encyclopedia

Wood fuel is wood used as fuel. The burning of wood is currently the largest use of energy derived from a solid fuel biomass. Wood fuel can be used for cooking and heating, and occasionally for fueling steam engines and steam turbines that generate electricity. Wood fuel may be available as firewood (e.g. logs, bolts, blocks), charcoal, chips, sheets, pellets and sawdust. The particular form used depends upon factors such as source, quantity, quality and application. Sawmill waste and construction industry by-products also include various forms of lumber tailings.

Wood may be sent into a furnace to be burned, stove, fireplace, or in a campfire, or used for a bonfire. Wood is the most easily available form of fuel, requiring no tools in the case of picking up dead wood, or little tools, although as in any industry, specialized tools, such as skidders and hydraulic wood splitters, have evolved to mechanize production.

The discovery of how to make fire for the purpose of burning wood is regarded as one of humanity's most important advances.

Contents

- 1 Historical development
- 2 Firewood
  - 2.1 Energy content
  - 2.2 Measurement of firewood
- 3 Combustion by-products
  - 3.1 Combustion by-product effects on human health
- 4 Environmental Impact
  - 4.1 Harvesting Operations
  - 4.2 Greenhouse gases
- 5 Wood Fuels around the World
  - 5.1 European use of wood fuel
  - 5.2 Historic Japanese use of wood fuel
  - 5.3 Firewood use in Australia
  - 5.4 Efficieney and sustainability
- 6 1973 energy crisis
  - 6.1 Today
- 7 Retail cost
  - 7.1 United States
- 8 Potential use in renewable energy technologies
- 9 See also
- 10 References

- 11 External links

Historical development

The use of wood as a fuel source for heating is as old as civilization itself. Historically, it was limited in use only by the distribution of technology required to make a spark. **Wood heat** is still common throughout much of the world.

Early examples include the use of wood heat in tents. Fires were constructed on the ground, and a smoke hole in the top of the tent allowed the smoke to escape by convection.

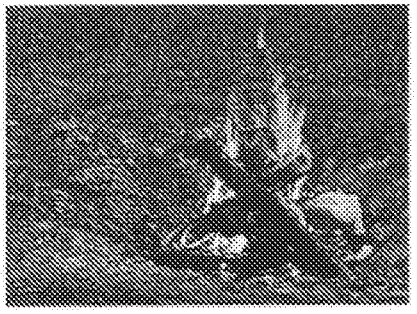

Campfires have been used for ages: fires are integral to humanity.

In permanent structures and in caves, hearths were constructed or established—surfaces of stone or another noncombustible material upon which a fire could be built. Smoke escaped through a smoke hole in the roof.

Wood has been used as fuel for millennia. The Greeks, Romans, Celts, Britons, and Gauls all had access to forests suitable for using as fuel. Over the centuries there was a partial deforestation of climax forests and the evolution of the remainder to coppice with standards woodland as the primary source of wood fuel. These woodlands involved a continuous cycle of new stems harvested from old stumps, on rotations between seven and thirty years. One of the earliest printed books in English was John Evelyn "Sylva, or a discourse on forest trees" (1664) advising landowners on the proper management of forest estates. H.L.Edlin, in "Woodland Crafts in Britain", 1949 outlines the extraordinary techniques employed, and range of wood products that have been produced from these managed forests since pre-roman times. And throughout this time the preferred form of wood fuel was the branches of cut coppice stems bundled into faggots. Larger, bent or deformed stems that were of no other use to the woodland craftsmen were converted to charcoal.

As with most of Europe, these managed woodlands continued to supply their markets right up to the end of World War two. Since then much of these woodlands have been converted to broadscale agriculture. Total demand for fuel increased considerably with the industrial revolution but most of this increased demand was met by the new fuel source, Coal, which was more compact and more suited to the larger scale of the new industries.

The development of the chimney and the fireplace allowed for more effective exhaustion of the smoke. Masonry heaters or stoves went a step further by capturing much of the heat of the fire and exhaust in a large thermal mass, becoming much more efficient than a fireplace alone.

The metal stove was a technological development concurrent with the industrial revolution. Stoves were manufactured or constructed pieces of equipment that contained the fire on all sides and provided a means for controlling the draft—the amount of air allowed to reach the fire. Stoves have been made of a variety of materials. Cast iron is among the more common. Soapstone (talc), tile, and steel have all been used. Metal stoves are often lined with refractory materials such as firebrick, since the hottest part of a woodburning fire will burn away steel over the course of several years' use.

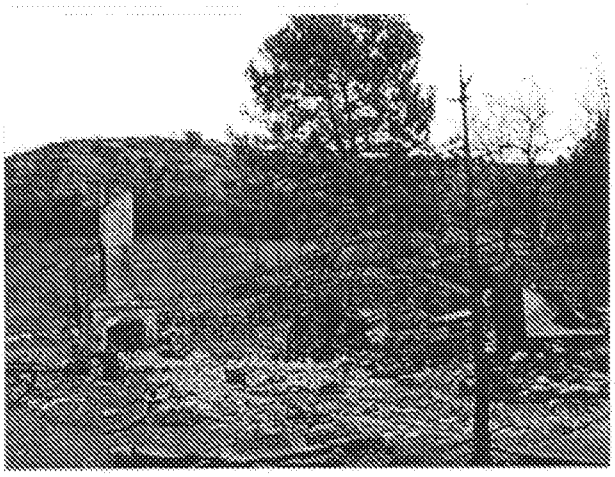

Fireplace and chimney; fire in the wrong place--Witch Fire, California

The Franklin stove was developed in the United States by Benjamin Franklin. More a manufactured fireplace than a stove, it had an open front and a heat exchanger in the back that was designed to draw air from the cellar and heat it before releasing it out the sides. The heat exchanger was never a popular feature and was omitted in later versions. So-called "Franklin" stoves today are made in a great variety of styles, though none resembles the original design.

The 1800s became the high point of the cast iron stove. Each local foundry would make their own design, and stoves were built for myriads of purposes—parlour stoves, box stoves, camp stoves, railroad stoves, portable stoves, cooking stoves and so on. Elaborate nickel and chrome edged models took designs to the edge, with cast ornaments, feet and doors. Wood or coal could be burnt in the stoves and thus they were popular for over one hundred years. The action of the fire, combined with the causticity of the ash, ensured that the stove would eventually disintegrate or crack over time. Thus a steady supply of stoves was needed. The maintenance of stoves, needing to be blacked, their smokiness, and the need to split wood meant that oil or electric heat found favour.

The airtight stove, originally made of steel, allowed greater control of combustion, being more tightly fitted than other stoves of the day. Airtight stoves became common in the 19th century.

Use of wood heat declined in popularity with the growing availability of other, less labor-intensive fuels. Wood heat was gradually replaced by coal and later by fuel oil, natural gas and propane heating except in rural areas with available forests.

After the 1967 Oil Embargo, many in the United States used wood for the first time. The EPA provided information on clean stoves, which burned much more efficiently.[1]

Firewood

Main article: Firewood

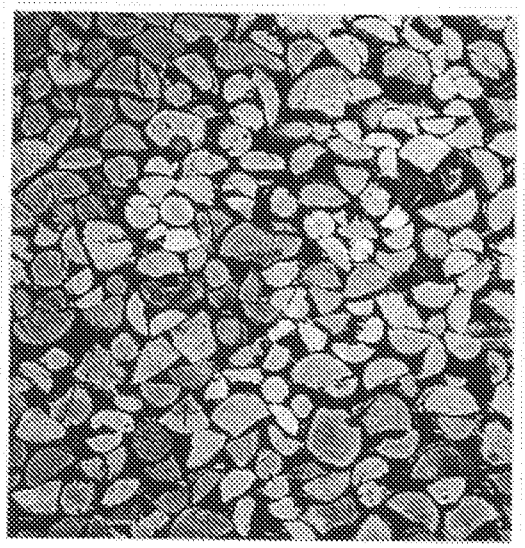

Stapled birch wood

Fuels for heating

Heating oil
Wood pellet
Kerosene
Propane
Natural gas
Wood
Coal

Some firewood is harvested in "woodlots" managed for that purpose, but in heavily wooded areas it is more usually harvested as a byproduct of natural forests. Deadfall that has not started to rot is preferred, since it is already partly seasoned. Standing dead timber is considered better still, as it is both seasoned, and has less rot. Harvesting this form of timber reduces the speed and intensity of bushfires. Harvesting timber for firewood is normally carried out by hand with chainsaws. Thus, longer pieces - requiring less manual labour, and less chainsaw fuel - are less expensive and only limited by the size of their firebox. Prices also vary considerably with the distance from wood lots, and quality of the wood. Firewood usually relates to timber or trees unsuitable for building or construction. Firewood is a renewable resource provided the consumption rate is controlled to sustainable levels. The shortage of suitable firewood in some places has seen local populations damaging huge tracts of bush thus leading to further desertification.

Energy content

A common hardwood, red oak, has an energy content of 14.89 megajoules per kilogram (6,388 BTU per pound), and 10.423 megajoules recoverable if burned at 70% efficiency.[2]

The Sustainable Energy Development Office (SEDO), part of the Government of Western Australia states that the energy content of wood is 16.2 megajoules per kilogram (4.5 kWh/kg).[3]

According to *The Bioenergy Knowledge Centre*, the energy content of wood is much more dependent on the moisture content than the species. The energy content (number of joules of heat produced) improves towards the total number of joules stored in the wood as it dries.[4]

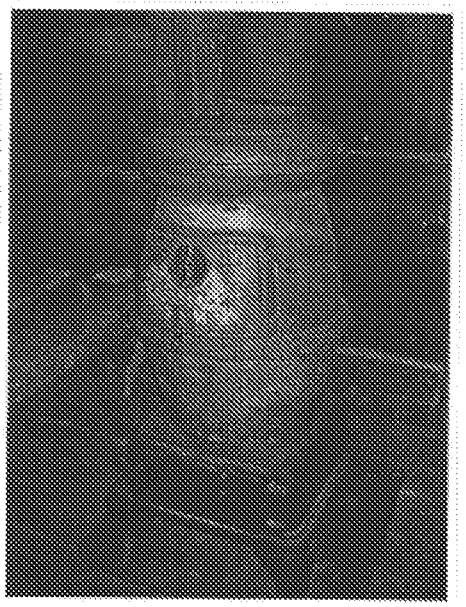

Potbelly stove at the Museum of Appalachia

Measurement of firewood

In the metric system, firewood is normally sold by the cubic metre or stere (1 m^3 = ~0.276 cords).

In the United States, firewood is usually sold by the cord, 128 ft^3 (3.62 m^3), corresponding to a woodpile 8 ft wide × 4 ft high of 4 ft-long logs. The cord is legally defined by statute in most states. A "thrown cord" is firewood that has not been stacked and is defined as 4 ft wide x 4 ft tall x 10 ft long. The additional volume is to make it equivalent to a standard stacked cord, where there is less void space. It is also common to see wood sold by the "face cord", which is usually *not* legally defined, and varies from one area to another. For example, in one state a pile of wood 8 feet wide × 4 feet high of 16"-long logs will often be sold as a "face cord", though its volume is only one-third of a cord. In another state, or even another area

of the same state, the volume of a face cord may be considerably different. Hence, it is risky to buy wood sold in this manner, as the transaction is not based on a legally enforceable unit of measure.

In Australia, it is normally sold by the tonne.

Combustion by-products

As with any fire, burning wood fuel creates numerous by-products, some of which may be useful (heat and steam), and others that are undesirable, irritating or dangerous.

One by-product of wood burning is wood ash, which in moderate amounts is a fertilizer (mainly potash), contributing minerals, but is strongly alkaline as it contains potassium hydroxide[5] (lye). Wood ash can also be used to manufacture soap.

Smoke, containing water vapor, carbon dioxide and other chemicals and aerosol particulates, can be an irritating (and potentially dangerous) by-product of partially burnt wood fuel. A major component of wood smoke is fine particles that may account for a large portion of particulate air pollution in some regions. During cooler months, wood heating accounts for as much as 60% of fine particles in Melbourne, Australia.[6]

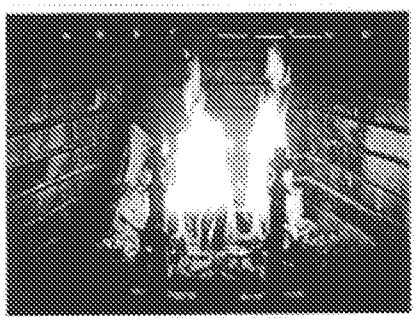

Wood-burning fireplace with burning log.

Slow combustion stoves increase efficiency of wood heaters burning logs, but also increase particulate production. Low pollution/slow combustion stoves are a current area of research.[*citation needed*] An alternative approach is to use pyrolysis to produce several useful biochemical byproducts, and clean burning charcoal, or to burn fuel extremely quickly inside a large thermal mass, such as a masonry heater. This has the effect of allowing the fuel to burn completely without producing particulates while maintaining the efficiency of the system.[*citation needed*]

In some of the most efficient burners, the temperature of the smoke is raised to a much higher temperature where the smoke will itself burn (e.g., 1,200 degrees for igniting carbon monoxide gas). This may result in significant reduction of smoke hazards while also providing additional heat from the process. By using a catalytic converter, the temperature for obtaining cleaner smoke can be reduced. Some U.S. jurisdictions prohibit sale or installation of stoves that do not incorporate catalytic converters.[*citation needed*]

Combustion by-product effects on human health

Depending on population density, topography, climatic conditions and combustion equipment used, wood heating may substantially contribute to air pollution, particularly particulates. Wood combustion products can include toxic and carcinogenic substances.[*citation needed*] The conditions in which wood is burnt will greatly influence the content of the emission.[*citation needed*]

Particulate air pollution can contribute to human health problems and increased hospital admissions for asthma & heart diseases.[6]

The technique of compressing wood pulp into pellets or artificial logs can reduce emissions. The combustion is cleaner, and the increased wood density and reduced water content can eliminate 3 to 7% of the transport bulk.[*citation needed*] Thus the fossil energy consumed in transport is reduced (and in fact represents a tiny fraction of the fossil fuel consumed in producing and distributing heating oil or gas).

Environmental Impact

Harvesting Operations

Much wood fuel comes from native forests around the world. Plantation wood is rarely used for firewood, as it is more valuable as timber or wood pulp. The collection or harvesting of this wood can have serious environmental implications for the collection area. The concerns are often specific to the particular area, but can include all the problems that regular logging create. The heavy removal of wood from forests can cause habitat destruction and soil erosion. However, in many countries, for example in Europe and Canada, the forest residues are being collected and turned into useful wood fuels with minimal impact on the environment. Consideration is given to soil nutrition as well as erosion. The environmental impact of using wood as a fuel depends on how it is burnt, but even if a fire gives off lots of smoke and particulates at least it is using a sustainable fuel, compared with fossil fuels. When wood that is sourced from a sustainable plantation, it can be regarded as being carbon-neutral. That is, a tree absorbs as much carbon (or carbon dioxide) as it releases when burnt.

Greenhouse gases

Wood burning does *not* release any more carbon dioxide than the eventual biodegradation of the wood if it was not burned. Wood burning can therefore be considered "carbon neutral" - the CO_2 released to the atmosphere by combustion is recycled continuously into new plant growth as part of the carbon cycle, while the energy released during combustion is simply a form of stored solar energy. However, wood harvesting and transport operations do produce varying degrees of greenhouse gas pollution. Inefficient and incomplete combustion of wood can result in elevated levels of greenhouse gases other than CO_2, which may result in positive emissions where the biproducts have greater Carbon dioxide equivalent values.[7]

The intentional and controlled charring of wood and its incorporation into the soil is an effective method for carbon sequestration as well as an important technique to improve soil conditions for agriculture, particularly in heavily forested regions. It forms the basis of the rich soils known as Terra preta.

Wood Fuels around the World

European use of wood fuel

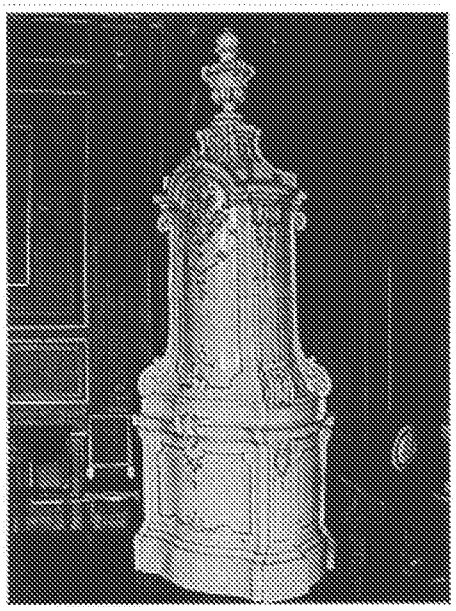

Ceramic stoves are traditional in Northern Europe: an 18th-century faience stove at Łańcut Castle, Poland

Some countries produce a significant fraction of their electricity needs from wood or wood wastes. Sweden, for example produces 1,490 megawatts of electricity this way and Austria produces 747 megawatts[*citation needed*]. The Swedish figure corresponds circa 4.5 % of the nation's total installed production capacity (33 400 MW in 2003). In Finland, there is a growing interest in using wood waste as fuel for home and industrial heating, in the form of compacted pellets.

In Scandinavian countries the costs of manual labour to process firewood is very high. Therefore it is common to import firewood from countries with cheap labour and natural resources. The main exporters to Scandinavia are the Baltic countries (Estonia, Lithuania, and Latvia).

Historic Japanese use of wood fuel

Wood, during the Edo period, was used for many purposes, and the consumption of wood led Japan to develop a forest management policy during that era.[8] Demand for timber resources was on the rise not only for fuel, but also for construction of ships and buildings, and consequently deforestation was widespread. As a result, forest fires occurred, along with floods and soil erosion. Around 1666, the shogun made it a policy to reduce logging and increase the planting of trees. This policy decreed that only the shogun, and/or a daimyo, could authorize the use of wood. By the 18th century, Japan had developed detailed scientific knowledge about silviculture and plantation forestry.

Firewood use in Australia

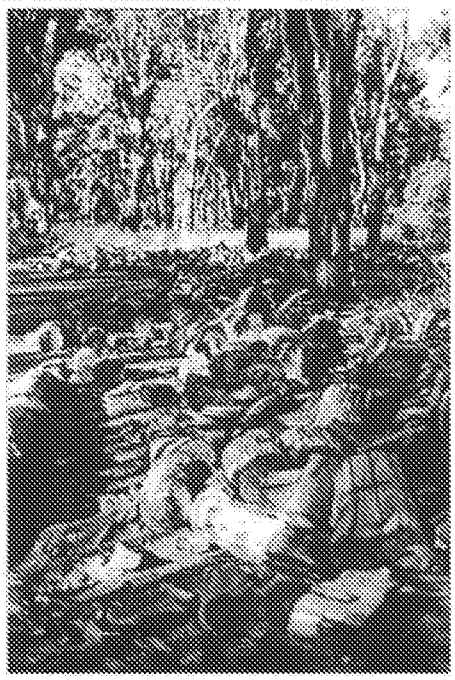

A pile of firewood logged from the Barmah Forest in Victoria.

About 1.5 million households in Australia use firewood as the main form of domestic heating.[9] As of 1995, approximately 1.85 million cubic metres of firewood (1m³ equals approximately one car trailer load) was used in Victoria annually, with half being consumed in Melbourne.[10] This amount is comparable to the wood consumed by all of Victoria's sawlog and pulplog forestry operations (1.9 million m³). *[citation needed]*

Species used as sources of firewood include:

- Red Gum, from forests along the Murray River (the Mid-Murray Forest Management Area, including the Barmah and Gunbower forests, provides about 80% of Victoria's red gum timber[11]).
- Box and Messmate Stringybark, in southern Australia.
- Sugar gum, a wood with high thermal efficiency that usually comes from small plantations. *[citation needed]*

Environmental concerns

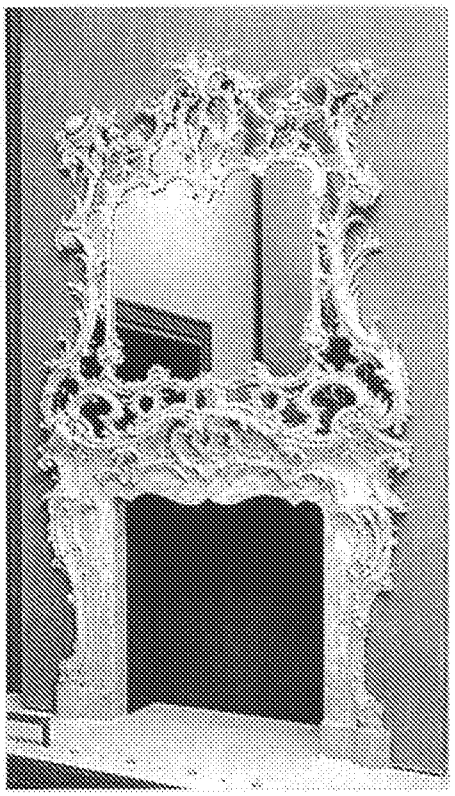

Chimneypiece and overmantel, about 1750 V&A Museum no. 738:1 to 3-1897

The environmental impact of burning wood fossil fuel is debatable. Several cities have moved towards setting standards of use and/or bans of wood burning fireplaces. For example, the city of Montréal, Québec passed a resolution to ban wood fireplace installation in new construction.

The environmental impact is debatable, however, as many wood burning advocates claim that properly harvested wood in carbon-neutral, therefore off-setting the negative impact of by-product particles given off during the burning process.

Efficiency and sustainability

With appropriately certified and operated modern wood heaters, the use of good quality wood fuel is one of the most efficient and cheapest forms of heating in Australia. *[citation needed]* The replacement of existing national domestic heating needs supplied by wood with gas and electricity would result in a significant net increase in carbon dioxide emissions,[12] while the application and enforcement of national standards for wood heaters and wood fuel would substantially reduce particulate emissions.[13] The peak industry body, the Australian Home Heating Association Inc is a major financial supporter of Landcare Australia, sponsoring the planting of over 40,000 trees per year. Landcare groups have planted millions of trees in revegetation programs to replace the estimated 20 billion trees removed since

European settlement, laid thousands of kilometres of protective fencing, introduced sustainable farming techniques, removed hundreds of thousands of tonnes of weeds, and volunteered countless hours to the land care ethic.[9]

Firewood plantations also provide alternative financial opportunities for farmers and local government, with fuel being one of the multi-uses of tree plantations.

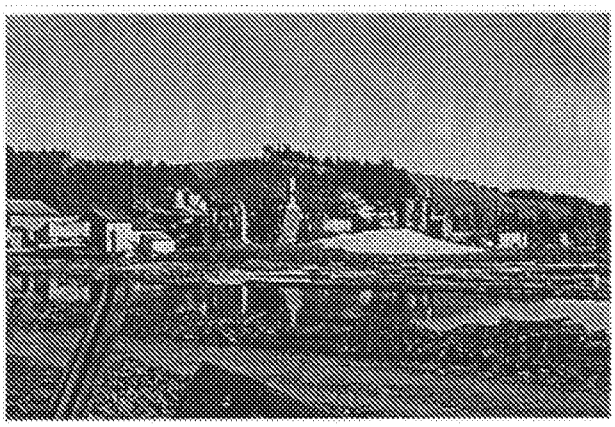

Sawmills create and burn sawdust: it can be pelletized and used at home

1973 energy crisis

A brief resurgence in popularity occurred during and after the 1973 energy crisis, when some believed that fossil fuels would become so expensive as to preclude their use. A period of innovation followed, with many small manufacturers producing stoves based on designs old and new. Notable innovations from that era include the Ashley heater, a thermostatically controlled stove with an optional perforated steel enclosure that prevented accidental contact with hot surfaces.

A number of dual-fuel furnaces and boilers were made, which utilized ductwork and piping to deliver heat throughout a house or other building.

The growth in popularity of wood heat also led to the development and marketing of a greater variety of equipment for cutting and splitting wood. Consumer grade hydraulic log splitters were developed to be powered by electricity, gasoline, or PTO of farm tractors.

The magazine "Wood Burning Quarterly" was published for several years before changing its name to "Home Energy Digest" and, subsequently, disappearing.

Today

A pellet stove is an appliance that burns compressed wood or biomass pellets.

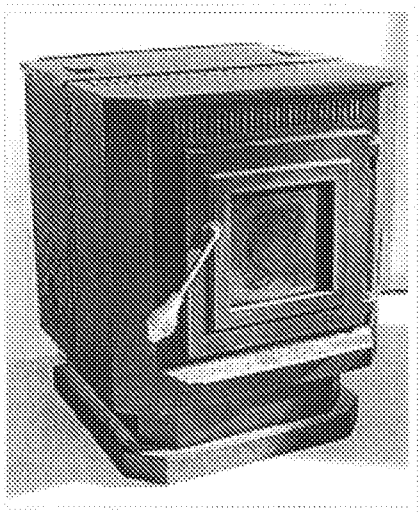

A wood pellet stove.

Wood heat continues to be used in areas where firewood is abundant. For serious attempts at heating, rather than mere ambiance (open fireplaces), stoves, fireplace inserts, and furnaces are most commonly used today. In rural, forested parts of the U.S., freestanding boilers are increasingly common. They are installed outdoors, some distance from the house, and connected to a heat exchanger in the house using underground piping. The mess of wood, bark, smoke, and ashes is kept outside and the risk of fire is reduced. The boilers are large enough to hold a fire all night, and can burn larger pieces of wood, so that less cutting and splitting is required. There is no need to retrofit a chimney in the house. However, outdoor wood boilers emit more wood smoke and associated pollutants than other wood-burning appliances. This is due to design characteristics such as the water-filled jacket surrounding

the firebox, which acts to cool the fire and leads to incomplete combustion. Outdoor wood boilers also typically have short stack heights in comparison to other wood-burning appliances, contributing to ambient levels of particulates at ground level. An alternative that is increasing in popularity are wood gasification boilers, which burn wood at very high efficiencies (85-91%) and can be placed indoors or in an outbuilding.

Wood is still used today for cooking in many places, either in a stove or an open fire. It is also used as a fuel in many industrial processes, including smoking meat and making maple syrup.

As a sustainable energy source, wood fuel also remains viable for generating electricity in areas with easy access to forest products and by-products.

Retail cost

United States

In 2008, wood for fuel cost $15.15 per 1 million BTUs.[14]

Potential use in renewable energy technologies

- Pellet stove
- Wood pellets
- Efficient stove for developing nations
- Sawdust can be pelletized

See also

- Biofuel
- Biomass
- Forestry
- Renewable heat
- Urban lumberjacking
- Wood-fired oven
- Wood gas
- Woodchips

References

1. ^ Clean Burning Wood Stoves and Fireplaces (http://www.epa.gov/woodstoves/index.html)
2. ^ wood heat value (BTU) (http://www.daviddarling.info/encyclopedia/W/AE_wood_heat_value_BTU.html)
3. ^ [1] (http://www.sedo.energy.wa.gov.au/pages/heat_run.asp)
4. ^ Bioenergy Knowledge Centre's Calculators (http://www.bkc.co.nz/BioenergyResources/Bioenergycalculationtools/tabid/86/Default.aspx) (includes a range of calculators, including one for calculating the energy content of wood, taking into account the moisture content)
5. ^ http://www.fpl.fs.fed.us/documnts/pdf1993/misra93a.pdf
6. ^ [a] [b] Environment Protection Authority (2002) Wood heaters, open fires and air quality. Publication 851 EPA Victoria.
7. ^ Greenhouse gases from biomass and fossil fuel stoves in developing countries: A Manila pilot study

|http://www.sciencedirect.com/science?_ob=ArticleURL&_udi=B6V74-4876JPP-32&_user=559483&_coverDate=02%2F28%2F1993&_fmt=abstract&_orig=search&_cdi=5832&view=c&_acct=C000028178&_version=1&_urlVersion=0&_userid=559483&md5=ef69efc726051ccbfa8a46d89c4d5d13&ref=full
8. ^ Diamond, Jared. 2005 Collapse: How Societies Choose to Fail or Succeed. Penguin Books, New York. 294-304 pp. ISBN 0-14-303655-6
9. ^ *a b* Social Benefits (http://cleanairkapiti.wordpress.com/2009/12/26/the-truth-about-the-australian-home-heating-association/)
10. ^ Firewood (http://www.birdsaustralia.com.au/rtbced/firewood.htm)
11. ^ NRE 2002 Forest Management Plan for the Mid-Murray Forest Management Area
12. ^ Pollution Issues (http://cleanairkapiti.wordpress.com/2009/12/26/the-truth-about-the-australian-home-heating-association/)
13. ^ Benefits (http://cleanairkapiti.wordpress.com/2009/12/26/the-truth-about-the-australian-home-heating-association/)
14. ^ Ryan, Matt (June 20, 2008). *Homeowners seek cheaper winter heat*. Burlington Free Press.

External links

- Firewood Facts (http://cahe.nmsu.edu/pubs/_g/g-102.pdf)
- Firewood (http://www.duraflame.com/pdf/pscaa.pdf) Emissions Report

Retrieved from "http://en.wikipedia.org/wiki/Wood_fuel"
Categories: Heating, ventilating, and air conditioning | Solid fuels | Biomass | Wood | Fuels

- This page was last modified on 18 October 2010 at 22:30.
- Text is available under the Creative Commons Attribution-ShareAlike License; additional terms may apply. See Terms of Use for details.
  Wikipedia® is a registered trademark of the Wikimedia Foundation, Inc., a non-profit organization.

UNITED STATES PATENT AND TRADEMARK OFFICE

UNITED STATES DEPARTMENT OF COMMERCE
United States Patent and Trademark Office
Address: COMMISSIONER FOR PATENTS
P.O. Box 1450
Alexandria, Virginia 22313-1450
www.uspto.gov

APPLICATION NO.	FILING DATE	FIRST NAMED INVENTOR	ATTORNEY DOCKET NO.	CONFIRMATION NO.
12/620,453	11/17/2009	Steve Marple	ERTHF-001B	1593

7663 7590 11/01/2010

STETINA BRUNDA GARRED & BRUCKER
75 ENTERPRISE, SUITE 250
ALISO VIEJO, CA 92656

EXAMINER	
ART UNIT	PAPER NUMBER
3749	

MAIL DATE	DELIVERY MODE
11/01/2010	PAPER

Please find below and/or attached an Office communication concerning this application or proceeding.

The time period for reply, if any, is set in the attached communication.

UNITED STATES PATENT AND TRADEMARK OFFICE

Commissioner for Patents
United States Patent and Trademark Office
P.O. Box 1450
Alexandria, VA 22313-1450
www.uspto.gov

STETINA BRUNDA GARRED & BRUCKER
75 ENTERPRISE, SUITE 250
ALISO VIEJO CA 92656

In re Application of	:	
MARPLE, STEVE	:	DECISION ON PETITION
Application No. 12/620,453	:	TO MAKE SPECIAL UNDER
Filed: Nov, 17, 2009	:	THE GREEN TECHNOLOGY
Attorney Docket No. ERTHF-001B	:	PILOT PROGRAM
Title of Invention: FIRE GRATE FOR ENHANCED COMBUSTION WITH VERTICAL AND HORIZONTAL EXPANSION SLEEVES		

This is a decision on the petition under 37 CFR 1.102, filed October 26, 2010, to make the above-identified application special under the pilot program for applications pertaining to Green Technologies as set forth in 74 Federal Register Notice 64666 (December 8, 2009) and amended by 75 Federal Register Notice 28554 (May 21, 2010).

The petition is GRANTED.

If reconsideration of this decision is desired, a petition for reconsideration must be filed within ONE (1) MONTH OR THIRTY (30) DAYS from the mail date of this decision, whichever is longer. No extension of this time limit can be granted under 37 CFR 1.136(a) or (b). The petition for reconsideration should include an exhaustive attempt to provide the lacking item(s) noted below, since, after a decision on the petition for reconsideration, no further reconsideration or review of the matter will be undertaken by the Director.

A grantable petition to make an application special under 37 CFR 1.102 and the pilot program as set forth in 74 FR 64666 must be directed to a nonprovisional application filed under 35 USC 111(a) or be a national stage entry under 35 USC 371, exclusive of any reissue applications and be filed prior to the date of the notice, December 8, 2009.

In order to qualify for special status, the following requirements must be met. 1) The application must have no more than 3 independent claims and no more than 20 total claims. 2) The application must not contain any multiple dependent claims. 3) The petition must state the basis for seeking special status, i.e., the claimed invention either: A) materially enhances the quality of the environment or B) materially contributes to: i) the discovery or development of renewable

energy resources, ii) the more efficient utilization and conservation of energy resources, or iii) greenhouse gas emission reduction. 4) If the disclosure is not clear on its face that the claimed invention materially contributes under category (A) or (B), the petition must be accompanied by a statement by the applicant, assignee, or an attorney/agent registered to practice before the Office explaining how the materiality standard is met. 5) A statement that applicant will agree to make an election without traverse in a telephonic interview if a restriction requirement is made by the examiner. 6) The petition to make special must be filed electronically. 7) The petition must be filed at least one day prior to the date that a first Office Action appears in the Patent Application Information Retrieval (PAIR) system. 8) The petition must be accompanied by a request for early publication in compliance with 37 CFR 1.219 and include the publication fee as set forth in 37 CFR 1.18(d).

The requirement for a fee for consideration of the petition to make special for applications pertaining to Green Technologies has been waived.

The instant petition complies with items 1 – 8 above. Accordingly, the above-identified application has been accorded "special" status.

Telephone inquires concerning this decision should be directed to Henry Yuen at 571-272-4856.

The application is being forwarded to the Technology Center Art Unit 3749 for action on the merits commensurate with this decision.

/Henry C. Yuen/

Henry C. Yuen
Quality Assurance Specialist
Technology Center 3700

UNITED STATES PATENT AND TRADEMARK OFFICE

Commissioner for Patents
United States Patent and Trademark Office
P.O. Box 1450
Alexandria, VA 22313-1450
www.uspto.gov

STEPTOE & JOHNSON, LLP
2121 AVENUE OF THE STARS
SUITE 2800
LOS ANGELES, CA 90067

MAILED

DEC 07 2010

OFFICE OF PETITIONS

In re Application of	:	
Theodore Keenan et al	:	DECISION GRANTING STATUS
Application No. 12/620,464	:	UNDER 37 CFR 1.47(a)
Filed: November 17, 2009	:	
Attorney Docket No. 83336.1778	:	

This is a decision on the petition filed June 1, 2010 under 37 CFR 1.47(a).

The petition is **GRANTED.**

Petitioner has shown that the non-signing inventors, Paul C. McLaughlin and Wayne W. Walkwitz, have refused to join in the filing of the above-identified application.

The application and papers have been reviewed and found in compliance with 37 CFR 1.47(a). This application is hereby accorded Rule 1.47(a) status.

As provided in 37 CFR 1.47(c), this Office will forward notice of this application's filing to the non-signing inventor at the address given in the petition. Notice of the filing of this application will also be published in the Official Gazette.

This matter is being referred to the Office of Patent Application Processing.

Telephone inquiries regarding this decision should be directed to Irvin Dingle at (571) 272-3210.

David Bucci
Petitions Examiner
Office of Petitions

UNITED STATES PATENT AND TRADEMARK OFFICE

Commissioner for Patents
United States Patent and Trademark Office
P.O. Box 1450
Alexandria, VA 22313-1450
www.uspto.gov

Paul C. McLaughlin
328 Fourth Street
Brigantine, NJ 08203

In re Application of
Theodore Keenan; William Decoux; Bryan M. Kelly; Paul C. McLaughlin; Ryan Randazzo; Patricia A. McMahan; Frank J. Silvestro; Wayne W. Walkwitz
Application No. 12/620,464
Filed: November 17, 2009
For: POWER WINNERS PROCESSING SYSTEM AND METHOD

MAILED
DEC 07 2010
OFFICE OF PETITIONS

Dear Mr. McLaughlin:

You are named as a joint inventor in the above identified United States patent application, filed under the provisions of 35 U.S.C. 116 (United States Code), and 37 CFR 1.47(a), Rules of Practice in Patent Cases. Should a patent be granted on the application you will be designated therein as a joint inventor.

As a named inventor you are entitled to inspect any paper in the file wrapper of the application, order copies of all or any part thereof (at a prepaid cost per 37 CFR 1.19) or make your position of record in the application. Alternatively, you may arrange to do any of the preceding through a registered patent attorney or agent presenting written authorization from you. If you care to join in the application, counsel of record (see below) would presumably assist you. Joining in the application would entail the filing of an appropriate oath or declaration by you pursuant to 37 CFR 1.63.

Telephone inquiries regarding this communication should be directed to the Irvin Dingle at (571) 272-3210. Requests for information regarding your application should be directed to the File Information Unit at (703) 308-2733. Information regarding how to pay for and order a copy of the application, or a specific paper in the application, should be directed to Certification Division at (571) 272-3150 or 1 (800) 972-6382 (outside the Washington D.C. area).

David Bucc
Petitions Examiner
Office of Petitions

cc: Steptoe & Johnson, LLP
2121 Avenue of the Stars
Suite 2800
Los Angeles, CA 90067

UNITED STATES PATENT AND TRADEMARK OFFICE

Commissioner for Patents
United States Patent and Trademark Office
P. O. Box 1450
Alexandria, VA 22313-1450
www. uspto. gov

MAILED

DEC 07 2010

OFFICE OF PETITIONS

Wayne W. Walkwitz
1105 Middle Avenue
Waterford Works, NJ 08089

In re Application of
Theodore Keenan; William Decoux; Bryan M. Kelly; Paul C. McLaughlin; Ryan Randazzo; Patricia A. McMahan; Frank J. Silvestro; Wayne W. Walkwitz
Application No. 12/620,464
Filed: November 17, 2009
For: POWER WINNERS PROCESSING SYSTEM AND METHOD

Dear Mr. Walkwitz:

You are named as a joint inventor in the above identified United States patent application, filed under the provisions of 35 U.S.C. 116 (United States Code), and 37 CFR 1.47(a), Rules of Practice in Patent Cases. Should a patent be granted on the application you will be designated therein as a joint inventor.

As a named inventor you are entitled to inspect any paper in the file wrapper of the application, order copies of all or any part thereof (at a prepaid cost per 37 CFR 1.19) or make your position of record in the application. Alternatively, you may arrange to do any of the preceding through a registered patent attorney or agent presenting written authorization from you. If you care to join in the application, counsel of record (see below) would presumably assist you. Joining in the application would entail the filing of an appropriate oath or declaration by you pursuant to 37 CFR 1.63.

Telephone inquiries regarding this communication should be directed to the Irvin Dingle at (571) 272-3210. Requests for information regarding your application should be directed to the File Information Unit at (703) 308-2733. Information regarding how to pay for and order a copy of the application, or a specific paper in the application, should be directed to Certification Division at (571) 272-3150 or 1 (800) 972-6382 (outside the Washington D.C. area).

David Bucci
Petitions Examiner
Office of Petitions

cc: Steptoe & Johnson, LLP
2121 Avenue of the Stars
Suite 2800
Los Angeles, CA 90067

UNITED STATES PATENT AND TRADEMARK OFFICE

Commissioner for Patents
United States Patent and Trademark Office
P.O. Box 1450
Alexandria, VA 22313-1450
www.uspto.gov

KOLISCH HARTWELL, P.C.
200 PACIFIC BUILDING
520 SW YAMHILL STREET
PORTLAND OR 97204

MAILED
MAR 29 2011
OFFICE OF PETITIONS

In re Application of :
DAN M. SHELDON :
Application No. 12/620,519 : ON PETITION
Filed: November 17, 2009 :
Attorney Docket No. **SMI302CON2CIP** :

This is a corrected decision on the petition under the unintentional provisions of 37 CFR 1.137(b), filed February 4, 2011, to revive the above-identified application.

The application became abandoned for failure to reply in a timely manner to the Notice to File Missing Parts of Nonprovisional Application (Notice), mailed December 4, 2009. The Notice set a period for reply of two (2) months from the mail date of the Notice. No extensions of time under the provisions of 37 CFR 1.136(a) were obtained. The application became abandoned on February 5, 2010.

The petition is hereby **GRANTED**.

The petition satisfies the requirements of 37 CFR 1.137(b) in that petitioner has supplied (1) the reply in the form of filing fee, search fee, examination fee, oath or declaration, and surcharge, (2) the petition fee of $810 (3) a proper statement of unintentional delay.

Telephone inquiries concerning this decision should be directed to JoAnne Burke at 571-272-4584.

This application is being referred to the Office of Patent Application Processing.

JoAnne Burke
Petitions Examiner
Office of Petitions

UNITED STATES PATENT AND TRADEMARK OFFICE

Commissioner for Patents
United States Patent and Trademark Office
P.O. Box 1450
Alexandria, VA 22313-1450
www.uspto.gov

REISING, ETHINGTON, BARNES, KISSELLE, P.C.
P. O. BOX 4390
TROY, MI 48099-4390

MAILED
NOV 22 2010
OFFICE OF PETITIONS

In re Application of :
Volker Joergl et al. :
Application No. 12/620,543 : DECISION ON PETITION
Filing Date: November 17, 2009 :
Attorney Docket No. **DKT05017E(0309.4013.908)** :

This is a decision on the petition under the unintentional provisions of 37 CFR 1.137(b), filed November 5, 2010, to revive the above-identified application.

The application became abandoned for failure to reply in a timely manner to the Notice to File Missing Parts of Non-Provisonal Application (Notice), mailed December 1, 2009. The Notice set a period for reply of two (2) months from the mail date of the Notice. No extensions of time under the provisions of 37 CFR 1.136(a) were obtained. Accordingly, the application became abandoned on February 2, 2010.

The petition is hereby **GRANTED**.

The petition satisfies the requirements of 37 CFR 1.137(b) in that petitioner has supplied (1) the reply in the form of an Oath or Declaration, and surcharge, (2) the petition fee of $1,620 (3) a proper statement of unintentional delay.

The Power of Attorney submitted with the instant petition on November 5, 2010, is hereby accepted and all future correspondence will be going to the address of record list above. However, the address given on the petition differs from the address of record. Therefore, a courtesy copy of this decision is being mailed to the address noted on the petition. Accordingly, until otherwise instructed, all future correspondence regarding this application will be mailed solely to the address of record.

Telephone inquiries concerning this decision should be directed to JoAnne Burke at 571-272-4584.

This application is being referred to the Office of Patent Application Processing.

JoAnne Burke
Petitions Examiner
Office of Petitions

cc: Cary W. Brooks
755 West Big Beaver Road, Suite 1850
Troy, MI 48084

UNITED STATES PATENT AND TRADEMARK OFFICE

Commissioner for Patents
United States Patent and Trademark Office
P.O. Box 1450
Alexandria, VA 22313-1450
www.uspto.gov

LOZA & LOZA LLP
305 NORTH SECOND AVE.
#127
UPLAND CA 91786

MAILED

APR 07 2011

OFFICE OF PETITIONS

In re Application of	:	
WINBERRY, Steven N. et al.	:	
Application No. 12/620,580	:	DECISION ON PETITION
Filed: November 17, 2009	:	TO WITHDRAW
Attorney Docket No. **SNW-1001**	:	FROM RECORD
	:	

This is a decision on the Request to Withdraw as attorney or agent of record under 37 C.F.R. § 1.36(b), filed February 03, 2011.

The request is **APPROVED**.

A grantable request to withdraw as attorney/agent of record must be signed by every attorney/agent seeking to withdraw or contain a clear indication that one attorney is signing on behalf of another/others. The Office requires the practitioner(s) requesting withdrawal to certify that he, she, or they have: (1) given reasonable notice to the client, prior to the expiration of the response period, that the practitioner(s) intends to withdraw from employment; (2) delivered to the client or a duly authorized representative of the client all papers and property (including funds) to which the client is entitled; and (3) notified the client of any responses that may be due and the time frame within which the client must respond, pursuant 37 CFR 10.40(c).

The request was signed by Shelly M. Cobos on behalf of all attorneys of record who are associated with customer No. 77683. All attorneys/agents associated have been withdrawn. Applicant is reminded that there is no attorney of record at this time.

All future correspondence will be directed to the first named inventor Steven N. Winberry at the address indicated below.

There are no outstanding office actions at this time.

Telephone inquiries concerning this decision should be directed to the undersigned at 571-272-4231.

Michelle R. Eason
Petitions Examiner
Office of Petitions

cc: **STEVEN N. WINBERRY**
16040 LEFFINGWELL ROAD, #7
WHITTIER, CA 90603

UNITED STATES PATENT AND TRADEMARK OFFICE

Commissioner for Patents
United States Patent and Trademark Office
P.O. Box 1450
Alexandria, VA 22313-1450
www.uspto.gov

VENTURE PACIFIC LAW, PC
5201 GREAT AMERICA PARKWAY, SUITE 270
SANTA CLARA, CA 95054

MAILED

AUG 3 1 2010

OFFICE OF PETITIONS

In re Application of	:	
Ronald Chang et al	:	DECISION GRANTING STATUS
Application No. 12/620,589	:	UNDER 37 CFR 1.47(a)
Filed: November 17, 2009	:	
Attorney Docket No. LePower-02	:	

This is a decision on the petition filed February 3, 2010 under 37 CFR 1.47(a).

The petition is **GRANTED.**

Petitioner has shown that the non-signing inventor Ronald Chang has refused to join in the filing of the above-identified application.

The application and papers have been reviewed and found in compliance with 37 CFR 1.47(a). This application is hereby accorded Rule 1.47(a) status.

As provided in 37 CFR 1.47(c), this Office will forward notice of this application's filing to the non-signing inventor at the address given in the petition. Notice of the filing of this application will also be published in the Official Gazette.

This matter is being referred to the Office of Patent Application Processing.

Telephone inquiries regarding this decision should be directed to Irvin Dingle at (571) 272-3210.

/David Bucci/
Petitions Examiner
Office of Petitions

UNITED STATES PATENT AND TRADEMARK OFFICE

Commissioner for Patents
United States Patent and Trademark Office
P.O. Box 1450
Alexandria, VA 22313-1450
www.uspto.gov

MAILED

AUG 3 1 2010

OFFICE OF PETITIONS

Ronald Chang
135 Leal Way
Fremont, CA 94539

In re Application of
Ronald Chang; Chin-Chi Chang; Chung-Kuang Huang
Application No. 12/620,589
Filed: November 17, 2009
For: METHODS AND CIRCUITS FOR LED DRIVERS AND FOR PWM DIMMING CONTROLS

Dear Mr. Chang:

You are named as a joint inventor in the above-identified United States patent application, filed under the provisions of 35 U.S.C. 116 (United States Code), and 37 CFR 1.47(a), Rules of Practice in Patent Cases. Should a patent be granted on the application you will be designated therein as a joint inventor.

As a named inventor you are entitled to inspect any paper in the file wrapper of the application, order copies of all or any part thereof (at a prepaid cost per 37 CFR 1.19) or make your position of record in the application. Alternatively, you may arrange to do any of the preceding through a registered patent attorney or agent presenting written authorization from you. If you care to join the application, counsel of record (see below) would presumably assist you. Joining the application would entail the filing of an appropriate oath or declaration by you pursuant to 37 CFR 1.63.

Telephone inquiries regarding this communication should be directed to Irvin Dingle at (571) 272-3210. Requests for information regarding your application should be directed to the File Information Unit at (703) 308-2733. Information regarding how to pay for and order a copy of the application, or a specific paper in the application, should be directed to the Certification Division at (703) 308-9726 or 1 (800) 972-6382 (outside the Washington, DC area).

/David Bucci/
Petition Examiner
Office of Petitions

cc: Venture Pacific Law, PC
5201 Great America Parkway, Suite 270
Santa Clara, CA 95054

UNITED STATES PATENT AND TRADEMARK OFFICE

Commissioner for Patents
United States Patent and Trademark Office
P.O. Box 1450
Alexandria, VA 22313-1450
www.uspto.gov

JOHN MCCORMACK
1402 104TH AVE SE
BELLEVUE, WA 98004

MAILED

MAR 28 2011

OFFICE OF PETITIONS

In re Application of
Timothy Fletcher
Application No. 12/620,593
Filed: November 18, 2009
Attorney Docket No.

DECISION ON PETITION
TO WITHDRAW
FROM RECORD

This is a decision on the Request to Withdraw as attorney or agent of record under 37 C.F.R. § 1.36(b), filed February 22, 2011.

The request is **NOT APPROVED**.

A grantable request to withdraw as attorney/agent of record must be signed by every attorney/agent seeking to withdraw or contain a clear indication that one attorney is signing on behalf of another/others.

The request cannot be approved because no reasons for withdrawal have been provided. The Office cannot, at this time, determine whether practitioner's request is one of the mandatory or permissive reasons enumerated in 37 CFR 10.40. Any subsequent requests must include reasons for withdrawal. Please note that there is a space provided for on PTO/SB/83 (Request to Withdraw as Attorney or Agent) to supply practitioner's reasons.

Petitioner should note that the Office will no longer accept address changes to a new practitioner of law firm filed with a Request, absent the filing of a power of attorney to the new representative. The Office will either change the correspondence address of record to the most current address information provided for the assignee of the entire interest who properly became of record under 37 CFR 3.71 or, the most current address information provided for the first named inventor.

Accordingly, since the request to withdraw from record does not include an acceptable current correspondence address for future communications from the Office, the request cannot be granted at the present time.

All future communications from the Office will continue to be directed to the above-listed address until otherwise notified by applicant.

Telephone inquiries concerning this decision should be directed to undersigned at 571-272-1642. All other inquiries concerning the examination or status of this application should be directed to the Technology Center.

/AMW/
April M. Wise
Petitions Examiner
Office of Petitions

Doc Code: PPH.PCT.652
Document Description: Petition to make special under PCT-Patent Pros Hwy

PTO/SB/20PCT-AU (01-11)
Approved for use through 01/31/2012. OMB 0651-0058
U.S. Patent and Trademark Office; U. S. DEPARTMENT OF COMMERCE
Under the Paperwork Reduction Act of 1995, no persons are required to respond to a collection of information unless it displays a valid OMB control number.

REQUEST FOR PARTICIPATION IN THE PATENT COOPERATION TREATY - PATENT PROSECUTION HIGHWAY (PCT-PPH) PILOT PROGRAM BETWEEN THE IP AUSTRALIA (IPAU) AND THE USPTO

Application No:	12/620,602	Filing date:	11/18/2009
First Named Inventor:	Doyeol Ahn		
Title of the Invention:	Copper Blend I-VII Compound Semiconductor Light-Emitting Devices		

THIS REQUEST FOR PARTICIPATION IN THE PCT-PPH PILOT PROGRAM ALONG WITH THE REQUIRED DOCUMENTS MUST BE SUBMITTED VIA EFS-WEB. INFORMATION REGARDING EFS-WEB IS AVAILABLE AT HTTP://WWW.USPTO.GOV/EBC/EFS_HELP.HTML

APPLICANT HEREBY REQUESTS PARTICIPATION IN THE PCT-PPH PROGRAM AND PETITIONS TO MAKE THE ABOVE-IDENTIFIED APPLICATION SPECIAL UNDER THE PCT-PPH PROGRAM.

The above-identified application is (1) a national stage entry of the corresponding PCT application, or (2) a national stage entry of another PCT application which claims priority to the corresponding PCT application, or (3) a national application that claims domestic/ foreign priority to the corresponding PCT application, or (4) a national application which forms the basis for the priority claim in the corresponding PCT application, or (5) a continuing application of a U.S. application that satisfies one of (1) to (4) above, or (6) a U.S. application that claims domestic benefit to a U.S. provisional application which forms the basis for the priority claim in the corresponding PCT application.

The corresponding PCT application number(s) is/are: PCT/KR2010/008118

The international filing date of the corresponding PCT application(s) is/are: 11/17/2010

I. List of Required Documents:

a. **A copy of the latest international work product (WO/ISA, WO/IPEA, or IPER) in the above–identified corresponding PCT application(s)**

☑ Is attached.

☐ Is not attached because the document is already in the U.S. application.

b. **A copy of all claims which were indicated as having novelty, inventive step and industrial applicability in the above-identified corresponding PCT application(s).**

☐ Is attached.

☑ Is not attached because the document is already in the U.S. application.

c. **English translations of the documents in a. and b. above are attached (if the documents are not in the English language). A statement that the English translation is accurate is attached for the document in b. above.**

This collection of information is required by 35 U.S.C. 119, 37 CFR 1.55, and 37 CFR 1.102(d). The information is required to obtain or retain a benefit by the public, which is to file (and by the USPTO to process) an application. Confidentiality is governed by 35 U.S.C. 122 and 37 CFR 1.11 and 1.14. This collection is estimated to take 2 hours to complete, including gathering, preparing, and submitting the completed application form to the USPTO. Time will vary depending upon the individual case. Any comments on the amount of time you require to complete this form and/or suggestions for reducing this burden should be sent to the Chief Information Officer, U.S. Patent and Trademark Office, U.S. Department of Commerce, P.O. Box 1450, Alexandria, VA 22313-1450. DO NOT SEND FEES OR COMPLETED FORMS TO THIS ADDRESS.

PTO/SB/20PCT-AU (01-11)
Approved for use through 01/31/2012. OMB 0651-0058
U.S.Patent and Trademark Office; U.S. DEPARTMENT OF COMMERCE
Under the Paperwork Reduction Act of 1995, no persons are required to respond to a collection of information unless it displays a valid OMB control number.

REQUEST FOR PARTICIPATION IN THE PCT-PPH PILOT PROGRAM BETWEEN THE IPAU AND THE USPTO

(continued)

Application No.:	12/620,602
First Named Inventor:	Doyeol Ahn

d. **(1) An information disclosure statement listing the documents cited in the international work products (ISR, WO/ISA, WO/IPEA, IPER) of the corresponding PCT application.**

☑ Is attached

☐ Has already been filed in the above-identified U.S. application on _____

(2) Copies of all documents (except) for U.S. patents or U.S. patent application publications)

☑ Are attached.

☐ Have already been filed in the above-identified U.S. application on _____

II. Claims Correspondence Table:

Claims in US Application	Patentable Claims in the corresponding PCT Application	Explanation regarding the correspondence
1-20	1-20	

III. All the claims in the US application sufficiently correspond to the patentable claims in the corresponding PCT application.

Signature /James J. Lynch Reg. No. 50,153/	Date March 11, 2011
Name (Print/Typed) James J. Lynch	Registration Number 50,153

Privacy Act Statement

The **Privacy Act of 1974 (P.L. 93-579)** requires that you be given certain information in connection with your submission of the attached form related to a patent application or patent. Accordingly, pursuant to the requirements of the Act, please be advised that: (1) the general authority for the collection of this information is 35 U.S.C. 2(b)(2); (2) furnishing of the information solicited is voluntary; and (3) the principal purpose for which the information is used by the U.S. Patent and Trademark Office is to process and/or examine your submission related to a patent application or patent. If you do not furnish the requested information, the U.S. Patent and Trademark Office may not be able to process and/or examine your submission, which may result in termination of proceedings or abandonment of the application or expiration of the patent.

The information provided by you in this form will be subject to the following routine uses:

1. The information on this form will be treated confidentially to the extent allowed under the Freedom of Information Act (5 U.S.C. 552) and the Privacy Act (5 U.S.C 552a). Records from this system of records may be disclosed to the Department of Justice to determine whether disclosure of these records is required by the Freedom of Information Act.
2. A record from this system of records may be disclosed, as a routine use, in the course of presenting evidence to a court, magistrate, or administrative tribunal, including disclosures to opposing counsel in the course of settlement negotiations.
3. A record in this system of records may be disclosed, as a routine use, to a Member of Congress submitting a request involving an individual, to whom the record pertains, when the individual has requested assistance from the Member with respect to the subject matter of the record.
4. A record in this system of records may be disclosed, as a routine use, to a contractor of the Agency having need for the information in order to perform a contract. Recipients of information shall be required to comply with the requirements of the Privacy Act of 1974, as amended, pursuant to 5 U.S.C. 552a(m).
5. A record related to an International Application filed under the Patent Cooperation Treaty in this system of records may be disclosed, as a routine use, to the International Bureau of the World Intellectual Property Organization, pursuant to the Patent Cooperation Treaty.
6. A record in this system of records may be disclosed, as a routine use, to another federal agency for purposes of National Security review (35 U.S.C. 181) and for review pursuant to the Atomic Energy Act (42 U.S.C. 218(c)).
7. A record from this system of records may be disclosed, as a routine use, to the Administrator, General Services, or his/her designee, during an inspection of records conducted by GSA as part of that agency's responsibility to recommend improvements in records management practices and programs, under authority of 44 U.S.C. 2904 and 2906. Such disclosure shall be made in accordance with the GSA regulations governing inspection of records for this purpose, and any other relevant (*i.e.*, GSA or Commerce) directive. Such disclosure shall not be used to make determinations about individuals.
8. A record from this system of records may be disclosed, as a routine use, to the public after either publication of the application pursuant to 35 U.S.C. 122(b) or issuance of a patent pursuant to 35 U.S.C. 151. Further, a record may be disclosed, subject to the limitations of 37 CFR 1.14, as a routine use, to the public if the record was filed in an application which became abandoned or in which the proceedings were terminated and which application is referenced by either a published application, an application open to public inspection or an issued patent.
9. A record from this system of records may be disclosed, as a routine use, to a Federal, State, or local law enforcement agency, if the USPTO becomes aware of a violation or potential violation of law or regulation.

UNITED STATES PATENT AND TRADEMARK OFFICE

UNITED STATES DEPARTMENT OF COMMERCE
United States Patent and Trademark Office
Address: COMMISSIONER FOR PATENTS
P.O. Box 1450
Alexandria, Virginia 22313-1450
www.uspto.gov

APPLICATION NO.	FILING DATE	FIRST NAMED INVENTOR	ATTORNEY DOCKET NO.	CONFIRMATION NO.
12/620,602	11/18/2009	Doyeol Ahn	005.P012	1900

65638 7590 04/12/2011

OMIKRON IP LAW GROUP
16325 Boones Ferry Rd.
SUITE 204
LAKE OSWEGO, OR 97035

EXAMINER	
YEUNG LOPEZ, FEIFEI	
ART UNIT	PAPER NUMBER
2826	

MAIL DATE	DELIVERY MODE
04/12/2011	PAPER

Please find below and/or attached an Office communication concerning this application or proceeding.

The time period for reply, if any, is set in the attached communication.

UNITED STATES PATENT AND TRADEMARK OFFICE

Commissioner for Patents
United States Patent and Trademark Office
P.O. Box 1450
Alexandria, VA 22313-1450
www.uspto.gov

OMIKRON IP LAW GROUP
16325 Boones Ferry Rd.
SUITE 204
LAKE OSWEGO OR 97035

In re Application of
Doyeol AHN
Application No.: 12/620,602 : **DECISION ON REQUEST TO**
Filed: 18 November 2009 : **PARTICIPATE IN THE PATENT**
Attorney Docket No.: 005.P012 : **PROSECUTION HIGHWAY**
For: COPPER BLEND I-VII : **PROGRAM AND PETITION**
COMPOUND SEMICONDUCTOR : **TO MAKE SPECIAL UNDER**
LIGHT-EMITTING DEVICES : **37 CFR 1.102(a)**

This is a decision on the request to participate in the PCT Patent Prosecution Highway (PCT-PPH) pilot program and the petition under 37 CFR 1.102(a), filed 11 March 2011, to make the above-identified application special.

The request and petition are **DISMISSED**.

Discussion

A grantable request to participate in the PCT-PPH pilot program and petition to make special require:

(1) The U.S. application must have an eligible relationship to one or more PCT applications where the ISA or IPEA are the JPO, EPO, KIPO, IPAU, Russia, Spain, Finland, Austria, or USPTO;

(2) At least one claim in the PCT application has novelty, inventive step, and industrial applicability and must be free of any observations in Box VIII in the latest work product in the international stage or applicant must identify and explain why the claim(s) is/are not subject to the observation in Box VIII;

(3) Applicant must submit a copy of the claim(s) from the PCT application(s) that have novelty, inventive step, and industrial applicability along with an English translation thereof and a statement that the English translation is accurate, if the claims are not in the English language;

(4) All the claims in the U.S. application must sufficiently correspond or be amended to sufficiently correspond to the claim(s) that have novelty, inventive step, and industrial applicability in the PCT application(s);

(5) Examination of the U.S. application has not begun;

(6) Applicant must submit a copy of the latest international work product from the PCT application indicating that the claim(s) have novelty, inventive step, and industrial applicability along with an English translation thereof and a statement that the English translation is accurate if the latest international work product is not in the English language;

(7) Applicant must submit an IDS listing the documents cited by the PCT examiner in the international work product along with copies of documents except U.S. patents or U.S. patent application publications.

Requirements (1-2) and (5-7) above are considered to have been met. However, the request to participate in the PPH pilot program and petition fails meet requirement (3).

Regarding the requirement of condition (3), applicant has filed to submit a copy of the claim from the PCT application that have novelty, inventive step, and industrial applicability along with an English translation thereof and a statement that the English translation is accurate, if the claims are not in the English language.

It cannot be determined whether condition (4) has been met since condition (3) has not been met.

Applicant is given **ONE** opportunity within a time period of **ONE MONTH or THIRTY DAYS**, whichever is longer, from the mailing date of this decision to correct the deficiencies. **NO EXTENSION OF TIME UNDER 37 CFR 1.136 IS PERMITTED.** If the deficiencies are not corrected with the time period given, the application will await action in its regular turn.

Response must be filed via the Electronic Filing System (EFS) using the document description: Petition to make special under PCT – Patent Pros Hwy. Any preliminary amendments and IDS submitted with the PPH documents must be separately indexed as a preliminary amendment and IDS, respectively.

Telephone inquiries concerning this decision should be directed to Lee W. Young at 571-272-4549.

All other inquiries concerning the examination or status of the application is accessible in the PAIR system at http://www.uspto.gov/ebc/index.html.

Lee W. Young
TQAS Technology Center 2800 - Semiconductors,
Electrical & Optical Systems & Components

Doc Code: PPH.PCT.652
Document Description: Petition to make special under PCT-Patent Pros Hwy

PTO/SB/20PCT-AU (01-11)
Approved for use through 01/31/2012. OMB 0651-0058
U.S. Patent and Trademark Office; U. S. DEPARTMENT OF COMMERCE
Under the Paperwork Reduction Act of 1995, no persons are required to respond to a collection of information unless it displays a valid OMB control number.

REQUEST FOR PARTICIPATION IN THE PATENT COOPERATION TREATY - PATENT PROSECUTION HIGHWAY (PCT-PPH) PILOT PROGRAM BETWEEN THE IP AUSTRALIA (IPAU) AND THE USPTO

Application No:	12/620,602	Filing date:	11/18/2009
First Named Inventor:	Doyeol Ahn		
Title of the Invention:	Copper Blend I-VII Compound Semiconductor Light-Emitting Devices		

THIS REQUEST FOR PARTICIPATION IN THE PCT-PPH PILOT PROGRAM ALONG WITH THE REQUIRED DOCUMENTS MUST BE SUBMITTED VIA EFS-WEB. INFORMATION REGARDING EFS-WEB IS AVAILABLE AT HTTP://WWW.USPTO.GOV/EBC/EFS_HELP.HTML

APPLICANT HEREBY REQUESTS PARTICIPATION IN THE PCT-PPH PROGRAM AND PETITIONS TO MAKE THE ABOVE-IDENTIFIED APPLICATION SPECIAL UNDER THE PCT-PPH PROGRAM.

The above-identified application is (1) a national stage entry of the corresponding PCT application, or (2) a national stage entry of another PCT application which claims priority to the corresponding PCT application, or (3) a national application that claims domestic/ foreign priority to the corresponding PCT application, or (4) a national application which forms the basis for the priority claim in the corresponding PCT application, or (5) a continuing application of a U.S. application that satisfies one of (1) to (4) above, or (6) a U.S. application that claims domestic benefit to a U.S. provisional application which forms the basis for the priority claim in the corresponding PCT application.

The corresponding PCT application number(s) is/are: PCT/KR2010/008118

The international filing date of the corresponding PCT application(s) is/are: 11/17/2010

I. List of Required Documents:

a. **A copy of the latest international work product (WO/ISA, WO/IPEA, or IPER) in the above–identified corresponding PCT application(s)**

☑ Is attached.

☐ Is not attached because the document is already in the U.S. application.

b. **A copy of all claims which were indicated as having novelty, inventive step and industrial applicability in the above-identified corresponding PCT application(s).**

☑ Is attached.

☐ Is not attached because the document is already in the U.S. application.

c. **English translations of the documents in a. and b. above are attached (if the documents are not in the English language). A statement that the English translation is accurate is attached for the document in b. above.**

This collection of information is required by 35 U.S.C. 119, 37 CFR 1.55, and 37 CFR 1.102(d). The information is required to obtain or retain a benefit by the public, which is to file (and by the USPTO to process) an application. Confidentiality is governed by 35 U.S.C. 122 and 37 CFR 1.11 and 1.14. This collection is estimated to take 2 hours to complete, including gathering, preparing, and submitting the completed application form to the USPTO. Time will vary depending upon the individual case. Any comments on the amount of time you require to complete this form and/or suggestions for reducing this burden should be sent to the Chief Information Officer, U.S. Patent and Trademark Office, U.S. Department of Commerce, P.O. Box 1450, Alexandria, VA 22313-1450. DO NOT SEND FEES OR COMPLETED FORMS TO THIS ADDRESS.

PTO/SB/20PCT-AU (01-11)
Approved for use through 01/31/2012. OMB 0651-0058
U.S.Patent and Trademark Office; U.S. DEPARTMENT OF COMMERCE
Under the Paperwork Reduction Act of 1995, no persons are required to respond to a collection of information unless it displays a valid OMB control number.

REQUEST FOR PARTICIPATION IN THE PCT-PPH PILOT PROGRAM BETWEEN THE IPAU AND THE USPTO

(continued)

Application No.:	12/620,602
First Named Inventor:	Doyeol Ahn

d. **(1) An information disclosure statement listing the documents cited in the international work products (ISR, WO/ISA, WO/IPEA, IPER) of the corresponding PCT application.**

☐ Is attached

☑ Has already been filed in the above-identified U.S. application on 3/11/2011

(2) Copies of all documents (except) for U.S. patents or U.S. patent application publications)

☐ Are attached.

☑ Have already been filed in the above-identified U.S. application on 3/11/2011

II. Claims Correspondence Table:

Claims in US Application	Patentable Claims in the corresponding PCT Application	Explanation regarding the correspondence
1-20	1-20	

III. All the claims in the US application sufficiently correspond to the patentable claims in the corresponding PCT application.

Signature /James J. Lynch Reg. No. 50,153/	Date April 28, 2011
Name (Print/Typed) James J. Lynch	Registration Number 50,153

Privacy Act Statement

The **Privacy Act of 1974 (P.L. 93-579)** requires that you be given certain information in connection with your submission of the attached form related to a patent application or patent. Accordingly, pursuant to the requirements of the Act, please be advised that: (1) the general authority for the collection of this information is 35 U.S.C. 2(b)(2); (2) furnishing of the information solicited is voluntary; and (3) the principal purpose for which the information is used by the U.S. Patent and Trademark Office is to process and/or examine your submission related to a patent application or patent. If you do not furnish the requested information, the U.S. Patent and Trademark Office may not be able to process and/or examine your submission, which may result in termination of proceedings or abandonment of the application or expiration of the patent.

The information provided by you in this form will be subject to the following routine uses:

1. The information on this form will be treated confidentially to the extent allowed under the Freedom of Information Act (5 U.S.C. 552) and the Privacy Act (5 U.S.C 552a). Records from this system of records may be disclosed to the Department of Justice to determine whether disclosure of these records is required by the Freedom of Information Act.
2. A record from this system of records may be disclosed, as a routine use, in the course of presenting evidence to a court, magistrate, or administrative tribunal, including disclosures to opposing counsel in the course of settlement negotiations.
3. A record in this system of records may be disclosed, as a routine use, to a Member of Congress submitting a request involving an individual, to whom the record pertains, when the individual has requested assistance from the Member with respect to the subject matter of the record.
4. A record in this system of records may be disclosed, as a routine use, to a contractor of the Agency having need for the information in order to perform a contract. Recipients of information shall be required to comply with the requirements of the Privacy Act of 1974, as amended, pursuant to 5 U.S.C. 552a(m).
5. A record related to an International Application filed under the Patent Cooperation Treaty in this system of records may be disclosed, as a routine use, to the International Bureau of the World Intellectual Property Organization, pursuant to the Patent Cooperation Treaty.
6. A record in this system of records may be disclosed, as a routine use, to another federal agency for purposes of National Security review (35 U.S.C. 181) and for review pursuant to the Atomic Energy Act (42 U.S.C. 218(c)).
7. A record from this system of records may be disclosed, as a routine use, to the Administrator, General Services, or his/her designee, during an inspection of records conducted by GSA as part of that agency's responsibility to recommend improvements in records management practices and programs, under authority of 44 U.S.C. 2904 and 2906. Such disclosure shall be made in accordance with the GSA regulations governing inspection of records for this purpose, and any other relevant (*i.e.*, GSA or Commerce) directive. Such disclosure shall not be used to make determinations about individuals.
8. A record from this system of records may be disclosed, as a routine use, to the public after either publication of the application pursuant to 35 U.S.C. 122(b) or issuance of a patent pursuant to 35 U.S.C. 151. Further, a record may be disclosed, subject to the limitations of 37 CFR 1.14, as a routine use, to the public if the record was filed in an application which became abandoned or in which the proceedings were terminated and which application is referenced by either a published application, an application open to public inspection or an issued patent.
9. A record from this system of records may be disclosed, as a routine use, to a Federal, State, or local law enforcement agency, if the USPTO becomes aware of a violation or potential violation of law or regulation.

UNITED STATES PATENT AND TRADEMARK OFFICE

UNITED STATES DEPARTMENT OF COMMERCE
United States Patent and Trademark Office
Address: COMMISSIONER FOR PATENTS
P.O. Box 1450
Alexandria, Virginia 22313-1450
www.uspto.gov

APPLICATION NO.	FILING DATE	FIRST NAMED INVENTOR	ATTORNEY DOCKET NO.	CONFIRMATION NO.
12/620,602	11/18/2009	Doyeol Ahn	005.P012	1900

65638 7590 05/11/2011

OMIKRON IP LAW GROUP
16325 Boones Ferry Rd.
SUITE 204
LAKE OSWEGO, OR 97035

EXAMINER	
YEUNG LOPEZ, FEIFEI	
ART UNIT	**PAPER NUMBER**
2826	

MAIL DATE	DELIVERY MODE
05/11/2011	PAPER

Please find below and/or attached an Office communication concerning this application or proceeding.

The time period for reply, if any, is set in the attached communication.

UNITED STATES PATENT AND TRADEMARK OFFICE

Commissioner for Patents
United States Patent and Trademark Office
P.O. Box 1450
Alexandria, VA 22313-1450
www.uspto.gov

OMIKRON IP LAW GROUP
16325 Boones Ferry Rd.
SUITE 204
LAKE OSWEGO OR 97035

In re Application of
Doyeol AHN
Application No.: 12/620,602 : **DECISION ON REQUEST TO**
Filed: 18 November 2009 : **PARTICIPATE IN THE PATENT**
Attorney Docket No.: 005.P012 : **PROSECUTION HIGHWAY**
For: COPPER BLEND I-VII : **PROGRAM AND PETITION**
COMPOUND SEMICONDUCTOR : **TO MAKE SPECIAL UNDER**
LIGHT-EMITTING DEVICES : **37 CFR 1.102(a)**

This is a decision on the request to participate in the PCT Patent Prosecution Highway (PCT-PPH) pilot program and the petition under 37 CFR 1.102(a), filed 11 March 2011 and renewed on 28 April 2011, to make the above-identified application special.

The request and petition are **GRANTED**.

Discussion

A grantable request to participate in the PCT-PPH pilot program and petition to make special require:

(1) The U.S. application must have an eligible relationship to one or more PCT applications where the ISA or IPEA are the JPO, EPO, KIPO, or USPTO;

(2) At least one claim in the PCT application has novelty, inventive step, and industrial applicability and must be free of any observations in Box VIII in the latest work product in the international stage or applicant must identify and explain why the claim(s) is/are not subject to the observation in Box VIII;

(3) Applicant must submit a copy of the claim(s) from the PCT application(s) that have novelty, inventive step, and industrial applicability along with an English translation thereof and a statement that the English translation is accurate, if the claims are not in the English language;

(4) All the claims in the U.S. application must sufficiently correspond or be amended to sufficiently correspond to the claim(s) that have novelty, inventive step, and industrial applicability in the PCT application(s);

(5) Examination of the U.S. application has not begun;

(6) Applicant must submit a copy of the latest international work product from the PCT application indicating that the claim(s) have novelty, inventive step, and industrial applicability along with an English translation thereof and a statement that the English translation is accurate if the latest international work product is not in the English language;

(7) Applicant must submit an IDS listing the documents cited by the PCT examiner in the international work product along with copies of documents except U.S. patents or U.S. patent application publications.

The request to participate in the PCT-PPH pilot program and petition comply with the above requirements. Accordingly, the above-identified application has been accorded "special" status.

Telephone inquiries concerning this decision should be directed to Lee W. Young at 571-272-4549.

All other inquiries concerning the examination or status of the application is accessible in the PAIR system at http://www.uspto.gov/ebc.index.html.

This application will be forwarded to the examiner for action on the merits commensurate with this decision once this application's formality reviews have been completed.

Lee W. Young
TQAS Technology Center 2800 - Semiconductors,
Electrical & Optical Systems & Components

UNITED STATES PATENT AND TRADEMARK OFFICE

UNITED STATES DEPARTMENT OF COMMERCE
United States Patent and Trademark Office
Address: COMMISSIONER FOR PATENTS
P.O. Box 1450
Alexandria, Virginia 22313-1450
www.uspto.gov

APPLICATION NO.	FILING DATE	FIRST NAMED INVENTOR	ATTORNEY DOCKET NO.	CONFIRMATION NO.
12/620,648	11/18/2009	Hiroyasu KAWAUCHI	P37414	1982

7590 02/24/2011

GREENBLUM & BERNSTEIN, P.L.C.
1950 ROLAND CLARKE PLACE
RESTON, VA 20191

EXAMINER	
ART UNIT	PAPER NUMBER
2821	
NOTIFICATION DATE	DELIVERY MODE
02/24/2011	ELECTRONIC

DECISION GRANTING PETITION UNDER 37 CFR 1.138(d)

The declaration of express abandonment is recognized

This is in response to the petition under 37 CFR 1.138(d), requesting for a refund of any previously paid search fee and excess claims fee in the above-identified application.

The petition is granted.

The express abandonment is recognized. Any previously paid search fee and excess claims fee are hereby refunded.

Telephone inquiries should be directed to the Office of Data Management at (571) 272-4200.

Patent Publication Branch
Office of Data Management

UNITED STATES PATENT AND TRADEMARK OFFICE

UNITED STATES DEPARTMENT OF COMMERCE
United States Patent and Trademark Office
Address: COMMISSIONER FOR PATENTS
P.O. Box 1450
Alexandria, Virginia 22313-1450
www.uspto.gov

APPLICATION NO.	FILING DATE	FIRST NAMED INVENTOR	ATTORNEY DOCKET NO.	CONFIRMATION NO.
12/620,655	11/18/2009	Raphaël Marcelpoil	035735/381870	1991

7590 06/24/2011

ALSTON & BIRD LLP
BANK OF AMERICA PLAZA
101 SOUTH TRYON STREET, SUITE 4000
CHARLOTTE, NC 28280-4000

EXAMINER	
MUI, CHRISTINE T	
ART UNIT	**PAPER NUMBER**
1774	
MAIL DATE	**DELIVERY MODE**
06/24/2011	PAPER

ACKNOWLEDGEMENT OF REQUEST

Notice of Allowance/Allowability Mailed

The request to print a color drawing reference as the first paragraph in the portion of the specification containing a brief description of the drawings as required by 37 CFR 1.84 and MPEP § 608.02 has been received by the United States Patent and Trademark Office and will be entered into the specification.

571-272-4200 or 1-888-786-0101
Application Assistance Unit
Office of Data Management

UNITED STATES PATENT AND TRADEMARK OFFICE

Commissioner for Patents
United States Patent and Trademark Office
P.O. Box 1450
Alexandria, VA 22313-1450
www.uspto.gov

June 23, 2011

ALSTON & BIRD LLP
BANK OF AMERICA PLAZA
101 SOUTH TRYON STREET, SUITE 4000
CHARLOTTE NC 28280-4000

Re Application of
MARCELPOIL, RAPHAEL, ET AL.
Application: **12/620655**
Filed: **11/18/2009**
Attorney Docket No: **035735/381870**

: DECISION ON PETITION
: ACCEPTANCE OF COLOR
: DRAWINGS
:

This is a decision on the Renewal of Petition to Accept Color Drawings under 37 C.F.R 1.84 (a) (2), received in the United States Patent and Trademark Office (USPTO) November 18, 2009
The petition is **GRANTED**.
A grantable petition under 37 C.F.R. 1.84(a) (2) must be accompanied by the following.

1. The fee set forth under 37 C.F.R. 1.17(h),
2. Three (3) sets of the color drawings in question, or (1) set if filed via EFS, and
3. The specification containing the following language as the first paragraph in that portion of the specification relating to the brief description of the drawings.

   "The file of this patent contains at least one drawing executed in color. Copies of this patent with color drawing(s) will be provided by the Patent and Trademark Office upon request and payment of the necessary fee."

The petition was accompanied by all of the required fees and drawings. The specification contains the appropriate language. Therefore, the petition is GRANTED.

Telephone inquires relating to this decision may be directed to the undersigned in the Office of Data Management at 571-272-4200.

/Bernadette Queen/
Quality Control Specialist
Office of Data Management
Publications Branch

Doc Code: PPH.PET.652

Document Description: Petition to make special under Patent Pros Hwy

PTO/SB/20JP (05-10)
Approved for use through 01/31/2012. OMB 0651-0058
U.S. Patent and Trademark Office; U.S. DEPARTMENT OF COMMERCE

Under the Paperwork Reduction Act of 1995, no persons are required to respond to a collection of information unless it displays a valid OMB control number.

REQUEST FOR PARTICIPATION IN THE PATENT PROSECUTION HIGHWAY (PPH) PROGRAM BETWEEN THE JAPAN PATENT OFFICE (JPO) AND THE USPTO

Application No.:	12/620,717	Filing Date:	11/18/2009
First Named Inventor:	Shioya KAGEYAMA, et al.		
Attorney Docket No.:	350951US71		
Title of the Invention:	ON-BOARD APPARATUS AND METHOD USED BY SAID APPARATUS		

THIS REQUEST FOR PARTICIPATION IN THE PPH PROGRAM ALONG WITH THE REQUIRED DOCUMENTS MUST BE SUBMITTED VIA EFS-WEB. INFORMATION REGARDING EFS-WEB IS AVAILABLE AT HTTP://WWW.USPTO.GOV/EBC/EFS_HELP.HTML.

APPLICANT HEREBY REQUESTS PARTICIPATION IN THE PATENT PROSECUTION HIGHWAY (PPH) PROGRAM AND PETITIONS TO MAKE THE ABOVE-IDENTIFIED APPLICATION SPECIAL UNDER THE PPH PROGRAM.

The above-identified application (1) validly claims priority under 35 U.S.C. 119(a) and 37 CFR 1.55 to one or more corresponding JPO application(s) or to a PCT application that does not contain any priority claim, or (2) is a national stage entry of a PCT application that does not contain any priority claim.

The JPO/PCT application number(s) is/are: JP2008-303888

The filing date of the JPO/ PCT application(s) is/are: November 28, 2008

I. **List of Required Documents:**

a. **A copy of the latest JPO office actions (other than "Decision to Grant a Patent"*) in the above-identified JPO application(s)**

☑ Is attached. See Appendix A

☐ Is not attached because the JPO application was allowed in a first office action.

*It is not necessary to submit a copy of the "Decision to Grant a Patent" and an English translation thereof.

b. **A copy of all claims which were determined to be patentable by the JPO in the above-identified JPO application(s)**

☑ Is attached. See Appendix B

c. **English translations of the documents in a. and b. above along with a statement that the English translations are accurate are attached (if the documents are not in the English language). An accuracy statement for the English translation of the documents in a. above is not required if the English translation is a machine translation provided by the JPO** See Appendices C and D, respectively

d. **(1) An information disclosure statement listing the documents cited in the JPO office actions**

☐ Is attached.

☑ Has already been filed in the above-identified U.S. application on January 21, 2011

(2) Copies of all documents (except for U.S. patents or U.S. patent application publications)

☐ Are attached.

☑ Have already been filed in the above-identified U.S. application on January 21, 2011

This collection of information is required by 35 U.S.C. 119, 37 CFR 1.55, and 37 CFR 1.102(d). The information is required to obtain or retain a benefit by the public, which is to file (and by the USPTO to process) an application. Confidentiality is governed by 35 U.S.C. 122 and 37 CFR 1.11 and 1.14. This collection is estimated to take 2 hours to complete, including gathering, preparing, and submitting the completed application form to the USPTO. Time will vary depending upon the individual case. Any comments on the amount of time you require to complete this form and/or suggestions for reducing this burden should be sent to the Chief Information Officer, U.S. Patent and Trademark Office, U.S. Department of Commerce, P.O. Box 1450, Alexandria, VA 22313-1450. DO NOT SEND FEES OR COMPLETED FORMS TO THIS ADDRESS.

PTO/SB/20JP (05-10)
Approved for use through 01/31/2012. OMB 0651-0058
U.S.Patent and Trademark Office; U.S. DEPARTMENT OF COMMERCE
Under the Paperwork Reduction Act of 1995, no persons are required to respond to a collection of information unless it displays a valid OMB control number.

REQUEST FOR PARTICIPATION IN THE PATENT PROSECUTION HIGHWAY (PPH) BETWEEN THE JAPAN PATENT OFFICE (JPO) AND THE USPTO

(continued)

Application No.:	12/620,717
First Named Inventor:	Shioya KAGEYAMA, et al.

II. Claims Correspondence Table:

Claims in US Application	Patentable Claims in JPO Application	Explanation regarding the correspondence
1	1	substantially identical, means language removed
2-3		canceled
4	2	substantially identical, means language removed
5	3	substantially identical, means language removed
6	4	substantially identical, means language removed
7	5	substantially identical, means language removed
8	6	substantially identical, means language removed
9	7	substantially identical, means language removed
10	8	substantially identical, means language removed
11	9	substantially identical, means language removed
12	10	substantially identical, means language & multiple dep removed
13	11	substantially identical, means language removed
14	12	substantially identical, means language removed
15	13	substantially identical, means language removed
16	14	substantially identical, means language & multiple dep removed
17		canceled
18	16	substantially identical, step language removed
19	15	substantially identical, means language & multiple dep removed

III. All the claims in the US application sufficiently correspond to the patentable/allowable claims in the JPO application. See also the Preliminary Amendment, Appendix E

Signature	Date 20/JUL/11
Name (Print/Typed) Ryan W. Smith	Registration Number 62,257

Request for Participation in the Patent Prosecution Highway Program
U.S. Patent Application No. 12/620,717
Attorney's Docket No: 350951US71

APPENDIX A

Copy of latest JPO Office Action

拒絶理由通知書

特許出願の番号	特願２００８－３０３８８８
起案日	平成２２年１１月２６日
特許庁審査官	中村　則夫　　９１４８　３Ｈ００
特許出願人代理人	小笠原　史朗（外　１名）　様
適用条文	第２９条第１項、第２９条第２項、第３６条、第３７条

この出願は、次の理由によって拒絶をすべきものです。これについて意見がありましたら、この通知書の発送の日から６０日以内に意見書を提出してください。

理　由

【１】この出願は下記の点で特許法第３７条に規定する要件を満たしていない。

記

以下の【２】に示すとおり、請求項１に係る発明は先行技術に対する特別な技術的特徴を有さないから、請求項１に係る発明と請求項２～１６に係る発明との間には、同一の又は対応する特別な技術的特徴を見出すことができない。ただし、請求項２～１０、１６に係る発明については、審査基準に基づき、例外的に発明の単一性の要件を問わないこととする（第Ｉ部第２章４．２を参照）。

以上のように、請求項１に係る発明と請求項１１～１５に係る発明とは、発明の単一性の要件を満たす一群の発明に該当しないから、この出願は特許法第３７条に規定する要件を満たさない。

なお、請求項１～１０、１６以外の請求項に係る発明については特許法第３７条以外の要件の審査を行っていない。

【２】この出願の下記の請求項に係る発明は、その出願前に日本国内又は外国において、頒布された下記の刊行物に記載された発明又は電気通信回線を通じて公衆に利用可能となった発明であるから、特許法第２９条第１項第３号に該当し、特許を受けることができない。

記

＜請求項１、１６＞

・刊行物１　国際公開第２００８／１１３６３７号
（特表２０１０－５００６７８号公報参照）

・備考

刊行物１には、車両が走行している車線が、例えば追い越し車線というあらかじめ定められた車線の種類であるとき、車両に搭載されている支援装置の動作の開始タイミングを変更させる区画線認識装置が開示されている。（段落００１８

等を参照のこと。）

【３】この出願の下記の請求項に係る発明は、その出願前に日本国内又は外国において、頒布された下記の刊行物に記載された発明又は電気通信回線を通じて公衆に利用可能となった発明に基いて、その出願前にその発明の属する技術の分野における通常の知識を有する者が容易に発明をすることができたものであるから、特許法第２９条第２項の規定により特許を受けることができない。

記

＜請求項１～１０、１６＞

・刊行物１　国際公開第２００８／１１３６３７号
（特表２０１０－５００６７８号公報参照）
刊行物２　特開２００８－１２３３４８号公報

・備考

刊行物１には、車両が走行している車線が、例えば追い越し車線というあらかじめ定められた車線の種類であるとき、車両に搭載されている支援装置の動作の開始タイミングを変更させる区画線認識装置が開示されている。（段落００１８等を参照のこと。）

刊行物２には、カープールレーンという車線の種類を認識することが開示されている。なお、刊行物２には、カープールレーンという車線の種類を認識するのに、路面に描かれた左右の表示車線の数を比較することによって行うことも開示されている。

請求項４～７に関連して、路面に描かれた左右の表示車線の数の比較を、画像のどの区画において行うかは設計的事項にすぎない。

【４】この出願は、特許請求の範囲の記載が下記の点で、特許法第３６条第６項第１号に規定する要件を満たしていない。

記

＜請求項７＞

「左領域、及び右領域のそれぞれにおける遠方領域において、それぞれ区画線の数が１以上特定され、右領域における遠方領域の区画線の数から左領域における近傍領域の区画線の数を引いた差が２以上であるとき」というのに対応する事項が、発明の詳細な説明のいずれに開示されているのか明りょうでない。

＜補正の示唆＞

請求項１を引用する請求項２に係る発明に、特別な技術的特徴を有することが見いだされた。

したがって、特許請求の範囲を補正する際には、特許法第１７条の２第４項の要件違反とならないように、補正後の特許請求の範囲の発明が、請求項１を引用する請求項２に係る発明の発明特定事項をすべて含む同一カテゴリーの発明となるように補正することを検討されたい（「特許・実用新案　審査基準」第ＩＩＩ部第ＩＩ節４．３．１を参照）。

・調査した分野（ＩＰＣ）　　Ｇ０８Ｇ　　１／１６
　　Ｂ６０Ｒ　２１／００

この先行技術文献調査結果の記録は拒絶理由を構成するものではありません。

－－－－－－－－－－－－－－－－－－－－－－－－－－－－－－－－－－－－

この拒絶理由通知の内容に関するお問い合わせがありましたら、以下までご連絡下さい。

特許審査第二部　自動制御　中村則夫
ＴＥＬ．０３（３５８１）１１０１　内線３３１４
ＦＡＸ．０３（３５０１）０６７１

部長／代理	審査長／代理	審査官	審査官補
	村上　哲	中村　則夫	
	９０３９	９１４８	

Request for Participation in the Patent Prosecution Highway Program
U.S. Patent Application No. 12/620,717
Attorney's Docket No: 350951US71

APPENDIX B

Copy of Claims determined to be patentable by JPO

(19)日本国特許庁(JP)　(12)特　許　公　報(B2)　(11)特許番号
特許第4692613号
(P4692613)
(45)発行日　平成23年6月1日(2011.6.1)　(24)登録日　平成23年3月4日(2011.3.4)

(51)Int.Cl.		F I		
G08G 1/16	(2006.01)	G08G	1/16	C
B60R 21/00	(2006.01)	B60R	21/00	624F
B60R 22/46	(2006.01)	B60R	22/46	
B60T 7/12	(2006.01)	B60R	21/00	624B
B60T 8/17	(2006.01)	B60R	21/00	626A

請求項の数 16　(全 19 頁)　最終頁に続く

(21)出願番号　特願2008-303888 (P2008-303888)
(22)出願日　平成20年11月28日 (2008.11.28)
(65)公開番号　特開2010-128862 (P2010-128862A)
(43)公開日　平成22年6月10日 (2010.6.10)
審査請求日　平成21年9月22日 (2009.9.22)

(73)特許権者　000003207
トヨタ自動車株式会社
愛知県豊田市トヨタ町１番地
(74)代理人　100098291
弁理士　小笠原　史朗
(74)代理人　100151541
弁理士　高田　猛二
(72)発明者　影山　潮矢
愛知県豊田市トヨタ町１番地　トヨタ自動車株式会社内
(72)発明者　玉置　友康
愛知県豊田市花本町井前１番地２１　トヨタテクニカルディベロップメント株式会社内

最終頁に続く

(54)【発明の名称】車載装置、及び当該装置で用いられる方法

(57)【特許請求の範囲】

【請求項１】

車両の走行方向を撮像した画像に基づき区画線を認識する区画線認識装置であって、

前記車両が走行している車線の種類を前記画像に基づいて特定する車線特定手段と、

前記車線特定手段によって特定された車線の種類が予め定められた車線の種類であるとき、前記車両に搭載されている支援装置の動作の開始タイミングを変更させる変更指示を当該支援装置に与えるタイミング変更手段とを備え、

前記車線特定手段は、

前記画像においてそれぞれ予め定められた左側の左領域と、右側の右領域とに撮像されている区画線の数を前記画像に基づいて特定し、前記左領域、及び前記右領域のそれぞれにおいて、さらに、前記走行方向の遠方が撮像された遠方領域と前記走行方向の近傍が撮像された近傍領域として予め定められた領域に撮像されている区画線の数を前記画像に基づいて特定する区画線計数手段と、

前記近傍領域、および前記遠方領域の、前記右領域に撮像されている区画線の数と、前記左領域に撮像されている区画線の数に基づいて、前記車線の種類が前記カープールレーンであるか否か特定するカープールレーン特定手段とを含み、

前記タイミング変更手段は、前記車線特定手段によって特定された前記車線の種類がカープールレーンであるとき、前記変更指示を与えることを特徴とする、区画線認識装置。

【請求項２】

前記カープールレーン特定手段は、前記区画線計数手段によって計数された前記右領域

に撮像されている区画線の数が、前記左領域に撮像されている区画線の数以上であるとき、前記車線の種類を前記カープールレーンとして特定する、請求項1に記載の区画線認識装置。

【請求項３】

前記カープールレーン特定手段は、前記近傍領域、及び前記遠方領域の少なくともいずれか一方において、前記右領域に撮像されている区画線の数が、前記左領域に撮像されている区画線の数以上であるとき、前記車線の種類を前記カープールレーンとして特定する、請求項1に記載の区画線認識装置。

【請求項４】

前記カープールレーン特定手段は、前記区画線計数手段によって、前記左領域、及び前記右領域のそれぞれにおける前記近傍領域、及び前記遠方領域において、それぞれ前記区画線の数が１以上特定され、前記右領域における前記近傍領域の区画線の数が、前記左領域における前記近傍領域の区画線の数以上であり、且つ前記右領域における前記遠方領域の区画線の数が、前記左領域における前記近傍領域の区画線の数以上であるとき、前記車線の種類を前記カープールレーンとして特定する、請求項3に記載の区画線認識装置。

【請求項５】

前記カープールレーン特定手段は、前記区画線計数手段によって、前記左領域、及び前記右領域のそれぞれにおける前記近傍領域において、それぞれ前記区画線の数が１以上特定され、前記右領域における前記近傍領域の区画線の数から前記左領域における前記近傍領域の区画線の数を引いた差が２以上であるとき、前記車線の種類を前記カープールレーンとして特定する、請求項3に記載の区画線認識装置。

【請求項６】

前記カープールレーン特定手段は、前記区画線計数手段によって、前記左領域、及び前記右領域のそれぞれにおける前記遠方領域において、それぞれ前記区画線の数が１以上特定され、前記右領域における前記遠方領域の区画線の数から前記左領域における前記遠方領域の区画線の数を引いた差が２以上であるとき、前記車線の種類を前記カープールレーンとして特定する、請求項3に記載の区画線認識装置。

【請求項７】

前記タイミング変更手段は、前記支援装置として前記車両に搭載される予防安全装置に対して前記変更指示を与える、請求項１に記載の区画線認識装置。

【請求項８】

前記タイミング変更手段は、前記支援装置として前記車両に搭載される車線逸脱警報装置に対して前記変更指示を与える、請求項１に記載の区画線認識装置。

【請求項９】

前記タイミング変更手段は、前記開始タイミングを早める前記変更指示を前記支援装置に与える、請求項１に記載の区画線認識装置。

【請求項１０】

請求項１乃至９の何れか１項に記載の区画線認識装置と、前記車両と対象物とが衝突したときの安全性を高めるための予防安全装置とを備える予防安全システムであって、

前記予防安全装置は、

前記変更指示を取得する取得手段と、

前記対象物の相対距離、及び相対速度を測定する測定部と、

前記測定部によって測定された前記対象物との相対距離、及び相対速度に基づき、前記車両と当該対象物とが衝突するまでの時間を算出する算出手段と、

前記算出手段によって算出された前記時間が予め定められたしきい値以下であるとき、安全性を高めるための動作を開始する動作手段と、

前記取得手段が前記変更指示を取得したとき、前記しきい値をより大きく再設定する再設定手段とを備える、予防安全システム。

【請求項１１】

前記動作手段は、前記算出手段によって算出された前記時間が前記再設定手段によって

再設定されたしきい値以下であるとき、前記車両の運転者に対して警報を発する動作を開始する、請求項１０に記載の予防安全システム。

【請求項１２】

前記動作手段は、前記算出手段によって算出された前記時間が前記再設定手段によって再設定されたしきい値以下であるとき、前記車両のブレーキの動作を開始する、請求項１１に記載の予防安全システム。

【請求項１３】

前記動作手段は、前記算出手段によって算出された前記時間が前記再設定手段によって再設定されたしきい値以下であるとき、前記車両の搭乗者に装着されているシートベルトを巻き取る動作を開始する、請求項１１に記載の予防安全システム。

【請求項１４】

請求項１乃至９の何れか１項に記載の区画線認識装置と、前記車両が走行している車線から逸脱する可能性があると判断したときに車線から逸脱する可能性があることを報知する車線逸脱警報装置とを備える車線逸脱警報システムであって、

前記車線逸脱警報装置は、

前記画像に基づきそれぞれ測定された、前記車両の走行している車線の車線幅と、当該車線の中心から前記車両の幅方向の中心までのずれ量とをそれぞれ示す走行路情報を取得する第２の取得手段と、

前記走行路情報によって示される車線幅に基づき、前記車両の走行している車線の中心から左右の区画線のいずれか一方までの幅を算出する第１の算出手段と、

前記第１の算出手段によって算出された前記幅から予め定められたしきい値を引いた差を算出する第２の算出手段と、

前記走行路情報によって示される前記ずれ量と、前記車両の幅方向の中心から当該車両の左右のいずれか一方の最大幅とを加算した和を算出する第３の算出手段と、

前記第３の算出手段によって算出された和が、前記第２の算出手段によって算出された差以上となるとき、前記車両の運転者に対して警報を発する動作を開始する動作手段と、

前記第１の取得手段が前記変更指示を取得したとき、前記しきい値をより大きく再設定する再設定手段とを備える、車線逸脱警報システム。

【請求項１５】

請求項１乃至９の何れか１項に記載の区画線認識装置と、前記車両が常に車線の幅方向の中心に沿って走行するように制御する車線維持装置とを備える車線維持システムであって、

前記車線維持装置は、

前記画像に基づきそれぞれ測定された、前記車両の走行している車線の車線幅と、当該車線の中心から前記車両の幅方向の中心までのずれ量とをそれぞれ示す走行路情報を取得する第２の取得手段と、

前記走路情報を取得すると、前記ずれ量がゼロになるように、前記車両の転舵輪を操舵するための操舵トルクを発生させて、前記車両が常に走行している車線の幅方向の中心にそって走行するよう制御する操舵手段とを備える、車線維持システム。

【請求項１６】

車両の走行方向を撮像した画像に基づき区画線を認識する区画線認識装置で実行される区画線認識方法であって、

前記車両が走行している車線の種類を前記画像に基づいて特定する車線特定ステップと、

前記車線特定ステップにおいて特定された車線の種類に基づいて、前記車両に搭載されている支援装置の動作の開始タイミングを変更させる変更指示を当該支援装置に与えるタイミング変更ステップとを備え、

前記車線特定ステップは、

前記画像においてそれぞれ予め定められた左側の左領域と、右側の右領域とに撮像さ

れている区画線の数を前記画像に基づいて特定し、前記左領域、及び前記右領域のそれぞれにおいて、さらに、前記走行方向の遠方が撮像された遠方領域と前記走行方向の近傍が撮像された近傍領域として予め定められた領域に撮像されている区画線の数を前記画像に基づいて特定する区画線計数ステップと、

前記近傍領域、および前記遠方領域の、前記右領域に撮像されている区画線の数と、前記左領域に撮像されている区画線の数に基づいて、前記車線の種類が前記カープールレーンであるか否か特定するカープールレーン特定ステップとを含み、

前記タイミング変更ステップでは、前記車線特定ステップによって特定された前記車線の種類がカープールレーンであるとき、前記変更指示を与えることを特徴とする、区画線認識方法。

【発明の詳細な説明】

【技術分野】

【０００１】

本発明は、区画線認識装置、及び当該装置で実行される区画線認識方法に関する発明であり、より特定的には、車両などの移動体に搭載される区画線認識装置、及び当該装置で実行される区画線認識方法に関する。

【背景技術】

【０００２】

事故を起こす可能性を低減するため、例えば、走行している車線の区画線との間隔が予め定められたしきい値以下となったときに、走行中の車線から逸脱する危険があると判断して、逸脱する危険を運転者に通知する車線逸脱警報装置や、レーダで測定した対象物（例えば、他車両、及び歩行者など）との相対位置、及び相対速度などに基づく数値が予め定めたしきい値以下となったときに自動的にブレーキを作動させたり、自動的にシートベルトを巻き取ってたるみを取り除いたりする予防安全装置などの支援装置が、近年開発されている車両には搭載されている。このような支援装置の一例として、例えば、特許文献１に記載の車線逸脱防止装置（以下、従来技術と称する）が挙げられる。

【０００３】

従来技術では、走行中の車線の幅方向の中心からの横ずれ量、及び操舵トルクの一方、又は両方が予め定められたしきい値を超えたか否かを判断して、当該しきい値を超えたときに車線が変更されると判断する車線変更判断処理をする。そして、車線が変更されないと判断したときには、従来技術では、走行している車線の中心に沿って車両を走行させるように通常の強さの操舵トルクを発生させて車線維持制御をする。一方、従来技術では、車線の区画線を横切って車線が変更されると判断したときには、さらに、横切ろうとしている区画線が実線である車道変更か、横切ろうとしている車線の区画線が破線である車線変更かを、車両の走行方向を撮像した画像を処理した結果に基づいて判断する変更種類判断処理を開始する。

【０００４】

ここで、実線の区画線は、例えば、白色の実線で車道と歩道とを区分するために用いられ、破線の区画線は、例えば、白色の破線で片側２車線、或いは片側３車線などの道路の車線を区分するために用いられる。したがって、実線の区画線を横切ろうとするときは、例えば、車道から歩道へ車道を逸脱するとき、すなわち、歩行者との接触事故を発生させる可能性が相対的に高い上述した車道変更と考えることができる。一方、破線の区画線を横切ろうとするときは、例えば、ある車線から隣接する車線へ走行中の車線を変更する通常の上述した車線変更と考えることができる。尚、車道変更は、上述したように、歩行者との接触事故を発生させる可能性が相対的に高い場合があるため、運転者にとっては重要度の高い車線の変更であると考えることができる。

【０００５】

そこで、従来技術では、変更種類判断処理を開始して実線の区画線を横切ろうとしていると判断したときは、運転者に注意を促す必要のある重要度の高い車道変更をしていると判断して、通常よりも高い操舵トルクを、車線の中心に沿って車両を走行させるように、

Request for Participation in the Patent Prosecution Highway Program
U.S. Patent Application No. 12/620,717
Attorney's Docket No: 350951US71

APPENDIX C

English-language translation of JPO Office Action including Statement regarding Accuracy of English-language translation

CERTIFICATION

I, Sanae Nakagawa, of TOYOTA TECHNICAL DEVELOPMENT CORP., 1-21, Imae, Hanamoto-cho, Toyota, Aichi, 470-0334 Japan, hereby certify that I am the translator of the accompanying certified copy of the official communications received from the Japan Patent Office in the patent application identified below, and certify that the following is a true and correct translation to the best of my knowledge and belief.

Application Number	Date of Filing
Japanese Patent Application No. 2008-303888.	November 28, 2008

Sanae Nakagawa

Sanae Nakagawa

Signed this 20th day of June, 2011

Notification of Reasons for Refusal

Patent Application Number: Patent Application No. 2008-303888
Drafting date: November 26, 2010
Examiner of Patent Office: Norio Nakamura 9148 3H00
Representative for Patent Applicant: Shiro Ogasawara (and another)
Applied Text of Patent Law: Section 29 (1), Section 29 (2), Section 36, Section 37

The subject application is rejected for the reason described below. If you have an opinion about this rejection, please submit a remark within 60 days from the date at which this notification was sent.

REASONS

[1] The subject application does not satisfy the requirements defined in Patent Law Section 37 as described below.

As described in the following [2], the invention in claim 1 of the subject application does not include any special technical feature that is significant over the prior art, and thus no identical or corresponding special technical feature is found between the invention in claim 1 and the inventions in claims 2 to 16 of the subject application. However, exceptionally, whether the inventions in claims 2 to 10 and 16 satisfy the requirements regarding unity of invention is not determined, based on the Examination Standards (refer to First Part, Second Chapter, 4.2). As described above, the invention in claim 1 and the inventions in claims 11 to 15 are not regarded as belonging to one group that satisfies the requirements regarding unity of invention. Thus, the subject application does not satisfy the requirements defined in Patent Law Section 37. Note that it has not been examined whether the inventions in claims other than claims 1 to 10 and 16 satisfy the requirements other than the requirements defined in Patent Law Section 37.

[2] The invention in the claims listed below of the subject application should not be granted a patent under the provision of Patent Law Section 29 (1-3) since it is the invention described in the publications listed below which were distributed in Japan or foreign countries prior to the filing of the subject application, or the invention which was made available to the public through an electrical communication line prior to the

filing of the subject application.

NOTE

<Claims 1 and 16>
The cited document 1 WO2008/113637 (Published Japanese Translation of PCT Application No. 2010-500678)

Remark:
The cited document 1 (refer to paragraph 0018, etc.) describes a demarcation line recognition apparatus that changes the time at which to start the operation of an assistance device provided in a vehicle when the lane in which the vehicle is traveling is of a predetermined lane type (e.g., a passing lane).

[3] The invention in the claims listed below of the subject application should not be granted a patent under the provision of Patent Law Section 29 (2) since it could have easily been made by persons who have common knowledge in the technical field to which the invention pertains, on the basis of the inventions described in the publications listed below which were distributed in Japan or foreign countries prior to the filing of the subject application, or the inventions which were made available to the public through an electrical communication line prior to the filing of the subject application.

<Claims 1 to 10, and 16>
1. WO2008/113637 (Published Japanese Translation of PCT Application No. 2010-500678)
2. Japanese Patent Application Publication No. 2008-123348

NOTE

Remark:
The cited document 1 (refer to paragraph 0018, etc.) describes a demarcation line recognition apparatus that changes the time at which to start the operation of an assistance device provided in a vehicle when the lane in which the vehicle is traveling is of a predetermined lane type (e.g., a passing lane).
The cited document 2 describes recognizing car pool lanes in lane type recognition. According to the cited document 2, in the lane type recognition, a car pool lane can be

recognized by, for example, comparing the number of the left side demarcation lines drawn on a road surface and the number of the right side demarcation lines drawn on the road surface with each other.

With regard to claims 4 to 7 of the subject application, it is to be noted that determining in which section of an image such a comparison between the number of the left side demarcation lines drawn on a road surface and the number of the right side demarcation lines drawn on the road surface should be made is merely a design matter.

[4] The claims of the subject application do not satisfy the requirements defined in Patent Law Section 36 (6-1) as described below.

NOTE

<Claim 7>

It is unclear where the matter corresponding to the description "when the number of lane markers in the far region of each of the left region and the right region is determined to be one or more, and a difference obtained by subtracting the number of lane markers in the far region of the left region from the number of lane markers in the far region of the right region is two or more." is described in the detailed description of the invention.

<Suggestion regarding amendment>

It has been found that the invention in claim 2 that cites claim 1 has special technical features.

Accordingly, when making amendment, please think of making amendment so that the inventions in amended claims are inventions that include all the inventive features of the invention in claim 2 that cites claim 1, and that belong to the same category, in order not to violate the requirements defined in Patent Law Section 17 (2-4) (refer to "Examination Standards for Patent and Utility Model" Part III, Section II, 4. 3. 1)

Record of the result of prior art search

- Searched technical field(s)

IPC G08G 1/16

B60R 21/00

This record is not a component(s) of the reason(s) for refusal.

If you have any question about this notification of reasons for refusal, please contact the following:

Second Patent Examination Department Automatic Control Norio Nakamura
Phone: 03-3581-1101 Extension 3314
FAX: 03-3501-0671

Director/Deputy	Chief Examiner/Deputy	Examiner	Assistant Examiner
	Tetsu Murakami 9039	Norio Nakamura 9148	

Request for Participation in the Patent Prosecution Highway Program
U.S. Patent Application No. 12/620,717
Attorney's Docket No: 350951US71

APPENDIX D

English-language translation of copy of claims determined patentable by the JPO including Statement regarding Accuracy of English-language translation

IN THE UNITED STATES PATENT AND TRADEMARK OFFICE

In re Patent Application of
Inventors: Shioya Kageyama, Tomoyasu Tamaoki
Application No. 12/620,717
Title: On-board Apparatus and Method Used by Said Apparatus

VERIFIED TRANSLATION OF CLAIMS OF JAPANESE PATENT APPLICATION

The undersigned, of the below address, hereby certifies that he/she well knows both the English and Japanese languages, and that the attached is an accurate translation of claim 1 to 16 in Japanese Patent No. 4692613.

Signed this 20th day of June, 2011

Signature: Sanae Nakagawa
Name: Sanae Nakagawa
Address: c/o TOYOTA TECHNICAL DEVELOPMENT CORP., 1-21, Imae, Hanamoto-cho, Toyota, Aichi, 470-0334 Japan

1. A lane marker recognition apparatus which recognizes a lane marker based on a captured image of the direction in which a vehicle is traveling, characterized by comprising:

lane identifying means for identifying the type of lane that the vehicle is traveling in based on the image; and

timing changing means for providing a change command to change the start timing of an operation of an assist system provided in the vehicle to the assist system when the type of lane identified by the lane identifying means is a predetermined type of lane, wherein

the lane identifying means includes:

lane marker counting means for determining the number of lane markers captured in a predetermined left region in the image and the number of lane markers captured in a predetermined right region in the image, based on the image, and further, determining the number of lane markers captured in a predetermined region as a far region in which an area far from the vehicle in the direction in which the vehicle is traveling is captured, and the number of lane markers captured in a predetermined region as a near region in which an area near the vehicle in the direction in which the vehicle is traveling is captured, in each of the left region and the right region, based on the image; and

carpool identifying means for identifying whether the type of lane is a carpool lane, based on the number of lane markers captured in the right region and the number of lane markers captured in the left region, in the near region and the far region, and

the timing changing means provides the change command when the type of lane identified by the lane identifying means is the carpool lane.

2. The lane marker recognition apparatus according to claim 1, wherein the carpool identifying means identifies the type of lane as the carpool lane when the number of lane markers captured in the right region counted by the lane marker counting means is equal to or greater than the number of lane markers captured in the left region.

3. The lane marker recognition apparatus according to claim 1, the carpool identifying means identifies the type of lane as the carpool lane when the

number of lane markers captured in the right region is equal to or greater than the number of lane markers captured in the left region in at least one of the near region and the far region.

4. The lane marker recognition apparatus according to claim 3, wherein the carpool lane identifying means identifies the type of lane as the carpool lane when the number of lane markers in each of the near region and the far region in each of the left region and the right region is determined to be one or more by the lane marker counting means, the number of lane markers in the near region of the right region is equal to or greater than the number of lane markers in the near region of the left region, and the number of lane markers in the far region of the right region is equal to or greater than the number of lane markers in the near region of the left region.

5. The lane marker recognition apparatus according to claim 3, wherein the carpool lane identifying means identifies the type of lane as the carpool lane when the number of lane markers in the near region of each of the left region and the right region is determined to be one or more by the lane marker counting means, and a difference obtained by subtracting the number of lane markers in the near region of the left region from the number of lane markers in the near region of the right region is two or more.

6. The lane marker recognition apparatus according to claim 3, wherein the carpool lane identifying means identifies the type of lane as the carpool lane when the number of lane markers in the far region of each of the left region and the right region is determined to be one or more by the lane marker counting means, and a difference obtained by subtracting the number of lane markers in the far region of the left region from the number of lane markers in the far region of the right region is two or more.

7. The lane marker recognition apparatus according to claim 1, wherein the timing changing means provides the change command to a preventive safety device provided in the vehicle as the assist system.

8. The lane marker recognition apparatus according to claim 1, wherein the timing changing means provides the change command to a lane departure warning device provided in the vehicle as the assist system.

9. The lane marker recognition apparatus according to claim 1, wherein the

timing changing means provides the change command to advance the start timing to the assist system.

10. A preventive safety system that includes the lane marker recognition apparatus according to any one of claims 1 to 9, and a preventive safety device for increasing safety when the vehicle collides with an object, wherein

the preventive safety device comprises:

obtaining means for obtaining the change command;

a detecting portion that detects the relative distance and relative speed between the vehicle and the object;

calculating means for calculating the time to collision between the vehicle and the object based on the relative distance and relative speed between the vehicle and the object detected by the detecting portion;

operating means for starting an operation to increase safety when the time calculated by the calculating means is equal to or less than a predetermined threshold value; and

resetting means for resetting the threshold value to a larger value when the obtaining means obtains the change command.

11. The preventive safety system according to claim 10, wherein the operating means starts an operation to issue a warning to a driver of the vehicle when the time calculated by the calculating means is equal to or less than the threshold value that has been reset by the resetting means.

12. The preventive safety system according to claim 11, wherein the operating means starts to operate a brake of the vehicle when the time calculated by the calculating means is equal to or less than the threshold value that has been reset by the resetting means.

13. The preventive safety system according to claim 11, wherein the operating means starts an operation to retract a seatbelt worn by an occupant of the vehicle when the time calculated by the calculating means is equal to or less than the threshold value that has been reset by the resetting means.

14. A lane departure warning system that includes the lane marker recognition apparatus according to any one of claims 1 to 9, and a lane departure warning device

that warns that there is a possibility that the vehicle will veer out of a lane that the vehicle is traveling in, when the lane departure warning device determines that there is the possibility that the vehicle will veer out of the lane, wherein

the lane departure warning device comprises:

second obtaining means for obtaining road information indicative of the lane width of the lane that the vehicle is traveling in, which is detected based on the image, and the offset from the center of the lane to the center in the width direction of the vehicle, which is detected based on the image;

first calculating means for calculating the width from the center of the lane that the vehicle is traveling in to one of left and right lane markers based on the lane width indicated by the road information;

second calculating means for calculating a difference by subtracting a predetermined threshold value from the width calculated by the first calculating means;

third calculating means for calculating the sum of the offset indicated by the road information and the greatest width from the center in the width direction of the vehicle to one of left and right sides of the vehicle;

operating means for starting an operation to issue an alarm to a driver of the vehicle when the sum calculated by the third calculating means becomes equal to or greater than the difference calculated by the second calculating means; and

resetting means for resetting the threshold value to a larger value when the first obtaining means obtains the change command.

15. A lane keeping system that includes the lane marker recognition apparatus according to any one of claims 1 to 9, and a lane keeping device that performs control so that the vehicle constantly travels along the center in the width direction of a lane, wherein

the lane keeping device comprises:

second obtaining means for obtaining road information indicative of the lane width of the lane that the vehicle is traveling in, which is detected based on the image, and the offset from the center of the lane to the center in the width direction of the vehicle, which is detected based on the image; and

steering means for performing control so that the vehicle constantly travels along the center in the width direction of the lane that the vehicle is traveling in, by generating steering torque for steering steered wheels of the vehicle so that the offset becomes zero, when the road information has been obtained.

16. A lane marker recognition method executed by a lane marker recognition apparatus which recognizes a lane marker based on a captured image of the direction in which a vehicle is traveling, characterized by comprising:

a lane identifying step of identifying the type of lane that the vehicle is traveling in based on the image; and

a timing changing step of providing a change command to change the start timing of an operation of an assist system provided in the vehicle to the assist system based on the type of lane identified by the lane identifying step, wherein

the lane identifying step includes:

a lane marker counting step of determining the number of lane markers captured in a predetermined left region in the image and the number of lane markers captured in a predetermined right region in the image, based on the image, and further, determining the number of lane markers captured in a predetermined region as a far region in which an area far from the vehicle in the direction in which the vehicle is traveling is captured, and the number of lane markers captured in a predetermined region as a near region in which an area near the vehicle in the direction in which the vehicle is traveling is captured, in each of the left region and the right region, based on the image; and

a carpool identifying step of identifying whether the type of lane is a carpool lane, based on the number of lane markers captured in the right region and the number of lane markers captured in the left region, in the near region and the far region, and

in the timing changing step, the change command is provided when the type of lane identified by the lane identifying step is the carpool lane.

UNITED STATES PATENT AND TRADEMARK OFFICE

UNITED STATES DEPARTMENT OF COMMERCE
United States Patent and Trademark Office
Address: COMMISSIONER FOR PATENTS
P.O. Box 1450
Alexandria, Virginia 22313-1450
www.uspto.gov

APPLICATION NO.	FILING DATE	FIRST NAMED INVENTOR	ATTORNEY DOCKET NO.	CONFIRMATION NO.
12/620,717	11/18/2009	Shioya KAGEYAMA	350951US26	1102

22850 7590 09/29/2011

OBLON, SPIVAK, MCCLELLAND MAIER & NEUSTADT, L.L.P.
1940 DUKE STREET
ALEXANDRIA, VA 22314

EXAMINER	
CAMBY, RICHARD M	
ART UNIT	**PAPER NUMBER**
3661	

NOTIFICATION DATE	DELIVERY MODE
09/29/2011	ELECTRONIC

Please find below and/or attached an Office communication concerning this application or proceeding.

The time period for reply, if any, is set in the attached communication.

Notice of the Office communication was sent electronically on above-indicated "Notification Date" to the following e-mail address(es):

patentdocket@oblon.com
oblonpat@oblon.com
jgardner@oblon.com

UNITED STATES PATENT AND TRADEMARK OFFICE

Commissioner for Patents
United States Patent and Trademark Office
P.O. Box 1450
Alexandria, VA 22313-1450
www.uspto.gov

SEP 28 2011

OBLON, SPIVAK, MCCLELLAND
MAIER & NEUSTADT, L.L.P.
1940 DUKE STREET
ALEXANDRIA VA 22314

In re application of
Kageyyama et al.
Application No. 12/620,717
Filed: July 20, 2011
For: ON-BOARD APPARATUS AND METHOD USED BY SAID APPARATUS

: **DECISION ON REQUEST TO**
: **PARTICIPATE IN PATENT**
: **PROSECUTION HIGHWAY**
: **PROGRAM AND PETITION**
: **TO MAKE SPECIAL UNDER**
: **37 CFR 1.102(a)**

This is a decision on the request to participate in the Patent Prosecution Highway (PPH) program and the petition under 37 CFR 1.102(a), filed July 20, 2011, to make the above-identified application special.

The request and petition are **GRANTED**.

A grantable request to participate in the PPH program and petition to make special require:

(1) The U.S. application must validly claim priority under 35 U.S.C. 119(a) to one or more applications filed in the JPO;
(2) Applicant must submit a copy of the allowable/patentable claim(s) from the JPO application(s) along with an English translation thereof and a statement that the English translation is accurate;
(3) All the claims in the U.S. application must sufficiently correspond or be amended to sufficiently correspond to the allowable/patentable claim(s) in the JPO application(s);
(4) Examination of the U.S. application has not begun;
(5) Applicant must submit a copy of the latest Office action from each of the JPO application(s) containing the allowable/patentable claim(s) along with an English translation thereof and a statement that the English translation is accurate;
(6) Applicant must submit an IDS listing the documents cited by the JPO examiner in the JPO Office action along with copies of documents except U.S. patents or U.S. patent application publications.

In light of the preliminary amendment filed on July 20, 2011. The request to participate in the PPH pilot program complies with the above requirements. Therefore, the above-identified application has been accorded "special" status.

All other inquiries concerning the examination or status of the application should be directed to the Patent Application Information Retrieval (PAIR) system.

The application is being forwarded to the examiner for action on the merits commensurate with this decision.

Any inquiry regarding this decision should be directed to Mikado Buiz, Quality Assurance Specialist, at (571) 272-6578.

/ Mikado Buiz /

Mikado Buiz,
Quality Assurance Specialist
Technology Center 3600

MB/MB: 09/27/11

UNITED STATES PATENT AND TRADEMARK OFFICE

Commissioner for Patents
United States Patent and Trademark Office
P.O. Box 1450
Alexandria, VA 22313-1450
www.uspto.gov

KELLY LOWRY & KELLEY, LLP
6320 CANOGA AVENUE
SUITE 1650
WOODLAND HILLS CA 91367

MAILED

SEP 21 2010

OFFICE OF PETITIONS

In re Application of	:	
Seber et al.	:	
Application No. 12/620,753	:	ON PETITION
Filed: November 18, 2009	:	
Attorney Docket No. SEBERD-52522	:	

This is a decision on the petition under 37 C.F.R. § 1.137(b), filed September 1, 2010, to revive the above-identified application.

The petition is **GRANTED**.

The petition satisfies the requirements of 37 CFR 1.137(b) in that petitioner has supplied (1) the reply in the form of an Oath/Declaration and $65.00 late surcharge, (2) the petition fee of $810.00, and (3) a proper statement of unintentional delay.

As the Power of Attorney was only recently given to the petitioner, it is not apparent whether the statement of unintentional delay was signed by a person who would have been in a position of knowing that the entire delay in filing the required reply from the due date for the reply until the filing of a grantable petition pursuant to 37 CFR 1.137(b) was unintentional. Nevertheless, in accordance with 37 CFR 10.18, the statement is accepted as constituting a certification of unintentional delay. However, in the event that petitioner has no knowledge that the delay was unintentional, petitioner must make such an inquiry to ascertain that, in fact, the delay was unintentional. If petitioner discovers that the delay was intentional, petitioner must notify the Office.

Telephone inquiries concerning this decision should be directed to the undersigned at (571) 272-3206.

This matter is being referred to the Office of Patent Application Processing for further pre-examination processing. Thereafter, the application will be referred to Technology Center AU 3723 for examination on the merits.

Liana Walsh
Petitions Examiner
Office of Petitions

UNITED STATES PATENT AND TRADEMARK OFFICE

Commissioner for Patents
United States Patent and Trademark Office
P.O. Box 1450
Alexandria, VA 22313-1450
www.uspto.gov

NADEJDA REINGAND
7 CLIFTON CT.
BALTIMORE MD 21208

MAILED

MAY 09 2011

OFFICE OF PETITIONS

In re Application of	:	
Alexey Kovsh et al.	:	
Application No. 12/620,817	:	DECISION ON PETITION
Filed: November 18, 2009	:	TO WITHDRAW
Attorney Docket No. NSC-25DIV	:	FROM RECORD
	:	

This is a decision on the Request to Withdraw as attorney or agent of record under 37 C.F.R. § 1.36(b), filed April 15, 2011.

The request is **NOT APPROVED.**

The Office will no longer accept address changes to a new practitioner or law firm filed with a Request, absent the filing of a power of attorney to the new representative. The Office will either change the correspondence address of record to the most current address information provided for the assignee of the entire interest who properly became of record under 37 CFR 3.71 or, if no assignee of the entire interest has properly been made of record under 37 CFR 3.71, the most current address information provided for the first named inventor.

Accordingly, the request to withdraw from record cannot be approved because no proper forwarding address was provided. The request to change the correspondence address should be that of the: (1) the first named inventor; or (2) an assignee of the entire interest under 37 C.F.R 3.71. If an assignee has intervened in this application then a Statement under 37 CFR 3.73(b), or a copy of the actual assignment must be submitted with a renewed request. The most current address of the inventor/assignee is needed.

All future communications from the Office will continue to be directed to the above-identified address until otherwise properly notified.

Telephone inquiries concerning this decision should be directed to the undersigned at 571-272- 4618.

/Kimberly Inabinet/

Kimberly Inabinet
Petitions Examiner
Office of Petitions

UNITED STATES PATENT AND TRADEMARK OFFICE

Commissioner for Patents
United States Patent and Trademark Office
P.O. Box 1450
Alexandria, VA 22313-1450
www.uspto.gov

VERTEX PHARMACEUTICALS INC
SUSAN BATTY-GUNN
130 WAVERLY STREET
CAMBRIDGE, MA 02139-4242

MAILED
AUG 12 2011
OFFICE OF PETITIONS

In re Application of :
David Lauffer, et al. :
Application No. 12/620,845 : DECISION ON PETITION
Filed: November 18, 2009 : UNDER 37 CFR 1.313(c)(1)
Attorney Docket No. VPI/08-143 US :

This is a decision on the petition under 37 CFR 1.313(c), filed August 11, 2011, to withdraw the above-identified application from issue after payment of the issue fee.

The petition is **DISMISSED**.

37 CFR 1.313(c) provides that:

Once the issue fee has been paid, the application will not be withdrawn from issue upon petition by the applicant for any reason except:

(1) Unpatentability of one of more claims, which petition must be accompanied by an unequivocal statement that one or more claims are unpatentable, an amendment to such claim or claims, and an explanation as to how the amendment causes such claim or claims to be patentable;

(2) Consideration of a request for continued examination in compliance with 37 CFR 1.114; or

(3) Express abandonment of the application. Such express abandonment may be in favor of a continuing application.

Upon payment of the issue fee, an application will not be withdrawn from issue upon petition except for the reasons enumerated in 37 CFR 1.313(c). The circumstances of the above-identified application do not fall within any of those exceptions.

For the reason stated above, the petition under 37 CFR 1.313(c) cannot be granted.

Petitioner is reminded that the filing of any renewed petition to withdraw from issue may not be recognized or effective if not received by the appropriate deciding official in time to act prior to issuance. *Note* 37 CFR 1.313(d). It is recommended that the facsimile number listed below be used to file the renewed petition.

Further correspondence with respect to this matter should be addressed as follows:

By mail: Mail Stop PETITIONS
Commissioner for Patents
Post Office Box 1450
Alexandria, VA 22313-1450

By hand: Customer Service Window
Mail Stop Petitions
Randolph Building
401 Dulany Street
Alexandria, VA 22314

By fax: **(571) 273-0025**
Office of Petitions

Telephone inquiries concerning this matter may be directed to undersigned at (571) 272-1642.

/AMW/
April M. Wise
Petitions Examiner
Office of Petitions

UNITED STATES PATENT AND TRADEMARK OFFICE

Commissioner for Patents
United States Patent and Trademark Office
P.O. Box 1450
Alexandria, VA 22313-1450
www.uspto.gov

VERTEX PHARMACEUTICALS INC
SUSAN BATTY-GUNN
130 WAVERLY STREET
CAMBRIDGE, MA 02139-4242

MAILED

AUG 15 2011

OFFICE OF PETITIONS

In re Application of	:	
David Lauffer, et al.	:	
Application No. 12/620,845	:	DECISION GRANTING PETITION
Filed: November 18, 2009	:	UNDER 37 CFR 1.313(c)(2)
Attorney Docket No. VPI/08-143 US	:	

This is a decision on the renewed petition under 37 CFR 1.313(c)(2), filed August 15, 2011, to withdraw the above-identified application from issue after payment of the issue fee.

The petition is **GRANTED**.

The above-identified application is withdrawn from issue for consideration of a submission under 37 CFR 1.114 (request for continued examination). *See* 37 CFR 1.313(c)(2).

Petitioner is advised that the issue fee paid on July 12, 2011 cannot be refunded. If, however, this application is again allowed, petitioner may request that it be applied towards the issue fee required by the new Notice of Allowance.[1]

Telephone inquiries regarding this decision should be directed to undersigned at (571) 272-1642. All other inquiries concerning the examination or status of this application should be directed to the Technology Center.

This application is being referred to Technology Center AU 1625 for processing of the request for continued examination under 37 CFR 1.114 and for consideration of the concurrently filed information disclosure statement.

/AMW/
April M. Wise
Petitions Examiner
Office of Petitions

[1] *The request to apply the issue fee to the new Notice may be satisfied by completing and returning the new Part B – Fee(s) Transmittal Form (along with any balance due at the time of submission). Petitioner is advised that the Issue Fee Transmittal Form must be completed and timely submitted to avoid abandonment of the application.*

UNITED STATES PATENT AND TRADEMARK OFFICE

Commissioner for Patents
United States Patent and Trademark Office
P.O. Box 1450
Alexandria, VA 22313-1450
www.uspto.go

RIM/FINNEGAN
901 NEW YORK AVENUE NW
WASHINGTON, DC 20001

MAILED

DEC 14 2010

OFFICE OF PETITIONS

Applicant: Vadim Fux, et al.
Appl. No.: 12/620,888
Filing Date: November 18, 2009
Title: HANDHELD ELECTRONIC DEVICE WITH TEXT DISAMBIGUATION
Attorney Docket: 11298.0043-02
Pub. No.: US 2010/0073299 A1
Pub. Date: March 25, 2010

This is a decision on the request for a corrected patent application publication under 37 CFR 1.221(b), received on April 9, 2010, for the above-identified application.

The request is DISMISSED.

Applicant requests that the application be republished because the patent application publication contains material errors wherein the preliminary amendment filed with the application on November 18, 2009 was not included in the publication.

37 CFR 1.221 (b) is applicable "only when the Office makes a material mistake which is apparent from Office records.... Any request for a corrected publication or revised patent application publication other than provided as provided in paragraph (a) of this section must be filed within two months from the date of the patent application publication. This period is not extendable." A material mistake must affect the public's ability to appreciate the technical disclosure of the patent application publication, to determine the scope of the patent application publication, or to determine the scope of the provisional rights that an applicant may seek to enforce upon issuance of a patent. [1]

The error noted by requestor with respect to the preliminary amendment is not an Office error. The patent application publication does not include a mistake regarding the failure to include the preliminary amendment to the specification because patent application publications are not required to include preliminary amendments. See 37 CFR 1.215(a). The "failure to include an amendment is not an Office error." See MPEP 1130(b). The publication accurately reflected the specification as filed.

[1] Changes to Implement Eighteen-Month Publication of Patent Applications, 65 FR 57023, 57038 (Sept. 20, 2000), 1239, Off. Gaz. Pat. Office Notices 63, 75 (Oct. 10, 2000) (final rule).

Since 1997, the Office has encouraged applicants to file patent applications under 35 U.S.C. 111(a), especially continuation and divisional applications, without preliminary amendments by including any desired changes as part of the specification and drawings of the new application. In order to have a patent application publication of a continuation or divisional application contain only a desired set of claims, rather than the set of claims in the prior application, the Office strongly recommended that the continuation or divisional application be filed under 37 CFR 1.53(b) with a new specification containing only the desired set of claims.

On December 11, 2009, a Filing Receipt was mailed by the Office, which improperly listed the benefit claim. To avoid this type of problem in the future, applicant's representative should make a request for a corrected filing receipt prior to export of the application to the publisher and publication of the application.

The applicant is advised that a "request for republication of an application previously published" may be filed under 37 CFR 1.221 (a). Such a request for republication "must include a copy of the application compliance with the Office's electronic filing system requirements and be accompanied by the publication fee set forth in § 1.18 (d) and the processing fee set forth in § 1.17 (i)." If the request for republication does not comply with the electronic filing system requirements, the republication will not take place and the publication fee set forth in § 1.18 (d) will be refunded. The processing fee will be retained.

A guide for filing a request for a Pre-Grant Publication, such as a request for republication, may be found on the link below:

http://www.uspto.gov/patents/process/file/efs/guidance/index.jsp

http://www.uspto.gov/ebc/portal/efs/pgpub_quickstart.pdf

Any request for republication under 37 CFR 1.221(a), must be submitted via the EFS system, as a "Pre-Grant Publication".

Inquiries relating to this matter may be directed to Mark Polutta at (571) 272-7709.

M. O. Polutta

Mark Polutta
Senior Legal Advisor
Office of Patent Legal Administration
Office of the Deputy Commissioner
for Patent Examination Policy

UNITED STATES PATENT AND TRADEMARK OFFICE

Commissioner for Patents
United States Patent and Trademark Office
P.O. Box 1450
Alexandria, VA 22313-1450
www.uspto.gov

WELSH & FLAXMAN LLC
2000 DUKE STREET, SUITE 100
ALEXANDRIA VA 22314

MAILED

SEP 2 9 2010

OFFICE OF PETITIONS

In re Application of :
Elefteriades et al. :
Application No. 12/621,034 : ON PETITION
Filed: November 18, 2009 :
Attorney Docket No. YALE-014 :

This is a decision on the petition, filed August 19, 2010, which is being treated as a petition under 37 CFR 1.181, requesting withdrawal of the holding of abandonment in the above-identified application.

The petition is **GRANTED**.

This application was held abandoned for failure to properly respond to the Notice to File Missing Parts of Nonprovisional Application (Notice), mailed December 4, 2009, which set a two (2) month shortened statutory period for reply. Accordingly, a reply was due on or before February 4, 2010. A Notice of Abandonment was mailed August 16, 2010.

Petitioner states that a timely reply was electronically submitted on June 29, 2010, which included the following papers: 1) Applicant Response to Pre-Exam Formalities Notice, 2) Oath/Declaration, 3) Extension of Time and 4). Petitioner has submitted a copy of the USPTO Acknowledgement Receipt, which confirms receipt of the above-listed items on June 29, 2010, along with a copy of the File Wrapper printout obtained from the PAIR system.

As the above-response was filed with a five (5) month extension of time, the reply was timely filed. A review of the application confirms timely receipt of the drawings referenced as missing on the Notice of Abandonment.

Accordingly, the holding of abandonment is hereby withdrawn and the application restored to pending status.

This matter is being referred to the Office of Patent Application Processing for further pre-examination processing.

Liana Walsh
Petitions Examiner
Office of Petitions

UNITED STATES PATENT AND TRADEMARK OFFICE

Commissioner for Patents
United States Patent and Trademark Office
P.O. Box 1450
Alexandria, VA 22313-1450
www.uspto.gov

POLSTER, LIEDER, WOODRUFF & LUCCHESI, L.C.
12412 POWERSCOURT DR. SUITE 200
ST. LOUIS MO 63131-3615

MAILED

NOV 21 2011

OFFICE OF PETITIONS

In re Application of	:	
SIMMONS	:	
Application No. 12/621,097	:	DECISION ON PETITION
Filed: November 18, 2009	:	TO WITHDRAW
Attorney Docket No. SIGW D500US	:	FROM RECORD
	:	

This is a decision on the Request to Withdraw as attorney or agent of record under 37 C.F.R. § 1.36(b), filed October 26, 2011.

The request is **APPROVED**.

A grantable request to withdraw as attorney/agent of record must be signed by every attorney/agent seeking to withdraw or contain a clear indication that one attorney is signing on behalf of another/others. The Office requires the practitioner(s) requesting withdrawal to certify that he, she, or they have: (1) given reasonable notice to the client, prior to the expiration of the response period, that the practitioner(s) intends to withdraw from employment; (2) delivered to the client or a duly authorized representative of the client all papers and property (including funds) to which the client is entitled; and (3) notified the client of any responses that may be due and the time frame within which the client must respond, pursuant 37 CFR 10.40(c).

The request was signed by J. Joseph Muller on behalf of the attorneys of record associated with Customer No. 001688

The attorneys of record associated with Customer No. 001688 have been withdrawn.

Applicant is reminded that there is no attorney of record at this time.

The correspondence address of record has been changed and the new correspondence address is the address indicated below until otherwise properly notified.

Telephone inquiries concerning this decision should be directed to the undersigned at (571) 272-6735.

/Diane Goodwyn/
Diane Goodwyn
Petitions Examiner
Office of Petitions

cc: GWENDOLYN SIMMONS
2242 NEW SUN DRIVE
FLORISSANT MO 63031

UNITED STATES PATENT AND TRADEMARK OFFICE

UNITED STATES DEPARTMENT OF COMMERCE
United States Patent and Trademark Office
Address: COMMISSIONER FOR PATENTS
P.O. Box 1450
Alexandria, Virginia 22313-1450
www.uspto.gov

APPLICATION NUMBER	FILING OR 371(C) DATE	FIRST NAMED APPLICANT	ATTY. DOCKET NO./TITLE
12/621,097	11/18/2009	Gwendolyn Simmons	SIGW D500US

CONFIRMATION NO. 1814

1688
Polster, Lieder, Woodruff & Lucchesi, L.C.
12412 Powerscourt Dr. Suite 200
St. Louis, MO 63131-3615

POWER OF ATTORNEY NOTICE

OC000000051013781

Date Mailed: 11/17/2011

NOTICE REGARDING CHANGE OF POWER OF ATTORNEY

This is in response to the Power of Attorney filed 10/26/2011.

- The withdrawal as attorney in this application has been accepted. Future correspondence will be mailed to the new address of record. 37 CFR 1.33.

/dcgoodwyn/

Office of Data Management, Application Assistance Unit (571) 272-4000, or (571) 272-4200, or 1-888-786-0101

Doc Code: PET.GREEN
Document Description: Petition for Green Tech Pilot

PTO/SB/420 (03-11)

PETITION TO MAKE SPECIAL UNDER THE GREEN TECHNOLOGY PILOT PROGRAM

Attorney Docket Number: DEV3-PT001	Application Number (if known): 12/621,191	Filing date: November 18, 2009

First Named Inventor: Andrew J. Devitt

Title: GEARLESS VERTICAL AXIS WIND TURBINE WITH BEARING SUPPORT AND POWER GENERATION AT PERIMETER

APPLICANT HEREBY REQUESTS TO PARTICIPATE IN THE GREEN TECHNOLOGY PILOT PROGRAM FOR THE ABOVE-IDENTIFIED APPLICATION. See Instruction Sheet on page 2.

This petition must be timely filed electronically using the USPTO electronic filing system, EFS-Web.

1. By filing this petition:

   Applicant is requesting early publication: Applicant hereby requests early publication under 37 CFR 1.219 and the publication fee set forth in 37 CFR 1.18(d) accompanies this request.

2. By filing this petition: applicant is agreeing to make an election without traverse in a telephonic interview and elect an invention that meets the eligibility requirements for the Green Technology Pilot Program, if the Office determines that the claims are not obviously directed to a single invention. See Instruction Sheet.

3. This request is accompanied by statements of special status for the eligibility requirement.

4. The application contains no more than three (3) independent claims and twenty (20) total claims.

5. The application does not contain any multiple dependent claims.

6. Other attachments: Statement Concerning the Basis for the Special Status

Signature /Wesley T. McMichael/	Date November 7, 2011
Name (Print/Typed) Wesley T. McMichael	Registration Number 56,982

Note: *Signatures of all the inventors or assignees of record of the entire interest or their representative(s) are required in accordance with 37 CFR 1.33 and 11.18. Please see 37 CFR 1.4(d) for the form of the signature. If necessary, submit multiple forms for more than one signature, see below*.*

☐ *Total of _____ forms are submitted.

If you need assistance in completing the form, call 1-800-PTO-9199 and select option 2.

Instruction Sheet for
Petition to Make Special Under the Green Technology Pilot Program

(Not to be Submitted to the USPTO)

The following is a summary of the requirements (for more information see the notices (i) "Pilot Program for Green Technologies Including Greenhouse Gas Reduction," (ii) "Elimination of Classification Requirement in the Green Technology Pilot Program," and (iii) "Expansion and Extension of the Green Technology Pilot Program," available on the USPTO web site at http://www.uspto.gov/patents/init_events/green_tech.jsp):

(1) The application must be a non-reissue, non-provisional utility application filed under 35 U.S.C. 111(a), or an international application that has entered the national stage in compliance with 35 U.S.C. 371, irrespective of the filing date of the application. Reexamination proceedings are excluded from this pilot program.

(2) The application must contain three or fewer independent claims and twenty or fewer total claims. The application must not contain any multiple dependent claims. For an application that contains more than three independent claims or twenty total claims, or multiple dependent claims, applicant must file a preliminary amendment in compliance with 37 CFR 1.121 to cancel the excess claims and/or the multiple dependent claims at the time the petition to make special is filed.

(3) The claims must be directed to a single invention that materially enhances the quality of the environment, or that materially contributes to: (1) the discovery or development of renewable energy resources; (2) the more efficient utilization and conservation of energy resources; or (3) green house gas emission reduction (see the eligibility requirements of sections II and III of the notice (i) cited above). The petition must include a statement that, if the USPTO determines that the claims are directed to multiple inventions (e.g., in a restriction requirement), applicant will agree to make an election without traverse in a telephonic interview, and elect an invention that meets the eligibility requirements in section II or III of the notice (i) cited above.

(4) The petition to make special must be timely filed electronically using the USPTO electronic filing system, EFS-Web, and selecting the document description of "Petition for Green Tech Pilot" on the EFS-Web screen. Applicant should use form PTO/SB/420, which is available as a Portable Document Format (PDF) fillable form in EFS-Web and on the USPTO Web site.

(5) The petition to make special must be filed at least one day prior to the date that a first Office action (which may be an Office action containing only a restriction requirement) appears in the Patent Application Information Retrieval (PAIR) system. Applicant may check the status of the application using PAIR.

(6) The petition to make special must be accompanied by a request for early publication in compliance with 37 CFR 1.219 and the publication fee set forth in 37 CFR 1.18(d).

Privacy Act Statement

The **Privacy Act of 1974 (P.L. 93-579)** requires that you be given certain information in connection with your submission of the attached form related to a patent application or patent. Accordingly, pursuant to the requirements of the Act, please be advised that: (1) the general authority for the collection of this information is 35 U.S.C. 2(b)(2); (2) furnishing of the information solicited is voluntary; and (3) the principal purpose for which the information is used by the U.S. Patent and Trademark Office is to process and/or examine your submission related to a patent application or patent. If you do not furnish the requested information, the U.S. Patent and Trademark Office may not be able to process and/or examine your submission, which may result in termination of proceedings or abandonment of the application or expiration of the patent.

The information provided by you in this form will be subject to the following routine uses:

1. The information on this form will be treated confidentially to the extent allowed under the Freedom of Information Act (5 U.S.C. 552) and the Privacy Act (5 U.S.C 552a). Records from this system of records may be disclosed to the Department of Justice to determine whether disclosure of these records is required by the Freedom of Information Act.
2. A record from this system of records may be disclosed, as a routine use, in the course of presenting evidence to a court, magistrate, or administrative tribunal, including disclosures to opposing counsel in the course of settlement negotiations.
3. A record in this system of records may be disclosed, as a routine use, to a Member of Congress submitting a request involving an individual, to whom the record pertains, when the individual has requested assistance from the Member with respect to the subject matter of the record.
4. A record in this system of records may be disclosed, as a routine use, to a contractor of the Agency having need for the information in order to perform a contract. Recipients of information shall be required to comply with the requirements of the Privacy Act of 1974, as amended, pursuant to 5 U.S.C. 552a(m).
5. A record related to an International Application filed under the Patent Cooperation Treaty in this system of records may be disclosed, as a routine use, to the International Bureau of the World Intellectual Property Organization, pursuant to the Patent Cooperation Treaty.
6. A record in this system of records may be disclosed, as a routine use, to another federal agency for purposes of National Security review (35 U.S.C. 181) and for review pursuant to the Atomic Energy Act (42 U.S.C. 218(c)).
7. A record from this system of records may be disclosed, as a routine use, to the Administrator, General Services, or his/her designee, during an inspection of records conducted by GSA as part of that agency's responsibility to recommend improvements in records management practices and programs, under authority of 44 U.S.C. 2904 and 2906. Such disclosure shall be made in accordance with the GSA regulations governing inspection of records for this purpose, and any other relevant (*i.e.*, GSA or Commerce) directive. Such disclosure shall not be used to make determinations about individuals.
8. A record from this system of records may be disclosed, as a routine use, to the public after either publication of the application pursuant to 35 U.S.C. 122(b) or issuance of a patent pursuant to 35 U.S.C. 151. Further, a record may be disclosed, subject to the limitations of 37 CFR 1.14, as a routine use, to the public if the record was filed in an application which became abandoned or in which the proceedings were terminated and which application is referenced by either a published application, an application open to public inspection or an issued patent.
9. A record from this system of records may be disclosed, as a routine use, to a Federal, State, or local law enforcement agency, if the USPTO becomes aware of a violation or potential violation of law or regulation.

UNITED STATES PATENT AND TRADEMARK OFFICE

UNITED STATES DEPARTMENT OF COMMERCE
United States Patent and Trademark Office
Address: COMMISSIONER FOR PATENTS
P.O. Box 1450
Alexandria, Virginia 22313-1450
www.uspto.gov

APPLICATION NO.	FILING DATE	FIRST NAMED INVENTOR	ATTORNEY DOCKET NO.	CONFIRMATION NO.
12/621,191	11/18/2009	Andrew J. Devitt	DEV3-PT001	1980

3624 7590 11/29/2011

VOLPE AND KOENIG, P.C.
UNITED PLAZA
30 SOUTH 17TH STREET
PHILADELPHIA, PA 19103

EXAMINER	
WAKS, JOSEPH	

ART UNIT	PAPER NUMBER
2839	

NOTIFICATION DATE	DELIVERY MODE
11/29/2011	ELECTRONIC

Please find below and/or attached an Office communication concerning this application or proceeding.

The time period for reply, if any, is set in the attached communication.

Notice of the Office communication was sent electronically on above-indicated "Notification Date" to the following e-mail address(es):

eoffice@volpe-koenig.com

UNITED STATES PATENT AND TRADEMARK OFFICE

Commissioner for Patents
United States Patent and Trademark Office
P.O. Box 1450
Alexandria, VA 22313-1450
www.uspto.gov

VOLPE AND KOENIG, P.C.
UNITED PLAZA
30 SOUTH 17TH STREET
PHILADELPHIA PA 19103

In re Application of	:	
DEVITT, Andrew J.	:	DECISION ON PETITION
Application No. 12/621,191	:	TO MAKE SPECIAL UNDER
Filed: June 1, 2011	:	THE GREEN TECHNOLOGY
Attorney Docket No. DEV3-PT001	:	PILOT PROGRAM

This is a decision on the petition under 37 CFR 1.102, filed on November 7, 2011, to make the above-identified application special under the pilot program for applications pertaining to Green Technologies as set forth 74 Federal Register Notice 64666 (December 8, 2009) and amended by 75 Federal Register Notice 28554 (May 21, 2010) and 75 Federal Register Notice 69049 (November 10, 2010).

The petition is **GRANTED**.

A grantable petition to make an application special under 37 CFR 1.102 and the pilot program as set forth in 74 FR 64666 must be directed to a nonprovisional application filed under 35 USC 111(a) or be a national stage entry under 35 USC 371, exclusive of any reissue applications.

In order to qualify for special status, the following requirements must be met. 1) The application must have no more than 3 independent claims and no more than 20 total claims. 2) The application must not contain any multiple dependent claims. 3) The petition must state the basis for seeking special status, i.e., the claimed invention either: A) materially enhances the quality of the environment or B) materially contributes to: i) the discovery or development of renewable energy resources, ii) the more efficient utilization and conservation of energy resources, or iii) greenhouse gas emission reduction. 4) If the disclosure is not clear on its face that the claimed invention materially contributes under category (A) or (B), the petition must be accompanied by a statement by the applicant, assignee, or an attorney/agent registered to practice before the Office explaining how the materiality standard is met. 5) A statement that applicant will agree to make an election without traverse in a telephonic interview if a restriction requirement is made by the examiner. 6) The petition to make special must be filed electronically. 7) The petition must be filed at least one day prior to the date that a first Office Action appears in the Patent Application Information Retrieval (PAIR) system. 8) The petition must be accompanied by a request for early publication in compliance with 37 CFR 1.219 and include the publication fee as set forth in 37 CFR 1.18(d).

The requirement for a fee for consideration of the petition to make special for applications pertaining to Green Technologies has been waived.

The instant petition complies with items 1 – 8 above. Accordingly, the above-identified application has been accorded "special" status.

Telephone inquires concerning this decision should be directed to Colleen Dunn at 571-272-1170.

The application is being forwarded to the appropriate Technology Center Art Unit for action on the merits commensurate with this decision.

/Colleen Dunn/

Colleen Dunn
TQAS, TC 2800

SPE RESPONSE FOR CERTIFICATE OF CORRECTION

DATE : 03/07/12

TO SPE OF : ART UNIT: 3727 Attn: CARTER MONICA S (SPE)

SUBJECT : Request for Certificate of Correction for Appl. No.: 12/621366 Patent No.: 8105131

CofC mailroom date: 02/16/2012

Please respond to this request for a certificate of correction within 7 days.

FOR IFW FILES:

Please review the requested changes/corrections as shown in the **COCIN** document(s) in the IFW application image. No new matter should be introduced, nor should the scope or meaning of the claims be changed.

Please complete the response (see below) and forward the completed response to scanning using document code **COCX**.

FOR PAPER FILES:

Please review the requested changes/corrections as shown in the attached certificate of correction. Please complete this form (see below) and forward it with the file to:

Certificates of Correction Branch (CofC)
Randolph Square – 9D10-A
Palm Location 7580

Note: Please check Claims on PTO/SB/44 Form
Should these claims be corrected as requested or not

Tasneem Siddiqui
Certificates of Correction Branch
703-756-1814 & 703-756-1593

Thank You For Your Assistance

The request for issuing the above-identified correction(s) is hereby:
Note your decision on the appropriate box.

xApproved	**All** changes apply.
☐ **Approved in Part**	Specify below which changes **do not** apply.
☐ **Denied**	State the reasons for denial below.

Comments: _____

_____

_____

/Monica S. Carter/_____

SPE **Art Unit**

UNITED STATES PATENT AND TRADEMARK OFFICE

Commissioner for Patents
United States Patent and Trademark Office
P.O. Box 1450
Alexandria, VA 22313-1450
www.uspto.gov

BRIAN J. DAIUTO
LAW OFFICE OF BRIAN J. DAIUTO
886 ILIMA COURT
PALO ALTO CA 94306

MAILED

OCT 03 2011

OFFICE OF PETITIONS

In re Application of
Evangelos Karageorgos et al.
Application No. 12/621,368
Filed: November 18, 2009
Attorney Docket No. **SCIG-001-US**

DECISION ON PETITION
TO WITHDRAW
FROM RECORD

This is a decision on the Request to Withdraw as attorney or agent of record under 37 CFR § 1.36(b), filed September 22, 2011.

The request is **NOT APPROVED**.

The request cannot be approved because the requested change in the correspondence address is improper. I would also like to bring to petitioner attention that the attorney cannot withdraw attorneys' by Customer Number when the power of attorney was originally granted individually in the Declaration and Power of Attorney filed November 18, 2009

The Office will only accept correspondence address changes to the most current address information provided for the assignee of the entire interest *who properly became of record under 37 CFR 3.71,* or, if no assignee of the entire interest has properly been made of record, the most current address information provided for the first named inventor. 37 CFR 3.71(c) states:

> ***An assignee becomes of record either in a national patent application or a reexamination proceeding by filing a statement in compliance with § 3.73(b) that is signed by a party who is authorized to act on behalf of the assignee.***

Therefore, as there is currently no Statement under 37 CFR 3.73(b) with the current assignee information of record in the instant application, the Office cannot change the correspondence address to the address on the Request to Withdraw at this present time.

All future communications from the Office will continue to be directed to the above-listed address until otherwise notified by applicant.

Telephone inquires concerning this decision should be directed to JoAnne Burke at 571-272-4584.

JoAnne Burke
Petitions Examiner
Office of Petitions

UNITED STATES PATENT AND TRADEMARK OFFICE

UNITED STATES DEPARTMENT OF COMMERCE
United States Patent and Trademark Office
Address: COMMISSIONER FOR PATENTS
P.O. Box 1450
Alexandria, Virginia 22313-1450
www.uspto.gov

APPLICATION NO.	FILING DATE	FIRST NAMED INVENTOR	ATTORNEY DOCKET NO.	CONFIRMATION NO.
12/621,381	11/18/2009	Akihito Shibahara	KATOSH.040AUS	2340

20995 7590 03/22/2011

KNOBBE MARTENS OLSON & BEAR LLP
2040 MAIN STREET
FOURTEENTH FLOOR
IRVINE, CA 92614

EXAMINER	
LEE, BENJAMIN C	

ART UNIT	PAPER NUMBER
2612	

NOTIFICATION DATE	DELIVERY MODE
03/22/2011	ELECTRONIC

Please find below and/or attached an Office communication concerning this application or proceeding.

The time period for reply, if any, is set in the attached communication.

Notice of the Office communication was sent electronically on above-indicated "Notification Date" to the following e-mail address(es):

jcartee@kmob.com
efiling@kmob.com
eOAPilot@kmob.com

UNITED STATES PATENT AND TRADEMARK OFFICE

Commissioner for Patents
United States Patent and Trademark Office
P.O. Box 1450
Alexandria, VA 22313-1450
www.uspto.gov

KNOBBE MARTENS OLSON & BEAR LLP
2040 MAIN STREET
FOURTEENTH FLOOR
IRVINE CA 92614

In re Application of	:	
SHIBAHARA, AKIHITO	:	DECISION ON REQUEST TO
Application No. 12/621,381	:	PARTICIPATE IN PATENT
Filed: November 18, 2009	:	PROSECUTION HIGHWAY
Attorney Docket No. **KATOSH.040AUS**	:	PROGRAM AND PETITION
	:	TO MAKE SPECIAL UNDER
	:	37 CFR 1.102(a)

This is a decision on the request to participate in the Patent Prosecution Highway (PPH) program and the petition under 37 CFR 1.102(a), filed January 11, 2011 to make the above-identified application special.

The request and petition are **GRANTED**.

A grantable request to participate in the PPH program and petition to make special require:

(1) The U.S. application must validly claim priority under 35 U.S.C. 119(a) to one or more applications filed in the JPO;
(2) Applicant must submit a copy of the allowable/patentable claim(s) from the JPO application(s) along with an English translation thereof and a statement that the English translation is accurate;
(3) All the claims in the U.S. application must sufficiently correspond or be amended to sufficiently correspond to the allowable/patentable claim(s) in the JPO application(s);
(4) Examination of the U.S. application has not begun;
(5) Applicant must submit a copy of all the office actions from each of the JPO application(s) containing the allowable/patentable claim(s) along with an English translation thereof and a statement that the English translation is accurate; and
(6) Applicant must submit an IDS listing the documents cited by the JPO examiner in the JPO office action along with copies of documents except U.S. patents or U.S. patent application publications.

The request to participate in the PPH program and petition comply with the above requirements. Accordingly, the above-identified application has been accorded "special" status.

Telephone inquiries concerning this decision should be directed to Doris To at 571-272-7629.

All other inquiries concerning the examination or status of the application should be directed to Patent Application Information Retrieval (PAIR) system.

The application will be forwarded to the examiner for action on the merits commensurate with this decision.

/Doris To/

Doris To
Quality Assurance Specialist
Technology Center 2600
Communications

UNITED STATES PATENT AND TRADEMARK OFFICE

UNITED STATES DEPARTMENT OF COMMERCE
United States Patent and Trademark Office
Address: COMMISSIONER FOR PATENTS
P.O. Box 1450
Alexandria, Virginia 22313-1450
www.uspto.gov

APPLICATION NO.	FILING DATE	FIRST NAMED INVENTOR	ATTORNEY DOCKET NO.	CONFIRMATION NO.
12/621,387	11/18/2009	Akira TANAKA	SUTOSH.500AUS	2350

20995 7590 11/09/2010

KNOBBE MARTENS OLSON & BEAR LLP
2040 MAIN STREET
FOURTEENTH FLOOR
IRVINE, CA 92614

EXAMINER	
ART UNIT	PAPER NUMBER
2811	

NOTIFICATION DATE	DELIVERY MODE
11/09/2010	ELECTRONIC

Please find below and/or attached an Office communication concerning this application or proceeding.

The time period for reply, if any, is set in the attached communication.

Notice of the Office communication was sent electronically on above-indicated "Notification Date" to the following e-mail address(es):

jcartee@kmob.com
efiling@kmob.com
eOAPilot@kmob.com

UNITED STATES PATENT AND TRADEMARK OFFICE

Commissioner for Patents
United States Patent and Trademark Office
P.O. Box 1450
Alexandria, VA 22313-1450
www.uspto.gov

KNOBBE MARTENS OLSON & BEAR LLP
2040 MAIN STREET
FOURTEENTH FLOOR
IRVINE CA 92614

In re Application of
TANAKA et al.
Application No.: 12/621,387
Filed: 18 November 2009
Attorney Docket No.: SUTOSH.500AUS
For: SEMICONDUCTOR CHIP MOUNTING BODY, METHOD OF MANUFACTURING SEMICONDUCTOR CHIP MOUNTING BODY AND ELECTRONIC DEVICE

: DECISION ON REQUEST TO
: PARTICIPATE IN THE PATENT
: PROSECUTION HIGHWAY
: PROGRAM AND PETITION
: TO MAKE SPECIAL UNDER
: 37 CFR 1.102(d)

This is a decision on the request to participate in the Patent Prosecution Highway (PPH) program and the petition under 37 CFR 1.102(a), filed 23 September 2010, to make the above-identified application special.

The request and petition are **GRANTED**.

Discussion

A grantable request to participate in the PPH pilot program and petition to make special require:

1. The U.S. application is
    a. a Paris Convention application which either
        i. validly claims priority under 35 U.S.C. 119(a) and 37 CFR 1.55 to one or more applications filed in the JPO, or
        ii. validly claims priority to a PCT application that contains no priority claims, or
    b. a national stage application under the PCT (an application which entered the national stage in the U.S. from a PCT international application after compliance with 35 U.S.C. 371), which PCT application
        i. validly claims priority to an application filed in the JPO, or
        ii. validly claims priority to a PCT application that contains no priority claims, or
        iii. contains no priority claim, or
    c. a so-called bypass application filed under 35 U.S.C. 111(a) which validly claims benefit under 35 U.S.C. 120 to a PCT application, which PCT application

i. validly claims priority to an application filed in the JPO, or
ii. validly claims priority to a PCT application that contains no priority claims, or
iii. contains no priority claim;

2. Applicant must submit a copy of:
   a. The allowable/patentable claim(s) from the JPO application(s);
   b. An English translation of the allowable/patentable claim(s) and
   c. A statement that the English translation is accurate;
3. Applicant must:
   a. Ensure all the claims in the U.S. application must sufficiently correspond or be amended to sufficiently correspond to the allowable/patentable claim(s) in the JPO application(s) and
   b. Submit a claims correspondence table in English;
4. Examination of the U.S. application has not begun;
5. Applicant must submit:
   a. Documentation of prior office action:
      i. a copy of the office action(s) just prior to the "Decision to Grant a Patent" from each of the JPO application(s) containing the allowable/patentable claim(s) or
      ii. if the allowable/patentable claims(s) are from a "Notification of Reasons for Refusal" then the Notification of Reasons for Refusal or
      iii. if the JPO application is a first action allowance then no office action from the JPO is necessary should be indicated on the request/petition form;
   b. An English language translation of the JPO Office action from (5)(a)(i)-(ii) above
   c. A statement that the English translation is accurate;
6. Applicant must submit:
   a. An IDS listing the documents cited by the JPO examiner in the JPO office action (unless already submitted in this application)
   b. Copies of the documents except U.S. patents or U.S. patent application publications (unless already submitted in this application);

The request to participate in the PPH pilot program and petition comply with the above requirements. Accordingly, the above-identified application has been accorded "special" status.

Inquiries concerning this decision should be directed to Lee W. Young at 571-272-4549.

All other inquiries concerning the examination or status of the application is accessible in the PAIR system at http://www.uspto.gov/ebc.index.html.

This application will be forwarded to the examiner for action on the merits commensurate with this decision.

Lee W. Young
TQAS
Technology Center 2800

Filed Via EFS

PTO/SB/20PCT-KR (06-10)
Approved for use through 01/31/2012. OMB 0651-0058
U.S. Patent and Trademark Office; U. S. DEPARTMENT OF COMMERCE
Under the Paperwork Reduction Act of 1995, no persons are required to respond to a collection of information unless it displays a valid OMB control number.

REQUEST FOR PARTICIPATION IN THE PATENT COOPERATION TREATY - PATENT PROSECUTION HIGHWAY (PCT-PPH) PILOT PROGRAM BETWEEN THE KOREAN INTELLECTUAL PROPERTY OFFICE (KIPO) AND THE USPTO

Application No:	12/621,410	Filing date:	November 18, 2009
First Named Inventor:	Wu Xu		
Title of the Invention:	ANODES FOR LITHIUM ION BATTERIES		

THIS REQUEST FOR PARTICIPATION IN THE PCT-PPH PILOT PROGRAM ALONG WITH THE REQUIRED DOCUMENTS MUST BE SUBMITTED VIA EFS-WEB. INFORMATION REGARDING EFS-WEB IS AVAILABLE AT HTTP://WWW.USPTO.GOV/EBC/EFS_HELP.HTML

APPLICANT HEREBY REQUESTS PARTICIPATION IN THE PCT-PPH PROGRAM AND PETITIONS TO MAKE THE ABOVE-IDENTIFIED APPLICATION SPECIAL UNDER THE PCT-PPH PROGRAM.

The above-identified application is (1) a national stage entry of the corresponding PCT application, or (2) a national stage entry of another PCT application which claims priority to the corresponding PCT application, or (3) a national application that claims domestic/ foreign priority to the corresponding PCT application, or (4) a national application which forms the basis for the priority claim in the corresponding PCT application, or (5) a continuing application of a U.S. application that satisfies one of (1) to (4) above, or (6) a U.S. application that claims domestic benefit to a U.S. provisional application which forms the basis for the priority claim in the corresponding PCT application.

The corresponding PCT application number(s) is/are: PCT/US2010/057047

The international filing date of the corresponding PCT application(s) is/are: November 17, 2010

I. List of Required Documents:

a. **A copy of the latest international work product (WO/ISA, WO/IPEA, or IPER) in the above–identified corresponding PCT application(s)**

☑ Is attached.

☐ Is not attached because the document is already in the U.S. application.

b. **A copy of all claims which were indicated as having novelty, inventive step and industrial applicability in the above-identified corresponding PCT application(s).**

☑ Is attached.

☐ Is not attached because the document is already in the U.S. application.

c. **English translations of the documents in a. and b. above are attached (if the documents are not in the English language). A statement that the English translation is accurate is attached for the document in b. above.**

This collection of information is required by 35 U.S.C. 119, 37 CFR 1.55, and 37 CFR 1.102(d). The information is required to obtain or retain a benefit by the public, which is to file (and by the USPTO to process) an application. Confidentiality is governed by 35 U.S.C. 122 and 37 CFR 1.11 and 1.14. This collection is estimated to take 2 hours to complete, including gathering, preparing, and submitting the completed application form to the USPTO. Time will vary depending upon the individual case. Any comments on the amount of time you require to complete this form and/or suggestions for reducing this burden should be sent to the Chief Information Officer, U.S. Patent and Trademark Office, U.S. Department of Commerce, P.O. Box 1450, Alexandria, VA 22313-1450. DO NOT SEND FEES OR COMPLETED FORMS TO THIS ADDRESS.

PTO/SB/20PCT-KR (06-10)

Approved for use through 01/31/2012. OMB 0651-0058
U.S.Patent and Trademark Office; U.S. DEPARTMENT OF COMMERCE

Under the Paperwork Reduction Act of 1995, no persons are required to respond to a collection of information unless it displays a valid OMB control number.

REQUEST FOR PARTICIPATION IN THE PCT-PPH PILOT PROGRAM BETWEEN THE KIPO AND THE USPTO

(continued)

Application No.:	12/621,410
First Named Inventor:	Wu Xu

d. **(1) An information disclosure statement listing the documents cited in the international work products (ISR, WO/ISA, WO/IPEA, IPER) of the corresponding PCT application.**

☑ Is attached

☐ Has already been filed in the above-identified U.S. application on _____

(2) Copies of all documents (except) for U.S. patents or U.S. patent application publications)

☑ Are attached.

☐ Have already been filed in the above-identified U.S. application on _____

II. Claims Correspondence Table:

Claims in US Application	Patentable Claims in the corresponding PCT Application	Explanation regarding the correspondence
1	1	Claims are identical
2	2	Claims are identical
3	3	Identical except later-filed PCT claim added multiple dependency
4	4	Identical except later-filed PCT claim added multiple dependency
5	5	Identical except later-filed PCT claim added multiple dependency
6	6	Identical except later-filed PCT claim added multiple dependency
7	7	Identical except later-filed PCT claim added multiple dependency
8	8	Identical except later-filed PCT claim added multiple dependency
9	9	Identical except later-filed PCT claim added multiple dependency
10	10	Identical except later-filed PCT claim added multiple dependency
11	11	Identical except later-filed PCT claim added multiple dependency
12	12	Identical except later-filed PCT claim added multiple dependency
13	13	Identical except later-filed PCT claim added multiple dependency
14	14	Identical except later-filed PCT claim added multiple dependency
15	15	Identical except later-filed PCT claim added multiple dependency
16	16	Identical except later-filed PCT claim added multiple dependency
17	17	US claim is narrower
18	18	Identical except later-filed PCT claim added multiple dependency
19	19	Claims are identical

III. All the claims in the US application sufficiently correspond to the patentable claims in the corresponding PCT application.

Signature	Date 10/6/11
Name (Print/Typed) Lisa M. Caldwell	Registration Number 41,653

PTO/SB/20PCT-KR (06-10)
Approved for use through 01/31/2012. OMB 0651-0058
U.S.Patent and Trademark Office; U.S. DEPARTMENT OF COMMERCE
Under the Paperwork Reduction Act of 1995, no persons are required to respond to a collection of information unless it displays a valid OMB control number.

REQUEST FOR PARTICIPATION IN THE PCT-PPH PILOT PROGRAM BETWEEN THE KIPO AND THE USPTO

(continued)

Application No.:	12/621,410
First Named Inventor:	Wu Xu

d. **(1) An information disclosure statement listing the documents cited in the international work products (ISR, WO/ISA, WO/IPEA, IPER) of the corresponding PCT application.**

☑ Is attached

☐ Has already been filed in the above-identified U.S. application on _____

(2) Copies of all documents (except) for U.S. patents or U.S. patent application publications)

☑ Are attached.

☐ Have already been filed in the above-identified U.S. application on _____

II. Claims Correspondence Table:

Claims in US Application	Patentable Claims in the corresponding PCT Application	Explanation regarding the correspondence
20	20	Identical except later-filed PCT claim added multiple dependency
21	21	Identical except later-filed PCT claim added multiple dependency
22	22	Claims are identical
23	23	Identical except later-filed PCT claim added multiple dependency
24	24	Identical except later-filed PCT claim added multiple dependency
25	25	Claims are identical
26	26	Identical except later-filed PCT claim added multiple dependency
27	28	Claim 27 in the US application is identical to claim 28 in the PCT
28	27	Claim 28 is identical to PCT claim 27 per Preliminary Amendment filed herewith

III. All the claims in the US application sufficiently correspond to the patentable claims in the corresponding PCT application.

Signature	Date 10/6/11
Name (Print/Typed) Lisa M. Caldwell	Registration Number 41,653

Battelle/LMC

PCT/US2010/057047

PATENT COOPERATION TREATY

From the INTERNATIONAL SEARCHING AUTHORITY

To:

GARDNER GILLIAN

KLARQUIST SPARKMAN, LLP ONE WORLD TRADE CENTER, SUITE 1600 121 SW SALMON STREET PORTLAND OR 97204 USA

DOCKETED FOR: 9/27/11
10/27/11 10/27/11
10/27/11

PCT

NOTIFICATION OF TRANSMITTAL OF THE INTERNATIONAL SEARCH REPORT AND THE WRITTEN OPINION OF THE INTERNATIONAL SEARCHING AUTHORITY, OR THE DECLARATION

(PCT Rule 44.1)

	Date of mailing *(day/month/year)* 27 JULY 2011 (27.07.2011)
Applicant's or agent's file reference 23-8369602 INITIALS: TL	**FOR FURTHER ACTION** See paragraphs 1 and 4 below
International application No. **PCT/US2010/057047**	International filing date *(day/month/year)* **17 NOVEMBER 2010 (17.11.2010)**
Applicant **BATTELLE MEMORIAL INSTITUTE et al**	

1. ☒ The applicant is hereby notified that the international search report and the written opinion of the International Searching Authority have been established and are transmitted herewith.

Filing of amendments and statement under Article 19:

The applicant is entitled, if he so wishes, to amend the claims of the international application (see Rule 46):

When? The time limit for filing such amendments is normally two months from the date of transmittal of the international search report.

Where? Directly to the International Bureau of WIPO, 34 chemin des Colombettes 1211 Geneva 20, Switzerland, Facsimile No.: +41 22 338 82 70

For more detailed instructions, see *PCT Applicant's Guide*, International Phase, paragraphs 9.004 . 9.011.

2. ☐ The applicant is hereby notified that no international search report will be established and that the declaration under Article 17(2)(a) to that effect and the written opinion of the International Searching Authority are transmitted herewith.

3. ☐ **With regard to any protest** against payment of (an) additional fee(s) under Rule 40.2, the applicant is notified that:

☐ the protest together with the decision thereon has been transmitted to the International Bureau together with any request to forward the texts of both the protest and the decision thereon to the designated Offices.

☐ no decision has been made yet on the protest; the applicant will be notified as soon as a decision is made.

4. **Reminders**

The applicant may submit comments on an informal basis on the written opinion of the International Searching Authority to the International Bureau. The International Bureau will send a copy of such comments to all designated Offices unless an international preliminary examination report has been or is to be established. Following the expiration of 30 months from the priority date, these comments will also be made available to the public.

Shortly after the expiration of **18 months** from the priority date, the international application will be published by the International Bureau. If the applicant wishes to avoid or postpone publication, a notice of withdrawal of the international application, or of the priority claim, must reach the International Bureau before the completion of the technical preparations for international publication (Rules 90bis.1 and 90bis.3).

Within **19 months** from the priority date, but only in respect of some designated Offices, a demand for international preliminary examination must be filed if the applicant wishes to postpone the entry into the national phase **until 30 months** from the priority date (in some Offices even later); otherwise, the applicant must, **within 20 months** from the priority date, perform the prescribed acts for entry into the national phase before those designated Offices.

In respect of other designated Offices, the time limit of **30 months** (or later) will apply even if no demand is filed within 19months.

For details about the applicable time limits, Office by Office, see www.wipo.int/pct/en/texts/time_limits.html and the PCT Applicant's Guide, National Chapters.

Name and mailing address of the ISA/KR Korean Intellectual Property Office Government Complex-Daejeon, 189 Cheongsa-ro, Seo-gu, Daejeon 302-701, Republic of Korea	Authorized officer COMMISSIONER
Facsimile No. 82-42-472-7140	Telephone No. 82-42-481-8753

Form PCT/ISA/220 (July 2010)

TL

* Attention

Copies of the documents cited in the international search report can be searched in the following Korean Intellectual Property Office English website for three months from the date of mailing of the international search report.

http://www.kipo.go.kr/en/ => PCT Services => PCT Services

ID : PCT international application number
PW : **SFSQOQ0F**

Inquiries related to PCT International Search Report or Written Opinion prepared by KIPO as an International Searching Authority can be answered not only by KIPO but also through IPKC (Intellectual Property Korea Center), located in Vienna, VA, which functions as a PCT Help Desk for PCT applicants.

Homepage: http://www.ipkcenter.com
Email: ipkc@ipkcenter.com
Phone: +1 703 388 1066
Fax: +1 703 388 1084

PATENT COOPERATION TREATY

PCT

INTERNATIONAL SEARCH REPORT

(PCT Article 18 and Rules 43 and 44)

Applicant's or agent's file reference 23-8369602	**FOR FURTHER ACTION**	see Form PCT/ISA/220 as well as, where applicable, item 5 below.
International application No. **PCT/US2010/057047**	International filing date *(day/month/year)* **17 NOVEMBER 2010 (17.11.2010)**	(Earliest) Priority Date *(day/month/year)* 18 NOVEMBER 2009 (18.11.2009)

Applicant

BATTELLE MEMORIAL INSTITUTE et al

This International search report has been prepared by this International Searching Authority and is transmitted to the applicant according to Article 18. A copy is being transmitted to the International Bureau.

This international search report consists of a total of 3 sheets.

☐ It is also accompanied by a copy of each prior art document cited in this report.

1. **Basis of the report**
   a. With regard to the **language**, the international search was carried out on the basis of:
      ☒ the international application in the language in which it was filed
      ☐ a translation of the international application into _____, which is the language of a translation furnished for the purposes of international search (Rules 12.3(a) and 23.1(b))
   b. ☐ This international search report has been established taking into account the **rectification of an obvious mistake** authorized by or notified to this Authority under Rule 91 (Rule 43.6*bis*(a)).
   c. ☐ With regard to any **nucleotide and/or amino acid sequence** disclosed in the international application, see Box No. I.
2. ☐ **Certain claims were found unsearchable** (See Box No. II)
3. ☐ **Unity of invention is lacking** (See Box No. III)
4. With regard to the **title,**
   ☒ the text is approved as submitted by the applicant.
   ☐ the text has been established by this Authority to read as follows:
5. With regard to the **abstract,**
   ☒ the text is approved as submitted by the applicant.
   ☐ the text has been established, according to Rule 38.2, by this Authority as it appears in Box No. IV. The applicant may, within one month from the date of mailing of this international search report, submit comments to this Authority.
6. With regard to the drawings,
   a. the figure of the **drawings** to be published with the abstract is Figure No. 1
      ☐ as suggested by the applicant.
      ☒ as selected by this Authority, because the applicant failed to suggest a figure.
      ☐ as selected by this Authority, because this figure better characterizes the invention.
   b. ☐ none of the figure is to be published with the abstract.

INTERNATIONAL SEARCH REPORT

International application No.
PCT/US2010/057047

A. CLASSIFICATION OF SUBJECT MATTER

H01M 4/04(2006.01)i, H01M 10/0525(2010.01)i, B60L 11/18(2006.01)i, H01M 4/36(2006.01)i, H01M 4/62(2006.01)i

According to International Patent Classification (IPC) or to both national classification and IPC

B. FIELDS SEARCHED

Minimum documentation searched (classification system followed by classification symbols)

H01M 4/04; H01B 1/06; H01M 4/48; H01M 4/66; C01D 15/00; H01M 4/74; H01M 4/62; H01M 4/02; H01M 4/80

Documentation searched other than minimum documentation to the extent that such documents are included in the fields searched

Electronic data base consulted during the international search (name of data base and, where practicable, search terms used)

eKOMPASS(KIPO internal) & Keywords: battery, anode, slurry, substrate precursor, metal oxide, anode active material, pore-forming agent, binder, solvent, tape, removing, reducing, macroporous structure

C. DOCUMENTS CONSIDERED TO BE RELEVANT

Category*	Citation of document, with indication, where appropriate, of the relevant passages	Relevant to claim No.
A	US 05698339A A (KAWAKAMI; SOICHIRO et al.) 16 December 1997 See abstract, col. 1-33, claims 1-87	1-28
A	JP 63-105469 A (SANYO ELECTRIC CO LTD) 10 May 1988 See abstract, pages 1-4, claim 1	1-28
A	US 2004-0131934 A1 (FRANCOIS SUGNAUX et al.) 08 July 2004 See abstract, columns 1-10, claims 1~21	1-28
A	EP 0032291 A1 (YARDNEY ELECTRIC CORPORATION) 22 July 1981 See abstract, pages 5-7, claims 1-2, 5	1-28
A	US 05567401A A (DODDAPANENI; NARAYAN et al.) 22 October 1996 See abstract, col. 2, lines 38-66, claim 1	1-28
A	KR 10-2007-0069306 A (KOREA INSTITUTE OF MACHINERY & MATERIALS) 03 July 2007 See abstract, page 4, examples 1, 6, claims 1-2	1-28

☐ Further documents are listed in the continuation of Box C. ☒ See patent family annex.

* Special categories of cited documents:
"A" document defining the general state of the art which is not considered to be of particular relevance
"E" earlier application or patent but published on or after the international filing date
"L" document which may throw doubts on priority claim(s) or which is cited to establish the publication date of citation or other special reason (as specified)
"O" document referring to an oral disclosure, use, exhibition or other means
"P" document published prior to the international filing date but later than the priority date claimed
"T" later document published after the international filing date or priority date and not in conflict with the application but cited to understand the principle or theory underlying the invention
"X" document of particular relevance; the claimed invention cannot be considered novel or cannot be considered to involve an inventive step when the document is taken alone
"Y" document of particular relevance; the claimed invention cannot be considered to involve an inventive step when the document is combined with one or more other such documents,such combination being obvious to a person skilled in the art
"&" document member of the same patent family

Date of the actual completion of the international search	Date of mailing of the international search report
27 JULY 2011 (27.07.2011)	**27 JULY 2011 (27.07.2011)**

Name and mailing address of the ISA/KR
Korean Intellectual Property Office
Government Complex-Daejeon, 189 Cheongsa-ro, Seo-gu, Daejeon 302-701, Republic of Korea
Facsimile No. 82-42-472-7140

Authorized officer
CHO Jun Bae
Telephone No. 82-42-481-8292

Form PCT/ISA/210 (second sheet) (July 2009)

INTERNATIONAL SEARCH REPORT

Information on patent family members

International application No.
PCT/US2010/057047

Patent document cited in search report	Publication date	Patent family member(s)	Publication date
US 05698339A A	16.12.1997	CA 2161076 A1	22.04.1996
		CA 2161076 C	25.01.2000
		CN 1079587 C	20.02.2002
		CN 1135097 A	06.11.1996
		CN 1135097 C0	05.11.1996
		CN 1172385 C	20.10.2004
		CN 1305235 A0	25.07.2001
		EP 0709907 A1	01.05.1996
		EP 0709907 B1	07.01.1999
		JP 03-717085 B2	16.11.2005
		JP 08-171901 A	02.07.1996
		KR 10-0199080 B1	15.06.1999
JP 63-105469 A	10.05.1988	None	
US 2004-0131934 A1	08.07.2004	AU 2002-242732 B2	19.07.2007
		AU 2002-242732 B2	19.07.2007
		CA 2441125 A1	26.09.2002
		CN 101009368 A	01.08.2007
		CN 101009368 A	01.08.2007
		CN 1290213 C	13.12.2006
		CN 1520620 A	11.08.2004
		CN 1520620 A	11.08.2004
		CN 1520620 C0	13.12.2006
		EP 1244168 A1	25.09.2002
		EP 1374325 A2	02.01.2004
		JP 2004-533702 A	04.11.2004
		JP 2004-533702 T	04.11.2004
		JP 2004-533702 T	04.11.2004
		KR 10-2003-0093252 A	06.12.2003
		KR20030093252A	06.12.2003
		KR20030093252A	06.12.2003
		US 2004-131934 A1	08.07.2004
		WO 02-075826 A2	26.09.2002
		WO 02-075826 A3	26.09.2002
		WO 0207-5826A2	26.09.2002
		WO 0207-5826A3	19.12.2002
		WO 0207-5826A3	19.12.2002
EP 0032291 A1	22.07.1981	CA 1164527 A1	27.03.1984
		IL61539A	31.12.1984
		IN 153206 A1	16.06.1984
		JP 56-103868 A	19.08.1981
US 05567401A A	22.10.1996	None	
KR 10-2007-0069306 A	03.07.2007	None	

PATENT COOPERATION TREATY

From the
INTERNATIONAL SEARCHING AUTHORITY

To:
GARDNER GILLIAN

KLARQUIST SPARKMAN, LLP ONE WORLD TRADE CENTER, SUITE 1600 121 SW SALMON STREET PORTLAND OR 97204 USA

PCT

WRITTEN OPINION OF THE INTERNATIONAL SEARCHING AUTHORITY

(PCT Rule 43bis.1)

Date of mailing *(day/month/year)*	**27 JULY 2011 (27.07.2011)**
Applicant's or agent's file reference 23-8369602	**FOR FURTHER ACTION** See paragraph 2 below

International application No.	International filing date *(day/month/year)*	Priority date *(day/month/year)*
PCT/US2010/057047	**17 NOVEMBER 2010 (17.11.2010)**	18 NOVEMBER 2009 (18.11.2009)

International Patent Classification (IPC) or both national classification and IPC

H01M 4/04(2006.01)i, H01M 10/0525(2010.01)i, B60L 11/18(2006.01)i, H01M 4/36(2006.01)i, H01M 4/62(2006.01)i

Applicant

BATTELLE MEMORIAL INSTITUTE et al

1. This opinion contains indications relating to the following items:

- [x] Box No. I Basis of the opinion
- [ ] Box No. II Priority
- [ ] Box No. III Non-establishment of opinion with regard to novelty, inventive step and industrial applicability
- [ ] Box No. IV Lack of unity of invention
- [x] Box No. V Reasoned statement under Rule 43bis.1(a)(i) with regard to novelty, inventive step or industrial applicability; citations and explanations supporting such statement
- [ ] Box No. VI Certain documents cited
- [x] Box No. VII Certain defects in the international application
- [ ] Box No. VIII Certain observations on the international application

2. **FURTHER ACTION**

If a demand for international preliminary examination is made, this opinion will be considered to be a written opinion of the International Preliminary Examining Authority ("IPEA") except that this does not apply where the applicant chooses an Authority other than this one to be the IPEA and the chosen IPEA has notified the International Bureau under Rule 66.1bis(b) that written opinions of this International Searching Authority will not be so considered.

If this opinion is, as provided above, considered to be a written opinion of the IPEA, the applicant is invited to submit to the IPEA a written reply together, where appropriate, with amendments, before the expiration of 3 months from the date of mailing of Form PCT/ISA/220 or before the expiration of 22 months from the priority date, whichever expires later.
For further options, see Form PCT/ISA/220.

3. For further details, see notes to Form PCT/ISA/220.

Name and mailing address of the ISA/KR	Date of completion of this opinion	Authorized officer
Korean Intellectual Property Office Government Complex-Daejeon, 189 Cheongsa-ro, Seo-gu, Daejeon 302-701, Republic of Korea Facsimile No. 82-42-472-7140	27 JULY 2011 (27.07.2011)	CHO Jun Bae Telephone No.82-42-481-8292

WRITTEN OPINION OF THE INTERNATIONAL SEARCHING AUTHORITY

International application No.
PCT/US2010/057047

Box No. I Basis of this opinion

1. With regard to the **language**, this opinion has been established on the basis of :

   ☒ the international application in the language in which it was filed

   ☐ a translation of the international application into _____, which is the language of a translation furnished for the purposes of international search (Rules 12.3(a) and 23.1(b))

2. ☐ This opinion has been established taking into account the **rectification of an obvious mistake** authorized by or notified to this Authority under Rule 91 (Rule 43*bis*.1(a))

3. With regard to any **nucleotide and/or amino acid sequence** disclosed in the international application, this opinion has been established on the basis of:

   a. a sequence listing filed or furnished
      ☐ on paper
      ☐ in electronic form

   b. time of filing or furnishing
      ☐ contained in the international application as filed.
      ☐ filed together with the international application in electronic form.
      ☐ furnished subsequently to this Authority for the purposes of search.

4. ☐ In addition, in the case that more than one version or copy of a sequence listing has been filed or furnished, the required statements that the information in the subsequent or additioanl copies is identical to that in the application as filed or does not go beyond the application as filed, as appropriate, were furnished.

5. Additional comments:

WRITTEN OPINION OF THE INTERNATIONAL SEARCHING AUTHORITY

International application No.
PCT/US2010/057047

Box No. V Reasoned statement under Rule 43bis.1(a)(i) with regard to novelty, inventive step or industrial applicability; citations and explanations supporting such statement

1. Statement

Novelty (N)	Claims	1-28	YES
	Claims	NONE	NO
Inventive step (IS)	Claims	1-28	YES
	Claims	NONE	NO
Industrial applicability (IA)	Claims	1-28	YES
	Claims	NONE	NO

2. Citations and explanations :

Reference is made to the following documents:

D1: US 05698339A A (KAWAKAMI; SOICHIRO et al.) 16 December 1997
D2: JP 63-105469 A (SANYO ELECTRIC CO LTD) 10 May 1988
D3: US 2004-0131934 A1 (FRANCOIS SUGNAUX et al.) 08 July 2004

I. Novelty

I-1) Concerning claims 1-28

Claims 1, 28 of the present invention are concerned with a method for preparing an anode, comprising: preparing a slurry comprising a substrate precursor, an anode active material, a pore-forming agent, a binder, and solvent; forming a tape from a slurry; removing the pore-forming agent; and reducing the macroporous structure.

Document D1, which is regarded as being the closest prior art to the subject matter of claims 1, 28, discloses a method for manufacturing an anode, comprising: preparing a slurry comprising a metal oxide, an anode active material, a pore-forming agent, a binder, and solvent; coating a slurry on the substrate; removing the pore-forming agent; and sintering the macroporous structure, from which the subject matter of claims 1, 28 differs in that the method comprises the step of preparing an anode slurry including a substrate precursor and the step of reducing the macroporous structure in the reduction environment.

Therefore, the subject matter of claims 1, 28 is novel under PCT Article 33(2).

Claims 2-27 are referring to claim 1. Therefore, the subject matter of claims 2-27 is novel under PCT Article 33(2).

II. Inventive Step

II-1) Concerning claims 1-28

As discussed in the above section I-1), in comparison with the document D1, the subject matter of claims 1, 28 differs in that the method comprises the step of preparing an anode slurry including a substrate precursor, and the step of reducing the macroporous structure in the reduction environment. Although D1 discloses the step of sintering the macroporous structure, the sintering method take place in the oxygen environment. So, in comparison with this invention and D1, the sintering method of D1 for the macroporous structure is fundamentally different from this invention.

(Continued on Supplemental Sheet)

WRITTEN OPINION OF THE
INTERNATIONAL SEARCHING AUTHORITY

International application No.
PCT/US2010/057047

Box No. VII Certain defects in the international application

The following defects in the form or contents of the international application have been noted:

Claims 4, 5, 7~18, 20, 21, 23, 24, 26 are multiple dependent claims and are not drafted in accordance with the second and third sentence of Rule 6.4(a).

Supplemental Box

In case the space in any of the preceding boxes is not sufficient.
Continuation of :

Box. V

And also, although D2 discloses the manufacturing method of nickel substrate in the reduction environment. The method of D2 dose only relate to the manufacturing of method of the nickel substrate, and the method of D2 does not disclose an anode comprising an anode active material. And also, D3 does not disclose: the step of reducing the macroporous structure in the reduction environment; and the step of preparing an anode slurry including a substrate precursor, specifically.

So, it is not obvious to a person skilled in the art from the combination of the documents D1~D3 for the technical feature of the subject matters of claims 1, 28 of this invention.

Therefore, claims 1, 28 meet the criteria set out in PCT Article 33(3).

Claims 2~27 are referring to claim 1. Therefore, claims 2~27 meet the criteria set out in PCT Article 33(3).

III. Industrial Applicability

The subject matter of claims 1~28 is considered to be industrially applicable under PCT Article 33(4).

PCT CLAIMS

Application No. PCT/US2010/057047
Filed November 17, 2010

1. A method for preparing an anode, comprising:

preparing a slurry comprising a substrate precursor, an anode active material, a pore-forming agent, a binder, and a solvent, wherein the substrate precursor is a metal oxide, metal salt, organometallic oxide, metal nitride, or a combination thereof;

forming a tape from the slurry;

removing the pore-forming agent and binder to produce a macroporous structure; and

reducing the macroporous structure such that a significant portion of the substrate precursor is reduced, thereby producing a macroporous composite anode.

2. The method of claim 1, wherein the slurry further comprises a plasticizer, a dispersant, or a combination thereof.

3. The method of claim 1 or claim 2, further comprising sintering the macroporous composite anode.

4. The method of any one of the preceding claims, further comprising preparing a laminate structure from the tape, wherein the laminate structure comprises at least two layers of the tape.

5. The method of any one of the preceding claims, wherein removing the pore-forming agent and binder comprises sintering the tape.

6. The method of claim 5, wherein sintering the tape removes at least 90% of the pore-forming agent and the binder.

7. The method of claim 5 or claim 6, wherein sintering the tape produces a macroporous structure, wherein the macroporous structure is devoid of the pore-forming agent and the binder.

8. The method of any one of claims 5 to 7, wherein sintering the tape produces a macroporous structure having a porosity of 30-60%.

9. The method of any one of claims 5 to 8, wherein the tape is sintered in an oxidizing environment.

10. The method of any one of the preceding claims, wherein reducing the macroporous structure reduces at least 90% of the substrate precursor.

11. The method of any one of the preceding claims, wherein the substrate precursor is completely reduced.

12. The method of any one of the preceding claims, wherein the substrate precursor is copper (I) oxide, copper (II) oxide, nickel (II) oxide or nickel (IV) oxide.

13. The method of any one of the preceding claims, wherein the anode active material is tin, a tin alloy, tin oxide, cobalt oxide, iron oxide, manganese oxide, chromium oxide, vanadium oxide, silicon, silicon oxide, titanium oxide, aluminum, or any combination thereof.

14. The method of any one of the preceding claims, wherein the anode active material has an average particle diameter in the range of 5 nm to 500 nm.

15. The method of any one of the preceding claims, wherein the macroporous composite anode comprises 2 wt% to 30 wt% active anode material.

16. The method of any one of the preceding claims, wherein the pore-forming agent is carbon black, graphite, polymer beads, starch, or a mixture thereof.

17. The method of any one of the preceding claims, wherein the binder is poly(vinylbutyral), ethyl cellulose, or a combination thereof.

18. The method of any one of claims 1-10 or 12-17, wherein reducing the macroporous structure comprises heating the macroporous structure in a reducing atmosphere at a temperature and for a period of time such that at least 90% of the substrate precursor is reduced.

19. The method of claim 18, wherein the temperature and the period of time are selected such that the substrate precursor is completely reduced.

20. The method of claim 18 or claim 19, wherein the reducing atmosphere comprises H_2, CO, CH_4, or a mixture thereof.

21. The method of any one of claims 18 to 20, wherein the macroporous structure is heated in the reducing atmosphere at a temperature and for a period of time such that at least a portion of the anode active material is reduced.

22. The method of claim 21, wherein the macroporous structure is heated in the reducing atmosphere at a temperature and for a period of time such that the anode active material is completely reduced.

23. The method of any one of claims 18 to 22, wherein the temperature and period of time are selected such that the macroporous structure is concurrently reduced and sintered.

24. The method of any one of the preceding claims, further comprising sintering the macroporous composite anode after reducing the macroporous structure.

25. The method of claim 24, wherein the macroporous composite anode is sintered in a nitrogen or nitrogen/hydrogen atmosphere.

26. The method of any one of the preceding claims, further comprising placing the macroporous composite anode in a cell.

27. The method of claim 1, wherein the substrate precursor is a metal oxide comprising copper (II) oxide or nickel (II) oxide, b) the anode active material comprises tin, a tin alloy, tin oxide, cobalt oxide, iron oxide, manganese oxide, chromium oxide, vanadium oxide, silicon, silicon oxide, titanium oxide, aluminum, or any combination thereof, c) the pore-forming agent comprises carbon black, graphite, starch, polymer beads, or a mixture thereof, and d) the binder comprises poly(vinylbutyral), ethylcellulose, or a mixture thereof, the slurry further comprising e) a dispersant, f) a plasticizer comprising benzyl butyl phthalate, poly(ethylene glycol), dibutyl phthalate, or a mixture thereof, and g) a solvent comprising lower alkyl ketones, lower alkyl alcohols, or a mixture thereof, the method further comprising:

preparing a laminate structure from the tape, wherein the laminate structure comprises at least two layers of the tape;

sintering the laminate structure to remove the pore-forming agent and binder and produce a macroporous structure devoid of the pore-forming agent and the binder; and

reducing the macroporous structure in a reducing atmosphere at a temperature and for a period of time such that the substrate precursor is reduced, thereby producing the macroporous composite anode.

28. A method for preparing an anode, comprising:

preparing a slurry comprising a substrate metal, an anode active material, a pore-forming agent, a binder, and a solvent;

forming a tape from the slurry; and

sintering the tape in an oxygen-free atmosphere to produce a macroporous composite anode, wherein sintering the tape removes the pore-forming agent, the binder, and the solvent.

UNITED STATES PATENT AND TRADEMARK OFFICE

Commissioner for Patents
United States Patent and Trademark Office
P.O. Box 1450

MAILED

DEC 21 2011

OFFICE OF PETITIONS

KLARQUIST SPARKMAN, LLP
121 SW SALMON STREET, SUITE 1600
ONE WORLD TRADE CENTER
PORTLAND OR 97204

In re Application of : DECISION ON REQUEST TO
Xu WU et al. : PARTICIPATE IN PCT-PPH PROGRAM
Application No. 12/621,410 : AND PETITION TO MAKE SPECIAL
Filed: November 19, 2009 : UNDER 37 CFR 1.102(a)
Atty. Docket No.: 23-83696-01 :
For: ANODES FOR LITHIUM ION BATTERIES

This is a decision on the request to participate in the PCT Patent Prosecution Highway (PCT-PPH) program and the petition under 37 CFR 1.102(a), filed October 6, 2011, to make the above-identified application special.

The request is **GRANTED**.

A grantable request to participate in the PCT –PPH program and petition to make special under 37 CFR 1.102(a) require:

(1) the U.S. application must have an eligible relationship to one or more PCT application where the ISA or IPEA are the JPO, EPO, KIPO, IPAU, Russia, Spain, Finland, Austria, or USPTO;

(2) at least one claim in the PCT application has novelty, inventive step, and industrial applicability and must be free of any observations in Box VIII in the latest work product in the international stage or applicant must identify and explain why the claim(s) is/are not subject to the observation in Box VIII;

(3) applicant must submit a copy of the claim(s) from the PCT application(s) that have novelty, inventive step, and industrial applicability along with an English translation thereof and a statement that the English translation is accurate, if the claims are not in the English language;

(4) all the claims in the U.S. application must sufficiently correspond or be amended to sufficiently correspond to the claim(s) that have novelty, inventive step, and industrial applicability in the PCT application(s);

(5) examination of the U.S. application has not begun;

(6) applicant must submit a copy of the latest international work product from the PCT application indicating that the claim(s) have novelty, inventive step, and industrial applicability along with an English translation thereof;

(7) applicant must submit an IDS listing the documents cited by the PCT examiner in the international work product along with copies of documents except U.S. patents or U.S. patent application publications; and

(8) applicant is required to submit a claims correspondence table in English which indicates how all the claims in the U.S. application correspond to the claims indicated as having novelty, inventive step, and industrial applicability in the latest international work product.

The request to participate in the PCT-PPH program and petition comply with the above requirements. Accordingly, the above-identified application has been accorded "special" status.

Telephone inquiries concerning this decision should be directed to Robert DeWitty, Petitions Attorney, Office of Petitions (571-272-8427). All other inquiries concerning the examination or status of the application is accessible in the PAIR system at http://www.uspto.gov/ebc.index.html.

This application will be forwarded to Technology Center Art Unit 1727 for action on the merits commensurate with this decision once the application's formality reviews have been completed.

David Bucei
Petitions Examiner
Office of Petitions

Doc Code: PET.GREEN
Document Description: Petition for Green Tech Pilot

PTO/SB/420 (03-11)

PETITION TO MAKE SPECIAL UNDER THE GREEN TECHNOLOGY PILOT PROGRAM

Attorney Docket Number: 234954-1	Application Number (if known): 12/621,559	Filing date: 11-19-2009

First Named Inventor: Eric K. WATSON

Title: STANDY POWER REDUCTION

APPLICANT HEREBY REQUESTS TO PARTICIPATE IN THE GREEN TECHNOLOGY PILOT PROGRAM FOR THE ABOVE-IDENTIFIED APPLICATION. See Instruction Sheet on page 2.

This petition must be timely filed electronically using the USPTO electronic filing system, EFS-Web.

1. By filing this petition:

   Applicant is requesting early publication: Applicant hereby requests early publication under 37 CFR 1.219 and the publication fee set forth in 37 CFR 1.18(d) accompanies this request.

2. By filing this petition: applicant is agreeing to make an election without traverse in a telephonic interview and elect an invention that meets the eligibility requirements for the Green Technology Pilot Program, if the Office determines that the claims are not obviously directed to a single invention. See Instruction Sheet.

3. This request is accompanied by statements of special status for the eligibility requirement.

4. The application contains no more than three (3) independent claims and twenty (20) total claims.

5. The application does not contain any multiple dependent claims.

6. Other attachments: Statement Concerning the Basis for the Special Status

Signature /Allison W. Mages/	Date 12/20/11
Name (Print/Typed) Allison W. Mages	Registration Number 57,275

Note: Signatures of all the inventors or assignees of record of the entire interest or their representative(s) are required in accordance with 37 CFR 1.33 and 11.18. Please see 37 CFR 1.4(d) for the form of the signature. If necessary, submit multiple forms for more than one signature, see below.*

☐ *Total of _____ forms are submitted.

If you need assistance in completing the form, call 1-800-PTO-9199 and select option 2.

IN THE UNITED STATES PATENT AND TRADEMARK OFFICE

First Named Inventor: Eric K. WATSON	)
Confirmation No.: 2696	)
	)
Serial No.: 12/621559	)
	)
Filing Date: 11-19-2009	)
	)
Atty Docket No.: 234954-1	)

VIA EFS
Commissioner for Patents
P.O. Box 1450
Alexandria, VA 22313-1450

Statement Concerning the Basis for the Special Status

SIR:

The present invention generally relates to energy conservation in appliances, and more particularly to reducing power draw of a device, such as an appliance, when in a standby or power-saving state. (See [0001])

The standby power state, also referred to as sleep or idle state, generally refers to a low power consumption condition for electrical and electronic devices such as applicance and computers. In a typical standby power state, certain components and/or functions of the device are put to "sleep" or idled, so as to reduce power consumption. These reduced power conditions can have a significant effect on electrical consumption and cost compared to leaving a device fully on and idle, or not actively used. (See [0002])

However, even in the typical standby state, an appliance still consumes a certain amount of electricity or power. This power loss can be significant, when considered in terms of the number of appliances in use. In some cases, when an

appliance is not being used for its primary purpose, there is no need for the appliance to consume any power at all. It would be advantageous to be able to determine when an appliance is in a condition in which it does not need to consume power and effectively further reduce or eliminate the power draw of the appliance in that state. Accordingly, it would be desirable to provide a system that addresses at least some of the problems identified above. (See [0003]-[0004])

One aspect of the exemplary embodiments relates to a standby power system for an appliance having a power input coupled to a main power source. The system includes a power enabling device coupled between the main power source and power input of the appliance, a standby power state sensing device coupled to the power enabling device, and a power restore device coupled to the power enabling device. (See [0006])

Another aspect of the exemplary embodiments relates to a power control system for an appliance. The system includes a power input to the appliance, an external source of electrical power, a power enabling device coupled between the external source of electrical power and the power input to the appliance, and a standby state sensing device coupled to the power enabling device configured to detect an existence of a standby state trigger and transmit a standby state activation signal to the power enabling device. (See [0007])

The aspects of the disclosed embodiments will reduce or eliminate the power consumption of an appliance or other equipment when in the "standby power state." In one embodiment the system automatically disconnects the main

power feed from the electronics or electrical components of the appliance. This results in a zero power draw situation. The main power feed can automatically reconnected when desired by activation of a sensing mechanism or realizing a pre-determined condition. In addition, a standby power source can be utilized to provide a certain amount of power in order to keep essential components active when all or some of the components of the appliance are disconnected from the main power source. This reduces the standby state power draw of the appliance. (See [0042])

Therefore, Applicant respectfully submits that Special Status is sought on the basis that the present invention materially contributes to the more efficient utilization and conservation of energy resources.

The undersigned representative may be contacted at the number below to facilitate the resolution of any matters. Please charge any fees that are incurred in connection with this Statement to deposit account no. 09-0470.

Respectfully submitted,

General Electric Company

By : /Allison W. Mages/
Allison W. Mages
Reg. No. 57,275

Dated: December 20, 2011

GE Global Patent Operation
2 Corporate Drive, Suite 648
Shelton, CT 06484
203-944-6730

UNITED STATES PATENT AND TRADEMARK OFFICE

UNITED STATES DEPARTMENT OF COMMERCE
United States Patent and Trademark Office
Address: COMMISSIONER FOR PATENTS
P.O. Box 1450
Alexandria, Virginia 22313-1450
www.uspto.gov

APPLICATION NO.	FILING DATE	FIRST NAMED INVENTOR	ATTORNEY DOCKET NO.	CONFIRMATION NO.
12/621,559	11/19/2009	Eric K. Watson	234954-1	2696

52082 7590 01/25/2012

General Electric Company
GE Global Patent Operation
2 Corporate Drive, Suite 648
Shelton, CT 06484

EXAMINER	
RUTLAND WALLIS, MICHAEL	
ART UNIT	PAPER NUMBER
2836	

NOTIFICATION DATE	DELIVERY MODE
01/25/2012	ELECTRONIC

Please find below and/or attached an Office communication concerning this application or proceeding.

The time period for reply, if any, is set in the attached communication.

Notice of the Office communication was sent electronically on above-indicated "Notification Date" to the following e-mail address(es):

gpo.mail@ge.com
allyson.camaroli@ge.com

UNITED STATES PATENT AND TRADEMARK OFFICE

Commissioner for Patents
United States Patent and Trademark Office
P.O. Box 1450
Alexandria, VA 22313-1450
www.uspto.gov

General Electric Company
GE Global Patent Operation
2 Corporate Drive, Suite 648
Shelton CT 06484

JAN 25 2012

In re Application of	:	
WATSON et al.	:	DECISION ON PETITION
Application No. 12/621,559	:	TO MAKE SPECIAL UNDER
Filed: November 19, 2009	:	THE GREEN TECHNOLOGY
Attorney Docket No. 234954-1	:	PILOT PROGRAM

This is a decision on the petition under 37 CFR 1.102, filed on December 20, 2011, to make the above-identified application special under the pilot program for applications pertaining to Green Technologies as set forth 74 Federal Register Notice 64666 (December 8, 2009) and amended by 75 Federal Register Notice 28554 (May 21, 2010) and 75 Federal Register Notice 69049 (November 10, 2010).

The petition is **GRANTED**.

A grantable petition to make an application special under 37 CFR 1.102 and the pilot program as set forth in 74 FR 64666 must be directed to a nonprovisional application filed under 35 USC 111(a) or be a national stage entry under 35 USC 371, exclusive of any reissue applications.

In order to qualify for special status, the following requirements must be met. 1) The application must have no more than 3 independent claims and no more than 20 total claims. 2) The application must not contain any multiple dependent claims. 3) The petition must state the basis for seeking special status, i.e., the claimed invention either: A) materially enhances the quality of the environment or B) materially contributes to: i) the discovery or development of renewable energy resources, ii) the more efficient utilization and conservation of energy resources, or iii) greenhouse gas emission reduction. 4) If the disclosure is not clear on its face that the claimed invention materially contributes under category (A) or (B), the petition must be accompanied by a statement by the applicant, assignee, or an attorney/agent registered to practice before the Office explaining how the materiality standard is met. 5) A statement that applicant will agree to make an election without traverse in a telephonic interview if a restriction requirement is made by the examiner. 6) The petition to make special must be filed electronically. 7) The petition must be filed at least one day prior to the date that a first Office Action appears in the Patent Application Information Retrieval (PAIR) system. 8) The petition must be accompanied by a request for early publication in compliance with 37 CFR 1.219 and include the publication fee as set forth in 37 CFR 1.18(d).

The requirement for a fee for consideration of the petition to make special for applications pertaining to Green Technologies has been waived.

The instant petition complies with items 1 – 8 above. Accordingly, the above-identified application has been accorded "special" status.

Telephone inquires concerning this decision should be directed to Colleen Dunn at 571-272-1170.

The application is being forwarded to the appropriate Technology Center Art Unit for action on the merits commensurate with this decision.

/Colleen Dunn/

Colleen Dunn
TQAS, TC 2800

UNITED STATES PATENT AND TRADEMARK OFFICE

UNITED STATES DEPARTMENT OF COMMERCE
United States Patent and Trademark Office
Address: COMMISSIONER FOR PATENTS
P.O. Box 1450
Alexandria, Virginia 22313-1450
www.uspto.gov

APPLICATION NO.	FILING DATE	FIRST NAMED INVENTOR	ATTORNEY DOCKET NO.	CONFIRMATION NO.
12/621,585	11/19/2009	SUBRAMANIAM SABESAN	CL4119USNA	2734

23906 7590 11/08/2010

E I DU PONT DE NEMOURS AND COMPANY
LEGAL PATENT RECORDS CENTER
BARLEY MILL PLAZA 25/1122B
4417 LANCASTER PIKE
WILMINGTON, DE 19805

EXAMINER	
ART UNIT	PAPER NUMBER
1632	

NOTIFICATION DATE	DELIVERY MODE
11/08/2010	ELECTRONIC

Please find below and/or attached an Office communication concerning this application or proceeding.

The time period for reply, if any, is set in the attached communication.

Notice of the Office communication was sent electronically on above-indicated "Notification Date" to the following e-mail address(es):

PTO-Legal.PRC@usa.dupont.com

UNITED STATES PATENT AND TRADEMARK OFFICE

Commissioner for Patents
United States Patent and Trademark Office
P.O. Box 1450
Alexandria, VA 22313-1450
www.uspto.gov

E I DU PONT DE NEMOURS AND COMPANY
LEGAL PATENT RECORDS CENTER
BARLEY MILL PLAZA 25/1122B
4417 LANCASTER PIKE
WILMINGTON DE 19805

NOV 0 8 2010

In re Application of :
SABESAN, SUBRAMANIAM :
Application No. 12/621,585 :
Filed: November 19, 2009 :
Attorney Docket No. CL4119USNA :

DECISION ON REQUEST TO PARTICIPATE IN PCT-PATENT PROSECUTION HIGHWAY PILOT PROGRAM AND PETITION TO MAKE SPECIAL UNDER 37 CFR 1.102(d)

This is a decision on the request to participate in the PCT-Patent Prosecution Highway (PPH) Pilot program and the petition under 37 CFR 1.102(d), filed June 24, 2010, to make the above-identified application special.

The request and petition are **GRANTED**.

A grantable request to participate in the PCT- PPH Pilot program and petition to make special require:

(1) The U.S. application is a national stage entry of the corresponding EPO PCT application;
(2) The latest work product in the international phase of the PCT application corresponding to the US application, namely the WO/ISA, or the WO/IPEA, or the IPER, indicates at least one claim in the PCT claim has novelty, inventive step and industrial applicability.
(3) Applicant must submit a copy of the allowable/patentable claim(s) from the corresponding PCT application(s);
(4) All the claims in the U.S. application must sufficiently correspond or be amended to sufficiently correspond to the allowable/patentable claim(s) in the PCT application;
(5) Examination of the U.S. application has not begun;
(6) Unless already filed in the U.S. application for which participation in the PCT-PPH pilot program is requested, applicant must submit a copy of the latest international work product, WO/ISA, or WO/IPEA or IPER, which indicated that the claim(s) has/have novelty, inventive step and industrial applicability along with an English translation thereof; and
(7) Applicant must submit an IDS listing the documents cited international work product, WO/ISA, or WO/IPEA or IPER along with copies of documents except U.S. patents or U.S. patent application publications.

The request to participate in the PCT-PPH Pilot program and petition comply with the above requirements. Accordingly, the above-identified application has been accorded "special" status.

Telephone inquiries concerning this decision should be directed to Ram R. Shukla at 571-272-0735.

All other inquiries concerning the examination or status of the application should be directed to Patent Application Information Retrieval (PAIR) system at the http://www.uspto.gov/ebc/index.html.

The application is undergoing pre-examination processing. Once it is released for examination, the application will be forwarded to the examiner for action on the merits commensurate with this decision.

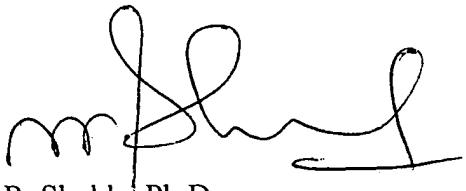

Ram R. Shukla, Ph.D.
Supervisory Patent Examiner
TC 1600

RAM R. SHUKLA, PH.D.
SUPERVISORY PATENT EXAMINER